AUTHENTICATED
U.S. GOVERNMENT
INFORMATION
GPO

Federal Register

12–27–01 Thursday
Vol. 66 No. 248 Dec. 27, 2001
Pages 66705–67068

The **FEDERAL REGISTER** is published daily, Monday through Friday, except official holidays, by the Office of the Federal Register, National Archives and Records Administration, Washington, DC 20408, under the Federal Register Act (44 U.S.C. Ch. 15) and the regulations of the Administrative Committee of the Federal Register (1 CFR Ch. I). The Superintendent of Documents, U.S. Government Printing Office, Washington, DC 20402 is the exclusive distributor of the official edition.

The **Federal Register** provides a uniform system for making available to the public regulations and legal notices issued by Federal agencies. These include Presidential proclamations and Executive Orders, Federal agency documents having general applicability and legal effect, documents required to be published by act of Congress, and other Federal agency documents of public interest.

Documents are on file for public inspection in the Office of the Federal Register the day before they are published, unless the issuing agency requests earlier filing. For a list of documents currently on file for public inspection, see http://www.nara.gov/fedreg.

The seal of the National Archives and Records Administration authenticates the Federal Register as the official serial publication established under the Federal Register Act. Under 44 U.S.C. 1507, the contents of the **Federal Register** shall be judicially noticed.

The **Federal Register** is published in paper and on 24x microfiche. It is also available online at no charge as one of the databases on GPO Access, a service of the U.S. Government Printing Office.

The online edition of the **Federal Register** is issued under the authority of the Administrative Committee of the Federal Register as the official legal equivalent of the paper and microfiche editions (44 U.S.C. 4101 and 1 CFR 5.10). It is updated by 6 a.m. each day the **Federal Register** is published and it includes both text and graphics from Volume 59, Number 1 (January 2, 1994) forward.

GPO Access users can choose to retrieve online **Federal Register** documents as TEXT (ASCII text, graphics omitted), PDF (Adobe Portable Document Format, including full text and all graphics), or SUMMARY (abbreviated text) files. Users should carefully check retrieved material to ensure that documents were properly downloaded.

On the World Wide Web, connect to the **Federal Register** at http://www.access.gpo.gov/nara. Those without World Wide Web access can also connect with a local WAIS client, by Telnet to swais.access.gpo.gov, or by dialing (202) 512-1661 with a computer and modem. When using Telnet or modem, type swais, then log in as guest with no password.

For more information about GPO Access, contact the GPO Access User Support Team by E-mail at gpoaccess@gpo.gov; by fax at (202) 512–1262; or call (202) 512–1530 or 1–888–293–6498 (toll free) between 7 a.m. and 5 p.m. Eastern time, Monday–Friday, except Federal holidays.

The annual subscription price for the **Federal Register** paper edition is $699, or $764 for a combined **Federal Register, Federal Register** Index and List of CFR Sections Affected (LSA) subscription; the microfiche edition of the **Federal Register** including the **Federal Register** Index and LSA is $264. Six month subscriptions are available for one-half the annual rate. The charge for individual copies in paper form is $10.00 for each issue, or $10.00 for each group of pages as actually bound; or $2.00 for each issue in microfiche form. All prices include regular domestic postage and handling. International customers please add 25% for foreign handling. Remit check or money order, made payable to the Superintendent of Documents, or charge to your GPO Deposit Account, VISA, MasterCard or Discover. Mail to: New Orders, Superintendent of Documents, P.O. Box 371954, Pittsburgh, PA 15250–7954.

There are no restrictions on the republication of material appearing in the **Federal Register.**

How To Cite This Publication: Use the volume number and the page number. Example: 66 FR 12345.

SUBSCRIPTIONS AND COPIES

PUBLIC	
Subscriptions:	
Paper or fiche	**202–512–1800**
Assistance with public subscriptions	**512–1806**
General online information	**202–512–1530; 1–888–293–6498**
Single copies/back copies:	
Paper or fiche	**512–1800**
Assistance with public single copies	**512–1803**
FEDERAL AGENCIES	
Subscriptions:	
Paper or fiche	**523–5243**
Assistance with Federal agency subscriptions	**523–5243**

What's NEW!

Federal Register Table of Contents via e-mail

Subscribe to FEDREGTOC, to receive the **Federal Register** Table of Contents in your e-mail every day.

If you get the HTML version, you can click directly to any document in the issue.

To subscribe, go to **http://listserv.access.gpo.gov** and select:

Online mailing list archives
FEDREGTOC-L
Join or leave the list

Then follow the instructions.

Printed on recycled paper.

Contents

Federal Register

Vol. 66, No. 248

Thursday, December 27, 2001

Agricultural Marketing Service
RULES
Egg, poultry, and rabbit products; inspection and grading:
Fees and charges increase, 66712–66714

Agriculture Department
See Agricultural Marketing Service
See Forest Service
See Natural Resources Conservation Service

Amtrak Reform Council
NOTICES
Meetings, 66871–66872

Centers for Disease Control and Prevention
NOTICES
Meetings:
Public Health Service Activities and Research at DOE Sites Citizens Advisory Committee, 66902–66903

Centers for Medicare & Medicaid Services
NOTICES
Privacy Act:
Systems of records, 66903–66909

Children and Families Administration
NOTICES
Agency information collection activities:
Submission for OMB review; comment request, 66910

Civil Rights Commission
NOTICES
Meetings; Sunshine Act, 66872

Coast Guard
RULES
Anchorage regulations and ports and waterways safety:
Lake Michigan—
Chicago Harbor, IL; safety zone, 66747–66749
Navy Pier, Chicago Harbor, IL; security zone, 66749–66751
Drawbridge operations:
Iowa and Illinois, 66751–66753
Ports and waterways safety:
Chesapeake Bay and Hampton Roads, VA; regulated navigation area, 66753–66755
PROPOSED RULES
Drawbridge operations:
Illinois, 66865–66867

Commerce Department
See International Trade Administration
See National Institute of Standards and Technology
See National Oceanic and Atmospheric Administration
See Technology Administration

Commission of Fine Arts
NOTICES
Grants and cooperative agreements; availability, etc.:
National Capital Arts and Cultural Affairs Program, 66889
Meetings, 66889

Comptroller of the Currency
NOTICES
Agency information collection activities:
Submission for OMB review; comment request, 66978–66979

Corporation for National and Community Service
NOTICES
Grants and cooperative agreements; availability, etc.:
AmeriCorps* VISTA financial asset development projects; correction, 66889–66890

Defense Department
RULES
Federal Acquisition Regulation (FAR):
Contractor responsibility, labor relations costs, and costs relating to legal and other proceedings, 66984–66986
Revocation, 66986–66990
Introduction, 66983–66984
Small entity compliance guide, 66990–66991

Defense Nuclear Facilities Safety Board
RULES
Testimony by agency employees and production of official records in legal proceedings, 66714–66718

Drug Enforcement Administration
NOTICES
Agency information collection activities:
Submission for OMB review; comment request, 66936–66939
Applications, hearings, determinations, etc.:
Chattem Chemicals, Inc., 66939

Employment and Training Administration
NOTICES
Agency information collection activities:
Proposed collection; comment request, 66941–66943

Energy Department
See Federal Energy Regulatory Commission
NOTICES
Grants and cooperative agreements; availability, etc.:
Albert Einstein Distinguished Educator Fellowship Program, 66890
Microbial Genome Program and Genomes to Life Program, 66891–66893

Environmental Protection Agency
RULES
Air programs:
Fuels and fuel additives—
California gasoline; enforcement exemptions; CFR correction, 66769
Air quality implementation plans; approval and promulgation; various States:
California
CFR correction, 66769
Pesticides; tolerances in food, animal feeds, and raw agricultural commodities:
Halosulfuron-methyl, 66778–66786
Imazamox, 66773–66778

Pymetrozine, 66786–66794
Rhodamine B, 66769–66773
PROPOSED RULES
Air programs:
Fuels and fuel additives—
Motorcycle fuel inlet restrictor exemption; gasoline containing lead or lead additives; prohibition for highway use; withdrawn, 66867

Executive Office of the President
See Presidential Documents
See Trade Representative, Office of United States

Federal Aviation Administration
RULES
Airworthiness directives:
Airbus, 66733–66734, 66739–66741
Boeing, 66734–66737
Dornier, 66730–66732
Gulfstream, 66737–66739
Class E airspace, 66741
PROPOSED RULES
Airworthiness directives:
Air Tractor, Inc., 66823–66828
Fairchild, 66828–66832
MD Helicopters, Inc., 66821–66823
Pratt & Whitney, 66819–66821
Class E5 airspace, 66832–66833
NOTICES
Agency information collection activities:
Submission for OMB review; comment request, 66965–66966
Meetings:
Research, Engineering, and Development Advisory Committee, 66966

Federal Communications Commission
RULES
Radio stations; table of assignments:
Kentucky, 66802
PROPOSED RULES
Digital television stations; table of assignments:
Wisconsin, 66867–66868

Federal Deposit Insurance Corporation
NOTICES
Agency information collection activities:
Submission for OMB review; comment request, 66978–66979
Meetings; Sunshine Act, 66895–66896

Federal Election Commission
PROPOSED RULES
Allocations of candidate and committee activities:
Party committee transfers of nonfederal funds for allocable expenses payment; policy statement, 66813

Federal Emergency Management Agency
NOTICES
Preparedness:
Offsite radiological emergency preparedness program; services fee; 2002 FY hourly rate, 66896

Federal Energy Regulatory Commission
NOTICES
Applications, hearings, determinations, etc.:
Central Illinois Public Service Co. et al., 66893
Eastern Shore Natural Gas Co., 66893
Kinder Morgan Interstate Gas Transmission, LLC, 66893
PG&E Gas Transmission, Northwest Corp., 66894
Texas-New Mexico Power Co., 66894
Transcontinental Gas Pipe Line Corp., 66894–66895
Williams Gas Pipelines Central, Inc., 66895
Wyoming Interstate Co., Ltd., 66895

Federal Housing Finance Board
RULES
Federal home loan bank system:
Unsecured credit limits, 66718–66730
PROPOSED RULES
Affordable Housing Program; amendments, 66813–66819

Federal Motor Carrier Safety Administration
NOTICES
Motor carrier safety standards:
Driver qualifications—
Boggs, Loa A., et al.; vision requirement exemptions, 66966–66968
Bohley, Woodrow E., et al.; vision requirement exemptions, 66969–66970
Parts and accessories necessary for safe operation—
Ford Motor Co.; fuel tank exemptions, 66970–66972
General Motors Corp.; fuel tank exemptions, 66972–66973

Federal Reserve System
NOTICES
Agency information collection activities:
Submission for OMB review; comment request, 66978–66979
Banks and bank holding companies:
Formations, acquisitions, and mergers, 66896

Federal Trade Commission
NOTICES
Prohibited trade practices:
Diageo PLC et al., 66896–66899
Valero Energy Corp. et al., 66899–66902

Federal Transit Administration
NOTICES
Agency information collection activities:
Proposed collection; comment request, 66973–66974

Fine Arts Commission
See Commission of Fine Arts

Fish and Wildlife Service
RULES
Endangered and threatened species:
Tumbling Creek cavesnail, 66802–66811
PROPOSED RULES
Endangered and threatened species:
Tumbling Creek cavesnail, 66868–66869
NOTICES
Marine mammals:
Incidental taking; authorization letters, etc.—
Oil and gas industry exploration activities; polar bears, 66915–66916

Food and Drug Administration
RULES
Animal drugs, feeds, and related products:
Sponsor name and address changes—
Phibro Animal Health, 66742–66743
Organization, functions, and authority delegations:
Address change; technical amendment, 66741–66742

NOTICES
Reports and guidance documents; availability, etc.:
Antimicrobial drug residues from food of animal origin; effects on human intestinal flora; assessment, 66910–66912

Forest Service
NOTICES
Environmental statements; notice of intent:
Lassen National Forest, CA, 66870
Meetings:
Oregon Coast Provincial Advisory Committee, 66870
Siskiyou County Resource Advisory Committee, 66870
Siuslaw Resource Advisory Committee, 66870–66871

General Services Administration
RULES
Federal Acquisition Regulation (FAR):
Contractor responsibility, labor relations costs, and costs relating to legal and other proceedings, 66984–66986
Revocation, 66986–66990
Introduction, 66983–66984
Small entity compliance guide, 66990–66991
Federal travel:
Per diem localities; maximum lodging and meal allowances, 66794–66802

Health and Human Services Department
See Centers for Disease Control and Prevention
See Centers for Medicare & Medicaid Services
See Children and Families Administration
See Food and Drug Administration
See Indian Health Service
See National Institutes of Health

Indian Affairs Bureau
PROPOSED RULES
Economic enterprises:
Gaming on trust lands acquired after October 17, 1988; determination procedures, 66847–66848
NOTICES
Indian tribes, acknowledgment of existence determinations, etc.:
Lenape Nation of Pennsylvania et al., 66916–66917

Indian Health Service
NOTICES
Agency information collection activities:
Proposed collection; comment request, 66912–66913

Interior Department
See Fish and Wildlife Service
See Indian Affairs Bureau
See Land Management Bureau
See Minerals Management Service
See National Park Service
See Surface Mining Reclamation and Enforcement Office

International Trade Administration
NOTICES
Antidumping:
Fresh garlic from—
China, 66872–66873
Polyethylene terephthalate film, sheet, and strip from—
Korea, 66873–66874
Tariff rate quotas:
Worsted wool fabrics, 66874

Justice Department
See Drug Enforcement Administration
NOTICES
Pollution control; consent judgments:
Baton Rouge, LA, et al., 66931
Chevron U.S.A. Production Co., 66931
Clean Harbors Inc. et al., 66931–66932
Cohen et al., 66932
Del Norte County, CA, 66932
Gendron, Frederick, et al., 66933
Grand Rapids, MI, 66933
International Paper Co. et al., 66933–66934
Marine Shale Processors, Inc., 66934
Monongahela Power Co., Inc., 66934–66935
MRC Holdings, Inc., et al., 66935
Premium Standard Farms, Inc., et al., 66935–66936
Viacom, Inc., et al., 66936

Labor Department
See Employment and Training Administration
See Occupational Safety and Health Administration
NOTICES
Agency information collection activities:
Submission for OMB review; comment request, 66939–66941

Land Management Bureau
NOTICES
Alaska native claims selection:
Dinyea Corp., 66917
Closure of public lands:
Arizona, 66917–66918
California, 66918
Environmental statements; availability, etc.:
Arkansas and Louisiana; public domain lands; planning analysis; correction, 66918
Douglas and Coos Counties, OR; natural gas pipeline right-of-way, 66918–66920
Rocking ''R'' Ranch, Trona, CA, 66920
Environmental statements; notice of intent:
Blue Mountain Lake Project Area, AR; Federal mineral estate leasing for oil and gas exploration and development, 66920
Carr Creek Project Area, KY; Federal mineral estate leasing for oil and gas exploration and development, 66920–66921
Grand Staircase-Escalante National Monument, UT; correction, 66921
Lea County, NM, et al.; pipeline right-of-way, 66921–66922
Motor vehicle use restrictions:
California, 66922
Public land orders:
New Mexico, 66922–66923
Realty actions; sales, leases, etc.:
Arizona, 66923
California, 66923–66924
Idaho, 66924–66925
Nevada, 66925–66927
Survey plat filings:
Minnesota, 66927–66928
Wisconsin, 66928

Minerals Management Service
PROPOSED RULES
Outer Continental Shelf; oil, gas, and sulphur operations:
Fixed and floating platforms; documents incorporated by reference, 66851–66865

Pressure Vessel Inspection Code; incorporation by reference, 66848–66850

National Aeronautics and Space Administration
RULES
Federal Acquisition Regulation (FAR):
Contractor responsibility, labor relations costs, and costs relating to legal and other proceedings, 66984–66986
Revocation, 66986–66990
Introduction, 66983–66984
Small entity compliance guide, 66990–66991

National Institute of Standards and Technology
NOTICES
Grants and cooperative agreements; availability, etc.:
Small grants programs, 66874–66887

National Institutes of Health
NOTICES
Meetings:
National Cancer Institute, 66913–66914
National Institute of Child Health and Human Development, 66914
National Institute of Neurological Disorders and Stroke, 66914
National Library of Medicine, 66914–66915
Peer Review Oversight Group, 66915
Scientific Review Center, 66915

National Oceanic and Atmospheric Administration
RULES
Fishery conservation and management:
West Coast States and Western Pacific fisheries—
Coastal pelagic species, 66811–66812
NOTICES
Permits:
Marine mammals, 66888

National Park Service
RULES
Historic properties leasing regulations, 66755–66763
NOTICES
National Register of Historic Places:
Pending nominations, 66928–66930

National Science Foundation
NOTICES
Agency information collection activities:
Submission for OMB review; comment request, 66945

Natural Resources Conservation Service
NOTICES
Environmental statements; availability, etc.:
Curry County et al., NM, 66871
Reports and guidance documents; availability, etc.:
Aging watershed dams rehabilitation; request rank and approval system, 66871

Nuclear Regulatory Commission
NOTICES
Environmental statements; availability, etc.:
Energy Department, 66947–66948
Exelon Generation Co., LLC, 66948
Meetings; Sunshine Act, 66949
Reports and guidance documents; availability, etc.:
Boiling water reactors; post accident sampling requirements elimination; model safety evaluation, 66949–66954
Applications, hearings, determinations, etc.:
Entergy Operations, Inc., 66945–66946
Florida Power & Light Co., 66946–66947

Occupational Safety and Health Administration
NOTICES
Settlement agreements:
Occupational injury and illness recording and reporting—
National Association of Manufacturers, 66943–66944

Office of United States Trade Representative
See Trade Representative, Office of United States

Personnel Management Office
RULES
Federal Personnel Manual abolished and references removed; technical amendments, 66709–66712

Postal Service
NOTICES
Meetings; Sunshine Act, 66954

Presidential Documents
EXECUTIVE ORDERS
United Airlines, Inc., and International Association of Machinists and Aerospace Workers; creation of an emergency board of investigation (EO 13248), 66705–66706
ADMINISTRATIVE ORDERS
Jerusalem Embassy Act; suspension of funding limitations (Presidential Determination No, 2002-5 of December 14, 2001), 66707

Public Health Service
See Centers for Disease Control and Prevention
See Food and Drug Administration
See Indian Health Service
See National Institutes of Health

Research and Special Programs Administration
RULES
Pipeline safety:
Hazardous liquid transportation—
Hazardous liquid and carbon dioxide pipelines; corrosion control standards, 66993–67007

Securities and Exchange Commission
PROPOSED RULES
Securities:
Qualified purchaser; definition, 66839–66847
NOTICES
Investment Company Act of 1940:
Exemption applications—
Sensar Corp., 66954–66956
Joint industry plan:
Chicago Board Options Exchange, Inc., 66956–66957
Self-regulatory organizations:
Clearing agency registration applications—
Government Securities Clearing Corp., 66957
Self-regulatory organizations; proposed rule changes:
American Stock Exchange LLC, 66957–66961

State Department
NOTICES
Agency information collection activities:
Proposed collection; comment request, 66961–66962
Art objects; importation for exhibition:
Cosme Tura: Painting and Design in Renaissance Ferrara, 66963

Goya: Images of Women, 66963
Surrealism: Desire Unbound, 66963

Surface Mining Reclamation and Enforcement Office
RULES
Permanent program and abandoned mine land reclamation plan submissions:
Iowa, 66743–66747
Pennsylvania, 67009–67067

Surface Transportation Board
NOTICES
Rail carriers:
Cost recovery procedures—
Adjustment factor, 66974
Railroad operation, acquisition, construction, etc.:
Fulton Railroad Co., Ltd., 66974–66975
Norfolk Southern Railway Co. et al., 66975

Technology Administration
NOTICES
Committees; establishment, renewal, termination, etc.:
National Medal of Technology Nomination Evaluation Committee, 66888–66889

Trade Representative, Office of United States
NOTICES
Telecommunications trade agreements; compliance; comment request, 66963–66964

Transportation Department
See Coast Guard
See Federal Aviation Administration
See Federal Motor Carrier Safety Administration
See Federal Transit Administration
See Research and Special Programs Administration
See Surface Transportation Board
PROPOSED RULES
Airline service quality performance reports:
Causes of airline delays and cancellations; reporting requirements modification, 66833–66839
NOTICES
Aviation proceedings:
Agreements filed; weekly receipts, 66964–66965
Certificates of public convenience and necessity and foreign air carrier permits; weekly applications, 66965

Treasury Department
See Comptroller of the Currency
NOTICES
Grants and cooperative agreements; availability, etc.:
First Accounts Program, 66975–66978

Veterans Affairs Department
RULES
Adjudication; pensions, compensation, dependency, etc.:
Filipino veterans' benefits improvements, 66763–66769
NOTICES
Agency information collection activities:
Submission for OMB review; comment request, 66979–66981
31827
Meetings:
Rehabilitation Research and Development Service Scientific Merit Review Board, 66982

Separate Parts In This Issue

Part II
Defense Department; General Services Administration; National Aeronautics and Space Administration, 66983–66991

Part III
Transportation Department, Research and Special Programs Administration, 66993–67007

Part IV
Interior Department, Surface Mining Reclamation and Enforcement Office, 67009–67067

Reader Aids
Consult the Reader Aids section at the end of this issue for phone numbers, online resources, finding aids, reminders, and notice of recently enacted public laws.

To subscribe to the Federal Register Table of Contents LISTSERV electronic mailing list, go to http://listserv.access.gpo.gov and select Online mailing list archives, FEDREGTOC-L, Join or leave the list (or change settings); then follow the instructions.

CFR PARTS AFFECTED IN THIS ISSUE

A cumulative list of the parts affected this month can be found in the Reader Aids section at the end of this issue.

3 CFR
Executive Orders:
13248 66705
Administrative Orders:
Presidential Determinations:
No. 02–05 of December 14, 2001 66707

5 CFR
213 66709
250 66709
293 66709
294 66709
300 66709
315 66709
316 66709
332 66709
339 66709
351 66709
352 66709
534 66709
550 66709
720 66709
732 66709
831 66709
837 66709
841 66709
930 66709
960 66709

7 CFR
56 66712
70 66712

10 CFR
1707 66714

11 CFR
Proposed Rules:
106 66813

12 CFR
930 66718
932 66718
Proposed Rules:
951 66813

14 CFR
39 (5 documents) 66730, 66733, 66734, 66737, 66739
71 66741
Proposed Rules:
39 (4 documents) 66819, 66821, 66823, 66828
71 66832
234 66833

17 CFR
Proposed Rules:
230 66839

21 CFR
Ch. 1 66741
510 66742

25 CFR
Proposed Rules:
292 66847

30 CFR
915 66743
938 67010
Proposed Rules:
250 (2 documents) 66848, 66851

33 CFR
110 (2 documents) 66747, 66749
117 66751
165 (3 documents) 66747, 66749, 66753
Proposed Rules:
117 66865

36 CFR
18 66755

38 CFR
3 66763

40 CFR
52 66769
80 66769
153 66769
180 (4 documents) 66769, 66773, 66778, 66786
Proposed Rules:
80 66867

41 CFR
Ch. 301 66794

47 CFR
73 66803
Proposed Rules:
73 66867

48 CFR
Ch. 1 (2 documents) 66984, 66990
9 (2 documents) 66984, 66986
14 (2 documents) 66984, 66986
15 (2 documents) 66984, 66986
31 (2 documents) 66984, 66986
52 (2 documents) 66984, 66986

49 CFR
195 66994

50 CFR
17 66803
660 66811
Proposed Rules:
17 66868

Federal Register
Vol. 66, No. 248
Thursday, December 27, 2001

Presidential Documents

Title 3—

The President

Executive Order 13248 of December 20, 2001

Establishing an Emergency Board To Investigate a Dispute Between United Airlines, Inc., and its Mechanics and Related Employees Represented by the International Association of Machinists and Aerospace Workers

A dispute exists between United Airlines, Inc., and its employees represented by the International Association of Machinists and Aerospace Workers.

The dispute has not heretofore been adjusted under the provisions of the Railway Labor Act, as amended (45 U.S.C. 151–188) (the ''Act'').

In the judgment of the National Mediation Board, this dispute threatens substantially to interrupt interstate commerce to a degree that would deprive sections of the country of essential transportation service.

NOW, THEREFORE, by the authority vested in me as President by the Constitution and the laws of the United States, including sections 10 and 201 of the Act (45 U.S.C. 160 and 181), it is hereby ordered as follows:

Section 1. *Establishment of the Board (Board).* There is established, effective December 21, 2001, a Board of three members to be appointed by the President to investigate and report on this dispute. No member may be pecuniarily or otherwise interested in any organization of airline employees or any air carrier. The Board shall perform its functions subject to the availability of funds.

Sec. 2. *Report.* The Board shall report to the President with respect to this dispute within 30 days of its creation.

Sec. 3. *Maintaining Conditions.* As provided by section 10 of the Act, from the date of the creation of the Board and for 30 days after the Board has submitted its report to the President, no change in the conditions out of which the dispute arose shall be made by the parties to the controversy, except by the agreement of the parties.

Sec. 4. *Records Maintenance.* The records and files of the Board are records of the Office of the President and upon the Board's termination shall be maintained in the physical custody of the National Mediation Board.

Sec. 5. *Expiration.* The Board shall terminate upon the submission of the report provided for in section 2 of this order.

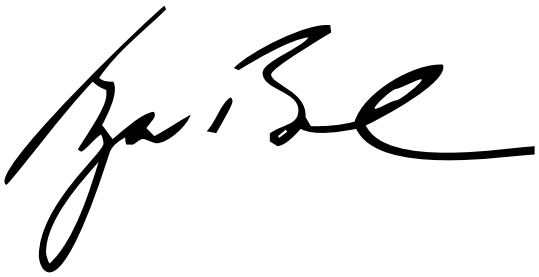

THE WHITE HOUSE,
December 20, 2001.

[FR Doc. 01–31959
Filed 12–26–01; 8:45 am]
Billing code 3195–01–P

Federal Register
Vol. 66, No. 248
Thursday, December 27, 2001

Presidential Documents

Title 3—

The President

Presidential Determination No. 02–05 of December 14, 2001

Suspension of Limitations Under the Jerusalem Embassy Act

Memorandum for the Secretary of State

Pursuant to the authority vested in me as President by the Constitution and the laws of the United States, including section 7(a) of the Jerusalem Embassy Act of 1995 (Public Law 104–45) (the ''Act''), I hereby determine that it is necessary to protect the national security interests of the United States to suspend for a period of 6 months the limitations set forth in sections 3(b) and 7(b) of the Act. My Administration remains committed to beginning the process of moving our embassy to Jerusalem.

You are hereby authorized and directed to transmit this determination to the Congress, accompanied by a report in accordance with section 7(a) of the Act, and to publish the determination in the **Federal Register.**

This suspension shall take effect after transmission of this determination and report to the Congress.

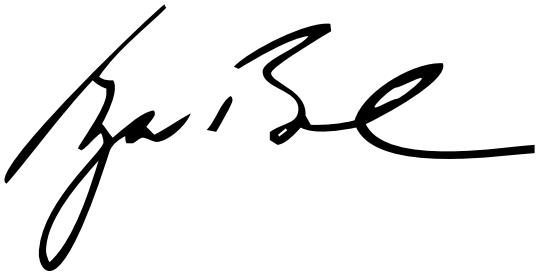

THE WHITE HOUSE,
Washington, December 14, 2001.

[FR Doc. 01–31813
Filed 12–21–01; 8:45 am]
Billing code 4710–10–M

Rules and Regulations

Federal Register

Vol. 66, No. 248

Thursday, December 27, 2001

This section of the FEDERAL REGISTER contains regulatory documents having general applicability and legal effect, most of which are keyed to and codified in the Code of Federal Regulations, which is published under 50 titles pursuant to 44 U.S.C. 1510.

The Code of Federal Regulations is sold by the Superintendent of Documents. Prices of new books are listed in the first FEDERAL REGISTER issue of each week.

OFFICE OF PERSONNEL MANAGEMENT

5 CFR Parts 213, 250, 293, 294, 300, 315, 316, 332, 339, 351, 352, 534, 550, 720, 732, 831, 837, 841, 930, and 960

RIN 3206–AJ54

Miscellaneous Changes in Office of Personnel Management's Regulations

AGENCY: Office of Personnel Management.

ACTION: Final rule; technical amendment.

SUMMARY: The Office of Personnel Management is issuing a final rule to remove all references to the Federal Personnel Manual (FPM). With the abolishment of the FPM, these references are no longer in effect. This action does not make any substantive changes to the affected rules.

DATES: This rule is effective December 27, 2001.

FOR FURTHER INFORMATION CONTACT: Richard B. Lowe, (202) 606–1000.

SUPPLEMENTARY INFORMATION: Pursuant to 5 U.S.C. 553(b)(3)(B) and (d)(3), good cause exists for publishing this amendment without a notice of proposed rulemaking and a 30-day delay in effectiveness. This amendment is non-substantive and will not affect current compliance.

Regulatory Flexibility Act

I certify that these regulations will not have a significant economic impact on a substantial number of small entities because they will affect only Federal agencies and employees.

List of Subjects in 5 CFR Parts 213, 250, 293, 294, 300, 315, 316, 332, 339, 351, 352, 534, 550, 720, 732, 831, 837, 841, 930, and 960

Administrative practice and procedure, Air traffic controllers, Alimony, Archives and records, Authority delegations (Government agencies), Claims, Computer technology, Disability benefits, Equal employment opportunity, Firefighters, Freedom of information, Government employees, Health records, Hospitals, Income taxes, Individuals with disabilities, Intergovernmental relations, Law enforcement officers, Motor vehicles, National defense, Organization and functions (Government agencies), Pensions, Reporting and recordkeeping requirements, Wages.

Office of Personnel Management.

Kay Coles James,

Director.

Accordingly, OPM is amending parts 213, 250, 293, 294, 300, 315, 316, 332, 339, 351, 352, 534, 550, 720, 732, 831, 837, 841, 930, and 960 of title 5 of the Code of Federal Regulations as follows:

PART 213—EXCEPTED SERVICE

1. The authority citation for part 213 continues to read as follows:

Authority: 5 U.S.C. 3301 and 3302, E.O. 10577, 3 CFR 1954–1958 Comp., p. 218; Sec. 213.101 also issued under 5 U.S.C. 2103; Sec. 213.3102 also issued under 5 U.S.C. 3301, 3302, 3307, 8337(h) and 8456; E.O. 12364, 47 FR 22931, 3 CFR 1982 Comp., p. 185; 38 U.S.C. 4301 *et seq.*; Pub. L. 105–339, 112 STAT. 3182–83; and E.O. 13162.

§ 213.3102 [Amended]

2. In § 213.3102, paragraph (t) is amended by removing ''in accordance with the guidance in Federal Personnel Manual Chapter 306'' and by adding the verbatim language from the Federal Personnel Manual ''who have been certified by state vocational rehabilitation agencies as likely to succeed'' in its place, paragraph (ii) is amended by removing ''published in the Federal Personnel Manual'' and by adding ''prescribed in OPM issuances'' in its place.

PART 250—PERSONNEL MANAGEMENT IN AGENCIES

3. The authority citation for part 250 continues to read as follows:

Authority: 5 U.S.C. 1101 note, 1104, 1302, 3301, 3302; E.O. 10577, 12 FR 1259, 3 CFR, 1954–1958 Comp., p. 218.

§ 250.101 [Amended]

4. Section 250.101 is amended by removing ''Federal Personnel Manual'' and by adding ''Guide to Processing Personnel Actions'' in its place and by removing ''Federal Personnel Manual Chapter 296'' and adding ''the Guide to Processing Personnel Actions'' in its place.

§ 250.103 [Amended]

5. Section 250.103 is amended by removing ''in the Federal Personnel Manual''.

PART 293—PERSONNEL RECORDS

6. The authority citation for part 293 continues to read as follows:

Authority: 5 U.S.C. 1104; 5 U.S.C. Chap 7; 5 U.S.C. 7135; 5 U.S.C. 7301; and E. O. 11491.

§ 293.103 [Amended]

7. In § 293.103, paragraph (b) is amended by removing both occurrences of ''Federal Personnel Manual'' and by adding ''Guide to Personnel Recordkeeping'' in their place.

§ 293.302 [Amended]

8. Section 293.302 is amended by removing ''Federal Personnel Manual'' and by adding ''Guide to Personnel Recordkeeping'' in its place.

§ 293.306 [Amended]

9. In § 293.306, paragraph (b)(3) is amended by removing ''FPM Supplement 293–31'' and by adding ''the Guide to Personnel Recordkeeping'' in its place.

§ 293.309 [Amended]

10. Section 293.309 is amended by removing ''Federal Personnel Manual'' and by adding ''Guide to Personnel Recordkeeping'' in its place.

§ 293.405 [Amended]

11. In § 293.405, paragraph (a) is amended by removing ''FPM Supplement 293–31'' and by adding ''the Guide to Personnel Recordkeeping'' in its place.

§ 293.504 [Amended]

12. In § 293.504, paragraph (a) is amended by removing ''FPM'' and by adding ''OPM'' in its place.

PART 294—AVAILABILITY OF OFFICIAL INFORMATION

13. The authority citation for part 294 continues to read as follows:

Authority: 5 U.S.C. 552, Freedom of Information Act, Pub. L. 92–502, as amended by the Freedom of Information Reform Act of 1936, Pub. L. 99–570, and E.O. 12600, 52 FR 23781 (June 25, 1987).

§ 294.106 [Amended]

14. In § 294.106, the heading is amended by removing ''FPM'' and adding ''OPM'' in its place, and by removing ''and addendum'', and paragraphs (a)(1) and (d) are amended by removing ''FPM''.

§ 294.301 [Amended]

15. In § 294.301, paragraph (a) is amended by removing ''Federal Personnel Manual or the''.

PART 300—EMPLOYMENT (GENERAL)

16. The authority citation for part 300 continues to read as follows:

Authority: 5 U.S.C. 552, 3301, and 3302; E.O. 10577, 3 CFR 1954–1958 Comp., page 218, unless otherwise noted.

Secs. 300.101 through 300.104 also issued under 5 U.S.C. 7201, 7204, and 7701; E.O. 11478, 3 CFR 1966–1970 Comp., page 803.

Secs. 300.401 through 300.408 also issued under 5 U.S.C. 1302 (c), 2301, and 2302.

Secs. 300.501 through 300.507 also issued under 5 U.S.C. 1103 (a)(5).

Secs. 300.603 also issued under 5 U.S.C. 1104.

§ 300.501 [Amended]

17. In § 300.501, paragraph (c) is amended by removing ''chapter 630 of the Federal Personnel Manual'' and by adding ''OPM issuances'' in its place.

§ 300.503 [Amended]

18. In § 300.503, paragraph (b) is amended by removing ''in chapter 316 of the Federal Personnel Manual'' and by adding ''found in 5 CFR part 316'' in its place.

§ 300.603 [Amended]

19. In § 300.603, paragraph (b)(6) is amended by removing ''chapter 338 of the Federal Personnel Manual'' and by adding ''OPM's operating manuals'' in its place.

PART 315—CAREER AND CAREER-CONDITIONAL EMPLOYMENT

20. The authority citation for part 315 continues to read as follows:

Authority: 5 U.S.C. 1302, 3301, and 3302; E.O. 10577. 3 CFR, 1954–1958 Comp. P. 218, unless otherwise noted; and E.O. 13162. Secs. 315.601 and 315.609 also issued under 22 U.S.C. 3651 and 3652. Secs. 315.602 and 315.604 also issued under 5 U.S.C. 1104. Sec. 315.603 also issued under 5 U.S.C. 8151. Sec. 315.605 also issued under E.O. 120034, 3 CFR, 1978 Comp. p. 11. Sec. 315.606 also issued under E.O. 11219, 3 CFR, 1964–1965 Comp. p. 303. Sec 315.607 also issued under 22 U.S.C. 2506. Sec. 315.608 also issued under E.O. 12721, 3 CFR, 1990 Comp. p. 293. Sec 315.610 also issued under 5 U.S.C. 3304(d). Sec. 315.611 also issued under Section 511, Pub. L. 106–117, 113 STAT, 1575–76. Sec 315.710 also issued under E.O. 12108, 3 CFR, 1978 Comp., p. 264.

§ 315.603 [Amended]

21. In § 315.603, paragraphs (a)(1)(iv), (a)(2)(ii), (a)(3)(iv) are amended by removing ''by a provision of the Federal Personnel Manual''.

§ 315.606 [Amended]

22. Section 315.606 is amended by removing ''in the Federal Personnel Manual''.

§ 315.701 [Amended]

23. In § 315.701, paragraph (a)(2) is amended by removing ''by a provision of the Federal Personnel Manual''.

§ 315.704 [Amended]

24. In § 315.704, paragraph (b)(2) is amended by removing ''the Federal Personnel Manual'' and by adding ''its operating manuals'' in its place.

§ 315.707 [Amended]

25. In § 315.707, paragraph (a)(1) is amended by removing ''in the Federal Personnel Manual''.

§ 315.710 [Amended]

26. In § 315.710, paragraph (a) is amended by removing ''in the Federal Personnel Manual''.

PART 316—TEMPORARY AND TERM EMPLOYMENT

27. The authority citation for part 316 continues to read as follows:

Authority: 5 U.S.C. 3301, 3302; E.O. 10577, 3 CFR, 1954–1958 Comp., p. 218.

§ 316.403 [Amended]

28. In § 316.403, paragraph (a)(3) is amended by removing ''in the Federal Personnel Manual''.

PART 332—RECRUITMENT AND SELECTION THROUGH COMPETITIVE EXAMINATION

29. The authority citation for part 332 continues to read as follows:

Authority: 5 U.S.C. 1302, 3301, 3302; E.O. 10577, 3 CFR, 1954–1958 Comp., p. 218.

§ 332.301 [Amended]

30. In § 332.301, paragraph (b) is amended by removing ''in the Federal Personnel Manual''.

§ 332.312 [Amended]

31. Section 332.312, introductory paragraph, is amended by removing ''the Federal Personnel Manual'' and by adding ''its operating manuals'' in its place.

§ 332.406 [Amended]

32. In § 332.406, paragraph (e) is amended by removing ''the Federal Personnel Manual'' and by adding ''its operating manuals'' in its place.

PART 339—MEDICAL QUALIFICATION DETERMINATIONS

33. The authority citation for part 339 continues to read as follows:

Authority: 5 U.S.C. 3301, 3302, 5112, E.O. 9830, February 24, 1947.

§ 339.202 [Amended]

34. In § 339.202, paragraph (b) is amended by removing the comma and ''and'' and adding a period after ''position'' and by removing paragraph (c).

PART 351—REDUCTION IN FORCE

35. The authority citation for part 351 continues to read as follows:

Authority: 5 U.S.C. 1302, 3502, 3503; sec. 351.801 also issued under E.O. 12828, 58 FR 2965.

§ 351.205 [Amended]

36. Section 351.205 is amended by removing ''through the Federal Personnel Manual system''.

PART 352—REEMPLOYMENT RIGHTS

Subpart C—Details and Transfer of Federal Employees to International Organizations

37. The authority citation for subpart C continues to read as follows:

Authority: 5 U.S.C. 3584, E.O. 11552, 3 CFR 1966–1970 Comp., p. 954; Section 352.313 also issued under 5 U.S.C. 7701, *et seq.*

§ 352.304 [Amended]

38. Section 352.304 is amended by removing both occurrences of ''in the Federal Personnel Manual''.

§ 352.310 [Amended]

39. In § 352.310, paragraph (c) is amended by removing ''the Federal Personnel Manual'' and by adding ''OPM issuances'' in its place.

PART 534—PAY UNDER OTHER SYSTEMS

40. The authority citation for part 534 continues to read as follows:

Authority: 5 U.S.C. 1104, 5307, 5351, 5352, 5353, 5376, 5383, 5384, 5385, 5541, and 5550a.

§ 534.503 [Amended]

41. In § 534.503, paragraph (a) is amended by removing ''and the Federal Personnel Manual'', by removing the comma and adding ''and'' after ''law'', and by removing the comma after ''regulations''.

PART 550—PAY ADMINISTRATION (GENERAL)

Subpart E—Pay From More Than One Position

42. The authority citation for part 550 subpart E continues to read as follows:

Authority: 5 U.S.C. 5533.

§ 550.504 [Amended]

43. In § 550.504, paragraph (b) is amended by removing ''in the Federal Personnel Manual''.

PART 720—AFFIRMATIVE EMPLOYMENT PROGRAMS

Subpart C—Disabled Veterans Affirmative Action Program

44. The authority citation for part 720, subpart C continues to read as follows:

Authority: 5 U.S.C. 7201; 42 U.S.C. 2000e; 38 U.S.C. 101(2), 2001(3), 2014; 5 U.S.C. 3112; 29 U.S.C. 791(b).

§ 720.306 [Amended]

45. In § 720.306, paragraph (b) is amended by removing ''through the Federal Personnel Manual (FPM)'' and the comma after ''veterans''.

PART 732—NATIONAL SECURITY POSITIONS

46. The authority citation for part 732 continues to read as follows:

Authority: 5 U.S.C. 3301, 3302, 7312; 50 U.S.C. 403; E.O. 10450, 3 CFR, 1949–1953 Comp., p. 936.

§ 732.102 [Amended]

47. In § 732.102, paragraph (a) is amended by removing ''FPM chapter 732 and related'' and adding ''OPM'' in its place.

§ 732.201 [Amended]

48. In § 732.201, paragraph (b) is amended by removing ''FPM chapter 732'' and adding ''OPM issuances'' in its place.

§ 732.301 [Amended]

49. In § 732.301, paragraph (e) is amended by removing ''the Federal Personnel Manual and related'' and adding ''its'' in its place.

PART 831—RETIREMENT

50. The authority citation for part 831 continues to read as follows:

Authority: 5 U.S.C. 8347; Sec. 831.102 also issued under 5 U.S.C. 8334; Sec. 831.106 also issued under 5 U.S.C. 552a; Sec. 831.108 also issued under 5 U.S.C. 8336(d)(2); Sec. 831.114 also issued under 5 U.S.C. 8336(d)(2) and section 7001 of Pub. L. 105–174, 112 Stat. 58; Sec. 831.201(b)(1) also issued under 5 U.S.C. 8347(g); Sec. 831.201(b)(6) also issued under 5 U.S.C. 7701(b)(2); Sec. 831.201(g) also issued under sections 11202(f), 11232(e), and 11246(b) of Pub. L. 105–33, 111 Stat. 251; Sec. 831.201(g) also issued under sections 7(b) and 7(e) of Pub. L. 105–274, 112 Stat. 2419; Sec. 831.201(i) also issued under sections 3 and 7(c) of Pub. L. 105–274, 112 Stat. 2419; Sec. 831.204 also issued under section 102(e) of Pub. L. 104–8, 109 Stat. 102, as amended by section 153 of Pub. L. 104–134, 110 Stat. 1321; Sec. 831.205 also issued under section 2207 of Pub. L. 106–265, 114 Stat. 784; Sec. 831.301 also issued under section 2203 of Pub. L. 106–265, 114 Stat. 780; Sec. 831.303 also issued under 5 U.S.C. 8334(d)(2) and section 2203 of Pub. L. 106–235, 114 Stat. 780; Sec. 831.502 also issued under 5 U.S.C. 8337; Sec. 831.502 also issued under section 1(3), E.O. 11228, 3 CFR 1964–1965 Comp. p. 317; Sec. 831.663 also issued under 5 U.S.C. 8339(j) and (k)(2); Secs. 831.663 and 831.664 also issued under section 11004(c)(2) of Pub. L. 103–66, 107 Stat. 412; Sec. 831.682 also issued under section 201(d) of Pub. L. 99–251, 100 Stat. 23; Sec. 831.912 also issued under section 636 of H.R. 5658, incorporated by reference in Pub. L. 106–554, 114 Stat. 2763, and published as Appendix C to Pub. L. 106–554 at 114 Stat. 2763A–125; subpart V also issued under 5 U.S.C. 8343a and section 6001 of Pub. L. 100–203, 101 Stat. 1330–275; Sec. 831.2203 also issued under section 7001(a)(4) of Pub. L. 101–508, 104 Stat. 1388–328.

Subpart A—Administration and General Provisions

§ 831.102 [Amended]

51. Section 831.102 is amended by removing ''in Federal Personnel Manual Supplement 831–1'' and adding in its place ''by OPM issuances.''

§ 831.111 [Amended]

52. In section 831.111 paragraph (a) and (b)(2) are amended by removing ''in the Federal Personnel Manual''.

Subpart F—Survivor Annuities

§ 831.613 [Amended]

53. In § 831.613, paragraph (d) is amended by removing ''through the Federal Personnel Manual system or other issuances''.

Subpart S—State Income Tax Withholding

§ 831.1907 [Amended]

54. Remove § 831.1907.

Subpart U—Deposits for Military Service

§ 831.2103 [Amended]

55. In § 831.2103, amend the definition for *Sufficient evidence,* by removing ''Federal Personnel Manual''.

§ 831.2106 [Amended]

56. In § 831.2106, paragraph (c) is amended by removing ''in the Federal Personnel Manual'' .

§ 831.2107 [Amended]

57. In § 831.2107 paragraph (a)(5) is amended by removing ''in the Federal Personnel Manual'' and by adding in its place ''by OPM issuances.''

PART 837—REEMPLOYMENT OF ANNUITANTS

58. The authority citation for part 837 continues to read as follows:

Authority: 5 U.S.C. 8337, 8344, 8347, 8455, 8456, 8461, and 8468; and sec. 302, Pub. L. 99–335, 100 Stat. 514, as amended by Title I, sec. 134(a), Pub. L. 100–238, 101 Stat. 1762; Title V, sec. 529 [Title I, sec. 108(c)], Pub. L. 101–509, 104 Stat. 1427, 1450; Div. A, Title XII, sec. 1206(j)(3), Pub. L. 101–510, 104 Stat. 1664; Div. A., Title VI, sec. 655(c), Pub. L. 102–190, 105 Stat. 1392; sec. 8(a), Pub. L. 102–378, 106 Stat. 1359.

§ 837.304 [Amended]

59. Section 837.304, paragraphs (a), (b), and (c) are amended by removing ''in the Federal Personnel Manual''.

PART 841—FEDERAL EMPLOYEES' RETIREMENT SYSTEM—GENERAL ADMINISTRATION

60. The authority citation for part 841 continues to read as follows:

Authority: 5 U.S.C. 8461; Sec. 841.108 also issued under 5 U.S.C. 552a; subpart D also issued under 5 U.S.C. 8423; Sec. 841.504 also issued under 5 U.S.C. 8422; Sec. 841.507 also issued under section 505 of Pub. L. 99–335; subpart J also issued under 5 U.S.C. 8469; Sec. 841.506 also issued under 5 U.S.C. 7701(b)(2); Sec. 841.508 also issued under section 505 of Pub. L. 99–335; Sec. 841.604 also issued under Title II, Pub. L. 106–265, 114 Stat. 780.

§ 841.1008 [Amended]

61. Remove § 841.1008.

PART 930—PROGRAMS FOR SPECIFIC POSITIONS AND EXAMINATIONS (MISCELLANEOUS)

62. The authority citation for part 930 continues to read as follows:

Authority: 5 U.S.C. 3301, 3320, 7301; 40 U.S.C. 491; E.O. 10577, 3 CFR, 1954–1958 Comp., p. 218 E.O. 11222, 3 CFR, 1964–1965 Comp., p. 306. (Separate authority is listed under § 930.107)

§ 930.110 [Amended]

63. Section 930.110 is amended by removing ''and the Federal Personnel Manual''.

§ 930.115 [Amended]

64. Section 930.115 is amended by removing ''or the Federal Personnel Manual''.

PART 960—FEDERAL EXECUTIVE BOARDS

65. The authority citation for part 960 continues to read as follows:

Authority: Memorandum of the President for Heads of Departments and Agencies (November 10, 1961).

§ 960.108 [Amended]

66. In § 960.108, remove ''through the Federal Personnel Manual System and other appropriate instruments''.

[FR Doc. 01–31353 Filed 12–26–01; 8:45 am]

BILLING CODE 6325–46–P

DEPARTMENT OF AGRICULTURE

Agricultural Marketing Service

7 CFR Parts 56 and 70

[Docket No. PY–01–005]

RIN 0581–AB99

Increase in Fees and Charges for Egg, Poultry, and Rabbit Grading

AGENCY: Agricultural Marketing Service, USDA.

ACTION: Final rule.

SUMMARY: The Agricultural Marketing Service (AMS) is increasing the fees and charges for Federal voluntary egg, poultry, and rabbit grading. These fees and charges are increased to cover the increase in salaries of Federal employees, salary increases of State employees cooperatively utilized in administering the programs, and other increased Agency costs.

EFFECTIVE DATE: January 1, 2002.

FOR FURTHER INFORMATION CONTACT: David Bowden, Jr., Chief, Standardization Branch, (202) 720–3506.

SUPPLEMENTARY INFORMATION:

Background

The Agricultural Marketing Act (AMA) of 1946 (7 U.S.C. 1621 *et seq.*) authorizes official voluntary grading and certification on a user-fee basis of eggs, poultry, and rabbits. The AMA provides that reasonable fees be collected from users of the program services to cover, as nearly as practicable, the costs of services rendered.

The AMS regularly reviews these programs to determine if fees are adequate and if costs are reasonable. This rule will amend the schedule for fees and charges for grading services rendered to the egg, poultry, and rabbit industries to reflect the costs currently associated with them.

A recent review of the current fee schedule, effective October 1, 2000, revealed that anticipated revenue would not adequately cover increasing program costs. Without a fee increase, FY 2002 revenues for grading services are projected at $24.1 million, costs are projected at $26.0 million, and trust fund balances would be $14.8 million. With a fee increase, FY 2002 revenues are projected at $25.3 million, costs are projected at $26.0 million, and trust fund balances would be $16.0 million.

Employee salaries and benefits account for approximately 81 percent of the total operating budget. A general and locality salary increase for Federal employees, ranging from 3.56 to 4.46 percent, depending on locality, became effective in January 2001 and has materially affected program costs. Another general and locality salary increase estimated at 3.6 percent is expected in January 2002. Also, from October 2000 through September 2001, salaries and fringe benefits of federally licensed State employees will have increased by about 6.0 percent.

The impact of these cost increases was determined for resident, nonresident, and fee services. To offset projected cost increases, the hourly resident and nonresident rate will be increased by approximately 5 percent and the fee rate will be increased by approximately 6 percent. The hourly rate for resident and nonresident service covers graders' salaries and benefits. The hourly rate for fee service covers graders' salaries and benefits, plus the cost of travel and supervision.

Administrative charges that cover the cost of supervision for resident poultry and shell egg grading will also be increased as shown in the table below. Administrative charges for resident rabbit grading and nonresident services will not be changed.

The following table compares current fees and charges with the revised fees and charges for egg, poultry, and rabbit grading as found in 7 CFR parts 56 and 70:

Service	Current	Proposed
Resident Service (egg, poultry, rabbit grading)		
Inauguration of service	310	310
Hourly charges:		
Regular hours	29.96	31.52
Administrative charges—Poultry grading:		
Per pound of poultry	.00035	.00036
Minimum per month	225	250
Maximum per month	2,625	2,650
Administrative charges—Shell egg grading:		
Per 30-dozen case of shell eggs	.044	.046
Minimum per month	225	250
Maximum per month	2,625	2,650
Administrative charges—Rabbit grading:		
Based on 25% of grader's salary		

Service	Current	Proposed
Minimum per month	260	260
Nonresident Service (egg, poultry grading)		
Hourly charges:		
Regular hours	29.96	31.52
Administrative charges:		
Based on 25% of grader's salary		
Minimum per month	260	260
Fee and Appeal Service (egg, poultry, rabbit grading)		
Hourly charges:		
Regular hours	51.32	54.40
Weekend and holiday hours	59.12	62.76

Comments

Based on an analysis of costs to provide these services, a proposed rule to increase the fees for these services was published in the **Federal Register** (66 FR 42456) on August 13, 2001. Comments on the proposed rule were solicited from interested parties until September 12, 2001.

The Agency received one comment during the 30-day comment period from an egg industry association. The association requested that the Agency not implement the fee increase, or delay implementation of the increase, because current economic conditions of the shell egg industry are abysmal. Although the Agency seeks to minimize or negate any fee increases for the poultry, rabbit, and egg grading programs, it must operate these programs on a sound financial basis. Therefore, the Agency must implement these increases, as proposed, to ensure the financial stability of its grading programs.

Executive Order 12866

This action has been determined to be not significant for purposes of Executive Order 12866 and has not been reviewed by the Office of Management and Budget (OMB).

Regulatory Flexibility

Pursuant to the requirements set forth in the Regulatory Flexibility Act (RFA) (5 U.S.C. 601 *et seq.*), the AMS has considered the economic impact of this action on small entities. It is determined that its provisions would not have a significant economic impact on a substantial number of small entities.

There are about 400 users of Poultry Programs' grading services. These official plants can pack eggs, poultry, and rabbits in packages bearing the USDA grade shield when AMS graders are present to certify that the products meet the grade requirements as labeled. Many of these users are small entities under the criteria established by the Small Business Administration (13 CFR 121.201). These entities are under no obligation to use grading services as authorized under the Agricultural Marketing Act of 1946.

The AMS regularly reviews its user fee financed programs to determine if the fees are adequate. The most recent review determined that the existing fee schedule would not generate sufficient revenues to cover program costs while maintaining an adequate reserve balance. Without a fee increase, FY 2002 revenues for grading services are projected at $24.1 million, costs are projected at $26.0 million, and trust fund balances would be $14.8 million. With a fee increase, FY 2002 revenues are projected at $25.3 million, costs are projected at $26.0 million, and trust fund balances would be $16.0 million.

This action will raise the fees charged to users of grading services. The AMS estimates that overall, this rule will yield an additional $1.2 million during FY 2002. The hourly rate for resident and nonresident service will increase by approximately 5 percent and the fee rate will increase by approximately 6 percent. The impact of these rate changes in a poultry plant will range from less than 0.006 to 0.02 cents per pound of poultry handled. In a shell egg plant, the range will be less than 0.028 to 0.033 cents per dozen eggs handled.

Civil Justice Reform

This action has been reviewed under Executive Order 12988, Civil Justice Reform. This action is not intended to have retroactive effect. This rule will not preempt any State or local laws, regulations, or policies, unless they present an irreconcilable conflict with this rule. There are no administrative procedures which must be exhausted prior to any judicial challenge to the provisions of this rule.

Paperwork Reduction

The information collection requirements that appear in the sections to be amended by this action have been previously approved by OMB and assigned OMB Control Numbers under the Paperwork Reduction Act (44 U.S.C. Chapter 35) as follows: § 56.52(a)(4)—No. 0581–0128; and § 70.77(a)(4)—No. 0581–0127.

Pursuant to 5 U.S.C. 553, it is found and determined that good cause exists for not postponing the effective date of the action until 30 days after publication in the **Federal Register**. The revised fees need to be implemented on an expedited basis in order to avoid further financial losses in the grading program. The effective date of the fee increase will be set to coincide with the billing cycle that begins on the first day of the first month after date of publication in the **Federal Register**.

List of Subjects

7 CFR Part 56

Eggs and egg products, Food grades and standards, Food labeling, Reporting and recordkeeping requirements.

7 CFR Part 70

Food grades and standards, Food labeling, Poultry and poultry products, Rabbits and rabbit products, Reporting and recordkeeping requirements.

For reasons set forth in the preamble, Title 7, Code of Federal Regulations, parts 56 and 70 are amended as follows:

PART 56—GRADING OF SHELL EGGS

1. The authority citation for part 56 continues to read as follows:

Authority: 7 U.S.C. 1621–1627.

2. In § 56.46, paragraphs (b) and (c) are revised to read as follows:

§ 56.46 On a fee basis.

(a) * * *

(b) Fees for grading services will be based on the time required to perform the services. The hourly charge shall be $54.40 and shall include the time actually required to perform the grading, waiting time, travel time, and any clerical costs involved in issuing a certificate.

(c) Grading services rendered on Saturdays, Sundays, or legal holidays shall be charged for at the rate of $62.76 per hour. Information on legal holidays is available from the Supervisor.

3. In § 56.52, paragraph (a)(4) is revised to read as follows:

§ 56.52 Continuous grading performed on resident basis.

* * * * *

(a) * * *

(4) An administrative service charge based upon the aggregate number of 30-dozen cases of all shell eggs handled in the plant per billing period multiplied by $0.046, except that the minimum charge per billing period shall be $250 and the maximum charge shall be $2,650. The minimum charge also applies where an approved application is in effect and no product is handled.

PART 70—VOLUNTARY GRADING OF POULTRY PRODUCTS AND RABBIT PRODUCTS

4. The authority citation for part 70 continues to read as follows:

Authority: 7 U.S.C. 1621–1627.

5. In § 70.71, paragraphs (b) and (c) are revised to read as follows:

§ 70.71 On a fee basis.

(a) * * *

(b) Fees for grading services will be based on the time required to perform such services for class, quality, quantity (weight test), or condition, whether ready-to-cook poultry, ready-to-cook rabbits, or specified poultry food products are involved. The hourly charge shall be $54.40 and shall include the time actually required to perform the work, waiting time, travel time, and any clerical costs involved in issuing a certificate.

(c) Grading services rendered on Saturdays, Sundays, or legal holidays shall be charged for at the rate of $62.76 per hour. Information on legal holidays is available from the Supervisor.

6. In § 70.77, paragraph (a)(4) is revised to read as follows:

§ 70.77 Charges for continuous poultry or rabbit grading performed on a resident basis.

* * * * *

(a) * * *

(4) For poultry grading: An administrative service charge based upon the aggregate weight of the total volume of all live and ready-to-cook poultry handled in the plant per billing period computed in accordance with the following: Total pounds per billing period multiplied by $0.00036, except that the minimum charge per billing period shall be $250 and the maximum charge shall be $2,650. The minimum charge also applies where an approved application is in effect and no product is handled.

* * * * *

Dated: December 20, 2001.

A. J. Yates,

Administrator, Agricultural Marketing Service.

[FR Doc. 01–31820 Filed 12–26–01; 8:45 am]

BILLING CODE 3410–02–P

DEFENSE NUCLEAR FACILITIES SAFETY BOARD

10 CFR Part 1707

Testimony by DNFSB Employees and Production of Official Records in Legal Proceedings

AGENCY: Defense Nuclear Facilities Safety Board (DNFSB).

ACTION: Final rule.

SUMMARY: The Defense Nuclear Facilities Safety Board (DNFSB) is implementing procedures governing testimony by DNFSB employees and the production of official records in legal proceedings. This rule sets forth procedures that requesters must follow when making demands or requests to a DNFSB employee to produce official records or information or to provide testimony relating to official information in connection with a legal proceeding in which the DNFSB is not a party. This rule establishes procedures to respond to such demands and requests in an orderly and consistent manner. This rule, among other benefits, promotes uniformity in decisions, protects confidential information, provides guidance to requesters, and reduces the potential for both inappropriate disclosures of official information and wasteful allocation of agency resources.

EFFECTIVE DATE: January 28, 2002.

FOR FURTHER INFORMATION CONTACT: Richard A. Azzaro, General Counsel, Defense Nuclear Facilities Safety Board, 625 Indiana Avenue, NW., Suite 700, Washington, DC 20004–2901, telephone: 202–694–7062; FAX: 202–208–6518.

SUPPLEMENTARY INFORMATION:

Background

On November 14, 2001, DNFSB published in the **Federal Register** a notice of proposed rulemaking proposing to establish procedures governing testimony by DNFSB employees and the production of official records in legal proceedings to which DNFSB is not a party (66 FR 57003–57007). This rule establishes a new part 1707 of our regulations, which sets forth the DNFSB rules for responding to requests for information, records, or testimony in legal proceedings.

The Defense Nuclear Facilities Safety Board may receive subpoenas and requests for DNFSB employees to provide evidence in litigation in which the DNFSB is not a party. These subpoenas and requests may also be for DNFSB records that are not available to the public under the Freedom of Information Act. Also, DNFSB could receive subpoenas or requests for DNFSB employees to appear as witnesses in litigation in conjunction with a request for nonpublic records.

Responding to such demands and requests could divert DNFSB resources from their congressionally mandated functions. This regulation will ensure a more efficient use of DNFSB resources, minimize the possibility of involving DNFSB in issues unrelated to its responsibilities, promote uniformity in responding to such requests and subpoenas, and maintain impartiality of DNFSB in matters that are in dispute between other parties. It also serves DNFSB's duty to protect sensitive, confidential, and privileged information and records.

This rule, issued under the authority of 5 U.S.C. 301, is similar to rules issued by numerous Government agencies and departments. Section 301 of Title 5, the ''housekeeping statute,'' authorizes the head of an executive agency to issue ''regulations for the government of his department, the conduct of its employees, the distribution and performance of its business, and the custody, use, and preservation of its records, papers, and property.'' In *United States ex rel. Touhy* v. *Ragen,* 340 U.S. 462 (1951), the Supreme Court upheld the authority of Federal agencies to establish procedures pursuant to section 301 similar to those established here. Federal courts have consistently held that a person seeking testimony or records from an agency must comply with the agency's ''Touhy regulation'' before seeking judicial enforcement of a subpoena. In addition, under section 2286b of the enabling statute of the Defense Nuclear Facilities Safety Board, 42 U.S.C. 2286 et seq., the DNFSB has

authority to promulgate regulations necessary to the efficient administration of the DNFSB functions.

In the notice of proposed rulemaking published in the **Federal Register** on November 14, 2001, the DNFSB requested comments by December 14, 2001. DNFSB received no comments on the proposed rule.

Explanation of Final Rule

This rule establishes DNFSB policies and procedures applicable to requests for official agency information, records, or testimony in legal proceedings.

Scope

This rule will prohibit disclosure of nonpublic official records or testimony by DNFSB employees unless authorization is provided pursuant to this rule (sections 1707.201 and 1707.203). This rule identifies the factors that DNFSB will consider in making determinations in response to such requests and what information requesters must provide (sections 1707.202 and 1707.203). This rule also specifies when the request should be submitted (section 1707.203), the time period for review (section 1707.205), potential fees (section 1707.301), and, if a request is granted, any restrictions that may be placed on the disclosure of records or the appearance of a DNFSB employee as a witness (sections 1707.207 and 1707.208).

This rule applies to a broad range of matters in any legal proceeding in which DNFSB is not a named party. It also applies to former and current DNFSB employees (as well as DNFSB consultants and advisors). Former employees are prohibited from testifying about specific matters for which they had responsibility during their active employment unless permitted to testify as provided in the proposed rule. They would not be barred from appearing to testify about general matters unconnected with the specific matters for which they had responsibility.

Certification

DNFSB will certify that records in DNFSB's possession as true copies in order to facilitate their use as evidence.

Fees

We charge a fee for production of records or information and certification. The fee schedules for duplication are the same as those established in 10 CFR 1703.107(b)(6) of the Board's regulations, as appropriate. The charges for witnesses are the same as those provided by the Federal courts. The fees related to production of records are the same as those charged under FOIA. The charges for time spent by an employee to prepare for testimony and for certification of records by DNFSB are authorized under 31 U.S.C. 9701, which permits an agency to charge for services or things of value that are provided by the agency.

Procedural Nature of the Regulations

The DNFSB rule is internal to the agency, and is essentially procedural, not substantive. It does not create a right to obtain official records or the testimony of a DNFSB employee nor does it create any additional right or privilege not already available to DNFSB to deny any demand or request therefor. However, failure to comply with the procedures in this rule would be a basis for denying a demand or request submitted to DNFSB.

Regulatory Procedures

Regulatory Flexibility Act

For purposes of the Regulatory Flexibility Act (5 U.S.C. chapter 6), this rule will not have a significant economic impact on a substantial number of small entities. The rule addresses only the procedures to be followed in the production or disclosure of DNFSB materials and information in litigation where DNFSB is not a party. Accordingly, DNFSB has determined that a Regulatory Flexibility Analysis is not required.

Unfunded Mandates Reform Act

For purposes of the Unfunded Mandates Reform Act of 1995 (2 U.S.C. chapter 25, subchapter II), this rule would not significantly or uniquely affect small governments and would not result in increased expenditures by State, local, and tribal governments, in the aggregate, or by the private sector, of $100 million or more (as adjusted for inflation).

Executive Order 12866

In issuing this regulation, the Defense Nuclear Facilities Safety Board has adhered to the regulatory philosophy and the applicable principles of regulation as set forth in section 1 of Executive Order 12866, Regulatory Planning and Review. This rule has not been reviewed by the Office of Management and Budget under that Executive Order since it is not a significant regulatory action within the meaning of the Executive Order.

Executive Order 12988

The Defense Nuclear Facilities Safety Board, has reviewed this regulation in light of section 3 of Executive Order 12988, Civil Justice Reform, and certifies that it meets the applicable standards provided therein.

Paperwork Reduction Act

The Paperwork Reduction Act (44 U.S.C. chapter 35) does not apply because this regulation does not contain information collection requirements that require approval by the Office of Management and Budget. The Defense Nuclear Facilities Safety Board expects the collection of information that is called for by the regulation would involve fewer than ten persons each year.

Congressional Review Act

The Defense Nuclear Facilities Safety Board has determined that this rulemaking does not involve a rule within the meaning of the Congressional Review Act (5 U.S.C. chapter 8).

List of Subjects in 10 CFR Part 1707

Administrative practice and procedure, Conflict of interests, Courts, Government employees, Records, Subpoenas, Testimony.

Dated: December 18, 2001.

John T. Conway,

Chairman, Defense Nuclear Facilities Safety Board.

Accordingly, for the reasons set forth in the preamble, the Defense Nuclear Facilities Safety Board adds a new part 1707 to 10 CFR chapter XVII to read as follows:

PART 1707—TESTIMONY BY DNFSB EMPLOYEES AND PRODUCTION OF OFFICIAL RECORDS IN LEGAL PROCEEDINGS

Subpart A—General Provisions

Sec.
1707.101 Scope and purpose.
1707.102 Applicability.
1707.103 Definitions.

Subpart B—Requests for Testimony and Production of Documents

1707.201 General prohibition.
1707.202 Factors DNFSB will consider.
1707.203 Filing requirements for demands or requests for documents or testimony.
1707.204 Service of subpoenas or requests.
1707.205 Processing demands or requests.
1707.206 Final determination.
1707.207 Restrictions that apply to testimony.
1707.208 Restrictions that apply to released records.
1707.209 Procedure when a decision is not made prior to the time a response is required.
1707.210 Procedure in the event of an adverse ruling.

Subpart C—Schedule of Fees

1707.301 Fees.

Subpart D—Penalties

1707.401 Penalties.

Authority: 42 U.S.C. 2286b(c); 44 U.S.C. 3101–3107, 3301–3303a, 3308–3314.

Subpart A—General Provisions

§ 1707.101 Scope and purpose.

(a) This part sets forth policies and procedures you must follow when you submit a demand or request to an employee of the Defense Nuclear Facilities Safety Board (DNFSB) to produce official records and information, or provide testimony relating to official information, in connection with a legal proceeding. You must comply with these requirements when you request the release or disclosure of official records and information.

(b) The Defense Nuclear Facilities Safety Board intends these provisions to:

(1) Promote economy and efficiency in its programs and operations;

(2) Minimize the possibility of involving DNFSB in controversial issues not related to our functions;

(3) Maintain DNFSB's impartiality among private litigants where DNFSB is not a named party; and

(4) Protect sensitive, confidential information and the deliberative processes of DNFSB.

(c) In providing for these requirements, DNFSB does not waive the sovereign immunity of the United States.

(d) This part provides guidance for the internal operations of DNFSB. It does not create any right or benefit, substantive or procedural, that a party may rely upon in any legal proceeding against the United States.

§ 1707.102 Applicability.

This part applies to demands and requests to employees for factual, opinion, or expert testimony relating to official information, or for production of official records or information, in legal proceedings whether or not the United States or the DNFSB is a named party. However, it does not apply to:

(a) Demands upon or requests for a DNFSB employee to testify as to facts or events that are unrelated to his or her official duties or that are unrelated to the functions of DNFSB;

(b) Demands upon or requests for a former DNFSB employee to testify as to matters in which the former employee was not directly or materially involved while at the DNFSB;

(c) Requests for the release of records under the Freedom of Information Act, 5 U.S.C. 552, or the Privacy Act, 5 U.S.C. 552a; and

(d) Congressional demands and requests for testimony or records.

§ 1707.103 Definitions.

DNFSB means the Defense Nuclear Facilities Safety Board.

DNFSB employee or employee means:

(1) Any current or former officer or employee of DNFSB;

(2) Any contractor or contractor employee working on behalf of the DNFSB or who has performed services for DNFSB; and

(3) Any individual who is serving or has served in any advisory capacity to DNFSB, whether formal or informal.

(4) Provided, that this definition does not include persons who are no longer employed by DNFSB and who are retained or hired as expert witnesses or who agree to testify about general matters, matters available to the public, or matters with which they had no specific involvement or responsibility during their employment with DNFSB.

Demand means a subpoena, or an order or other demand of a court or other competent authority, for the production, disclosure, or release of records or for the appearance and testimony of a DNFSB employee that is issued in a legal proceeding.

General Counsel means the General Counsel of DNFSB or a person to whom the General Counsel has delegated authority under this part.

Legal proceeding means any matter before a court of law, administrative board or tribunal, commission, administrative law judge, hearing officer, or other body that conducts a legal or administrative proceeding. Legal proceeding includes all phases of litigation.

Records or official records and information mean:

(1) All documents and materials which are DNFSB agency records under the Freedom of Information Act, 5 U.S.C. 552;

(2) All other documents and materials contained in DNFSB files; and

(3) All other information or materials acquired by a DNFSB employee in the performance of his or her official duties or because of his or her official status.

Request means any formal or informal request, by whatever method, for the production of records and information or for testimony which has not been demanded by a court or other competent authority.

Testimony means any written or oral statements, including but not limited to depositions, answers to interrogatories, affidavits, declarations, interviews, and statements made by an individual in connection with a legal proceeding.

Subpart B—Requests for Testimony and Production of Documents

§ 1707.201 General prohibition.

No employee may produce official records and information or provide any testimony relating to official information in response to a demand or request without the prior, written approval of the General Counsel.

§ 1707.202 Factors DNFSB will consider.

The General Counsel, in his or her sole discretion, may grant an employee permission to testify on matters relating to official information, or produce official records and information, in response to a demand or request. Among the relevant factors that the General Counsel may consider in making this decision are whether:

(a) The purposes of this part are met;

(b) Allowing such testimony or production of records would be necessary to prevent a miscarriage of justice;

(c) DNFSB has an interest in the decision that may be rendered in the legal proceeding;

(d) Allowing such testimony or production of records would assist or hinder DNFSB in performing its statutory duties or use DNFSB resources where responding to the request will interfere with the ability of DNFSB employees to do their work;

(e) Allowing such testimony or production of records would be in the best interest of DNFSB or the United States;

(f) The records or testimony can be obtained from other sources;

(g) The demand or request is unduly burdensome or otherwise inappropriate under the applicable rules of discovery or the rules of procedure governing the case or matter in which the demand or request arose;

(h) Disclosure would violate a statute, executive order or regulation;

(i) Disclosure would reveal confidential, sensitive, or privileged information, trade secrets or similar, confidential commercial or financial information, or otherwise protected information, or would otherwise be inappropriate for release;

(j) Disclosure would impede or interfere with an ongoing law enforcement investigation or proceedings;

(k) Disclosure would compromise constitutional rights;

(l) Disclosure would result in DNFSB appearing to favor one litigant over another;

(m) Disclosure relates to documents that were produced by another agency;

(n) A substantial Government interest is implicated;

(o) The demand or request is within the authority of the party making it; and

(p) The demand or request is sufficiently specific to be answered.

§ 1707.203 Filing requirements for demands or requests for documents or testimony.

You must comply with the following requirements whenever you issue demands or requests to a DNFSB employee for official records, information, or testimony.

(a) Your request must be in writing and must be submitted to the General Counsel. If you serve a subpoena on DNFSB or a DNFSB employee before submitting a written request and receiving a final determination, DNFSB will oppose the subpoena on grounds that your request was not submitted in accordance with this subpart.

(b) Your written request must contain the following information:

(1) The caption of the legal proceeding, docket number, and name and address of the court or other authority involved;

(2) A copy of the complaint or equivalent document setting forth the assertions in the case and any other pleading or document necessary to show relevance of the testimony, records, or information you seek from the DNFSB;

(3) A list of categories of records sought, a detailed description of how the information sought is relevant to the issues in the legal proceeding, and a specific description of the substance of the testimony or records sought;

(4) A statement as to how the need for the information outweighs the need to maintain any confidentiality of the information and outweighs the burden on DNFSB to produce the records or provide testimony;

(5) A statement indicating that the information sought is not available from another source, from other persons or entities, or from the testimony of someone other than a DNFSB employee, such as a retained expert;

(6) If testimony is requested, the intended use of the testimony, a general summary of the desired testimony, and a showing that no document could be provided and used in lieu of testimony;

(7) A description of all prior decisions, orders, or pending motions in the case that bear upon the relevance of the requested records or testimony;

(8) The name, address, and telephone number of counsel to each party in the case; and

(9) An estimate of the amount of time that the requester and other parties will require with each DNFSB employee for time spent by the employee to prepare for testimony, in travel, and for attendance in the legal proceeding.

(c) The Defense Nuclear Facilities Safety Board reserves the right to require additional information to complete your request where appropriate.

(d) Your request should be submitted at least 45 days before the date that records or testimony is required. Requests submitted in less than 45 days before records or testimony is required must be accompanied by a written explanation stating the reasons for the late request and the reasons for expedited processing.

(e) Failure to cooperate in good faith to enable the General Counsel to make an informed decision may serve as the basis for a determination not to comply with your request.

§ 1707.204 Service of subpoenas or requests.

Subpoenas or requests for official records or information or testimony must be served on the General Counsel, Defense Nuclear Facilities Safety Board, 625 Indiana Avenue, NW., Suite 700, Washington, DC 20004–2901.

§ 1707.205 Processing demands or requests.

(a) After service of a demand or request to testify, the General Counsel will review the demand or request and, in accordance with the provisions of this subpart, determine whether, or under what conditions, to authorize the employee to testify on matters relating to official information and/or produce official records and information.

(b) The Defense Nuclear Facilities Safety Board will process requests in the order in which they are received. Absent exigent or unusual circumstances, DNFSB will respond within 45 days from the date that we receive it. The time for response will depend upon the scope of the request.

(c) The General Counsel may grant a waiver of any procedure described by this subpart where a waiver is considered necessary to promote a significant interest of the DNFSB or the United States or for other good cause.

§ 1707.206 Final determination.

The General Counsel makes the final determination on demands and requests to employees for production of official records and information or testimony. All final determinations are within the sole discretion of the General Counsel. The General Counsel will notify the requester and the court or other authority of the final determination, the reasons for the grant or denial of the demand or request, and any conditions that the General Counsel may impose on the release of records or information, or on the testimony of a DNFSB employee.

§ 1707.207 Restrictions that apply to testimony.

(a) The General Counsel may impose conditions or restrictions on the testimony of DNFSB employees including, for example, limiting the areas of testimony or requiring the requester and other parties to the legal proceeding to agree that the transcript of the testimony will be kept under seal or will only be used or made available in the particular legal proceeding for which testimony was requested. The General Counsel may also require a copy of the transcript of testimony at the requester's expense.

(b) The DNFSB may offer the employee's written declaration in lieu of testimony.

(c) If authorized to testify pursuant to this part, an employee may testify as to facts within his or her personal knowledge, but, unless specifically authorized to do so by the General Counsel, the employee shall not:

(1) Disclose classified, privileged, or otherwise protected information;

(2) Testify as an expert or opinion witness with regard to any matter arising out of the employee's official duties or the functions of DNFSB unless testimony is being given on behalf of the United States (see also 5 CFR 2635.805 for current employees).

§ 1707.208 Restrictions that apply to released records.

(a) The General Counsel may impose conditions or restrictions on the release of official records and information, including the requirement that parties to the proceeding obtain a protective order or execute a confidentiality agreement to limit access and any further disclosure. The terms of the protective order or of a confidentiality agreement must be acceptable to the General Counsel. In cases where protective orders or confidentiality agreements have already been executed, DNFSB may condition the release of official records and information on an amendment to the existing protective order or confidentiality agreement.

(b) If the General Counsel so determines, original DNFSB records may be presented for examination in response to a demand or request, but they are not to be presented as evidence or otherwise used in a manner by which they could lose their identity as official DNFSB records, nor are they to be marked or altered. In lieu of the original records, certified copies will be

presented for evidentiary purposes (see 28 U.S.C. 1733).

§ 1707.209 Procedure when a decision is not made prior to the time a response is required.

If a response to a demand or request is required before the General Counsel can make the determination referred to in § 1707.201, the General Counsel, when necessary, will provide the court or other competent authority with a copy of this part, inform the court or other competent authority that the demand or request is being reviewed, and seek a stay of the demand or request pending a final determination.

§ 1707.210 Procedure in the event of an adverse ruling.

If the court or other competent authority fails to stay the demand, the employee upon whom the demand is made, unless otherwise advised by the General Counsel, will appear at the stated time and place, produce a copy of this part, state that the employee has been advised by counsel not to provide the requested testimony or produce documents, and respectfully decline to comply with the demand, citing *United States ex rel. Touhy* v. *Ragen,* 340 U.S. 462 (1951). A written response may be offered to a request, or to a demand, if permitted by the court or other competent authority.

Subpart C—Schedule of Fees

§ 1707.301 Fees.

(a) Generally. The General Counsel may condition the production of records or appearance for testimony upon advance payment of a reasonable estimate of the costs to DNFSB.

(b) Fees for records. Fees for producing records will include fees for searching, reviewing, and duplicating records, costs of attorney time spent in reviewing the demand or request, and expenses generated by materials and equipment used to search for, produce, and copy the responsive information. Costs for employee time will be calculated on the basis of the hourly pay of the employee (including all pay, allowance, and benefits). Fees for duplication will be the same as those charged by DNFSB in its Freedom of Information Act fee regulations at 10 CFR part 1703.

(c) Witness fees. Fees for attendance by a witness will include fees, expenses, and allowances prescribed by the court's rules. If no such fees are prescribed, witness fees will be determined based upon the rule of the Federal district court closest to the location where the witness will appear. Such fees will include cost of time spent by the witness to prepare for testimony, in travel, and for attendance in the legal proceeding.

(d) Payment of fees. You must pay witness fees for current DNFSB employees and any records certification fees by submitting to the General Counsel a check or money order for the appropriate amount made payable to the Treasury of the United States. In the case of testimony by former DNFSB employees, you must pay applicable fees directly to the former employee in accordance with 28 U.S.C. 1821 or other applicable statutes.

(e) Certification (authentication) of copies of records. The Defense Nuclear Facilities Safety Board may certify that records are true copies in order to facilitate their use as evidence. If you seek certification, you must request certified copies from DNFSB at least 45 days before the date they will be needed. The request should be sent to the General Counsel. You will be charged a certification fee of $15.00 for each document certified.

(f) Waiver or reduction of fees. The General Counsel, in his or her sole discretion, may, upon a showing of reasonable cause, waive or reduce any fees in connection with the testimony, production, or certification of records.

(g) De minimis fees. Fees will not be assessed if the total charge would be $10.00 or less.

Subpart D—Penalties

§ 1707.401 Penalties.

(a) An employee who discloses official records or information or gives testimony relating to official information, except as expressly authorized by DNFSB or as ordered by a Federal court after DNFSB has had the opportunity to be heard, may face the penalties provided in 18 U.S.C. 641 and other applicable laws. Additionally, former DNFSB employees are subject to the restrictions and penalties of 18 U.S.C. 207 and 216.

(b) A current DNFSB employee who testifies or produces official records and information in violation of this part shall be subject to disciplinary action.

[FR Doc. 01–31533 Filed 12–26–01; 8:45 am]

BILLING CODE 3670–01–P

FEDERAL HOUSING FINANCE BOARD

12 CFR Parts 930 and 932

[No. 2001–28]

RIN 3069–AB11

Unsecured Credit Limits for Federal Home Loan Banks

AGENCY: Federal Housing Finance Board.

ACTION: Final rule.

SUMMARY: The Federal Housing Finance Board (Finance Board) is amending the unsecured credit provision of its rules, which was adopted as part of its capital rule on December 20, 2000 and governs the amount of unsecured credit that a Federal Home Loan Bank (Bank) can extend to a particular counterparty. The unsecured credit limits adopted in December were generally stricter than the limits under which the Banks operated with the Finance Board's Financial Management Policy (FMP). The amendments adopted herein will require the Banks to base the credit limit on the long-term credit rating of the counterparty. They also will set the amount of unsecured credit that a Bank can extend to a government-sponsored enterprise (GSE) at the level allowed under the FMP, and adjust the limits for sales of overnight federal funds and the limits for unsecured credit that can be extended to groups of affiliated counterparties. The amendments also address how the unsecured credit limits should be applied to certain housing finance agency bonds, and clarify how a Bank should calculate its credit exposures from on- and off-balance sheet items and derivative contracts. The Finance Board also is adding to § 932.9 a requirement that a Bank report promptly non-compliance with the unsecured credit limits set forth in the rule as well as making other technical or clarifying changes to the rule.

EFFECTIVE DATE: The final rule is effective on March 27, 2002.

FOR FURTHER INFORMATION CONTACT: James L. Bothwell, Managing Director, (202) 408–2821; Scott L. Smith, Acting Director, (202) 408–2991; or Julie Paller, Senior Financial Analyst, (202) 408–2842, Office of Policy, Research and Analysis; or Thomas E. Joseph, Senior Attorney-Advisor, (202) 408–2512, Office of General Counsel, Federal Housing Finance Board, 1777 F Street, NW., Washington, DC 20006.

SUPPLEMENTARY INFORMATION:

I. Introduction

On December 20, 2000, in accordance with the Gramm-Leach-Bliley Act, Pub.

L. No. 106–102, 133 Stat. 1338 (November 12, 1999) (GLB Act), the Finance Board adopted a final rule to implement the new capital structure that the GLB Act established for the Banks. 66 FR 8262 (January 30, 2001). As part of the final capital rule, the Finance Board adopted § 932.9 of its rules, 12 CFR 932.9, which set new limits on a Bank's unsecured credit exposures to a single counterparty or a group of affiliated counterparties. *Id.* at 8318–19. These new limits represented a revision and codification of the unsecured credit guidelines of section VI of the FMP, Finance Board Res. No. 96–45 (July 3, 1996), as amended by Finance Board Res. No. 96–90 (December 6, 1996), Finance Board Res. No. 97–05 (January 14, 1997), and Finance Board Res. No. 97–86 (December 17, 1997). Given concerns raised by the Banks about the unsecured limits adopted in December 2000, the Finance Board delayed the effective date of these requirements on the condition that the FMP restrictions remained in effect, and, on March 7, 2001, published a proposed rule requesting comment on potential amendments to the unsecured credit requirements. *See* 66 FR 13688 (Mar. 7, 2001).

After considering comments on this rule proposal, the Finance Board believed more changes were needed than those it had previously considered and, as a consequence, published for comment in the **Federal Register** a new set of proposed amendments to § 932.9 on August 8, 2001 (the proposed rule). *See* 66 FR 41474 (Aug. 8, 2001). The Finance Board also again extended the effective date for compliance with § 932.9 subject to the condition that section VI of the FMP remained in effect. *Id.* at 41475. The comment period on the second proposed rule closed on September 7, 2001. After considering the comments received, the Finance Board has made a number of changes to the rule proposed in August 2001, and is adopting an amended version of § 932.9, as discussed below.

II. Discussion of the Comments Received

The Finance Board received seven comment letters on the proposed rule, all of which were from Banks. Two commenters submitted follow-up comment letters to the Finance Board, after the close of the comment period. Nevertheless, these follow-up letters were considered in developing this rule. The comments requested both changes to the proposed rule and amendments and clarifications of how the proposed rule would be applied. The Finance Board agrees with many of the comments made, and as a result has made a number of changes to the proposed rule. The Finance Board addresses the comments received on its proposed changes to § 932.9 below.

Effective Date of Rule

Four of the commenters requested that the Finance Board delay the effective date of § 932.9, which had been scheduled to take effect on October 1, 2001 or on the date the proposed rule was adopted in final form, whichever was earlier. *See* Fin. Brd. Res. No. 2001–11 (June 5, 2001). The commenters suggested that the effective date of the rule be set at various dates that ranged from three to six months after a final rule had been published. The commenters stated that the extension was necessary to give the Banks sufficient time to conform recordkeeping and reporting systems to whatever limits were ultimately adopted by the Finance Board.

The Finance Board generally agrees with these comments. On September 26, 2001, it extended the effective date of § 932.9 until January 28, 2002 to provide sufficient time to complete the rulemaking process. *See* Fin. Brd. Res. No. 2001–20 (Sept. 26, 2001). However, given the date of approval of these final rule amendments, the Banks will have less than ninety days to prepare for implementing the amended version of § 932.9 adopted herein if the January 28, 2002 date for complying with § 932.9 is not changed.[1] Thus, the Finance Board is also adopting separate from these rule amendments, a resolution that delays the date for complying with § 932.9 until the effective date of these final rule amendments. This new effective date will be 90 days from the date this final rule is published in the **Federal Register**.[2] The delay in the effective date is conditioned upon the Banks' continued compliance with the unsecured credit limits in section VI of the FMP. The Finance Board believes that this time frame should be sufficient for the Banks to conform their recordkeeping and reporting systems to the rule as amended.

General Approach

The proposed rule would have required a Bank to determine the applicable maximum capital exposure limits for a particular counterparty based on the long-term credit rating received by that counterparty from an organization regarded as a Nationally Recognized Statistical Rating Organization (NRSRO) by the Securities and Exchange Commission, except in certain limited circumstances. The proposed amendment represented a change from the approach adopted in December 2000 which required a Bank to determine the maximum capital exposure limit for a short-term credit based on an NRSRO's short-term credit rating for the counterparty and to determine the maximum capital exposure limit for a long-term credit based on an NRSRO's long-term credit rating for the counterparty. Under the proposed rule (as under the rule adopted in December 2000), the unsecured credit limit for a particular counterparty (subject to certain exceptions set forth in the rule) would equal the maximum capital exposure limit for that counterparty multiplied by the lesser of the Bank's total capital or the counterparty's Tier 1 or total capital.

Two commenters objected to the reliance on long-term credit ratings, as proposed. The commenters argued that short-term credit exposures presented a markedly different credit risk to a Bank than would a long-term exposure to the same counterparty, and that by disregarding short-term ratings, the Finance Board was ignoring important information about a counterparty embodied in that rating. The commenters also believed that the proposed approach would greatly restrict the amount of unsecured credit a Bank could provide from levels permitted under the FMP or under § 932.9 as adopted in December 2000. One commenter stated that this reduction would force the Banks to seek lower-rated counterparties and increase the term of their lending, thereby raising overall credit risk. The other commenter stated the proposed change, if adopted, would reduce the amount of unsecured credit that a Bank would have available to its members, which may result in membership becoming less attractive to some institutions.

Given these concerns, one commenter urged the Finance Board not to adopt the proposed change and continue to base unsecured credit limits for short-term exposures on short-term credit ratings. The other commenter suggested the Finance Board provide the Banks the option of using short-term credit

[1] Further, the Finance Board recognizes that given the large number of amendments adopted by this rulemaking, it would serve no purpose to require the Banks to implement § 932.9, as adopted in December 2000, on January 28, 2002, and then implement this amended version of the rule soon thereafter. It is more reasonable to continue to apply the current unsecured credit restrictions of section VI of the FMP to the Banks until section VI of the FMP is superceded by the amended version § 932.9.

[2] The Finance Board is also extending the effective date for the liquidity requirements set forth in § 932.8 so that both the amended unsecured credit limits and the new liquidity requirements will take effect on the same day.

ratings. The second commenter also urged the Finance Board to develop new short- and long-term limits and a new total limit which would be the sum of the short- and long-term limits plus capacity for additional overnight lending.

A third commenter believed that it was inappropriate to use the counterparty's capital as a basis for setting the unsecured credit limits because this approach could result in unduly large Bank System-wide unsecured credit exposures to a counterparty in relation to that counterparty's total assets. The commenter urged the Finance Board to set the unsecured credit limits at the lesser of a percentage of a Bank's total capital or a counterparty's total assets.

The Finance Board has considered these comments but has decided not to make any changes to the proposed rule in response. In the **SUPPLEMENTARY INFORMATION** section of the **Federal Register** proposing release for this rule, the Finance Board noted three reasons to require the Banks to determine the applicable maximum capital exposure limit based solely a counterparty's long-term credit rating. First, the Finance Board stated that the reliance on long-term credit ratings was consistent with the approach being suggested by the Basel Committee on Banking Supervision (Basel Committee) for establishing risk-weightings under its standardized approach in the proposed New Capital Accord, which generally proposes using long-term ratings assigned by rating agencies (*i.e.,* NRSROs) and disregarding the maturity of a credit in setting risk weightings. *See* 66 FR at 41479–80 (*citing* Basel Committee, ''A New Capital Adequacy Framework'' 26–36 (June 1999); and Basel Committee, ''Overview of the New Basel Accord'' 13–14 (Jan. 2000)).[3] Second, the Finance Board noted that parties that would be assigned the same short-term credit rating may have markedly different maximum 30-day default rates, depending on a party's long-term credit rating, so that use of long-term ratings would assure more restrictive limits were imposed on borrowers with the higher maximum 30-day default rate. 66 FR at 41480. Finally, the Finance Board stated that exclusive reliance on long-term credit ratings for determining the maximum exposure limits would simplify the Banks' monitoring of their counterparties' ratings. *Id.*

The comments received do not alter the Finance Board's basic reasoning for proposing exclusive use of long-term credit ratings to determine the maximum capital exposure limit applicable to a counterparty. In this regard, the Finance Board emphasizes that its approach is consistent with the standardized approach being proposed by the Basel Committee in the New Capital Accord for establishing risk weightings. The Basel Committee decided generally to ignore maturity of claims in establishing risk weighting in large part because of ''the difficulties in pursuing greater precision in differentiating among the maturities of claims through capital charges'' and the ''broad brush'' nature of the proposed capital requirements. *See* Basel Committee, ''A New Capital Adequacy Framework'' at 33. The same reasoning can be applied to the unsecured credit limits being adopted herein, especially given that the credit limits are designed to provide a broad framework to prevent concentration of credit in single counterparties or groups of affiliated counterparties and not to differentiate with precision the risks of lending to particular counterparties. *See* 66 FR at 8302 (explaining reasoning for adopting § 932.9).

The Finance Board also disagrees with the suggestions of the one commenter that the unsecured credit limits will create more risk by lowering the quality of the Bank's credit portfolios. The unsecured credit limits adopted herein are themselves restrictive as to the amounts of credit that can be lent to lower rated counterparties. At the same time, before undertaking any significant lending or investment activity that was not allowed under the FMP, a Bank will first have to demonstrate pursuant to part 980 of the Finance Board rules, 12 CFR part 980, that it is able to undertake the new lending in a safe and sound manner. In addition, the lending undertaken by a Bank will eventually be subject to the capital requirements of part 932 of the Finance Board rules, helping to assure a Bank holds sufficient capital if it is indeed engaging in lending to lower quality counterparties. Even before the requirements of part 932 become effective, however, a Bank will be subject to the capital requirements set forth in § 956.4 of the Finance Board rules, 12 CFR 956.4, if the Bank undertakes unsecured transactions with any counterparty rated below the second highest credit rating by an NRSRO. Further, with regard to the second commenter's concern about unsecured lending to members, the unsecured credit rules will not in any way limit a Bank's ability to continue to provide liquidity to members using short-term advances.

The Finance Board also continues to believe that it is appropriate to base the unsecured credit limits on the lesser of the capital of the Bank or the capital of the counterparty rather than adopt the commenter's suggestion of using a percentage of a counterparty's assets. The approach adopted herein addresses the Finance Board's concerns with potential concentrations of unsecured credit as a percentage of Bank capital on both the individual Bank and Bank System level. *See* 66 FR at 8302. The approach also is relatively straightforward to implement so the Finance Board sees no reason to alter it in response to the commenter's concerns.

Further, basing the limit on a percentage of counterparty assets rather than counterparty capital would result in higher limits as a percentage of counterparty capital for counterparties with lower capital ratios. For example, two counterparties with the same credit rating and same amount of total assets would be subject to the same limit. If one of the two has a lower capital ratio than the other, however, the Bank's lending to the less capitalized counterparty could equal a higher percentage of that counterparty's capital (*i.e.,* the limit as a percentage of capital would be higher). Because capital serves as a cushion against loss, this methodology suggested by the commenter would allow the Bank a higher exposure relative to capital to the less-capitalized counterparty and provide less protection against potential losses. Thus, the Finance Board believes that limiting extensions of unsecured credit to a percent of capital is the more appropriate methodology.

Overnight Federal Funds Transactions

The proposed rule would have amended § 932.9 to require a Bank to meet two unsecured credit limits for each private counterparty. The first, the term limit, would have applied to all unsecured credit transactions except sales of federal funds with a maturity of one day or less or sales of federal funds subject to a continuing contract (together ''overnight federal funds''). The term limit for a particular counterparty equaled the maximum capital exposure limit times the lesser of the Bank's total capital or the appropriate measure of the counterparty's capital. The second limit, the overall limit, would have applied to all transactions with a particular

[3] *See also,* Basel Committee, ''Consultative Document: The new Basel Capital Accord'' 14–15 (Jan. 2001) (''if there is a long-term issue or issuer assessment [*i.e.,* rating], that assessment should be used not only for long-term claims but also for short-term claims, regardless of the availability of a short-term assessment * * *).

counterparty including any overnight federal funds transactions. The overall limit for a particular counterparty equaled twice the counterparty's term limit.

The Finance Board received two comments on this proposed amendment. One commenter felt that the special treatment afforded overnight Federal Funds transactions by the proposed amendment offered only limited relief to, what the commenter believed were, the unnecessarily restrictive limits of § 932.9. This commenter urged the Finance Board to exclude all overnight federal funds transactions from the unsecured credit limits, or in the alternative, to allow a flat 15 percent of capital add-on to the term limit for overnight federal funds transactions for counterparties with the highest short-term rating and at least the third highest long-term rating. The commenter argued that the ''funding advantage'' that may be enjoyed by the Banks, which the commenters viewed as the reason the Finance Board failed to exclude all overnight federal funds transactions from the rule, was a myth, noting that if such an advantage existed, depository institutions would get most of their funds from the Banks. The commenter also pointed out that given the low spread on advances, the Banks needed to maintain leverage through short-term investments such as selling overnight federal funds. More generally, the commenter believed that the Finance Board's ''conservative'' approach to the unsecured credit limits was inconsistent with the GLB Act because the GLB Act made clear that the Finance Board's responsibility was safety and soundness regulation and not management of the Banks. The other commenter on the proposed amendment recommended that the Finance Board apply the proposed special limits only to overnight investment transactions between a Bank and a member institution, and that the Finance Board include in the overall limit all types of unsecured overnight transactions, not just overnight federal funds transactions.

As the Finance Board has previously stated, it adopted the unsecured credit limits as a safety and soundness regulation to prevent undue concentrations of credit in a single counterparty or groups of affiliated counterparties. *See* 66 FR at 8301–02. Other banking regulators have similar limits in effect.[4] These types of regulations also are consistent with practices for sound management of credit risk as articulated by the Basel Committee. *See* Basel Committee, ''Principles for Management of Credit Risk'' 10 (Sept. 2000). Thus, the Finance Board is confident that these regulations are consistent with its obligations and authority to ensure that the Banks operate in a financially safe and sound manner, and are not inconsistent with the GLB Act or the Bank Act more generally. *See* 12 U.S.C. 1422a(a)3 and 1422b.

Further, as noted in the **SUPPLEMENTARY INFORMATION** section of the preamble of the proposed rule, the Finance Board considered excluding overnight federal funds transactions from its unsecured credit limits because other banking regulators excluded these transactions from their lending limits. *See* 66 FR at 41476. The Finance Board also noted that the Banks have different incentives than commercial depository institutions to lend into the federal funds markets. The differing incentives include both the funding advantage enjoyed by GSEs in borrowing and the more varied lending and investment opportunities available to commercial banking enterprises which reduces these institutions' incentives to engage in federal funds lending. *Id.* The Finance Board also emphasized that overnight federal funds transactions are currently subject to the unsecured credit limits of the FMP and that completely excluding overnight federal funds transactions from the restrictions of § 932.9 would have represented a significant loosening of its restrictions, which was not the purpose of adopting these limits. Given these considerations, the Finance Board concluded that it was not appropriate to completely exclude overnight federal funds transactions from the unsecured credit limits, and instead, proposed the overall limit discussed above.

The Finance Board continues to believe that its initial reasoning remains sound. In particular, the Finance Board believes there is a basis for concluding that Banks have a financial incentive to lend to the federal funds markets, and that to permit such lending without limits would be imprudent. The Finance Board also believes that the rule as adopted provides the Banks with sufficient flexibility to invest funds to both meet their liquidity needs and to counter cyclical fluctuations in their business. Based on the same reasoning discussed above, the Finance Board also sees no compelling reasons to extend the treatment offered to overnight federal funds transactions to other types of overnight transactions in which a Bank may engage or to limit the additional lending capacity for overnight federal funds transactions just to transactions with members. Such restrictions would unnecessarily limit a Bank's investment opportunities with little apparent gain from a safety and soundness perspective. Moreover, nothing would prevent a Bank from implementing internal policies that would achieve this goal so long as the policies were consistent with § 932.9 and other Finance Board regulations.

Affiliated Counterparties

In response to concerns that the unsecured credit limits were too restrictive, the Finance Board proposed to amend § 932.9 so that the unsecured credit limit applicable to groups of affiliated counterparties would equal 30 percent of the Banks total capital. 66 FR at 41482. The Finance Board explained that the proposed aggregate limit on extensions of unsecured credit to affiliated counterparties would have allowed the Banks to extend somewhat larger amounts of credit to large financial conglomerates than did the provisions in § 932.9 as adopted in December 2000. *Id.* at 41480.

The Finance Board also proposed amending the definition of ''affiliated counterparty.'' *Id.* at 41481. The Finance Board believed that new definition was more understandable and was more consistent with the meaning of the phrase ''corporate group'' as used in regulations issued by the Office of the Comptroller of the Currency (OCC), which addressed lending to affiliated counterparties. *Id.* at 41480. The effects of the proposed definition would have generally been to raise the threshold for control when defining an affiliate from (either direct or indirect) ownership of 25 percent of the voting securities or interests of an entity to 50 percent of such securities or interests. The Finance Board did not believe the change would generally alter the number or groupings of affiliated counterparties covered by the restrictions in § 932.9. *Id.*

The Finance Board received only one comment on the proposed changes to the unsecured credit limits applicable to extensions to a Bank's unsecured lending to groups of affiliated counterparties. The commenter urged the Finance Board to raise the limit from 30 percent of a Bank's total capital to 50 percent of a Bank's total capital because, as the commenter believed, there was only an indirect link between affiliates related by a common holding company and failure of one affiliate would seldom cause another affiliate to fail. The commenter also recommended that counterparties related by a common holding company and special bankruptcy-remote subsidiaries should

[4] The Office of the Comptroller of the Currency sets forth its lending limits at 12 CFR part 32.

not be considered affiliates for purposes of § 932.9.

The Finance Board considered this comment but has not altered the proposed unsecured lending limits for groups of affiliated counterparties or the proposed definition of affiliated counterparty as a result. The Finance Board disagrees with the commenter's suggestion that there is only minimal risk that the failure of one affiliated counterparty would affect the financial standing of other affiliates. As the Finance Board previously pointed out, applying credit exposure limits to groups of affiliated counterparties is consistent with sound principles of risk management and with practices of other regulators. *See* 66 FR at 41477. The Finance Board believes that the new limit suggested by the commenter would be too lenient and allow Banks too great an exposure to groups of affiliated counterparties. The limit adopted herein on extensions of credit to groups of affiliated counterparties, however, is consistent with limits adopted by other bank regulators.[5] *See* 12 CFR 932.5(d) and 12 CFR 560.93(c). As already stated, the Finance Board also believes that the definition of ''affiliated counterparty,'' as proposed and as adopted herein, is consistent with similar terms used by other banking regulators.

GSE Limits

The Finance Board proposed raising the limit on extensions of unsecured credit to a GSE to 100 percent of the lesser of a Bank's or GSE's total capital. *Id.* at 41482. This change basically would have re-instituted the limit on extensions of unsecured credit to GSEs that had been in effect under the FMP.[6] *Id.* at 41475–76. As the Finance Board explained, the proposal resulted from Banks' concerns that the limits as adopted in December 2000 may have disrupted the Banks' investment strategies. At the same time, the Finance Board did not believe the proposal raised any safety and soundness concerns. *Id.* The proposed amendment also would have required a Bank to treat a GSE like other private counterparties should any NRSRO have assigned a credit rating to, or downgraded a credit rating of, any long-term senior unsecured credit obligation issued by a GSE to below the highest investment grade or placed a GSE on a credit watch for such a downgrade. *Id.* at 41482. This trigger provision was proposed to assure the preferential GSE limit was not applied to an entity undergoing obvious financial difficulty. *Id.* at 41475.

The Finance Board received two comments on this proposed rule. The first commenter believed the trigger provision would have resulted in too drastic a cut in future credit to a troubled GSE and recommended that the deadline for applying the lower limits applied to a GSE after a downgrade in its credit rating be keyed to the extent of the downgrade (*e.g.,* six months if downgraded to the second highest investment grade credit rating, three months if downgraded to the third highest investment grade credit rating, etc.). The commenter argued that reducing future extensions of credit to a GSE in times of financial difficulty could increase the risk of default by that entity. The second commenter requested that the Finance Board clarify that the preferential unsecured lending limit for GSEs would not be applied to subordinated debt issued by the GSE.

The Finance Board does not believe that any change in the proposed trigger provision is necessary in response to the comment and is adopting it as proposed. The commenter's suggestion, if adopted, could leave the Banks with the risk of maintaining the liquidity of other GSEs in the unlikely occurrence that another GSE experienced severe financial difficulties. More importantly, to the extent that special action were needed to help a GSE, or any other large financial institution, such action would have to be coordinated with other financial regulators, and the Finance Board would have to take appropriate action at that time (*e.g.,* waiver of the trigger provision) to allow the Banks to adjust their lending positions accordingly. At the same time, the Finance Board would expect that a Bank would take steps to reduce its exposure to a GSE (or any other counterparty) as soon as the GSE's potential financial difficulties became apparent. Thus, the reduction in extensions of unsecured credit may be spread over time, and the reduction in unsecured credit triggered when the credit rating downgrade actually occurs may not be as drastic as the commenter suggested.

The Finance Board agrees with the second commenter, however, and has altered the final rule to make clear that the special unsecured credit limits applicable to GSEs do not apply to subordinated debt. GSE subordinated debt is generally perceived as providing an indication of the entity's financial standing, independent of any implied government guarantee. As such, the risk of holding GSE subordinated debt would be similar to the risks associated with holding non-GSE debt. The amendments to § 932.9 adopted by the Finance Board will restrict a Bank's holding of GSE debt to the level calculated using the maximum capital exposure limit associated with the credit rating assigned to the GSE's subordinated debt. This rule would apply even if the GSE's subordinated debt received the highest investment grade rating from an NRSRO. Further, a Bank's holdings of a GSE's subordinated debt would be included in the total amount of unsecured credit extended to that GSE for purposes of applying the preferential lending limit for GSEs (*i.e.,* 100 percent of the lesser of the Bank's or the GSE's total capital).

The Finance Board also recognizes that the commenter's concerns with regard to GSE subordinated debt would also apply to the subordinated debt of any other counterparty. Thus, the Finance Board is also adopting new § 932.9(a)(4)(iii) as part of these final rule amendments. This provision imposes a special sub-limit on any debt issued by a counterparty if that debt obligation received an issue rating from an NRSRO that is lower than the counterparty's long-term credit rating. This sub-limit would be calculated using the rating assigned to the lower-rated debt obligation for purposes of determining the maximum capital exposure limit. Because the lower credit rating assigned to a particular obligation would indicate that holding that obligation is more risky than holding other obligations of the issuer-counterparty, it is appropriate to limit the Bank's holdings of that specific obligation. Generally, the Finance Board believes that an issue rating will be lower than the issuer's long-term rating only in cases where the issue in question is subordinated debt.

Measurement of Derivatives Exposure

The Finance Board proposed amending § 932.9 to require a Bank to measure the unsecured credit exposure arising from a derivative contract in accordance with §§ 932.4(g) and 932.4(h) of the Finance Board rules. 12 CFR 932.4(g) and 932.4(h). As adopted in December 2000, § 932.9 contained no provision indicating how a Bank should measure its unsecured credit exposure to a counterparty, and this change would have conformed the

[5] The cited regulations generally restrict an institution's aggregate extension of credit, including any lending that is fully secured by readily marketable financial instruments or bullion in which the lender holds a perfected security interest, to a corporate group to an amount not to exceed 50 percent of a bank's capital and surplus. The Finance Board's limit, though lower, would not apply to extensions of credit which are backed by collateral held by a Bank in accordance with the requirements of § 932.9.

[6] Mortgage-backed securities issued by other federal housing GSEs and purchased by the Banks were previously, and are not now, considered a form of unsecured credit by the Finance Board.

measurement for derivative contracts with that undertaken when calculating a Bank's credit risk capital charges for derivative contracts under § 932.4 of the Finance Board rules.

Four commenters pointed out that when read strictly this provision as proposed would not take account of collateral held against derivative exposure. These commenters pointed out that the proper measure of the unsecured credit exposure from a derivative contract should be the net marked-to-market value of the contract less the collateral posted by the counterparty. Two of these commenters also specifically stated that it was inappropriate to include the potential future credit exposure (PFE) of a contract in the calculation of the Bank's extension of unsecured credit to a counterparty. The two commenters pointed out that the exposure of a Bank upon default of a counterparty would be the marked-to-market value of the contract at the time of default. Further, these commenters stated risk management techniques, such as the right to value derivatives and call for additional collateral at any time, mitigate the need to include PFE in exposure calculations. One of these two commenters also requested that the Finance Board specify the frequency with which a Bank must measure its credit exposure from a derivative contract and recommended a frequency of once a month, which would coincide with minimum requirements in agreements for measuring exposure and settling collateral.

The Finance Board did not intend that derivative exposure against which collateral is properly held be included in the amount of unsecured credit extended to a counterparty, but agrees that the proposed wording in § 932.9(f) did not make this clear. Thus, this provision, as adopted, has been reworded to make clear that any portion of a derivative exposure against which the Bank holds collateral shall not be counted toward the total amount of unsecured credit extended to a counterparty. To be counted, however, this collateral must be held in accordance with § 932.4(e)(2)(ii)(B) of the Finance Board's rules, which among other things requires the value of the collateral to be appropriately discounted to protect the Bank against a price decline during the holding period and to account for the potential cost of liquidation of the collateral.

The Finance Board, however, believes that it is appropriate to continue to include a derivative contract's PFE in the calculation of extension of unsecured credit. Such practice appears to be standard for derivative dealers when setting counterparty credit limits. *See e.g.,* Bank for International Settlements, ''OTC Derivatives: Settlement Procedures and Counterparty Risk Management'' 15–16 (Sept. 1998). The Finance Board believes that it is also appropriate here since the value of certain derivative contracts may be fast changing and the use of collateral may reduce losses but generally does not eliminate credit risk. *Id.* at 4. Thus, as adopted, § 932.9(f) requires a Bank to include both the current credit exposure and the PFE in its calculation of the amount of unsecured credit extended to a counterparty. This provision, both as proposed and as adopted, allows a Bank, however, to calculate its exposure on a net basis for derivative contracts subject to a qualifying bilateral netting contract, as that phrase is defined under § 932.4(h)(3).

The Finance Board has also decided not to place in the rule a minimum frequency for calculating exposures under a derivative contract. Instead, Banks should establish clear policies to govern such calculations, and these policies will be reviewed by the Finance Board in the course of Bank examinations. In setting this policy, a Bank should consider the complexity of its derivative holdings and the volatility of the value of those holdings as well as other relevant factors. The Finance Board generally believes, however, that a Bank should value its derivative contracts more frequently than once a month for purposes of applying § 932.9.

Requests for Additions to the Rule

Two commenters asked that the Finance Board add a provision to the rule to clarify the status of bonds issued by state and local housing finance agencies (HFAs). Both commenters pointed out that investment in HFA bonds helped Banks achieve their housing finance missions and provided Banks with investment flexibility and that treating HFAs like other counterparties severely restricts the Banks' investment in HFA bonds because HFAs often have low capital. These commenters also noted that HFA bonds were considered outside the scope of the unsecured credit limits of section VI of the FMP. As a follow up to its comment letter, one commenter sent an additional letter stating that they believe that most HFA bonds were secured by mortgage collateral and therefore should have been exempt from the unsecured credit limits, but provided no justification or legal rationale to support such a conclusion. Another commenter requested that the Finance Board add a provision that if a third-party guaranteed repayment by the counterparty, the unsecured credit limits should be applied to the guarantor and not to the counterparty itself, as has been required under the FMP.

The Finance Board has considered these comments and has made changes in the final rule as a result. With regard to the HFA obligations, the Finance Board believes that generally these obligations should be subject to the unsecured credit limitations. While the structure of the HFA obligations held by the Banks may vary widely, it does not appear that these obligations are usually secured in the sense that the HFA provides the Bank with collateral that the Bank holds in accordance with the principles set forth in § 932.4(e)(2)(ii)(B) or in the same sense that a Bank secures an advance. Nevertheless, given that the structure of these transactions may vary, the Finance Board is willing to consider on a case-by-case basis that a specific HFA transaction may be considered secured and therefore should be excluded from the limits of § 932.9.

The Finance Board agrees with the commenters, however, that application of the proposed limits in § 932.9 may restrict the Banks' ability to purchase the HFA obligation and be detrimental to the Banks' housing finance mission. Investments in HFA obligations are also subject to other Finance Board regulations. Thus, the Finance Board is adopting new § 932.9(a)(3) which sets a special limit for certain HFA obligations. As is explained more fully in the next section of this preamble, this special limit for qualified HFA obligations will be calculated based upon the Bank's total capital and the maximum capital exposure limit associated with the rating of the instrument purchased by the Bank. To qualify for treatment under § 932.9(a)(3), the HFA obligation must either be an acquired member asset, as defined in § 955.2 of the Finance Board rules, or be the type of obligation excluded by § 956.3(a)(4)(iii) from the general prohibition against the Banks' investing in whole mortgages or loans (or interests therein). The Finance Board believes that the approach adopted in these amendments will provide the Banks with sufficient capacity to invest in HFA obligations in support of their housing finance mission while still preventing undue concentrations of these instruments on the Banks' books.

More generally, the Finance Board recognizes that, given the comment concerning the status of HFA bonds, there may be some confusion concerning the intended scope of this rule. This is especially true where a

bond or other debt securities may be backed by a pledge of specific property or by revenues, such as may occur with certain HFA bonds, so that the debt security may be considered secured in some context. In developing this rule, however, the Finance Board has viewed the purchase of a debt security or other debt obligation generally to be an unsecured extension of credit, unless the Bank, itself, holds or controls collateral against its exposure from the debt obligation, in accordance with the requirements of § 932.4(e)(2)(ii)(B). To make this view clear, the Finance Board has adopted new § 932.9(f)(2). New § 932.9(f) also makes clear that the Finance Board continues to exempt mortgage-backed securities from the unsecured credit limits and that loans purchased as acquired member assets (AMA) and identified in §§ 955.2(a)(1) and (2), 12 CFR 955.2(a)(1) and (2), are also exempt.

The AMA exemption under new § 932.9(f)(2) does not extend to HFA bonds purchased under the AMA. Generally, a member or housing associate does not need to provide added credit enhancements and collateralize that credit enhancement for HFA bonds as it would for mortgages purchased under the AMA program. *See* 12 CFR 955.3(b)(3). This is because the HFA bonds purchased under the AMA program are already enhanced by collateral (not held by the Bank) and rated sufficiently high that additional enhancement or collateral is not required. Further, the unsecured credit provision for HFA bonds already takes account of this higher rating by allowing the maximum capital exposure limits to be determined based on the issue rating of the HFA bond itself rather than on the rating of the HFA. The new provision also makes clear that the Finance Board is willing to consider on a case-by-case basis that any debt obligation or debt security purchased by the Bank should not be subject to the limits of § 932.9 because the Bank's credit exposure is adequately secured.

The Finance Board also agrees with the commenter that where a third-party has provided an unconditional and irrevocable guarantee covering a credit extended by the Bank, the Bank's exposure will ultimately be to the guarantor. Given this fact, the Finance Board has modified proposed § 932.9(a) to make clear that if repayment of a credit is guaranteed unconditionally and irrevocably by a third-party, the resulting unsecured credit exposure would be treated as if it were to the third-party guarantor. This means that in calculating the unsecured credit limits for these guaranteed transactions, a Bank would consider the credit rating and capital of the third-party guarantor and would aggregate the credit exposure arising from the guarantee with any other unsecured credit extended to the third-party guarantor. The Finance Board recognizes that for regulatory or other reasons, a third-party may not provide, or be able to provide, an irrevocable guarantee, but may provide some other form of support or credit enhancement. While the rule as adopted only allows unconditional, irrevocable guarantees to be attributed to the third-party guarantor, the Finance Board would be willing to consider allowing this treatment to be extended on a case-by-case basis to other specific support arrangements, if a Bank can demonstrate that the support or credit enhancement provided by the third-party provides a level of protection equivalent to an irrevocable guarantee.

Requests for Clarification

One commenter requested clarification as to whether the phrase ''affiliated counterparties' combined * * * capital'' as used in the reporting requirements of proposed § 932.9(e)(1)(ii) meant the consolidated capital of the affiliated group or the combined capital of only those affiliated counterparties' to which a Bank had actually extended credit. The Finance Board believes that the phrase ''affiliated counterparties' combined * * * capital'' should be interpreted to mean the consolidated capital of the holding company for the affiliated group. Use of this figure would help avoid double counting of capital of affiliated members of a group.

This commenter also requested clarification whether the Finance Board expected data as of the month-end or some other date under the ''monthly'' reporting that would be required under § 932.9(e). This requirement applies to extensions of credit outstanding at any time during the month, not just at month-end, although the Bank does not have to submit its report to the Finance Board until after the last business day of the month. Such report should be provided promptly after that date.

Another commenter asked for clarification of the meaning of the phrase ''net payments due a Bank'' as used in proposed § 932.9(f)(1), a provision which addresses the measurement of unsecured credit exposures from on-balance sheet transactions. The Finance Board notes that this phrase was used in section VI of the FMP, and the Finance Board intends that it has the same meaning as under the FMP. Thus, the phrase indicates an amount due to or accrued by the Bank as of a point in time (i.e., the time a Bank measures its exposure from the on-balance sheet transaction) and not the future amounts due over the life of the transaction.

Status of FMP Provisions

One commenter requested that the Finance Board specifically rescind in the final version of § 932.9 provisions in section VI of the FMP concerning maximum maturities for derivative contracts and contingent collateralization of interest rate exchange agreements. The Finance Board does not believe a specific provision needs to be added to § 932.9 as requested by the commenter. Upon the effective date of § 932.9, the unsecured credit limitations of section VI of the FMP will be superseded and replaced by the rule. Any provision of section VI of the FMP which has not been adopted as part of § 932.9, such as the two cited by the commenter, will no longer apply to the Banks.

Another commenter asked the Finance Board to clarify whether restrictions contained in certain parts of the FMP would still be applicable after the effective date of § 932.9. Specifically, the commenter requested clarification of the applicability of: footnote 1 which defines ''eligible financial institutions'' and effectively limits the counterparties to which a Bank may lend overnight and term funds; footnote 3 which sets forth qualifications for issuers of commercial paper, bank notes and thrift notes that a Bank may buy; and footnote 6 which sets forth the criteria for eligible non-member counterparties for hedging transactions. Footnotes 1 and 3 appear in section II.B of the FMP, and footnote 6 is found in section V of the FMP. The Finance Board believes that because these provisions restrict, based on credit ratings, the counterparties to which the Bank may extend credit or with which a Bank may transact business which would create a credit exposure, these restrictions should be superseded upon the effective date of § 932.9. Section 932.9 is intended to address concerns about the credit rating of the Banks' counterparties. It does so, however, by limiting the amount of credit a Bank can extend to parties rated at these various levels and not by restricting the counterparties with which the Bank can transact. The new business activity requirements of Part 980 of the Finance Board's rules would apply to any investments involving counterparties the Bank intends to transact with that were not permitted under the FMP. *See* 66 FR at 41477–78.

III. The Final Rule

Except as noted below, the Finance Board is adopting the amendments to § 930.1 and § 932.9 of its rules, generally as proposed. The notices of proposed rulemaking published in the **Federal Register** on March 7, 2001, 66 FR 13688, and August 8, 2001, 66 FR 41474, contain additional explanatory information about the changes being adopted herein, and interested parties should review these document for a more complete understanding of the rule provisions discussed below.

Definitions

The Finance Board is amending § 930.1 of its rules, as proposed, to change the definition for ''affiliated counterparty'' and to add a new definition for the phrase ''sales of federal funds subject to a continuing contract.'' The definition of ''affiliated counterparty'' being adopted herein reads as follows:

> *Affiliated counterparty* means a counterparty of a Bank that controls, is controlled by or is under common control with another counterparty of the Bank. For the purposes of this definition only, direct or indirect ownership (including beneficial ownership) of more than 50 percent of the voting securities or voting interests of an entity constitutes control.

The amended definition will generally raise the threshold for control from direct or indirect ownership of 25 percent of the voting securities or voting interests of an entity to ownership of 50 percent of such interests, but is not likely to alter significantly the number or groupings of counterparties that would be covered by the affiliated counterparty limitations. *See,* 66 FR at 41480.

In addition, the Finance Board is defining the phrase ''sales of federal funds subject to a continuing contract'' as an overnight federal funds loan that is automatically renewed each day unless terminated by either the lender or the borrower. This definition is consistent with the generally understood meaning of this phrase, and makes clear the types of federal funds transactions that will benefit from treatment under the overall limit of § 932.9(a)(2) of the Finance Board rules. *See Id.* at 41478.

Unsecured Extensions of Credit to a Single Counterparty

The Finance Board is adopting proposed § 932.9(a) with additional provisions designed primarily to address subordinated debt issued by a counterparty and a Banks' purchases of certain obligations issued by HFAs. In addition, the Finance Board has adopted a change to the proposed rule that requires a Bank to attribute the unsecured credit exposure arising from a transaction for which repayment is irrevocably and unconditionally guaranteed by a third-party to the guarantor. The Finance Board also has restructured § 932.9(a) slightly to accommodate the new provisions.

As adopted, § 932.9(a) of the Finance Board rules sets forth the limits on a Bank's extensions of unsecured credit to a single, non-GSE counterparty. Specifically, a Bank must always meet two limits. Under the first limit, all unsecured extensions of credit, except sales of overnight federal funds, by a Bank to single non-GSE counterparty can not exceed the term limit set forth in § 932.9(a)(1). Under the second limit, which is twice the term limit, all unsecured extensions of credit including overnight federal funds transactions by a Bank to a single counterparty can not exceed the overall limit set forth in § 932.9(a)(2). *See Id.* The effect of these limits is to allow the Banks to increase their lending of overnight federal funds to non-GSE counterparties beyond the term limit applicable to other types of unsecured lending.

Section 932.9(a) also sets out the criteria for calculating the term limit and the overall limit applicable to non-GSE counterparties. Under the rule, the term limit equals the product of the maximum capital exposure limit multiplied by the lesser of: (i) The Bank's total capital or (ii) the counterparty's Tier 1 capital, or, if Tier 1 capital is not available total capital (as defined by the counterparty's principal regulator), or some comparable measure identified by the Bank. This approach is the same approach adopted in § 932.9 in December 2000. *See* 66 FR at 8301–02. The overall limit is twice the term limit calculated for the counterparty.

Further, as adopted, § 932.9(a) clarifies how a Bank attributes the credit exposure arising from a transaction that is subject to an unconditional and irrevocable guarantee by a third-party. Under the rule, if repayment of any unsecured credit is irrevocably and unconditionally guaranteed by a third party, the third-party guarantor shall be considered the counterparty. The Bank would therefore attribute the credit exposure to the third-party guarantor and calculate the applicable unsecured credit limits based upon the long-term credit rating of the third-party guarantor and the lesser of the Bank's total capital or the relevant capital measure for the third-party guarantor. If the third-party only guarantees a portion of the repayment of the credit, only that portion of the credit exposure so guaranteed shall be attributable to the third party guarantor, and the remainder of the exposure shall be attributable to the direct counterparty and subject to the limits applicable to the direct counterparty. As discussed above, the Finance Board is willing to consider requests from the Bank on a case-by-case basis that it apply this approach to other forms of credit enhancement that may not clearly constitute an irrevocable unconditional guarantee, but may nonetheless offer a equivalent level of support.

As previously discussed, the limits for qualifying obligations issued by an HFA also are calculated somewhat differently, and, as set forth in § 932.9(a)(3), the limit for these HFA obligations will always equal the product of the applicable maximum capital exposure limit and the Bank's total capital. Furthermore, the maximum capital exposure limit will be determined based on the credit rating assigned to the particular obligation purchased by the Bank. This approach could conceivably result in different limits applying to different classes or series of obligations issued by the same HFA (if each class or series received different issue ratings from the NRSROs). In such a case, however, the rule makes clear that limits will not be separately and independently applied so that the total amount of unsecured credit extended to a HFA by a Bank could never exceed the limit associated with the highest rated qualifying obligation purchased by the Bank. For example, if a Bank purchased two classes of qualifying obligations from a HFA with different structures such that one class was rated in the highest investment grade category and the other was rated in the second highest investment grade category by an NRSRO, the Bank's combined total purchase of both classes of instruments could not exceed 15 percent of the Bank's total capital. At the same time, the Bank's purchase of the instrument rated in the second highest investment grade category could not exceed 14 percent of the Bank's total capital.

To qualify for treatment under § 932.9(a)(3), the HFA obligation must either be an acquired member asset, as defined in § 955.2 of the Finance Board rules, or be the type of obligation excluded by § 956.3(a)(4)(iii) from the general prohibition against the Banks' investing in whole mortgages or loans (or interests therein). Any other type of obligation issued by an HFA or any other form of unsecured extension of credit to the HFA would not qualify for treatment under § 932.9(a)(3), and the

limit for that investment would be calculated under § 932.9(a)(1). Of course, the Bank would also have to be authorized to invest in or provide such other form of unsecured credit under part 956 of the Finance Board rules or some other applicable Finance Board regulation or order.

The maximum capital exposure limits are set forth in Table 4. Each maximum capital exposure limit corresponds to a different investment grade rating so that more restrictive maximum capital exposure limits are imposed on lower-rated, and therefore potentially riskier, counterparties. The applicable maximum capital exposure limit for a counterparty rated at the highest investment grade by an NRSRO is set at 15 percent. This level is broadly consistent with federal lending limits pertaining to commercial banks as set forth by statute and regulation. The maximum capital exposure limits corresponding to credit ratings below the highest investment grade, however, are calibrated to the 15 percent maximum capital exposure limit based upon the ratio of the average credit risk percentage requirement (over all maturity bucket groupings) for the highest investment grade to the average credit risk percentage requirement for each investment grade.[7] A more complete explanation of the derivation of the maximum capital exposure limits is found in the **SUPPLEMENTARY INFORMATION** section of the **Federal Register** release proposing this rule. *See* 66 FR at 41478–80.

As set forth in § 932.9(a)(4)(i), a Bank will determine the maximum capital exposure limit applicable to a counterparty based on the counterparty's long-term credit rating, subject to two exceptions.[8] Under the first exception, a short-term credit rating will be used to determine the applicable maximum credit exposure limit if NRSROs have provided a short-term credit rating for a counterparty but have not provided a long-term rating for that counterparty. *See Infra* § 932.9(a)(4)(ii). If a short-term credit rating for a counterparty is used, however, the highest short-term investment grade rating is deemed to correspond to the maximum capital exposure limit assigned to the third highest long-term investment grade rating in Table 4 (*i.e.,* nine percent), and the second and third highest short-term investment grade ratings would correspond to the maximum capital exposure limit assigned to the fourth highest long-term investment grade rating in Table 4 (*i.e.,* 3 percent). This treatment of the short-term investment grade credit ratings is more fully discussed in the proposing release. 66 FR at 41480.

The second exception to exclusive use of long-term credit ratings is set forth in § 932.9(a)(4)(iii), and has been added by the Finance Board in adopting this final rule. This provision states that if a Bank purchases a debt obligation from a counterparty that has an investment rating from an NRSRO that is lower than the counterparty's long-term rating, the amount of the lower-rated obligation held by the Bank can not exceed a special sub-limit. Specifically, this sub-limit equals the maximum capital exposure limit from Table 4 corresponding to the rating assigned the lower-rated debt obligation multiplied by the lesser of the Bank's total capital or the counterparty's applicable capital measurement. While the Bank's purchases of the lower-rate obligation could not exceed the sub-limit, the total amount of unsecured credit extended by the Bank to the counterparty (including amounts of the lower rated obligation) would be restricted by the term limit and overall limit calculated using the counterparty's long-term credit rating. As already noted, the Finance Board recognized the need to adopt this provision when considering comments that the special unsecured credit limits for GSEs should not be applied to subordinated debt issued by the GSE because the same concerns arise whether a GSE or a non-GSE counterparty issues subordinated debt.[9]

Section 932.9(a)(5) establishes the criteria that a Bank will use to determine a counterparty's long-term credit rating. The same criteria should be used whenever § 932.9 requires a Bank to determine the short-term rating of a counterparty or the issue rating of a specific obligation. This criteria is generally the same as that adopted in § 932.9 in December 2000, and has been altered only to remove provisions that are no longer necessary given other changes adopted in this final rule. *See Id.* at 41481. In determining a counterparty's long-term credit rating, the rule requires a Bank to use the most recent rating issued by an NRSRO, and if more than one NRSRO has rated the counterparty, to use the lowest rating from among those ratings. A Bank should also ignore modifiers (*e.g.,* +, −, or 1, 2, 3), so that, for example, ratings of A+ or A− would both correspond to the same maximum capital exposure limit in Table 4 (*i.e.,* third highest investment grade or 9 percent). Further, if a counterparty is placed on a credit watch by an NRSRO, the rule states that the credit rating from that NRSRO at the next lower grade shall be used. In cases where a counterparty is not rated by an NRSRO, the rule allows a Bank to determine the applicable credit rating using standards available from an NRSRO or similar standards.

Affiliated Counterparties

The Finance Board is adopting the unsecured credit limit on groups of affiliated counterparties in § 932.9(b), as proposed. *See Id.* at 41480 (discussing proposed affiliated counterparty limit). Under § 932.9(b), the aggregate limit on the extension of unsecured credit to a group of affiliated counterparties would equal 30 percent of the FHLBank's total capital. In calculating the amounts of unsecured credit extended to a group of affiliated counterparties, a Bank should include the amounts of sales of overnight federal funds to those affiliated counterparties. The rule also makes clear that unsecured credit limitations on individual counterparties continue to apply to each counterparty within a group of affiliated counterparties.

GSE Limits

The Finance Board is adopting the special limit for GSEs generally as proposed, *see id.* at 41475–76, 41478, but, as already explained above, has added a provision to establish a lower, sub-limit for GSE subordinated debt held by a Bank. In adopting the final version of § 932.9(c), the Finance Board also has made some technical and conforming changes to the proposed rule.

Section 932.9(c) establishes the credit limits that a Bank should impose on its unsecured lending to GSEs. Under § 932.9(c)(1), a Bank's unsecured credit exposure to a GSE may not exceed 100 percent of the lesser of either the Bank's total capital or the GSE's total capital (as defined by the GSE's principal regulator, or some similar measure of the GSE's capital identified by the Bank). In applying this limit, a Bank must include in its calculation of the total amount of unsecured credit extended to a GSE all forms of

[7] The credit risk percentage requirements are set forth in § 932.4, Table 1.3 of Part 932 of the Finance Board rules, 12 CFR 932.4, and are used to calculate the credit risk component of the Bank's risk-based capital requirement.

[8] The Finance Board addressed its reasons for relying on long-term credit rating in its response to comments in Section II above as well as in the preamble of the August 2001 proposing release for this rule. *See* 66 FR at 41479.

[9] By contrast, a review of Moody's September 2001 Rating Lists for Banks and Securities Firms found that the issuer rating (i.e., the long-term counterparty rating) seldom if every differed from issue ratings for long-term senior debt. This is especially true under the rule because the rule ignores modifiers when determining credit ratings.

unsecured lending, including sales of overnight federal funds and a Bank's purchases of the GSE's subordinated debt. In addition, § 932.9(c)(2) requires that a Bank's total purchase of a GSE's subordinated debt not exceed a special sub-limit, which equals the maximum capital exposure limit corresponding to the credit rating assigned to the subordinated debt multiplied by the lesser of the Bank's total capital or the applicable capital measurement of the GSE. For example, if a GSE's subordinated debt were rated AA and the GSE's total capital were larger than the Bank's total capital, the sub-limit on purchases of the GSE's subordinated debt would equal 14 percent of the Bank's total capital. A Bank must calculate and apply the sub-limit on subordinated debt even if the subordinated debt is rated at the highest investment grade.

Section 932.9(c)(3) requires a Bank to treat GSEs like private counterparties in the event any NRSRO assigns a credit rating to, or downgrades the credit rating of, any long-term, senior debt obligation issued by a GSE to below the highest investment grade, or places the GSE on a credit watch for a potential downgrade. In this case, the Bank must calculate the maximum amount of its unsecured extensions of credit to that GSE in accordance with paragraph (a)(1) of the proposed rule. After a GSE's credit rating is downgraded or the GSE is placed on a watch list for a potential downgrade, § 932.9(d) applies to a Bank's extensions of unsecured credit to that GSE.

Section 932.9(c)(4) exempts a Bank's unsecured lending to another Bank from all the unsecured credit limits of this rule, although a Bank still must report its credit exposure to another Bank to the extent required by § 932.9(e). In adopting § 932.9(c)(4), the Finance Board is incorporating into the unsecured credit rule a similar inter-Bank exclusion that was contained in the FMP's unsecured credit provision. *See Id.* at 41476, 41478.

Transition Provision for Downgrades

The Finance Board has adopted the transition provision of § 932.9(d), as proposed. *See Id.* at 41480–81. This provision provides that in the event a lower maximum credit limit is imposed on a counterparty (including on a GSE) because an NRSRO has downgraded the credit rating applicable to a counterparty or has placed a counterparty on a credit watch for a potential downgrade, a Bank is not required to unwind or liquidate any transaction or position that was entered into prior to the date of the downgrade or the placement on credit watch so long as the transaction or position complied with the limits at the time it was entered.[10] However, any new unsecured extensions of credit to the counterparty would have to comply with the new lower maximum exposure limit. The rule makes clear that a renewal of an existing unsecured extension of credit, including any decision not to terminate a sale of federal funds subject to a continuing contract, would be considered a new extension of unsecured credit.

Reporting Requirements

The Finance Board is adopting the reporting requirements contained in § 932.9(e), generally as proposed. These requirements are in substance the same as those that were contained in § 932.9(c) of the version of the unsecured credit rule adopted by the Finance Board in December 2000. However, in adopting the final version of § 932.9, the Finance Board has added new provision to § 932.9(e) which requires the Banks promptly to report any positions in excess of the term limit, the overall limit or the special GSE limit set forth in the rule.

Under this provision, the Banks must report monthly to the Finance Board the amount of unsecured credit to a single counterparty, or group of affiliated counterparty, that exceeds five percent of either a Bank's total capital or the counterparty's, or the affiliated counterparties' combined, Tier 1 capital, or if Tier 1 capital is not available the counterparty's total capital (as defined by the counterparty's principal regulator) or some other comparable measure identified by the Bank. As discussed above, the consolidated capital of the holding company of the group of affiliated counterparties would be considered the combined capital of that affiliated group. In addition, the Banks must report monthly to the Finance Board the amount of the Bank's total combined secured and unsecured extensions of credit to a single counterparty or group of affiliated counterparties that exceed five percent of a Bank's total assets.

These reporting obligations apply to all extensions of credit by a Bank (including extensions of credit to other Banks), except those arising from a Bank's purchase of obligations of, or guaranteed by, the United States. As discussed above Banks must report promptly after the last business day of the month any extensions of credit in excess of the limits set forth in §§ 932.9(e)(1) and (e)(2) that occurred during that month.

New § 932.9(e)(3) requires that a Bank report promptly to the Finance Board any time its extensions of unsecured credit exceed any one or more of the limits set forth in §§ 932.9(a), (b) or (c). The Banks should report the name of the counterparty or group of affiliated counterparties involved, the date or dates for which the Bank was not in compliance, the level of the limit calculated in accordance with the rule and the amount by which the Bank's extension of unsecured credit exceeded the limit. The Bank may also include a brief statement describing any extenuating circumstances or other factors that may have led to non-compliance with the limits. The Finance Board believes that the initial report by the Bank need only be brief. If additional information is needed, the Finance Board will request it from the Bank depending on the particular circumstances of the situation. The Finance Board has not set a specific deadline for submitting a report required under § 932.9(e)(3) to provide some flexibility in this area. By way of guidance, however, the Finance Board believes that a report would be prompt if it occurred within two business days of when the Bank recognizes that a limit had been breached.

The Finance Board is adopting this new provision to help it closely monitor the effectiveness of these unsecured credit limits, and the Banks' concentration of credit. The Finance Board also believes that it is more effective and provides an opportunity for quick action (if needed) to require that reports be made to the Finance Board as soon as a Bank finds that it is not in compliance with the unsecured credit limits rather than seek such information on an *ad hoc* basis or wait for the monthly credit reporting required under the rule. The requirement also closes gaps in the reporting provision in that a Bank could be in violation of the unsecured credit limits with regard to a lower-rated counterparty but not necessarily be required to report the credit concentration under §§ 932.9(e)(1) or (2).

Calculating Extensions of Credit

The Finance Board has adopted proposed § 932.9(f) as § 932.9(f)(1) with one change to make clear that any credit exposure from a derivative contract against which the Bank holds collateral is not counted as unsecured credit. The

[10] The finance Board has already stated that § 932.9 will not require a Bank to unwind existing positions that do not conform to its new limits, provided that the credit was extended in accordance with the FMP prior to the effective date of this rule. *See* 66 FR at 41477–78.

provision, as adopted, also makes clear that the Bank must hold this collateral in accordance with § 932.4(e)(2)(ii)(B) in order for the value of the collateral to be subtracted from the credit exposure arising from the derivative contract. As discussed in Section II of this preamble, the Finance Board has also adopted new § 932.9(f)(2) to clarify the status of certain debt securities and debt obligations purchased by the Bank. Section 932.9(f) also has been restructured to accommodate the new provision. Other parts of § 932.4(f)(1) are adopted as proposed. *See Id.* at 41481. Thus, the amount of unsecured credit arising from on-balance sheet transactions will equal the sum of the book value of the item plus any amounts accrued by the Bank but not yet paid with respect to that item. The rule also requires a Bank to measure exposures from off-balance sheet and derivative transactions in accordance with § 932.4 of the Finance Board rules, which sets forth the requirements for calculating a Bank's credit risk-based capital charge. Thus, unsecured credit exposures arising from off-balance sheet transactions should be measured in accordance with § 932.4(f); unsecured credit exposures from single derivatives contracts should be measured in accordance with § 932.4(g); and unsecured credit exposures for derivative contracts subject to a qualifying bilateral netting contract should be measured in accordance with § 932.4(h). The Banks should include both the current credit exposure and the PFE in calculations of exposures arising from derivative contracts.

As previously discussed, § 932.9(f)(2) has been adopted to clarify the Finance Board's view that any debt obligation or debt security purchased by the Bank will be subject to the unsecured credit limits unless the Bank's credit exposure arising from these instruments is collateralized in accordance with § 932.4(e)(2)(ii)(B) or the Finance Board has made a determination on a case-by-case basis that the debt obligation should not be subject to the unsecured credit limits. The new provision specifically states that MBS are not subject to the unsecured credit limits nor are loans identified in §§ 955.2(a)(1) and (2) and purchased by the Bank as AMA under authority granted in part 955. HFA bonds purchased under a Bank's AMA authority, however, would be subject to the unsecured credit limits unless the Finance Board determines otherwise. Further, § 932.9(f)(2) only addresses debt obligations or debt securities purchased by the Bank. Thus, transactions with members originated by the Bank such as advances or letters of credit would be considered secured and not subject to the rules as long as collateral is posted and held in accordance with any applicable Finance Board rules and Bank policies.

United States Obligations

The Finance Board is adopting § 932.9(g), as proposed. *See Id.* at 41481. This provision makes clear that obligations of, or guaranteed by, the United States are not subject to the any of requirements of § 932.9 (including the reporting requirements that are contained in § 932.9(e)).

IV. Regulatory Flexibility Act

The final rule applies only to the Banks, which do not come within the meaning of small entities as defined in the Regulatory Flexibility Act (RFA). *See* 5 U.S.C. 601(6). Therefore, in accordance with section 605(b) of the RFA, 5 U.S.C. 605(b), the Finance Board hereby certifies that this final rule, will not have a significant economic effect on a substantial number of small entities.

V. Paperwork Reduction Act

The final rule does not contain any collections of information pursuant to the Paperwork Reduction Act of 1995. *See* 44 U.S.C. 3501 *et seq.* Therefore, the Finance Board has not submitted any information to the Office of Management and Budget for review.

List of Subjects in 12 CFR Parts 930 and 932

Capital, Credit, Federal home loan banks, Investments, Reporting and recordkeeping requirements.

Accordingly, the Federal Housing Finance Board amends title 12, chapter IX, Code of Federal Regulations as follows:

PART 930—DEFINITIONS APPLYING TO RISK MANAGEMENT AND CAPITAL REGULATIONS

1. The authority citation for part 930 continues to read as follows:

Authority: 12 U.S.C. 1422a(a)(3), 1422b(a), 1426, 1440, 1443, 1446.

2. In § 930.1 revise the definition of *Affiliated counterparty,* and add, in correct alphabetical order the definition for *Sales of federal funds subject to a continuing contract,* to read as follows:

§ 930.1 Definitions.

* * * * *

Affiliated counterparty means a counterparty of a Bank that controls, is controlled by or is under common control with another counterparty of the Bank. For the purposes of this definition only, direct or indirect ownership (including beneficial ownership) of more than 50 percent of the voting securities or voting interests of an entity constitutes control.

* * * * *

Sales of federal funds subject to a continuing contract means an overnight federal funds loan that is automatically renewed each day unless terminated by either the lender or the borrower.

* * * * *

PART 932—FEDERAL HOME LOAN BANK CAPITAL REQUIREMENTS

3. The authority citation for part 932 continues to read as follows:

Authority: 12 U.S.C. 1422a(a)(3), 1422b(a), 1426, 1440, 1443, 1446.

4. Revise § 932.9 to read as follows:

§ 932.9 Limits on unsecured extensions of credit to one counterparty or affiliated counterparties; reporting requirements for total extensions of credit to one counterparty or affiliated counterparties.

(a) *Unsecured extensions of credit to a single counterparty.* A Bank shall not extend unsecured credit to any single counterparty (other than a GSE) in an amount that would exceed the limits of this paragraph. A Bank shall not extend unsecured credit to a GSE in an amount that would exceed the limits set forth in paragraph (c) of this section. If a third-party provides an irrevocable, unconditional guarantee of repayment of a credit (or any part thereof), the third-party guarantor shall be considered the counterparty for purposes of calculating and applying the unsecured credit limits of this section with respect the to guaranteed portion of the transaction.

(1) *Term limits.* All unsecured extensions of credit by a Bank to a single counterparty that arise from the Bank's on- and off-balance sheet and derivative transactions (but excluding the amount of sales of federal funds with a maturity of one day or less and sales of federal funds subject to a continuing contract) shall not exceed the product of the maximum capital exposure limit applicable to such counterparty, as determined in accordance with paragraph (a)(4) of this section and Table 4 of this part, multiplied by the lesser of:

(i) The Bank's total capital; or

(ii) The counterparty's Tier 1 capital, or if Tier 1capital is not available, total capital (as defined by the counterparty's principal regulator) or some similar comparable measure identified by the Bank.

(2) *Overall limits including sales of overnight federal funds.* All unsecured extensions of credit by a Bank to a single counterparty that arise from the Bank's on- and off-balance sheet and derivative transactions, including the amounts of sales of federal funds with a maturity of one day or less and sales of federal funds subject to a continuing contract, shall not exceed twice the limit calculated pursuant to paragraph (a)(1) of this section.

(3) *Limits for certain obligations issued by state, local or tribal governmental agencies.* The term limit set forth in paragraph (a)(1) of this section when applied to the marketable direct obligations of state, local or tribal government unit or agencies that are acquired member assets identified in § 955.2(a)(3) of this chapter or are otherwise excluded from the prohibition against investments in whole mortgages or whole loan or interests in such mortgages or loans by § 956.3(a)(4)(iii) of this chapter shall be calculated based on the Bank's total capital and the credit rating assigned to the particular obligation as determined in accordance with paragraph (a)(5) of this section. If a Bank owns series or classes of obligations issued by a particular state, local or tribal government unit or agency or has extended other forms of unsecured credit to such entity falling into different rating categories, the total amount of unsecured credit extended by the Bank to that government unit or agency shall not exceed the term limit associated with the highest-rated obligation issued by the entity and actually purchased by the Bank.

(4) *Bank determination of applicable maximum capital exposure limits.* (i) Except as set forth in paragraph (a)(4)(ii) or (a)(4)(iii) of this section, the applicable maximum capital exposure limits are assigned to each counterparty based upon the long-term credit rating of the counterparty, as determined in accordance with paragraph (a)(5) of this section, and are provided in the following Table 4 of this part:

TABLE 4.—MAXIMUM LIMITS ON UNSECURED EXTENSIONS OF CREDIT TO A SINGLE COUNTERPARTY BY COUNTERPARTY LONG-TERM CREDIT RATING CATEGORY

Long-term credit rating of counterparty category	Maximum capital exposure limit (in percent)
Highest Investment Grade	15
Second Highest Investment Grade	14
Third Highest Investment Grade	9
Fourth Highest Investment Grade	3
Below Investment Grade or Other	1

(ii) If a counterparty does not have a long-term credit rating but has received a short-term credit rating from an NRSRO, the maximum capital exposure limit applicable to that counterparty shall be based upon the short-term credit rating, as determined in accordance with paragraph (a)(5) of this section, as follows:

(A) The highest short-term investment grade credit rating shall correspond to the maximum capital exposure limit provided in Table 4 of this part for the third highest long-term investment grade rating;

(B) The second highest short-term investment grade rating shall correspond to the maximum capital exposure limit provided in Table 4 of this part for the fourth highest long-term investment grade rating; and

(C) The third highest short-term investment grade rating shall correspond to the maximum capital exposure limit provided in Table 4 of this part for the fourth highest long-term investment grade rating.

(iii) If a specific debt obligation issued by a counterparty receives a credit rating from an NRSRO that is lower than the counterparty's long-term credit rating, the total amount of the lower-rated obligation held by the Bank may not exceed a sub-limit calculated in accordance with paragraph (a)(1) of this section, except that the Bank shall use the credit rating associated with the specific obligation to determine the applicable maximum capital exposure limit. For purposes of this paragraph, the credit rating of the debt obligation shall be determined in accordance with paragraph (a)(5) of this section.

(5) *Bank determination of applicable credit ratings.* The following criteria shall be applied to determine a counterparty's credit rating:

(i) The counterparty's most recent credit rating from a given NRSRO shall be considered;

(ii) If only one NRSRO has rated the counterparty, that NRSRO's rating shall be used. If a counterparty has received credit ratings from more than one NRSRO, the lowest credit rating from among those NRSROs shall be used;

(iii) Where a credit rating has a modifier, the credit rating is deemed to be the credit rating without the modifier;

(iv) If a counterparty is placed on a credit watch for a potential downgrade by an NRSRO, the credit rating from that NRSRO at the next lower grade shall be used; and

(v) If a counterparty is not rated by an NRSRO, the Bank shall determine the applicable credit rating by using credit rating standards available from an NRSRO or other similar standards.

(b) *Unsecured extensions of credit to affiliated counterparties.* (1) *In general.* The total amount of unsecured extensions of credit by a Bank to a group of affiliated counterparties that arise from the Bank's on- and off-balance sheet and derivative transactions, including sales of federal funds with a maturity of one day or less and sales of federal funds subject to a continuing contract, shall not exceed thirty percent of the Bank's total capital.

(2) *Relation to individual limits.* The aggregate limits calculated under this paragraph shall apply in addition to the limits on extensions of unsecured credit to a single counterparty imposed by paragraph (a) of this section.

(c) *Special limits for GSEs.* (1) *In general.* Unsecured extensions of credit by a Bank to a GSE that arise from the Bank's on- and off-balance sheet and derivative transactions, including from the purchase of any subordinated debt subject to the sub-limit set forth in paragraph (c)(2) of this section, from any sales of federal funds with a maturity of one day or less and from sales of federal funds subject to a continuing contract, shall not exceed the lesser of:

(i) The Bank's total capital; or

(ii) The GSE's total capital (as defined by the GSE's principal regulator) or some similar comparable measure identified by the Bank.

(2) *Sub-limit for subordinated debt.* The maximum amount of subordinated debt issued by a GSE and held by a Bank shall not exceed the term limit calculated under paragraph (a)(1) of this section, except that a Bank shall use the credit rating of the GSE's subordinated debt to determine the applicable maximum capital exposure limit. The credit rating of the subordinated debt shall be determined in accordance with paragraph (a)(5) of this section.

(3) *Limits applying to a GSE after a downgrade.* If any NRSRO assigns a credit rating to any senior debt obligation issued (or to be issued) by a

GSE that is below the highest investment grade or downgrades, or places on a credit watch for a potential downgrade of the credit rating on any senior unsecured obligation issued by a GSE to below the highest investment grade, the special limits on unsecured extensions of credit under paragraph (c)(1) of this section shall cease to apply, and instead, the Bank shall calculate the maximum amount of its unsecured extensions of credit to that GSE in accordance with paragraphs (a)(1) and (a)(2) of this section.

(4) *Extensions of unsecured credit to other Banks.* The limits of this section do not apply to unsecured credit extended by one Bank to another Bank.

(d) *Extensions of unsecured credit after downgrade or placement on credit watch.* If an NRSRO downgrades the credit rating applicable to any counterparty or places any counterparty on a credit watch for a potential downgrade, a Bank need not unwind or liquidate any existing transaction or position with that counterparty that complied with the limits of this section at the time it was entered. In such a case, however, a Bank may extend any additional unsecured credit to such a counterparty only in compliance with the limitations that are calculated using the lower maximum exposure limits. For the purposes of this section, the renewal of an existing unsecured extension of credit, including any decision not to terminate any sales of federal funds subject to a continuing contract, shall be considered an additional extension of unsecured credit that can be undertaken only in accordance with the lower limit.

(e) *Reporting requirements.* (1) *Total unsecured extensions of credit.* Each Bank shall report monthly to the Finance Board the amount of the Bank's total unsecured extensions of credit arising from on- and off-balance sheet and derivative transactions to any single counterparty or group of affiliated counterparties that exceeds 5 percent of:

(i) The Bank's total capital; or

(ii) The counterparty's, or affiliated counterparties' combined, Tier 1 capital, or if Tier 1 capital is not available, total capital (as defined by each counterparty's principal regulator) or some similar comparable measure identified by the Bank.

(2) *Total secured and unsecured extensions of credit.* Each Bank shall report monthly to the Finance Board the amount of the Bank's total secured and unsecured extensions of credit arising from on- and off-balance sheet and derivative transactions to any single counterparty or group of affiliated counterparties that exceeds 5 percent of the Bank's total assets.

(3) *Extensions of credit in excess of limits.* A Bank shall report promptly to the Finance Board any extensions of unsecured credit that exceeds any limit set forth in paragraphs (a), (b) or (c) of this section. In making this report, a Bank shall provide the name of the counterparty or group of affiliated counterparties to which the excess unsecured credit has been extended, the dollar amount of the applicable limit which has been exceeded, the dollar amount by which the Bank's extension of unsecured credit exceeds such limit, the dates for which the Bank was not in compliance with the limit, and, if applicable, a brief explanation of any extenuating circumstances which caused the limit to be exceeded.

(f) *Measurement of unsecured extensions of credit.* (1) *In general.* For purposes of this section, unsecured extensions of credit will be measured as follows:

(i) For on-balance sheet transactions, an amount equal to the sum of the book value of the item plus net payments due the Bank;

(ii) For off-balance sheet transactions, an amount equal to the credit equivalent amount of such item, calculated in accordance with § 932.4(f) of this part; and

(iii) For derivative transactions, an amount equal to the sum of the current and potential future credit exposures for the derivative contract, where those values are calculated in accordance with §§ 932.4(g) or 932.4(h) of this part, as applicable, less the amount of any collateral that is held in accordance with the requirements of § 932.4(e)(2)(ii)(B) of this part against the credit exposure from the derivative contract.

(2) *Status of debt obligations purchased by the Bank.* Any debt obligation or debt security (other than mortgage-backed securities or acquired member assets that are identified in §§ 955.2(a)(1) and (2) of this chapter) purchased by a Bank shall be considered an unsecured extension of credit for the purposes of this section, except:

(i) Any amount owed the Bank against which the Bank holds collateral in accordance with § 932.4(e)(2)(ii)(B) of this part; or

(ii) Any amount which the Finance Board has determined on a case-by-case basis shall not be considered an unsecured extension of credit.

(g) *Obligations of the United States.* Obligations of, or guaranteed by, the United States are not subject to the requirements of this section.

Dated: December 11, 2001.

By the Board of Directors of the Federal Housing Finance Board.

J. Timothy O'Neill,

Chairman.

[FR Doc. 01–31570 Filed 12–26–01; 8:45 am]

BILLING CODE 6725–01–P

DEPARTMENT OF TRANSPORTATION

Federal Aviation Administration

14 CFR Part 39

[Docket No. 2001–CE–29–AD; Amendment 39–12562; AD 2001–25–09]

RIN 2120–AA64

Airworthiness Directives; Dornier Luftfahrt GmbH Model 228–212 Airplanes

AGENCY: Federal Aviation Administration, DOT.

ACTION: Final rule.

SUMMARY: This amendment adopts a new airworthiness directive (AD) that applies to all Dornier Luftfahrt GmbH (Dornier) Model 228–212 airplanes that have a certain brake assembly installed. This AD requires you to inspect the brake housing subassembly for cracks, nicks, or corrosion (referred to as damage). This AD also requires you to replace damaged brake housing assemblies and modify the torque take-out cavity. This AD is the result of mandatory continuing airworthiness information (MCAI) issued by the airworthiness authority for Germany. The actions specified by this AD are intended to detect and correct damage to the brake housing assembly, which could result in failure of this assembly. Such failure could lead to loss of braking action on landing and possible loss of control of the airplane.

DATES: This AD becomes effective on January 18, 2002.

The Director of the Federal Register approved the incorporation by reference of certain publications listed in the regulations as of January 18, 2002.

ADDRESSES: You may get the service information referenced in this AD from Dornier Luftfahrt GmbH, Customer Support, P.O. Box 1103, D–82230 Wessling, Federal Republic of Germany; telephone: (08153) 300; facsimile: (08153) 304463. You may view this information at the Federal Aviation Administration (FAA), Central Region, Office of the Regional Counsel, Attention: Rules Docket No. 2001–CE–29–AD, 901 Locust, Room 506, Kansas City, Missouri 64106; or at the Office of

the Federal Register, 800 North Capitol Street, NW, suite 700, Washington, DC.

FOR FURTHER INFORMATION CONTACT: Karl Schletzbaum, Aerospace Engineer, FAA, Small Airplane Directorate, 901 Locust, Room 301, Kansas City, Missouri 64106; telephone: (816) 329–4146; facsimile: (816) 329–4090.

SUPPLEMENTARY INFORMATION:

Discussion

What events have caused this AD? The Luftfahrt-Bundesamt (LBA), which is the airworthiness authority for Germany, recently notified FAA that an unsafe condition may exist on all Dornier Model 228–212 airplanes equipped with brake assembly part-number 5009850–1, 5009850–2, 5009850–3, or 5009850–4. The LBA reports one occurrence of failure of the right-hand main landing gear (MLG) brake housing subassembly on one of the above-referenced airplanes. Failure of the brake housing assembly resulted in total loss of braking power.

The brake manufacturer, Aircraft Braking Systems Corporation (ABSC), has developed a modification to the torque take-out cavity of the brake housing assembly. The incorporation of this modification on Dornier Model 228–212 airplanes would prevent surface damage from developing into fatigue damage.

What is the potential impact if FAA took no action? Damage to the brake housing assembly, if not detected and corrected, could result in failure of this assembly. Such failure could result in loss of braking action on landing and possible loss of control of the airplane.

Has FAA taken any action to this point? We issued a proposal to amend part 39 of the Federal Aviation Regulations (14 CFR part 39) to include an AD that would apply to all Dornier Model 228–212 airplanes that have a certain brake assembly installed. This proposal was published in the **Federal Register** as a notice of proposed rulemaking (NPRM) on October 2, 2001 (66 FR 50125). The NPRM proposed to require you to inspect the brake housing subassembly for cracks, nicks, or corrosion (referred to as damage), replace damaged brake housing assemblies, and modify the torque take-out cavity.

Was the public invited to comment? The FAA encouraged interested persons to participate in the making of this amendment. We did not receive any comments on the proposed rule or on our determination of the cost to the public.

FAA's Determination

What is FAA's final determination on this issue? After careful review of all available information related to the subject presented above, we have determined that air safety and the public interest require the adoption of the rule as proposed except for minor editorial corrections. We have determined that these minor corrections:

—Provide the intent that was proposed in the NPRM for correcting the unsafe condition; and

—Do not add any additional burden upon the public than was already proposed in the NPRM.

Cost Impact

How many airplanes does this AD impact? We estimate that this AD affects 1 airplane in the U.S. registry.

What is the cost impact of this AD on owners/operators of the affected airplane? We estimate the following costs to accomplish the inspection:

Labor cost	Parts cost	Total cost per airplane	Total cost on U.S. operators
10 workhours × $60 per hour = $600	No parts required for the inspection	$600	$600

You will not need parts or special equipment to accomplish any necessary repairs after the inspection. The time necessary to accomplish any repairs is included in the inspection labor cost.

We estimate the following costs to accomplish any necessary replacements that will be required based on the results of the inspection. We have no way of determining the number of airplanes that may need such replacements.

Labor cost	Parts cost	Total cost per airplane
9 workhours × $60 per hour = $540	$46	$586

ABSC will provide labor reimbursement for the modification to the torque take-out cavity of the brake housing to the extent noted in Service Bulletin Do228–212–13, dated December 15, 2000.

Regulatory Impact

Does this AD impact various entities? The regulations adopted herein will not have a substantial direct effect on the States, on the relationship between the national government and the States, or on the distribution of power and responsibilities among the various levels of government. Therefore, it is determined that this final rule does not have federalism implications under Executive Order 13132.

Does this AD involve a significant rule or regulatory action? For the reasons discussed above, I certify that this action (1) is not a ''significant regulatory action'' under Executive Order 12866; (2) is not a ''significant rule'' under DOT Regulatory Policies and Procedures (44 FR 11034, February 26, 1979); and (3) will not have a significant economic impact, positive or negative, on a substantial number of small entities under the criteria of the Regulatory Flexibility Act. A copy of the final evaluation prepared for this action is contained in the Rules Docket. A copy of it may be obtained by contacting the Rules Docket at the location provided under the caption **ADDRESSES.**

List of Subjects in 14 CFR Part 39

Air transportation, Aircraft, Aviation safety, Incorporation by reference, Safety.

Adoption of the Amendment

Accordingly, under the authority delegated to me by the Administrator, the Federal Aviation Administration amends part 39 of the Federal Aviation Regulations (14 CFR part 39) as follows:

PART 39—AIRWORTHINESS DIRECTIVES

1. The authority citation for part 39 continues to read as follows:

Authority: 49 U.S.C. 106(g), 40113, 44701.

§ 39.13 [Amended]

2. FAA amends § 39.13 by adding a new AD to read as follows:

2001–25–09 Dornier Luftfahrt GMBH: Amendment 39–12562; Docket No. 2001–CE–29–AD.

(a) *What airplanes are affected by this AD?* This AD affects Model 228–212 airplanes, all serial numbers, that are:

(1) certificated in any category; and

(2) equipped with brake assembly part-number 5009850–1, 5009850–2, 5009850–3, or 5009850–4.

(b) *Who must comply with this AD?* Anyone who wishes to operate any of the above airplanes must comply with this AD.

(c) *What problem does this AD address?* The actions specified by this AD are intended to detect and correct damage to the brake housing assembly, which could result in failure of this assembly. Such failure could lead to loss of braking action on landing and possible loss of control of the airplane.

(d) *What actions must I accomplish to address this problem?* To address this problem, you must accomplish the following:

Actions	Compliance	Procedures
(1) Inspect, using both visual and eddy current methods, the brake housing subassembly for damage (cracks, nicks, corrosion, etc.), and accomplish the following: (i) Replace the brake housing if damage is found in the torque take-out cavity in the area specified in the referenced service information; or (ii) Repair the brake housing if damage is found on the walls of the torque take-out cavity and the width exceeds the maximum limit specified in the referenced service information.	Inspect within the next 300 hours time-in-service (TIS) after January 18, 2002, the effective date of this AD. Repair or replace prior to further flight.	In accordance with Aircraft Braking Systems Corporation Service Bulletin Do228–212–32–13, dated December 15, 2000, and Aircraft Braking Systems Corporation Service Bulletin Do228–212–32–12, dated November 15, 2000, as specified in Fairchild/Dornier Dornier 228 Service Bulletin SB–228–236, issued January 11, 2001.
(2) Modify the torque take-out cavity of the brake housing assembly.	Prior to further flight after the inspection required by paragraph (d)(1) of this AD, and thereafter prior to the installation of a brake housing subassembly.	In accordance with Aircraft Braking System Corporation Service Bulletin Do228–212–32–13, dated December 15, 2000, and Aircraft Braking Systems Corporation Service Bulletin Do228–212–32–12, dated November 15, 2000, as specified in Fairchild/Dornier Dornier 228 Service Bulletin SB–228–236, issued January 11, 2001.
(3) Do not install any brake housing assembly (or FAA-approved equivalent part number) unless it has been inspected as required in paragraph (d)(1) of this AD, is damage free or repaired as required in paragraph (d)(1)(ii) of this AD; and modified as required in paragraph (d)(2) of this AD.	As of January 18, 2002, the effective date of this AD.	Not applicable.

(e) *Can I comply with this AD in any other way?* You may use an alternative method of compliance or adjust the compliance time if:

(1) Your alternative method of compliance provides an equivalent level of safety; and

(2) The Manager, Small Airplane Directorate, approves your alternative. Submit your request through an FAA Principal Maintenance Inspector, who may add comments and then send it to the Manager, Small Airplane Directorate.

Note 1: This AD applies to each airplane identified in paragraph (a) of this AD, regardless of whether it has been modified, altered, or repaired in the area subject to the requirements of this AD. For airplanes that have been modified, altered, or repaired so that the performance of the requirements of this AD is affected, the owner/operator must request approval for an alternative method of compliance in accordance with paragraph (e) of this AD. The request should include an assessment of the effect of the modification, alteration, or repair on the unsafe condition addressed by this AD; and, if you have not eliminated the unsafe condition, specific actions you propose to address it.

(f) *Where can I get information about any already-approved alternative methods of compliance?* Contact Karl Schletzbaum, Aerospace Engineer, FAA, Small Airplane Directorate, 901 Locust, Room 301, Kansas City, Missouri 64106; telephone: (816) 329–4146; facsimile: (816) 329–4090.

(g) *What if I need to fly the airplane to another location to comply with this AD?* The FAA can issue a special flight permit under sections 21.197 and 21.199 of the Federal Aviation Regulations (14 CFR 21.197 and 21.199) to operate your airplane to a location where you can accomplish the requirements of this AD.

(h) *Are any service bulletins incorporated into this AD by reference?* Actions required by this AD must be done in accordance with Aircraft Braking Systems Corporation Service Bulletin Do228–212–32–13, dated December 15, 2000, Aircraft Braking Systems Corporation Service Bulletin Do228–212–32–12, dated November 15, 2000, and Fairchild/Dornier Dornier 228 Service Bulletin SB–228–236, issued January 11, 2001. The Director of the Federal Register approved this incorporation by reference under 5 U.S.C. 552(a) and 1 CFR part 51. You can get copies from Dornier Luftfahrt GmbH, Customer Support, P.O. Box 1103, D-82230 Wessling, Federal Republic of Germany. You can look at copies at the FAA, Central Region, Office of the Regional Counsel, 901 Locust, Room 506, Kansas City, Missouri, or at the Office of the Federal Register, 800 North Capitol Street, NW., suite 700, Washington, DC.

Note 2: The subject of this AD is addressed in German AD Number 2001–164, dated June 14, 2001.

(i) *When does this amendment become effective?* This amendment becomes effective on January 18, 2002.

Issued in Kansas City, Missouri, on December 11, 2001.

Michael Gallagher,

Manager, Small Airplane Directorate, Aircraft Certification Service.

[FR Doc. 01–31297 Filed 12–26–01; 8:45 am]

BILLING CODE 4910–13–P

DEPARTMENT OF TRANSPORTATION

Federal Aviation Administration

14 CFR Part 39

[Docket No. 2000–NM–247–AD; Amendment 39–12572; AD 2001–26–08]

RIN 2120–AA64

Airworthiness Directives; Airbus Model A300 B2 Series Airplanes and Model A300 B4–2C, B4–103, and B4–203 Series Airplanes

AGENCY: Federal Aviation Administration, DOT.

ACTION: Final rule.

SUMMARY: This amendment adopts a new airworthiness directive (AD), applicable to all Airbus Model A300 B2 series airplanes and Model A300 B4–2C, B4–103, and B4–203 series airplanes, that requires identifying the types and areas of repairs on the airplane between frame 10 and frame 80, and performing follow-on actions for certain repairs. These actions are necessary to detect and correct fatigue cracking of certain repairs of the fuselage between frame 10 and frame 80, which could result in reduced structural integrity of the airplane. These actions are intended to address the identified unsafe condition.

DATES: Effective January 31, 2002.

The incorporation by reference of certain publications listed in the regulations is approved by the Director of the Federal Register as of January 31, 2002.

ADDRESSES: The service information referenced in this AD may be obtained from Airbus Industrie, 1 Rond Point Maurice Bellonte, 31707 Blagnac Cedex, France. This information may be examined at the Federal Aviation Administration (FAA), Transport Airplane Directorate, Rules Docket, 1601 Lind Avenue, SW., Renton, Washington; or at the Office of the Federal Register, 800 North Capitol Street, NW., suite 700, Washington, DC.

FOR FURTHER INFORMATION CONTACT: Dan Rodina, Aerospace Engineer, International Branch, ANM–116, FAA, Transport Airplane Directorate, 1601 Lind Avenue, SW., Renton, Washington 98055–4056; telephone (425) 227–2125; fax (425) 227–1149.

SUPPLEMENTARY INFORMATION: A proposal to amend part 39 of the Federal Aviation Regulations (14 CFR part 39) to include an airworthiness directive (AD) that is applicable to all Airbus Model A300 B2 and B4 series airplanes was published in the **Federal Register** on August 28, 2001 (66 FR 45192). That action proposed to require identifying the types and areas of repairs on the airplane between frame 10 and frame 80, and performing follow-on actions for certain repairs.

Comments

Interested persons have been afforded an opportunity to participate in the making of this amendment. Due consideration has been given to the comments received.

Revise Applicability Statement of Proposed AD

One commenter requests that the FAA revise the applicability statement of the proposed AD to exclude Model A300 B4–600 series airplanes. The commenter states that this is an appropriate change because French airworthiness directive 2000–261–312(B), dated June 28, 2000 (which is the French airworthiness directive corresponding to the proposed AD), and Airbus Service Bulletin A300–53–0313, Revision 01, dated April 27, 1999 (which the proposed AD refers to as the appropriate source of service information for certain actions therein), do not apply to Model A300 B4–600 series airplanes.

We concur with the commenter's request. We do not intend this AD to apply to Model A300 B4–600 series airplanes. However, based on the commenter's request, we recognize that the identification of the affected airplanes models in the proposed rule could potentially confuse some owner/operators. Therefore, we have revised the applicability statement of this AD, as well as the title and summary sections in the preamble of this AD, to clarify that this AD applies to all Airbus Model A300 B2 series airplanes and Model A300 B4–2C, B4–103, and B4–203 series airplanes.

Request To Provide for Modified Airplanes

One commenter, a supplemental type certificate (STC) holder, requests that we provide a different follow-on action for airplanes that have been converted from passenger airplanes to freighters according to a specific STC. The commenter explains that such conversion results in increased loads on certain fuselage skin panels on the airplane. The commenter states that, if an operator of a converted airplane identifies an existing repair that is subject to this AD on one of the fuselage skin panels affected by the conversion, the operator should contact the STC holder for assistance in evaluating the repair.

We do not concur that any change is necessary in this regard, though we do concur that the operator should contact the STC holder for assistance in evaluating the repair. Note 1 of this AD specifies that, if an airplane has been modified in such a way that the AD requirements have been affected, the owner/operator must request approval of an alternative method of compliance in accordance with paragraph (d) of this AD. This provision would apply to airplanes modified per the commenter's STC.

Conclusion

After careful review of the available data, including the comments noted above, the FAA has determined that air safety and the public interest require the adoption of the rule with the change described previously. The FAA has determined that this change will neither increase the economic burden on any operator nor increase the scope of the AD.

Cost Impact

The FAA estimates that 13 airplanes of U.S. registry will be affected by this AD, that it will take approximately 2 work hours per airplane to accomplish the required actions, and that the average labor rate is $60 per work hour. Based on these figures, the cost impact of this AD on U.S. operators is estimated to be $1,560, or $120 per airplane.

The cost impact figure discussed above is based on assumptions that no operator has yet accomplished any of the requirements of this AD action, and that no operator would accomplish those actions in the future if this AD were not adopted. The cost impact figures discussed in AD rulemaking actions represent only the time necessary to perform the specific actions actually required by the AD. These figures typically do not include incidental costs, such as the time required to gain access and close up, planning time, or time necessitated by other administrative actions.

Regulatory Impact

The regulations adopted herein will not have a substantial direct effect on the States, on the relationship between the national Government and the States, or on the distribution of power and responsibilities among the various levels of government. Therefore, it is determined that this final rule does not have federalism implications under Executive Order 13132.

For the reasons discussed above, I certify that this action (1) is not a ''significant regulatory action'' under Executive Order 12866; (2) is not a ''significant rule'' under DOT Regulatory Policies and Procedures (44 FR 11034, February 26, 1979); and (3)

will not have a significant economic impact, positive or negative, on a substantial number of small entities under the criteria of the Regulatory Flexibility Act. A final evaluation has been prepared for this action and it is contained in the Rules Docket. A copy of it may be obtained from the Rules Docket at the location provided under the caption **ADDRESSES.**

List of Subjects in 14 CFR Part 39

Air transportation, Aircraft, Aviation safety, Incorporation by reference, Safety.

Adoption of the Amendment

Accordingly, pursuant to the authority delegated to me by the Administrator, the Federal Aviation Administration amends part 39 of the Federal Aviation Regulations (14 CFR part 39) as follows:

PART 39—AIRWORTHINESS DIRECTIVES

1. The authority citation for part 39 continues to read as follows:

Authority: 49 U.S.C. 106(g), 40113, 44701.

§ 39.13 [Amended]

2. Section 39.13 is amended by adding the following new airworthiness directive:

2001–26–08 Airbus: Amendment 39–12572. Docket 2000–NM–247–AD.

Applicability: All Model A300 B2 series airplanes and Model A300 B4–2C, B4–103, and B4–203 series airplanes, certificated in any category.

Note 1: This AD applies to each airplane identified in the preceding applicability provision, regardless of whether it has been modified, altered, or repaired in the area subject to the requirements of this AD. For airplanes that have been modified, altered, or repaired so that the performance of the requirements of this AD is affected, the owner/operator must request approval for an alternative method of compliance in accordance with paragraph (d) of this AD. The request should include an assessment of the effect of the modification, alteration, or repair on the unsafe condition addressed by this AD; and, if the unsafe condition has not been eliminated, the request should include specific proposed actions to address it.

Compliance: Required as indicated, unless accomplished previously.

To detect and correct fatigue cracking of certain repairs of the fuselage between frame 10 and frame 80, which could result in reduced structural integrity of the airplane, accomplish the following:

Identification of Repairs

(a) Before 10,000 total landings, or before 2,500 landings after the effective date of this AD, whichever occurs later: Identify the types and areas of repairs on the airplane between frame 10 and frame 80, as specified in Airbus Service Bulletin A300–53–0313, Revision 01, dated April 27, 1999. Do the actions per the Accomplishment Instructions of the service bulletin. If none of the repairs specified in the service bulletin are found, no additional action is needed under this AD.

Follow-On Actions

(b) If, during the inspection, any repair is found that meets the criteria specified in Airbus Service Bulletin A300–53–0313, Revision 01, dated April 27, 1999: Do either an eddy current or ultrasonic inspection, depending on the type of repair found, to detect cracking of the applicable area identified in Flow Chart 1, Figure 1, Sheet 1, of the service bulletin. Do the inspection at the time and in the manner specified in the service bulletin. Based on the results of the inspection, take the actions shown in the following table:

TABLE 1.—FOLLOW-ON ACTIONS

If the following is found:	Then—	Per this schedule:
(1) No cracking	Repeat the inspection	At least every 2,500 landings.
(2) Any cracking	Replace the repair per a method approved by either the Manager, International Branch, ANM–116, FAA, Transport Airplane Directorate, or the Direction Générale de l'Aviation Civile (DGAC) (or its delegated agent).	Before further flight.

Terminating Action

(c) Replacement of a repair that is specified in Airbus Service Bulletin A300–53–0313, Revision 01, dated April 27, 1999, per a method approved by either the Manager, International Branch, ANM–116, or the DGAC (or its delegated agent), terminates the requirements of this AD.

Alternative Methods of Compliance

(d) An alternative method of compliance or adjustment of the compliance time that provides an acceptable level of safety may be used if approved by the Manager, International Branch, ANM–116. Operators shall submit their requests through an appropriate FAA Principal Maintenance Inspector, who may add comments and then send it to the Manager, International Branch, ANM–116.

Note 2: Information concerning the existence of approved alternative methods of compliance with this AD, if any, may be obtained from the International Branch, ANM–116.

Special Flight Permits

(e) Special flight permits may be issued in accordance with sections 21.197 and 21.199 of the Federal Aviation Regulations (14 CFR 21.197 and 21.199) to operate the airplane to a location where the requirements of this AD can be accomplished.

Incorporation by Reference

(f) Except as provided in Table 1 and paragraph (c) of this AD, the actions shall be done in accordance with Airbus Service Bulletin A300–53–0313, Revision 01, dated April 27, 1999. This incorporation by reference was approved by the Director of the Federal Register in accordance with 5 U.S.C. 552(a) and 1 CFR part 51. Copies may be obtained from Airbus Industrie, 1 Rond Point Maurice Bellonte, 31707 Blagnac Cedex, France. Copies may be inspected at the FAA, Transport Airplane Directorate, 1601 Lind Avenue, SW., Renton, Washington; or at the Office of the Federal Register, 800 North Capitol Street, NW., suite 700, Washington, DC.

Note 3: The subject of this AD is addressed in French airworthiness directive 2000–261–312(B), dated June 28, 2000.

Effective Date

(g) This amendment becomes effective on January 31, 2002.

Issued in Renton, Washington, on December 14, 2001.

Kalene C. Yanamura,

Acting Manager, Transport Airplane Directorate, Aircraft Certification Service.

[FR Doc. 01–31428 Filed 12–26–01; 8:45 am]

BILLING CODE 4910–13–P

DEPARTMENT OF TRANSPORTATION

Federal Aviation Administration

14 CFR Part 39

[Docket No. 2000–NM–351–AD; Amendment 39–12573; AD 2001–26–09]

RIN 2120–AA64

Airworthiness Directives; Boeing Model 767–200 Series Airplanes

AGENCY: Federal Aviation Administration, DOT.

ACTION: Final rule.

SUMMARY: This amendment adopts a new airworthiness directive (AD), applicable to certain Boeing Model 767–

200 series airplanes, that requires a one-time inspection of the water line heater tape where it passes close to the duct assemblies of the air distribution system for the flight compartment to detect damage, and follow-on actions. This amendment also requires eventual replacement of certain duct assemblies or foam insulation on those duct assemblies with new duct assemblies or improved foam insulation. This action is necessary to prevent ignition of foam insulation on the air distribution ducts, which could result in a fire in the airplane. This action is intended to address the identified unsafe condition.

DATES: Effective January 31, 2002.

The incorporation by reference of certain publications listed in the regulations is approved by the Director of the Federal Register as of January 31, 2002.

ADDRESSES: The service information referenced in this AD may be obtained from Boeing Commercial Airplane Group, P.O. Box 3707, Seattle, Washington 98124–2207. This information may be examined at the Federal Aviation Administration (FAA), Transport Airplane Directorate, Rules Docket, 1601 Lind Avenue, SW., Renton, Washington; or at the Office of the Federal Register, 800 North Capitol Street, NW., Suite 700, Washington, DC.

FOR FURTHER INFORMATION CONTACT: Don Eiford, Aerospace Engineer, Systems and Equipment Branch, ANM–130S, FAA, Seattle Aircraft Certification Office, 1601 Lind Avenue, SW., Renton, Washington 98055–4056; telephone (425) 227–2788; fax (425) 227–1181.

SUPPLEMENTARY INFORMATION: A proposal to amend part 39 of the Federal Aviation Regulations (14 CFR part 39) to include an airworthiness directive (AD) that is applicable to certain Boeing Model 767–200 series airplanes was published in the **Federal Register** on May 14, 2001 (66 FR 24306). That action proposed to require replacement of certain duct assemblies of the air distribution system for the flight compartment with new duct assemblies with improved insulation, and follow-on actions.

Comments

Interested persons have been afforded an opportunity to participate in the making of this amendment. Due consideration has been given to the comments received.

Two commenters concur with the proposed rule.

Change Paragraph (a)

Three commenters ask that paragraph (a) of the proposed rule be changed, as follows:

One commenter states that the proposed AD is similar to AD 2000–26–05, amendment 39–12055 (65 FR 82898, December 29, 2000). That AD requires modification of the environmental control system ducts for Model 737, 747, 757, and 767 series airplanes within 6 years after the effective date of the AD. The commenter asks that the compliance time in this proposed AD be changed to allow 18 months for verification of proper clearance between the water line heater tape and the duct assemblies of the air distribution system for the flight compartment, and 6 years for duct insulation replacement, similar to the compliance time allowed by AD 2000–26–05.

The second commenter asks that the compliance time be changed to specify doing the one-time general visual inspection of the water line heater tape, as specified in paragraph (a)(2) of the proposed rule, within 18 months, and then the replacement of the duct assemblies, as specified in paragraph (a)(1) of the proposed rule, within 6 years. The commenter states that, since the burned duct was ignited by an overheated water line heater tape routed too close to a duct assembly, this sequence of actions would ensure an equivalent level of safety, while providing operators the opportunity to replace the duct assemblies at an aircraft's heavy maintenance visit.

The third commenter, Air Transport Association, states that the original equipment manufacturer is developing a service bulletin which will allow replacement of the BMS 8–39 foam insulation on the ducts of the air distribution system for the flight compartment with BMS 8–300 foam. Inclusion of this option in the AD would minimize any need for the replacement of the duct assemblies as the means for installing the new insulation material. The commenter adds that requiring inspection and corrective action to ensure proper clearance between the duct and heater tape within 18 months after the effective date of the AD is prudent. The commenter states that once these actions are satisfactorily completed, an acceptable level of safety would be attained, and safe operations could be continued. The commenter also recommends issuing a supplemental notice of proposed rulemaking to address the revised instructions specified above.

We concur with the commenters. Since the issuance of the proposed rule the FAA has reviewed and approved Boeing Alert Service Bulletin 767–21A0154, Revision 1, dated August 9, 2001. The service bulletin adds an option to replace the existing BMS 8–39 foam insulation on the ducts of the air distribution system for the flight compartment with BMS 8–300 polyimide foam insulation, and recommends inspection of the water line heater tape within 18 months. Therefore, per the revised bulletin and the above comments, the FAA agrees to require either replacement of the duct assemblies or the foam insulation, and to extend the compliance time for that replacement. Revision 1 also has been added as the source of service information for accomplishment of the required actions, and a new Note 3 has been added to give credit for previous accomplishment of certain actions per Boeing Alert Service Bulletin 767–21A0154, dated March 16, 2000 (which was listed as the source of service information for accomplishment of the actions specified in the proposed rule). This new requirement gives operators the option of either replacement of the duct assemblies or the foam insulation, and does not add any additional work. Therefore, issuing a supplemental notice of proposed rulemaking is not necessary.

Paragraph (a) of the final rule has been changed to require an 18-month compliance time for the one-time general visual inspection of the water line heater tape for damage, and follow-on actions; and a new paragraph (b) has been added to expand the compliance time to 6 years for either replacement of the duct assemblies or replacement of the existing BMS 8–39 foam insulation on the ducts with BMS 8–300 polyimide foam insulation. The Summary section in this final rule also has been revised accordingly.

Change Preamble in Proposed Rule

One commenter expands on the language in the Discussion section in the preamble of the proposed rule by stating that the foam insulation was compliant with flammability regulations at the time of airplane delivery. The FAA infers that the commenter wants this information added to the final rule. We acknowledge that certain information in that section could be changed for clarification purposes. However, since that section of the proposed rule does not appear in the final rule, no change to the final rule is necessary in this regard.

Conclusion

After careful review of the available data, including the comments noted above, the FAA has determined that air safety and the public interest require the adoption of the rule with the changes previously described. The FAA has determined that these changes will neither increase the economic burden on any operator nor increase the scope of the AD.

Cost Impact

There are approximately 81 airplanes of the affected design in the worldwide fleet. The FAA estimates that 52 airplanes of U.S. registry will be affected by this AD, that it will take approximately 1 work hour per airplane to do the general visual inspection, at an average labor rate of $60 per work hour. Based on these figures, the cost impact of the inspection required by this AD on U.S. operators is estimated to be $3,120, or $60 per airplane.

The replacement of the duct assemblies is one option for compliance with this AD action and will take approximately 2 work hours to accomplish, at an average labor rate of $60 per work hour. Required parts will cost a maximum of $7,285 per airplane. Based on these figures, the cost impact of the replacement of the duct assemblies required by this AD is estimated to be $7,405 per airplane.

In lieu of replacement of the duct assemblies, this AD provides for replacement of the foam insulation on the ducts. It will take approximately 3 work hours to accomplish, at an average labor rate of $60 per work hour. Based on these figures, the cost impact of the replacement of the foam insulation required by this AD is estimated to be $180 per airplane.

The cost impact figures discussed above are based on assumptions that no operator has yet accomplished any of the requirements of this AD action, and that no operator would accomplish those actions in the future if this AD were not adopted. The cost impact figures discussed in AD rulemaking actions represent only the time necessary to perform the specific actions actually required by the AD. These figures typically do not include incidental costs, such as the time required to gain access and close up, planning time, or time necessitated by other administrative actions.

Regulatory Impact

The regulations adopted herein will not have a substantial direct effect on the States, on the relationship between the national Government and the States, or on the distribution of power and responsibilities among the various levels of government. Therefore, it is determined that this final rule does not have federalism implications under Executive Order 13132.

For the reasons discussed above, I certify that this action (1) is not a ''significant regulatory action'' under Executive Order 12866; (2) is not a ''significant rule'' under DOT Regulatory Policies and Procedures (44 FR 11034, February 26, 1979); and (3) will not have a significant economic impact, positive or negative, on a substantial number of small entities under the criteria of the Regulatory Flexibility Act. A final evaluation has been prepared for this action and it is contained in the Rules Docket. A copy of it may be obtained from the Rules Docket at the location provided under the caption **ADDRESSES.**

List of Subjects in 14 CFR Part 39

Air transportation, Aircraft, Aviation safety, Incorporation by reference, Safety.

Adoption of the Amendment

Accordingly, pursuant to the authority delegated to me by the Administrator, the Federal Aviation Administration amends part 39 of the Federal Aviation Regulations (14 CFR part 39) as follows:

PART 39—AIRWORTHINESS DIRECTIVES

1. The authority citation for part 39 continues to read as follows:

Authority: 49 U.S.C. 106(g), 40113, 44701.

§ 39.13 [Amended]

2. Section 39.13 is amended by adding the following new airworthiness directive:

2001–26–09 Boeing: Amendment 39–12573. Docket 2000–NM–351–AD.

Applicability: Model 767–200 series airplanes, as listed in Boeing Alert Service Bulletin 767–21A0154, dated March 16, 2000; certificated in any category.

Note 1: This AD applies to each airplane identified in the preceding applicability provision, regardless of whether it has been modified, altered, or repaired in the area subject to the requirements of this AD. For airplanes that have been modified, altered, or repaired so that the performance of the requirements of this AD is affected, the owner/operator must request approval for an alternative method of compliance in accordance with paragraph (c) of this AD. The request should include an assessment of the effect of the modification, alteration, or repair on the unsafe condition addressed by this AD; and, if the unsafe condition has not been eliminated, the request should include specific proposed actions to address it.

Compliance: Required as indicated, unless accomplished previously.

To prevent ignition of foam insulation on the air distribution ducts, which could result in a fire in the airplane, accomplish the following:

Inspection and Follow-on Actions

(a) Within 18 months after the effective date of this AD: Do a one-time general visual inspection of the water line heater tape where it passes close to the duct assemblies of the air distribution system for the flight compartment to detect damage; including wear, chafing, pinching, discoloration, localized burn marks, etc; per the Accomplishment Instructions of Boeing Alert Service Bulletin 767–21A0154, Revision 1, dated August 9, 2001.

(1) If no damage is detected, before further flight, measure the clearance between the duct assemblies and the water line heater tape. If clearance is less than 0.25 inch, before further flight, re-route the heater tape per the service bulletin.

(2) If any damage is detected, before further flight, replace the heater tape with new heater tape, per the service bulletin. When installing the new tape, make sure that clearance between the water line heater tape and the duct assemblies is a minimum of 0.25 inch.

Note 2: For the purposes of this AD, a general visual inspection is defined as: ''A visual examination of an interior or exterior area, installation, or assembly to detect obvious damage, failure, or irregularity. This level of inspection is made under normally available lighting conditions such as daylight, hangar lighting, flashlight, or drop-light, and may require removal or opening of access panels or doors. Stands, ladders, or platforms may be required to gain proximity to the area being checked.''

Replacement

(b) Within 6 years after the effective date of this AD, do the actions specified in paragraph (b)(1) or (b)(2) of this AD, per the Accomplishment Instructions of Boeing Alert Service Bulletin 767–21A0154, Revision 1, dated August 9, 2001. Before further flight after doing the applicable action, do a general visual inspection to make sure that clearance between the water line heater tape and the duct assemblies is a minimum of 0.25 inch. If clearance is less than 0.25 inch, before further flight, re-route the heater tape per the service bulletin.

(1) Replace the duct assemblies of the air distribution system for the flight compartment (which are located under the main deck) with new duct assemblies having fiberglass insulation; or

(2) Replace the existing BMS 8–39 foam insulation on the ducts of the air distribution system for the flight compartment (which are located under the main deck) with BMS 8–300 polyimide foam insulation.

Note 3: Inspection, replacement and follow-on actions done before the effective date of this AD per Boeing Alert Service Bulletin 767–21A0154, dated March 16, 2000, are considered acceptable for

compliance with the applicable actions specified in paragraphs (a) and (b) of this AD.

Alternative Methods of Compliance

(c) An alternative method of compliance or adjustment of the compliance time that provides an acceptable level of safety may be used if approved by the Manager, Seattle Aircraft Certification Office (ACO), FAA. Operators shall submit their requests through an appropriate FAA Principal Maintenance Inspector, who may add comments and then send it to the Manager, Seattle ACO.

Note 4: Information concerning the existence of approved alternative methods of compliance with this AD, if any, may be obtained from the Seattle ACO.

Special Flight Permits

(d) Special flight permits may be issued in accordance with sections 21.197 and 21.199 of the Federal Aviation Regulations (14 CFR 21.197 and 21.199) to operate the airplane to a location where the requirements of this AD can be accomplished.

Incorporation by Reference

(e) The actions shall be done in accordance with Boeing Alert Service Bulletin 767–21A0154, Revision 1, including Appendix A, dated August 9, 2001. This incorporation by reference was approved by the Director of the Federal Register in accordance with 5 U.S.C. 552(a) and 1 CFR part 51. Copies may be obtained from Boeing Commercial Airplane Group, P.O. Box 3707, Seattle, Washington 98124–2207. Copies may be inspected at the FAA, Transport Airplane Directorate, 1601 Lind Avenue, SW., Renton, Washington; or at the Office of the Federal Register, 800 North Capitol Street, NW., suite 700, Washington, DC.

Effective Date

(f) This amendment becomes effective on January 31, 2002.

Issued in Renton, Washington, on December 14, 2001.

Kalene C. Yanamura,

Acting Manager, Transport Airplane Directorate, Aircraft Certification Service.

[FR Doc. 01–31429 Filed 12–26–01; 8:45 am]

BILLING CODE 4910–13–P

DEPARTMENT OF TRANSPORTATION

Federal Aviation Administration

14 CFR Part 39

[Docket No. 2001–NM–361–AD; Amendment 39–12571; AD 2001–26–07]

RIN 2120–AA64

Airworthiness Directives; Gulfstream Model G–IV Series Airplanes

AGENCY: Federal Aviation Administration, DOT.

ACTION: Final rule; request for comments.

SUMMARY: This amendment adopts a new airworthiness directive (AD) that is applicable to certain Gulfstream Model G–IV series airplanes. This action requires an inspection of the electrical connections for the fire extinguisher bottles; an inspection after any subsequent maintenance affecting the fire extinguisher bottles; and corrective action, if necessary. This action is prompted by a report indicating that the electrical connections for the fire extinguisher bottle squibs had been improperly installed either during manufacturing or during subsequent maintenance. This action is necessary to prevent fire extinguishing agent from being discharged into the wrong location, which could result in failure to extinguish an in-flight fire on an affected engine and jeopardize operation of the opposite engine.

DATES: Effective January 11, 2002.

The incorporation by reference of certain publications listed in the regulations is approved by the Director of the Federal Register as of January 11, 2002.

Comments for inclusion in the Rules Docket must be received on or before January 28, 2002.

ADDRESSES: Submit comments in triplicate to the Federal Aviation Administration (FAA), Transport Airplane Directorate, ANM–114, Attention: Rules Docket No. 2001–NM–361–AD, 1601 Lind Avenue, SW., Renton, Washington 98055–4056. Comments may be inspected at this location between 9:00 a.m. and 3:00 p.m., Monday through Friday, except Federal holidays. Comments may be submitted via fax to (425) 227–1232. Comments may also be sent via the Internet using the following address: 9-anm-iarcomment@faa.gov. Comments sent via the Internet must contain ''Docket No. 2001–NM–361–AD'' in the subject line and need not be submitted in triplicate. Comments sent via fax or the Internet as attached electronic files must be formatted in Microsoft Word 97 for Windows or ASCII text.

The service information referenced in this AD may be obtained from Gulfstream Aerospace Corporation, P.O. Box 2206, M/S D–10, Savannah, Georgia 31402–9980. This information may be examined at the FAA, Transport Airplane Directorate, 1601 Lind Avenue, SW., Renton, Washington; or at the FAA, Atlanta Aircraft Certification Office, One Crown Center, 1895 Phoenix Boulevard, suite 450, Atlanta, Georgia 30349; or at the Office of the Federal Register, 800 North Capitol Street, NW., suite 700, Washington, DC.

FOR FURTHER INFORMATION CONTACT: John J. Philbin, Aerospace Engineer, Systems and Flight Test Branch, ACE–116A, FAA, Atlanta Aircraft Certification Office, One Crown Center, 1895 Phoenix Boulevard, suite 450, Atlanta, Georgia 30349; telephone (770) 703–6072; fax (770) 703–6097.

SUPPLEMENTARY INFORMATION: The FAA has received a report that, during an inspection of a Gulfstream Model G–IV series airplane, the electrical connections for the left and right fire extinguisher bottle squibs were found to be improperly installed. The improper installation occurred either during manufacturing or during subsequent maintenance affecting the fire extinguisher bottles. The manufacturer states that a contributing factor for improper connection of the fire extinguisher bottle is the potential for the identification labels to migrate up the wiring harness, which increases the possibility for a technician to connect the wiring to incorrect terminals. This condition, if not corrected, could cause fire extinguishing agent to be discharged into the wrong location, which could result in failure to extinguish an in-flight fire on an affected engine and jeopardize operation of the opposite engine.

FAA Determination

The FAA has determined that issuance of this AD, applicable to Gulfstream Model G–IV series airplanes, serial numbers 1253 through 1464 inclusive, is necessary because of the potential for improper connection of the electrical connections, as described previously. The FAA adds that wire marking tags often have been found much farther from the terminal ends than intended by the design, and it is uncertain when the discrepancies in tag installation began during production.

However, the FAA has been notified by the manufacturer that the identified unsafe condition has been addressed on Model G–IV series airplanes, serial numbers 1465 and subsequent, by a clarification in the build instructions. Therefore, it is unnecessary to include those airplanes in the applicability of this AD.

Explanation of Relevant Service Information

The FAA has reviewed and approved Gulfstream GIV Alert Customer Bulletin No. 30, dated November 2, 2001, which describes procedures for an inspection of the electrical connections for the engine fire extinguisher bottles; and corrective action, if necessary.

Explanation of the Requirements of the Rule

Since an unsafe condition has been identified that is likely to exist or develop on other airplanes of the same type design, this AD is being issued to prevent fire extinguishing agent from being discharged into the wrong location, which could result in failure to extinguish an in-flight fire on an affected engine and jeopardize operation of the opposite engine. This AD requires accomplishment of the actions specified in the alert customer bulletin described previously, except as discussed below. This AD also requires that operators report the results of the inspection findings (both positive and negative) to the FAA.

Differences Between Service Bulletin and This AD

Because it is not known whether the improper installation of the electrical connections for the fire extinguisher bottles occurred during the manufacturing process or during subsequent maintenance, this AD requires inspection of those electrical connections following any maintenance affecting the fire extinguisher bottles. The alert customer bulletin does not refer to inspection following maintenance. This AD also requires that inspection findings be reported to the FAA, whereas the alert customer bulletin recommends notice to Gulfstream that the Accomplishment Instructions of the alert customer bulletin have been performed.

Interim Action

This is considered to be interim action until final action is identified, at which time the FAA may consider further rulemaking.

Determination of Rule's Effective Date

Since a situation exists that requires the immediate adoption of this regulation, it is found that notice and opportunity for prior public comment hereon are impracticable, and that good cause exists for making this amendment effective in less than 30 days.

Comments Invited

Although this action is in the form of a final rule that involves requirements affecting flight safety and, thus, was not preceded by notice and an opportunity for public comment, comments are invited on this rule. Interested persons are invited to comment on this rule by submitting such written data, views, or arguments as they may desire. Communications shall identify the Rules Docket number and be submitted in triplicate to the address specified under the caption **ADDRESSES.** All communications received on or before the closing date for comments will be considered, and this rule may be amended in light of the comments received. Factual information that supports the commenter's ideas and suggestions is extremely helpful in evaluating the effectiveness of the AD action and determining whether additional rulemaking action would be needed.

Submit comments using the following format:

- Organize comments issue-by-issue. For example, discuss a request to change the compliance time and a request to change the service bulletin reference as two separate issues.
- For each issue, state what specific change to the AD is being requested.
- Include justification (e.g., reasons or data) for each request.

Comments are specifically invited on the overall regulatory, economic, environmental, and energy aspects of the rule that might suggest a need to modify the rule. All comments submitted will be available, both before and after the closing date for comments, in the Rules Docket for examination by interested persons. A report that summarizes each FAA-public contact concerned with the substance of this AD will be filed in the Rules Docket.

Commenters wishing the FAA to acknowledge receipt of their comments submitted in response to this rule must submit a self-addressed, stamped postcard on which the following statement is made: ''Comments to Docket Number 2001–NM–361–AD.'' The postcard will be date stamped and returned to the commenter.

Regulatory Impact

The regulations adopted herein will not have a substantial direct effect on the States, on the relationship between the national Government and the States, or on the distribution of power and responsibilities among the various levels of government. Therefore, it is determined that this final rule does not have federalism implications under Executive Order 13132.

The FAA has determined that this regulation is an emergency regulation that must be issued immediately to correct an unsafe condition in aircraft, and that it is not a ''significant regulatory action'' under Executive Order 12866. It has been determined further that this action involves an emergency regulation under DOT Regulatory Policies and Procedures (44 FR 11034, February 26, 1979). If it is determined that this emergency regulation otherwise would be significant under DOT Regulatory Policies and Procedures, a final regulatory evaluation will be prepared and placed in the Rules Docket. A copy of it, if filed, may be obtained from the Rules Docket at the location provided under the caption **ADDRESSES.**

List of Subjects in 14 CFR Part 39

Air transportation, Aircraft, Aviation safety, Incorporation by reference, Safety.

Adoption of the Amendment

Accordingly, pursuant to the authority delegated to me by the Administrator, the Federal Aviation Administration amends part 39 of the Federal Aviation Regulations (14 CFR part 39) as follows:

PART 39—AIRWORTHINESS DIRECTIVES

1. The authority citation for part 39 continues to read as follows:

Authority: 49 U.S.C. 106(g), 40113, 44701.

§ 39.13 [Amended]

2. Section 39.13 is amended by adding the following new airworthiness directive:

2001–26–07 Gulfstream Aerospace Corporation: Amendment 39–12571. Docket 2001–NM–361–AD.

Applicability: Model G–IV series airplanes, serial numbers 1253 through 1464 inclusive; certificated in any category.

Note 1: This AD applies to each airplane identified in the preceding applicability provision, regardless of whether it has been modified, altered, or repaired in the area subject to the requirements of this AD. For airplanes that have been modified, altered, or repaired so that the performance of the requirements of this AD is affected, the owner/operator must request approval for an alternative method of compliance in accordance with paragraph (e) of this AD. The request should include an assessment of the effect of the modification, alteration, or repair on the unsafe condition addressed by this AD; and, if the unsafe condition has not been eliminated, the request should include specific proposed actions to address it.

Compliance: Required as indicated, unless accomplished previously.

To prevent fire extinguishing agent from being discharged into the wrong location, which could result in failure to extinguish an in-flight fire on an affected engine and jeopardize operation of the opposite engine, accomplish the following:

Inspections

(a) Within the next 25 flight hours, but no later than 10 days after the effective date of this AD: Perform a general visual inspection of the electrical connections of the fire extinguisher bottles for correct connections, in accordance with Gulfstream GIV Alert Customer Bulletin No. 30, dated November 2, 2001.

Note 2: For the purposes of this AD, a general visual inspection is defined as: ''A visual examination of an interior or exterior area, installation, or assembly to detect obvious damage, failure, or irregularity. This level of inspection is made under normally available lighting conditions such as daylight, hangar lighting, flashlight, or drop-light, and may require removal or opening of access panels or doors. Stands, ladders, or platforms may be required to gain proximity to the area being checked.''

(b) Prior to further flight following any maintenance affecting the fire extinguisher bottles that is accomplished after performing the inspection required by paragraph (a) of this AD: Perform the inspection required by paragraph (a) of this AD, in accordance with Gulfstream GIV Alert Customer Bulletin No. 30, dated November 2, 2001.

Corrective Action

(c) If any incorrect electrical connection is detected during the inspection required by paragraph (a) or (b) of this AD, prior to further flight, correct that connection in accordance with the Accomplishment Instructions of Gulfstream GIV Alert Customer Bulletin No. 30, dated November 2, 2001.

Reporting

(d) Submit a report of inspection findings (both positive and negative) of the inspection required by paragraph (a) of this AD to the Manager, Atlanta Aircraft Certification Office (ACO), FAA, One Crown Center, 1895 Phoenix Boulevard, suite 450, Atlanta, Georgia 30349; fax (770) 703–6097; at the applicable time specified in paragraph (d)(1) or (d)(2) of this AD. The report must include the inspection results, a description of any discrepancies found, airplane serial number, and number of landings and flight hours on the airplane. Information collection requirements contained in this regulation have been approved by the Office of Management and Budget (OMB) under the provisions of the Paperwork Reduction Act of 1980 (44 U.S.C. 3501 *et seq.*) and have been assigned OMB Control Number 2120–0056.

(1) For airplanes on which the inspection required by paragraph (a) of this AD is accomplished after the effective date of this AD: Submit the report within 35 days after performing the inspection required by paragraph (a) of this AD.

(2) For airplanes on which the inspection required by paragraph (a) of this AD has been accomplished prior to the effective date of this AD: Submit the report within 35 days after the effective date of this AD.

Alternative Methods of Compliance

(e) An alternative method of compliance or adjustment of the compliance time that provides an acceptable level of safety may be used if approved by the Manager, Atlanta ACO. Operators shall submit their requests through an appropriate FAA Principal Maintenance Inspector, who may add comments and then send it to the Manager, Atlanta ACO.

Note 3: Information concerning the existence of approved alternative methods of compliance with this AD, if any, may be obtained from the Atlanta ACO.

Special Flight Permits

(f) Special flight permits may be issued in accordance with sections 21.197 and 21.199 of the Federal Aviation Regulations (14 CFR 21.197 and 21.199) to operate the airplane to a location where the requirements of this AD can be accomplished.

Incorporation by Reference

(g) The actions shall be done in accordance with Gulfstream GIV Alert Customer Bulletin No. 30, dated November 2, 2001. This incorporation by reference was approved by the Director of the Federal Register in accordance with 5 U.S.C. 552(a) and 1 CFR part 51. Copies may be obtained from Gulfstream Aerospace Corporation, P.O. Box 2206, M/S D–10, Savannah, Georgia 31402–9980. Copies may be inspected at the FAA, Transport Airplane Directorate, 1601 Lind Avenue, SW., Renton, Washington; or at the FAA, Atlanta Aircraft Certification Office, One Crown Center, 1895 Phoenix Boulevard, suite 450, Atlanta, Georgia; or at the Office of the Federal Register, 800 North Capitol Street, NW., suite 700, Washington, DC.

Effective Date

(h) This amendment becomes effective on January 11, 2002.

Issued in Renton, Washington, on December 14, 2001.

Kalene C. Yanamura,

Acting Manager, Transport Airplane Directorate, Aircraft Certification Service.

[FR Doc. 01–31430 Filed 12–26–01; 8:45 am]

BILLING CODE 4910–13–P

DEPARTMENT OF TRANSPORTATION

Federal Aviation Administration

14 CFR Part 39

[Docket No. 2001–NM–354–AD; Amendment 39–12574; AD 2001–26–10]

RIN 2120–AA64

Airworthiness Directives; Airbus Model A319, A320, and A321 Series Airplanes

AGENCY: Federal Aviation Administration, DOT.

ACTION: Final rule; request for comments.

SUMMARY: This amendment adopts a new airworthiness directive (AD) that is applicable to certain Airbus Model A319, A320, and A321 series airplanes. This action requires an in-situ one-time detailed visual inspection of Dräeger Type I oxygen containers, located in the passenger service units, and Dräeger Type II oxygen containers, located in the utility areas, for the presence of foam pads. This action also requires the installation of a new foam pad, if necessary; and other actions to ensure proper operations of the masks. This action is necessary to prevent failure of the oxygen containers to deliver oxygen to the passengers in the event of a rapid decompression or cabin depressurization. This action is intended to address the identified unsafe condition.

DATES: Effective January 11, 2002.

The incorporation by reference of certain publications listed in the regulations is approved by the Director of the Federal Register as of January 11, 2002.

Comments for inclusion in the Rules Docket must be received on or before January 28, 2002.

ADDRESSES: Submit comments in triplicate to the Federal Aviation Administration (FAA), Transport Airplane Directorate, ANM–114, Attention: Rules Docket No. 2001–NM–354–AD, 1601 Lind Avenue, SW., Renton, Washington 98055–4056. Comments may be inspected at this location between 9:00 a.m. and 3:00 p.m., Monday through Friday, except Federal holidays. Comments may be submitted via fax to (425) 227–1232. Comments may also be sent via the Internet using the following address: 9-anm-iarcomment@faa.gov. Comments sent via the Internet must contain ''Docket No. 2001-NM–354-AD'' in the subject line and need not be submitted in triplicate. Comments sent via fax or the Internet as attached electronic files must be formatted in Microsoft Word 97 for Windows or ASCII text.

The service information referenced in this AD may be obtained from Airbus Industrie, 1 Rond Point Maurice Bellonte, 31707 Blagnac Cedex, France. This information may be examined at the FAA, Transport Airplane Directorate, 1601 Lind Avenue, SW., Renton, Washington; or at the Office of the Federal Register, 800 North Capitol Street, NW., suite 700, Washington, DC.

FOR FURTHER INFORMATION CONTACT: Tim Dulin, Aerospace Engineer, International Branch, ANM–116, FAA, Transport Airplane Directorate, 1601 Lind Avenue, SW., Renton, Washington 98055–4056; telephone (425) 227–2141; fax (425) 227–1149.

SUPPLEMENTARY INFORMATION: The Direction Générale de l'Aviation Civile (DGAC), which is the airworthiness authority for France, recently notified the FAA that an unsafe condition may exist on certain Airbus Model A319, A320, and A321 series airplanes having manufacturer serial numbers 1035 through 1384 inclusive. The DGAC advises that an operator reported foam pads missing from some Dräeger Type I (three/four-mask) and Dräeger Type II (two-mask) oxygen containers. The foam pads, located at the end of the oxygen

generator, prevent the lanyard between the oxygen mask and oxygen release pin from getting twisted around the generator starter lever arm. In such a configuration, and in case of sudden release of cabin pressure, the oxygen supply to passengers may not be ensured. Findings indicate that the foam pads, erroneously thought to be packing material, were removed during installation of the oxygen containers on the airplane. The foam pads are necessary to prevent entanglement of the mask lanyards if the masks are required in an emergency.

Explanation of Relevant Service Information

Airbus has issued Service Bulletin A320–35–1022, dated June 27, 2001, which describes procedures for an inspection of Dräeger Type I oxygen containers, located in the power supply units, and Dräeger Type II oxygen containers, located in the utility areas, for the presence of foam pads; the installation of a new foam pad, if necessary; and other actions to ensure proper operation of the masks. Other actions include repacking the masks in the correct position; checking the masks, tubes, and lanyards for correct stowage; and doing a manual release test and an operational test. Accomplishment of the actions specified in the service bulletin is intended to adequately address the identified unsafe condition. The DGAC classified this service bulletin as mandatory and issued French airworthiness directive 2001–363(B), dated August 8, 2001, in order to assure the continued airworthiness of these airplanes in France.

FAA's Conclusions

These airplane models are manufactured in France and are type certificated for operation in the United States under the provisions of section 21.29 of the Federal Aviation Regulations (14 CFR 21.29) and the applicable bilateral airworthiness agreement. Pursuant to this bilateral airworthiness agreement, the DGAC has kept the FAA informed of the situation described above. The FAA has examined the findings of the DGAC, reviewed all available information, and determined that AD action is necessary for products of this type design that are certificated for operation in the United States.

Explanation of Requirements of Rule

Since an unsafe condition has been identified that is likely to exist or develop on other airplanes of the same type design registered in the United States, this AD is being issued to prevent failure of the oxygen containers to deliver oxygen to the passengers in the event of a rapid decompression or cabin depressurization. This AD requires an in-situ one-time detailed visual inspection of Dräeger Type I oxygen containers, located in the passenger service unit, and Dräeger Type II oxygen containers, located in the utility areas, for the presence of foam pads; installation of new foam pads, if necessary; and other actions to ensure proper operation of the masks. The actions are required to be accomplished in accordance with the service bulletin described previously.

Determination of Rule's Effective Date

Since a situation exists that requires the immediate adoption of this regulation, it is found that notice and opportunity for prior public comment hereon are impracticable, and that good cause exists for making this amendment effective in less than 30 days.

Comments Invited

Although this action is in the form of a final rule that involves requirements affecting flight safety and, thus, was not preceded by notice and an opportunity for public comment, comments are invited on this rule. Interested persons are invited to comment on this rule by submitting such written data, views, or arguments as they may desire. Communications shall identify the Rules Docket number and be submitted in triplicate to the address specified under the caption **ADDRESSES**. All communications received on or before the closing date for comments will be considered, and this rule may be amended in light of the comments received. Factual information that supports the commenter's ideas and suggestions is extremely helpful in evaluating the effectiveness of the AD action and determining whether additional rulemaking action would be needed.

Submit comments using the following format:

- Organize comments issue-by-issue. For example, discuss a request to change the compliance time and a request to change the service bulletin reference as two separate issues.
- For each issue, state what specific change to the AD is being requested.
- Include justification (e.g., reasons or data) for each request.

Comments are specifically invited on the overall regulatory, economic, environmental, and energy aspects of the rule that might suggest a need to modify the rule. All comments submitted will be available, both before and after the closing date for comments, in the Rules Docket for examination by interested persons. A report that summarizes each FAA-public contact concerned with the substance of this AD will be filed in the Rules Docket.

Commenters wishing the FAA to acknowledge receipt of their comments submitted in response to this rule must submit a self-addressed, stamped postcard on which the following statement is made: ''Comments to Docket Number 2001–NM–354–AD.'' The postcard will be date stamped and returned to the commenter.

Regulatory Impact

The regulations adopted herein will not have a substantial direct effect on the States, on the relationship between the national Government and the States, or on the distribution of power and responsibilities among the various levels of government. Therefore, it is determined that this final rule does not have federalism implications under Executive Order 13132.

The FAA has determined that this regulation is an emergency regulation that must be issued immediately to correct an unsafe condition in aircraft, and that it is not a ''significant regulatory action'' under Executive Order 12866. It has been determined further that this action involves an emergency regulation under DOT Regulatory Policies and Procedures (44 FR 11034, February 26, 1979). If it is determined that this emergency regulation otherwise would be significant under DOT Regulatory Policies and Procedures, a final regulatory evaluation will be prepared and placed in the Rules Docket. A copy of it, if filed, may be obtained from the Rules Docket at the location provided under the caption **ADDRESSES.**

List of Subjects in 14 CFR Part 39

Air transportation, Aircraft, Aviation safety, Incorporation by reference, Safety.

Adoption of the Amendment

Accordingly, pursuant to the authority delegated to me by the Administrator, the Federal Aviation Administration amends part 39 of the Federal Aviation Regulations (14 CFR part 39) as follows:

PART 39—AIRWORTHINESS DIRECTIVES

1. The authority citation for part 39 continues to read as follows:

Authority: 49 U.S.C. 106(g), 40113, 44701.

§ 39.13 [Amended]

2. Section 39.13 is amended by adding the following new airworthiness directive:

2001–26–10 Airbus Industrie: Amendment 39–12574. Docket 2001–NM–354–AD.

Applicability: Model A319, A320, and A321 series airplanes, certificated in any category, having manufacturer serial numbers 1035 and 1384 inclusive.

Note 1: This AD applies to each airplane identified in the preceding applicability provision, regardless of whether it has been modified, altered, or repaired in the area subject to the requirements of this AD. For airplanes that have been modified, altered, or repaired so that the performance of the requirements of this AD is affected, the owner/operator must request approval for an alternative method of compliance in accordance with paragraph (c) of this AD. The request should include an assessment of the effect of the modification, alteration, or repair on the unsafe condition addressed by this AD; and, if the unsafe condition has not been eliminated, the request should include specific proposed actions to address it.

Compliance: Required as indicated, unless accomplished previously.

To prevent failure of the oxygen containers to deliver oxygen to the passengers in the event of a rapid decompression or cabin depressurization; accomplish the following:

Inspection, Installation, and Other Actions

(a) Within 600 flight hours after the effective date of this AD, do an in-situ one-time detailed visual inspection of Dräeger Type I (three/four mask) oxygen containers, located in the passenger service units, and Drä eger Type II (two-mask) oxygen containers, located in the utility areas, for the presence of foam pads, per Airbus Service Bulletin A320–35–1022, dated June 27, 2001.

Note 2: For the purposes of this AD, a detailed visual inspection is defined as: ''An intensive visual examination of a specific structural area, system, installation, or assembly to detect damage, failure, or irregularity. Available lighting is normally supplemented with a direct source of good lighting at intensity deemed appropriate by the inspector. Inspection aids such as mirror, magnifying lenses, etc., may be used. Surface cleaning and elaborate access procedures may be required.''

(1) If all foam pads are installed, before further flight, complete the other actions (including repacking the masks in the correct position; checking the masks, tubes, and lanyards for correct stowage; and doing a manual release test and an operational test) specified in the Accomplishment Instructions of the service bulletin to ensure proper operation of the masks.

(2) If any foam pad is missing, before further flight, install a foam pad in the applicable oxygen container, and complete the other actions (including repacking the masks in the correct position; checking the masks, tubes, and lanyards for correct stowage; and doing a manual release test and an operational test) specified in the Accomplishment Instructions of the service bulletin to ensure proper operation of the masks.

Spares

(b) As of the effective date of this AD, no person shall install on any airplane a Dräeger Type I or Dräeger Type II oxygen container unless it has been inspected and other actions done per Airbus Service Bulletin A320–35–1022, dated June 27, 2001.

Alternative Methods of Compliance

(c) An alternative method of compliance or adjustment of the compliance time that provides an acceptable level of safety may be used if approved by the Manager, International Branch, ANM–116, Transport Airplane Directorate, FAA. Operators shall submit their requests through an appropriate FAA Principal Maintenance Inspector, who may add comments and then send it to the Manager, International Branch, ANM–116

Note 3: Information concerning the existence of approved alternative methods of compliance with this AD, if any, may be obtained from the International Branch, ANM–116.

Special Flight Permits

(d) Special flight permits may be issued in accordance with sections 21.197 and 21.199 of the Federal Aviation Regulations (14 CFR 21.197 and 21.199) to operate the airplane to a location where the requirements of this AD can be accomplished.

Incorporation by Reference

(e) The actions shall be done in accordance with Airbus Service Bulletin A320–35–1022, dated June 27, 2001. This incorporation by reference was approved by the Director of the Federal Register in accordance with 5 U.S.C. 552(a) and 1 CFR part 51. Copies may be obtained from Airbus Industrie 1 Rond Point, Maurice Bellonte, 31707 Blagnac Cedex, France. Copies may be inspected at the FAA, Transport Airplane Directorate, 1601 Lind Avenue, SW., Renton, Washington; or at the Office of the Federal Register, 800 North Capitol Street, NW., suite 700, Washington, DC.

Note 4: The subject of this AD is addressed in French airworthiness directive 2001–363(B), dated August 8, 2001.

Effective Date

(f) This amendment becomes effective on January 11, 2002

Issued in Renton, Washington, on December 17, 2001.

Kalene C. Yanamura,

Acting Manager, Transport Airplane Directorate, Aircraft Certification Service.

[FR Doc. 01–31549 Filed 12–26–01; 8:45 am]

BILLING CODE 4910–13–P

DEPARTMENT OF TRANSPORTATION

Federal Aviation Administration

14 CFR Part 71

[Airspace Docket No. 01–ACE–7]

Amendment to Class E Airspace; Ankeny, IA

AGENCY: Federal Aviation Administration, DOT.

ACTION: Direct final rule; confirmation of effective date.

SUMMARY: This document confirms the effective date of a direct final rule which revises Class E airspace at Ankeny, IA.

EFFECTIVE DATE: 0901 UTC, December 27, 2001.

FOR FURTHER INFORMATION CONTACT: Kathy Randolph, Air Traffic Division, Airspace Branch, ACE–52OC, DOT Regional Headquarters Building, Federal Aviation Administration, 901 Locust, Kansas City, MO 64106; telephone: (816) 329–2525.

SUPPLEMENTARY INFORMATION: The FAA published this direct final rule with a request for comments in **Federal Register** on September 24, 2001 (66 FR 48794). The FAA uses the direct final rulemaking procedure for a non-controversial rule where the FAA believes that there will be no adverse public comment. This direct final rule advised the public that no adverse comments were anticipated, and that unless a written adverse comment, or a written notice of intent to submit such an adverse comment, were received within the comment period, the regulation would become effective on December 27, 2001. Adverse comments were received, and thus this document confirms that this direct final rule will become effective on that date.

Issued in Kansas City, MO on December 18, 2001.

Herman J. Lyons, Jr.,

Manager, Air Traffic Division, Central Region.

[FR Doc. 01–31727 Filed 12–26–01; 8:45 am]

BILLING CODE 4910–13–M

DEPARTMENT OF HEALTH AND HUMAN SERVICES

Food and Drug Administration

21 CFR Chapter I

Change of Address; Technical Amendment

AGENCY: Food and Drug Administration, HHS.

ACTION: Final rule; technical amendment.

SUMMARY: The Food and Drug Administration (FDA) is amending its regulations to remove references to certain room numbers that no longer are valid because the address of the Center for Food Safety and Applied Nutrition (CFSAN) changed to 5100 Paint Branch Pkwy., College Park, MD, on December 14, 2001. FDA also is amending its regulations to remove a reference to an alternate site for submissions of documents to the Docket Management Branch. This alternate site is no longer available effective December 14, 2001. This action is editorial in nature and is intended to improve the accuracy and clarity of the agency's regulations.

EFFECTIVE DATE: December 14, 2001.

FOR FURTHER INFORMATION CONTACT: Louis B. Brock, Office of Regulations and Policy, Center for Food Safety and Applied Nutrition (HFS–24), 5100 Paint Branch Pkwy., College Park, MD, 20740–3835, 301–436–2378.

SUPPLEMENTARY INFORMATION: In the **Federal Register** of November 6, 2001 (66 FR 56034), FDA amended its regulations to reflect that on December 14, 2001, CFSAN's address was changed to 5100 Paint Branch Pkwy., College Park, MD 20740. This change of address will make room numbers cited in certain regulations invalid. Therefore, FDA is amending its regulations in 21 CFR parts 73, 101, 172, 173, 177, 178, and 184 to remove the phrase ''rm. 3321'' wherever it appears. FDA also is amending 21 CFR 10.20(f) to add a period after ''20857'' and to remove the following phrase: '', except that a submission which is required to be received by the Branch by a specified date may be delivered in person to the FDA building in Washington (Room 6819, 200 C Street, SW., Washington, DC 20204) and will be considered as received by the Branch on the date on which it is delivered.'' This alternate site, originally provided for the convenience of the public, is no longer available because CFSAN's address has changed to College Park.

Publication of this document constitutes final action on these changes under the Administrative Procedure Act (5 U.S.C. 553). Notice and public procedure are unnecessary because FDA is merely correcting nonsubstantive errors.

Therefore, under the Federal Food, Drug, and Cosmetic Act and under authority delegated to the Commissioner of Food and Drugs, 21 CFR chapter I is amended as follows:

1. Section 10.20(f) is amended by adding a period after ''20857'' and by removing the rest of the sentence.

2. Parts 73, 101, 172, 173, 177, 178, and 184 are amended by removing the words ''rm. 3321'' wherever they appear.

Dated: December 19, 2001.

Margaret M. Dotzel,

Associate Commissioner for Policy.

[FR Doc. 01–31714 Filed 12–26–01; 8:45 am]

BILLING CODE 4160–01–S

DEPARTMENT OF HEALTH AND HUMAN SERVICES

Food and Drug Administration

21 CFR Part 510

New Animal Drugs; Change of Sponsor's Address

AGENCY: Food and Drug Administration, HHS.

ACTION: Final rule.

SUMMARY: The Food and Drug Administration (FDA) is amending the animal drug regulations to reflect a change of sponsor's address for Phibro Animal Health.

DATES: This rule is effective December 27, 2001.

FOR FURTHER INFORMATION CONTACT: Lonnie W. Luther, Center for Veterinary Medicine (HFV–102), Food and Drug Administration, 7500 Standish Pl., Rockville, MD 20855, 301–827–0209.

SUPPLEMENTARY INFORMATION: Phibro Animal Health, One Parker Plaza, Fort Lee, NJ 07024, has informed FDA of a change of sponsor's address to 710 Rt. 46 East, suite 401, Fairfield, NJ 07004. Accordingly, the agency is amending the regulations in 21 CFR 510.600(c)(1) and (c)(2) to reflect the change.

This rule does not meet the definition of ''rule'' in 5 U.S.C. 804(3)(A) because it is a rule of ''particular applicability.'' Therefore, it is not subject to the congressional review requirements in 5 U.S.C. 801–808.

List of Subjects in 21 CFR Part 510

Administrative practice and procedure, Animal drugs, Labeling, Reporting and recordkeeping requirements.

Therefore, under the Federal Food, Drug, and Cosmetic Act and under authority delegated to the Commissioner of Food and Drugs and redelegated to the Center for Veterinary Medicine, 21 CFR part 510 is amended as follows:

PART 510—NEW ANIMAL DRUGS

1. The authority citation for 21 CFR part 510 continues to read as follows:

Authority: 21 U.S.C. 321, 331, 351, 352, 353, 360b, 371, 379e.

2. Section 510.600 is amended in the table in paragraph (c)(1) by revising the entry for ''Phibro Animal Health'' and in the table in paragraph (c)(2) by revising the entry for ''066104'' to read as follows:

§ 510.600 Names, addresses, and drug labeler codes of sponsors of approved applications.

* * * * *

(c) * * *

(1) * * *

Firm name and address	Drug labeler code
* * * * * * *	
Phibro Animal Health, 710 Rt. 46 East, suite 401, Fairfield, NJ 07004 ..	066104
* * * * * * *	

(2) * * *

Drug labeler code	Firm name and address
* * * * * * *	
066104	Phibro Animal Health, 710 Rt. 46 East, suite 401, Fairfield, NJ 07004

Drug labeler code				Firm name and address		
*	*	*	*	*	*	*

Dated: November 30, 2001.

Claire M. Lathers,

Director, Office of New Animal Drug Evaluation, Center for Veterinary Medicine.

[FR Doc. 01–31715 Filed 12–26–01; 8:45 am]

BILLING CODE 4160–01–S

DEPARTMENT OF THE INTERIOR

Office of Surface Mining Reclamation and Enforcement

30 CFR Part 915

[IA–012–FOR]

Iowa Regulatory Program

AGENCY: Office of Surface Mining Reclamation and Enforcement, Interior.

ACTION: Final rule; approval of amendment.

SUMMARY: We, the Office of Surface Mining Reclamation and Enforcement (OSM), are approving an amendment to the Iowa regulatory program (Iowa program) under the Surface Mining Control and Reclamation Act of 1977 (SMCRA or the Act). The Iowa Department of Agriculture and Land Stewardship, Division of Soil Conservation, Mines and Minerals Bureau (Division or Iowa) proposed revisions to its April 1999 revegetation success guidelines concerning normal husbandry practices; minimum planting arrangements and tree and shrub stocking requirements for recreational, wildlife, and forested lands; and criteria for dry weight determinations for corn, soybean, oat, and wheat crops. Iowa intends to revise its program to be consistent with the corresponding Federal regulations.

EFFECTIVE DATE: December 27, 2001.

FOR FURTHER INFORMATION CONTACT: John W. Coleman, Office of Surface Mining, Mid-Continent Regional Coordinating Center, Alton Federal Building, 501 Belle Street, Alton, Illinois 62002. Telephone: (618) 463–6460.

SUPPLEMENTARY INFORMATION:

I. Background on the Iowa Program
II. Submission of the Amendment
III. OSM's Findings
IV. Summary and Disposition of Comments
V. OSM's Decision
VI. Procedural Determinations

I. Background on the Iowa Program

Section 503(a) of the Act permits a State to assume primacy for the regulation of surface coal mining and reclamation operations on non-Federal and non-Indian lands within its borders by demonstrating that its program includes, among other things, '' * * * a State law which provides for the regulation of surface coal mining and reclamation operations in accordance with the requirements of this Act * * *; and rules and regulations consistent with regulations issued by the Secretary pursuant to this Act.'' *See* 30 U.S.C. 1253(a)(1) and (7). On the basis of these criteria, the Secretary of the Interior conditionally approved the Iowa program on January 21, 1981. You can find background information on the Iowa program, including the Secretary's findings, the disposition of comments, and the conditions of approval in the January 21, 1981, **Federal Register** (46 FR 5885). You can find later actions on the Iowa program at 30 CFR 915.10, 915.15, and 915.16.

II. Submission of the Amendment

By letter dated August 17, 2001 (Administrative Record No. IA–446), Iowa sent us an amendment to its program under SMCRA and the Federal regulations at 30 CFR 732.17(b). Iowa sent the amendment in response to required program amendments at 30 CFR 915.16(b), (d), and (e). Iowa proposed changes to its April 1999 revegetation success guidelines entitled ''Revegetation Success Standards and Statistically Valid Sampling Techniques.''

We announced receipt of the amendment in the September 24, 2001, **Federal Register** (66 FR 48841). In the same document, we opened the public comment period and provided an opportunity for a public hearing or meeting on the adequacy of the amendment. The public comment period closed on October 24, 2001. We did not receive any comments. Because no one requested a public hearing or meeting, we did not hold one.

During our review of the amendment, we identified concerns about a typographical error in a provision for interseeding at Section III.H.4.(c)(ii); the interpretation of the revegetation success standards for recreational, wildlife, and forested lands at Section IV.E; and the interpretation of the dry weight determination for grain samples at Section V.A.2(l). We notified Iowa of the error at Section III.H.4.(c)(ii) and explained our interpretation of its provisions at Sections IV.E and V.A.2(l) in a letter dated September 12, 2001 (Administrative Record No. IA–446.3A).

By letter dated September 28, 2001 (Administrative Record No. IA–446.5), Iowa agreed to correct the typographical error and concurred with our interpretation of its provisions at Sections IV.E and V.A.2(l).

III. OSM's Findings

This section contains our findings concerning the amendment to the Iowa program. We are making these findings in accordance with the criteria and procedural requirements of the Federal regulations at 30 CFR 732.15 and 732.17. Any revisions that we do not discuss below are minor wording changes or revised cross-references and paragraph notations to reflect organizational changes resulting from this amendment.

A. Normal Husbandry Practices

Section III, Part H of Iowa's April 1999 revegetation success guidelines describes normal husbandry practices that a permittee can use in the repair of rills and gullies without restarting the responsibility period for successful revegetation and bond liability. A permittee may address rill and gully erosion within the permit or partial permit area without restarting the responsibility period only if repairs are completed using the normal husbandry practice guidelines provided in this section. If the repair work requires augmented seeding, fertilization, or irrigation, the period of responsibility will restart. Normal husbandry practices do not include any temporary erosion control structures, such as silt fencing, straw, or hay bale dikes. This section includes requirements for terrace repair and maintenance; riprap repair and maintenance; land smoothing and reseeding; and liming, fertilizing, and interseeding.

The Federal regulations at 30 CFR 816.116(c)(4) for surface mining operations and 30 CFR 817.116(c)(4) for underground mining operations allow the regulatory authority, under specified conditions, to approve selective husbandry practices (excluding augmented seeding, fertilization, or irrigation) without extending the period of responsibility for revegetation success and bond liability. The regulatory authority must obtain prior approval from OSM in accordance with 30 CFR 732.17 that the practices are normal

husbandry practices that can either be expected to continue as part of the postmining land use or will not reduce the probability of permanent revegetation success if the practices are discontinued after the responsibility period expires. Approved practices must be normal husbandry practices within the region for unmined lands having land uses similar to the approved postmining land use of the disturbed area. In the September 7, 1988, preamble for the Federal regulations at 30 CFR 816.116(c)(4) and 817.116(c)(4), we discussed the type of documentation that the regulatory authority must submit to support its proposed normal husbandry practices (53 FR 34641). The regulatory authority must submit documentation that demonstrates that the practice is the usual or expected state, form, amount, or degree of management performed habitually or customarily to prevent exploitation, destruction, or neglect of the resource and to maintain a prescribed level of use or productivity on similar unmined lands. The documentation may include either conservation practice guidelines or agronomy guidelines and fact sheets for the management of unmined lands in the applicable State. The guidelines and fact sheets could be those distributed by the Natural Resources Conservation Service (NRCS) or other organizations with similar expertise in management of a State's natural resources, including agricultural lands.

In our final rule dated November 26, 1999, we did not approve Section III, Part H because Iowa did not submit documentation that demonstrated that the proposed normal husbandry practices were the usual or expected state, form, amount, or degree of management performed habitually or customarily to prevent exploitation, destruction, or neglect of the resources on similar unmined lands in the State (64 FR 66385). We required Iowa to either remove its guidelines for normal husbandry practices at Section III, Part H or submit documentation that supports the proposed normal husbandry practices. We codified this requirement at 30 CFR 915.16(b).

In response to the required program amendment at 30 CFR 915.16(b), Iowa made changes to Section III, Part H and submitted documentation for support of the proposed normal husbandry practices. The documentation included copies of five publications: (1) NRCS Conservation Practice Standard 600, Terrace; (2) NRCS Conservation Practice Standard 468, Lined Waterway or Outlet; (3) NRCS Conservation Practice Standard 466, Land Smoothing; (4) NRCS Conservation Practice Standard 590, Nutrient Management; and (5) Iowa State University Extension Service Publication Pm-1097, Interseeding and No-till Pasture Renovation. Based on the findings below, we are approving Iowa's normal husbandry practice guidelines at Section III, Part H and removing the required program amendment at 30 CFR 915.16(b).

1. Part H.1 provides that terrace repair and maintenance required because of specified occurrences will be considered normal husbandry practices and will not require restarting the responsibility period. First, the permittee may repair terraces damaged because of rainfall events that exceed their designed capacities. Second, the permittee may clean out and reestablish terrace flow lines during the first year or two after the initial terrace construction and seeding when sediment deposition into a terrace flow line exceeds the designed sediment storage capacity. Third, the permittee may clean out and reestablish terrace flow lines and repair or replace tile lines that have been plugged or crushed due to differential settling. Part H.1 includes a listing of the types of terrace repair and maintenance options that the State will consider as normal husbandry practices. Iowa submitted NRCS Conservation Practice Standard 600 (Terrace) to support these practices.

Based on the supporting documentation provided by Iowa, we find that the proposed guidelines for terrace repair and maintenance at Part H.1 meet the requirements of the Federal regulations at 30 CFR 816.116(c)(4) and 817.116(c)(4) for normal husbandry practices.

2. Part H.2 provides guidelines for riprap repair and maintenance on ditches and structures due to storm events that exceed the maximum design standard. Part H.2 includes a listing of the types of riprap repair and maintenance practices that Iowa will consider for normal husbandry practices. Iowa submitted NRCS Conservation Practice Standard 468 (Lined Waterway or Outlet) to support these practices.

Based on the supporting documentation provided by Iowa, we find that the proposed guidelines for riprap repair and maintenance on ditches and structures at Part H.2 meet the requirements of the Federal regulations at 30 CFR 816.116(c)(4) and 817.116(c)(4) for normal husbandry practices.

3. Part H.3 provides that normal husbandry practices can include limited land smoothing and reseeding as long as the individual areas are no larger than one acre in size and the cumulative acreage is no greater than 10 percent of the entire permit area. Iowa submitted NRCS Conservation Practice Standard 466 (Land Smoothing) to support these practices.

Based on the supporting documentation and the acreage limitations provided by Iowa, we find that Iowa's proposed guidelines for land smoothing and reseeding at Part H.3 meet the requirements of the Federal regulations at 30 CFR 816.116(c)(4) and 817.116(c)(4) for normal husbandry practices.

4. Part H.4 provides normal husbandry practices for applications of lime and fertilizer at paragraphs (a) and (b). It also provides normal husbandry practices for interseeding at paragraph (c).

Part H.4(a) and (b) provide, respectively, that lime and fertilizer applications may be made based on soil test recommendations for the appropriate crop or vegetation. Before any lime and fertilizer applications, the permittee must submit to the Division the original copies of the soil test recommendations and a map of the permit areas indicating where each soil sample was taken. Iowa requires the permittee to follow the lime and fertilizer maintenance application guidelines of NRCS Conservation Practice Standard 590 (Nutrient Management). For lime and fertilizer applications, the permittee must submit the original weight tickets for the applications to the Division at the times specified in section III, part B.3. If subsequent submittals of lime and fertilizer weight tickets prove that actual applications were in excess of the soil test recommendations, Iowa will restart the responsibility period. Iowa submitted NRCS Conservation Practice Standard 590 (Nutrient Management) to support its normal husbandry practice guidelines for liming and fertilizing.

Part H.4(c) requires the Division to approve any species to be interseeded before the seed is planted. The permittee must submit the original seed tickets to the Division at the times specified in Section III, Part B.3. Iowa will restart the responsibility period if any interseeding completed on the permit area fails to meet any of the criteria listed below.

(i) Interseeding of a legume on the third year of a grass/legume vegetative cover.

(ii) Interseeding of a single species in the permit approved seeding mixture, or interseeding of a replacement species, that has been approved by the Division, to improve the vegetative cover when unfavorable weather conditions adversely

affect the germination success of the original revegetation effort.

(iii) Interseeding of a species due to excessive winter kill.

Iowa submitted Iowa State University Extension Service Publication Pm–1097 (Interseeding and No-till Pasture Renovation) to support its normal husbandry practice guidelines for interseeding.

Based on the documentation submitted by Iowa, we find that the proposed guidelines for liming, fertilizing, and interseeding at Part H.4 meet the requirements of the Federal regulations at 30 CFR 816.116(c)(4) and 817.116(c)(4) for normal husbandry practices.

B. Recreational, Wildlife, and Forested Lands

Section IV, Part E of Iowa's April 1999 revegetation success guidelines contains the revegetation success standards for recreational areas, wildlife areas, and forested lands. In our final rule dated November 26, 1999, we approved section IV, part E with two exceptions (64 FR 66388). First, Iowa's guidelines did not contain any planting arrangement provisions for these land uses as required by 30 CFR 816.116(b)(3)(i) and 817.116(b)(3)(i). Second, Iowa did not submit any documentation to prove that the State agencies responsible for the administration of forestry and wildlife programs approved its minimum stocking provisions as required by 30 CFR 816.116(b)(3)(i) and 817.116(b)(3)(i). We required Iowa to either add planting arrangement provisions for recreational, wildlife, and forested land to its guidelines and obtain program-wide concurrence from the State agencies responsible for the administration of forestry and wildlife programs or add a provision to its guidelines that requires permit-specific concurrence for planting arrangements from the State agencies responsible for the administration of forestry and wildlife programs. We also required Iowa to either obtain program-wide concurrence for its minimum stocking provisions or add a provision to its guidelines that requires permit-specific concurrence for minimum stocking from the State agencies responsible for the administration of forestry and wildlife programs. We codified these requirements at 30 CFR 915.16(d)(1) and (2).

Iowa made the following changes to section IV, part E to address these requirements.

1. Iowa added the following new provision to the beginning of the second paragraph of section IV, part E:

The wildlife and recreational lands have site specific vegetation. Each permit with these types of post-mining land use have been approved by the Division in concurrence with the Iowa Department of Natural Resources.

We are interpreting the language of this provision to mean that Iowa requires permit specific concurrence from the Iowa Department of Natural Resources for both planting arrangements and stocking rates for recreational, wildlife, and forested land uses. In its letter dated September 28, 2001, Iowa agreed with our interpretation (Administrative Record No. IA–446.5). Based on this interpretation, we find that section IV, part E is no less effective than the Federal regulations at 30 CFR 816.116(b)(3)(i) and 817.116(b)(3)(i). We are also removing the required program amendments at 30 CFR 915.16(d)(1) and (2).

2. Iowa added the following new provision for tree and shrub stocking requirements at Section IV, Part E, Step 2:

The tree and shrub planting shall be spaced such that there are a minimum of five hundred (500) seedlings per acre. Acceptable tree and shrub spacing, which will meet or exceed the minimum number of seedlings per acre, are listed below. Narrower spacing is used for timber production. Wider spacing and planting in groups or clumps is used for wildlife and recreational tree and shrub plantings. These group or clump plantings should consist of a minimum of five (5) or more trees, and fifteen (15) or more shrubs per group.

TREE AND SHRUB SPACING FOR PLANTING

Spacing in feet	Number of seedlings per acre
5 x 5	1,742
5 x 10	871
6 x 6	1,210
6 x 10	726
7 x 7	889
7 x 10	622
8 x 8	681
8 × 10	545

We find that this provision provides additional guidance to permittees for addressing planting arrangements and stocking rates for recreational, wildlife, and forested land uses in their permits. As discussed above, Iowa requires permit specific concurrence from the Iowa Department of Natural Resources for both planting arrangements and stocking rates for these land uses. Therefore, we find that Section IV.E.2 is no less effective than the Federal regulations at 30 CFR 816.116(b)(3)(i) and 817.116(b)(3)(i).

C. Corn, Soybean, Oat, and Wheat Crops

Section V of Iowa's April 1999 revegetation success guidelines contains sampling procedures and techniques to determine productivity for corn, soybeans, oats, wheat, and forage crops; to determine ground cover percentage; and to determine if trees and shrubs meet minimum density standards. In our final rule dated November 26, 1999, we approved Section V of Iowa's April 1999 revegetation success guidelines with one exception (64 FR 66388). We did not fully approve Section V, Part A, Step 2, which contains the grain sampling techniques for test plot harvesting, because it did not specify how the permittee is to obtain the dry weight of the test plot grain samples. The dry weight is used in a calculation to determine the moisture percentage for each test plot sample. We required Iowa to revise its April 1999 revegetation success guidelines at Section V, Part A, Step 2 by adding a provision that specifies the standard method that permittees are to use for obtaining the dry weight of test plot grain samples. We codified this requirement at 30 CFR 915.16(e).

In response to the required amendment at 30 CFR 915.16(e), Iowa added the following new provision to the beginning of Step 2(l):

(l) The grain samples collected and labeled in Step 2.g. above must be oven dried until a constant dry weight is obtained. Weighing will be performed immediately after oven drying to avoid absorption of water from humid air. This dry weight will equal zero percent (0%) moisture. All samples will be adjusted to the appropriate percent moisture for that grain.

We interpret the first sentence of Iowa's new provision to mean that the permittees must use the standard air-oven method to obtain dry weights. The air-oven method is recognized by the United States Department of Agriculture as a means of determining the moisture content of grain. In its letter dated September 28, 2001, Iowa agreed with our interpretation (Administrative Record No. IA–446.5). Based on Iowa's concurrence with our interpretation, we are approving Section V, Part A, Step 2(l) and removing the required amendment at 30 CFR 915.16(e).

IV. Summary and Disposition of Comments

Federal Agency Comments

On August 30, 2001, under section 503(b) of SMCRA and 30 CFR 732.17(h)(11)(i) of the Federal

regulations, we requested comments on the amendment from various Federal agencies with an actual or potential interest in the Iowa program (Administrative Record No. IA–446.1A). We did not receive any comments.

Environmental Protection Agency (EPA)

Under 30 CFR 732.17(h)(11)(ii), we are required to obtain the written concurrence of the EPA for those provisions of the program amendment that relate to air or water quality standards issued under the authority of the Clean Water Act (33 U.S.C. 1251 *et seq.*) or the Clean Air Act (42 U.S.C. 7401 *et seq.*). None of the revisions that Iowa proposed to make in this amendment pertain to air or water quality standards. Therefore, we did not ask the EPA for its concurrence.

Under 30 CFR 732.17(h)(11)(i), we requested comments on the amendment from the EPA (Administrative Record No. IA–446.1A). The EPA did not respond to our request.

State Historical Preservation Officer (SHPO) and the Advisory Council on Historic Preservation (ACHP)

Under 30 CFR 732.17(h)(4), we are required to request comments from the SHPO and ACHP on amendments that may have an effect on historic properties. On August 31, 2001, we requested comments on Iowa's amendment (Administrative Record No. IA–446.2A), but we received no response to our request.

Public Comments

We requested public comments on the proposed amendment, but we did not receive any.

V. OSM's Decision

Based on the above findings, we approve the amendment as sent to us by Iowa on August 17, 2001.

To implement this decision, we are amending the Federal regulations at 30 CFR Part 915, which codify decisions concerning the Iowa program. We find that good cause exists under 5 U.S.C. 553(d)(3) to make this final rule effective immediately. Section 503(a) of SMCRA requires that the State's program demonstrate that the State has the capability of carrying out the provisions of the Act and meeting its purposes. Making this rule effective immediately will expedite that process.

VI. Procedural Determinations

Executive Order 12866—Regulatory Planning and Review

This rule is exempt from review by the Office of Management and Budget under Executive Order 12866.

Executive Order 12630—Takings

This rule does not have takings implications. This determination is based on the analysis performed for the counterpart Federal regulations.

Executive Order 13132—Federalism

This rule does not have federalism implications. SMCRA delineates the roles of the Federal and State governments with regard to the regulation of surface coal mining and reclamation operations. One of the purposes of SMCRA is to ''establish a nationwide program to protect society and the environment from the adverse effects of surface coal mining operations.'' Section 503(a)(1) of SMCRA requires that State laws regulating surface coal mining and reclamation operations be ''in accordance with'' the requirements of SMCRA, and section 503(a)(7) requires that State programs contain rules and regulations ''consistent with'' regulations issued by the Secretary under SMCRA.

Executive Order 12988—Civil Justice Reform

The Department of the Interior has conducted the reviews required by section 3 of Executive Order 12988 and has determined that, to the extent allowed by law, this rule meets the applicable standards of subsections (a) and (b) of that section. However, these standards are not applicable to the actual language of State regulatory programs and program amendments because each program is drafted and promulgated by a specific State, not by OSM. Under sections 503 and 505 of SMCRA (30 U.S.C. 1253 and 1255) and 30 CFR 730.11, 732.15, and 732.17(h)(10), decisions on proposed State regulatory programs and program amendments submitted by the States must be based solely on a determination of whether the submittal is consistent with SMCRA and its implementing Federal regulations and whether the other requirements of 30 CFR Parts 730, 731, and 732 have been met.

Executive Order 13211—Regulations That Significantly Affect the Supply, Distribution, or Use of Energy

On May 18, 2001, the President issued Executive Order 13211 which requires agencies to prepare a Statement of Energy Effects for a rule that is (1) considered significant under Executive Order 12866 and (2) likely to have a significant adverse effect on the supply, distribution, or use of energy. Because this rule is exempt from review under Executive Order 12866 and is not expected to have a significant adverse effect on the supply, distribution, or use of energy, a Statement of Energy Effects is not required.

National Environmental Policy Act

Section 702(d) of SMCRA (30 U.S.C. 1292(d)) provides that a decision on a proposed State regulatory program provision does not constitute a major Federal action within the meaning of section 102(2)(C) of the National Environmental Policy Act (NEPA) (42 U.S.C. 4332(2)(C)). A determination has been made that such decisions are categorically excluded from the NEPA process (516 DM 8.4.A).

Paperwork Reduction Act

This rule does not contain information collection requirements that require approval by the Office of Management and Budget under the Paperwork Reduction Act (44 U.S.C. 3507 *et seq.*).

Regulatory Flexibility Act

The Department of the Interior has determined that this rule will not have a significant economic impact on a substantial number of small entities under the Regulatory Flexibility Act (5 U.S.C. 601 *et seq.*). The State submittal which is the subject of this rule is based upon counterpart Federal regulations for which an economic analysis was prepared and certification made that such regulations would not have a significant economic effect upon a substantial number of small entities. Accordingly, this rule will ensure that existing requirements previously promulgated by OSM will be implemented by the State. In making the determination as to whether this rule would have a significant economic impact, the Department relied upon the data and assumptions for the counterpart Federal regulations.

Small Business Regulatory Enforcement Fairness Act

This rule is not a major rule under 5 U.S.C. 804(2), the Small Business Regulatory Enforcement Fairness Act. This rule:

a. Does not have an annual effect on the economy of $100 million.

b. Will not cause a major increase in costs or prices for consumers, individual industries, federal, state, or local government agencies, or geographic regions.

c. Does not have significant adverse effects on competition, employment, investment, productivity, innovation, or the ability of U.S.-based enterprises to compete with foreign-based enterprises.

This determination is based upon the fact that the State submittal which is the

subject of this rule is based upon counterpart Federal regulations for which an analysis was prepared and a determination made that the Federal regulation was not considered a major rule.

Unfunded Mandates

This rule will not impose a cost of $100 million or more in any given year on any governmental entity or the private sector.

List of Subjects in 30 CFR Part 915

Intergovernmental relations, Surface mining, Underground mining.

Dated: December 4, 2001.

Richard J. Seibel,

Regional Director, Mid-Continent Regional Coordinating Center.

For the reasons set out in the preamble, 30 CFR Part 915 is amended as set forth below:

PART 915—IOWA

1. The authority citation for Part 915 continues to read as follows:

Authority: 30 U.S.C. 1201 *et seq.*

2. Section 915.15 is amended in the table by adding a new entry in chronological order by ''Date of final publication'' to read as follows:

§ 915.15 Approval of Iowa regulatory program amendments.

* * * * *

Original amendment submission date	Date of final publication	Citation/description
*	*	*
August 17, 2001	December 27, 2001	Sections III.H, IV.E, and V.A.2(l) of Iowa's April 1999 Revegetation Success Standards and Statistically Valid Sampling Techniques.

3. Section 915.16 is amended by removing and reserving paragraphs (b), (d), and (e).

[FR Doc. 01–31683 Filed 12–26–01; 8:45 am]

BILLING CODE 4310–05–P

DEPARTMENT OF TRANSPORTATION

Coast Guard

33 CFR Parts 110 and 165

[CGD09–01–153]

RIN 2115–AA97 and 2115–AA98

Safety Zone and Anchorage Regulations; Chicago Harbor, Chicago, Illinois

AGENCY: Coast Guard, DOT.

ACTION: Temporary final rule.

SUMMARY: The Coast Guard is establishing a temporary safety zone and suspending a portion of an anchorage area encompassed by the safety zone for the City of Chicago's New Year Celebration. This rulemaking is necessary for the protection and safety of passengers and vessels during the fireworks display. This rulemaking is intended to restrict vessel traffic from a portion of Lake Michigan in the area of the Chicago Harbor, in particular, the Monroe Street Harbor. During this event, vessels will be unable to enter or exit the Monroe Harbor.

DATES: This temporary final rule is effective from 11 p.m. (local) December 31, 2001 until 12:45 a.m. (local) January 1, 2002.

ADDRESSES: Comments and material received from the public, as well as documents indicated in this preamble as being available in the docket, are part of docket [CGD09–01–153] and are available for inspection or copying at: U.S. Coast Guard Marine Safety Office Chicago, 215 W. 83rd Street, Suite D, Burr Ridge, Illinois 60521, between 7:30 a.m. and 4 p.m. Monday through Friday, except Federal Holidays.

FOR FURTHER INFORMATION CONTACT: MST3 Mike E. Esquivel, U.S. Coast Guard Marine Safety Office Chicago, 215 W. 83rd Street, Burr Ridge, Illinois 60521. The telephone number is (630) 986–2155.

SUPPLEMENTARY INFORMATION:

Regulatory History

We did not publish a notice of proposed rulemaking (NPRM) for this regulation. Under 5 U.S.C. 553(b)(B), the Coast Guard finds that good cause exists for not publishing an NPRM. Under 5 U.S.C. 553(d)(3), the Coast Guard finds that good cause exists for making this rule effective less than 30 days after publication in the **Federal Register**. The permit application was not received in time to publish an NPRM followed by a final rule before the effective date. Delaying this rule would be contrary to the public interest of ensuring the safety of spectators and vessels during this event and immediate action is necessary to prevent possible loss of life or property. The Coast Guard has not received any complaints or negative comments previously with regard to this event.

Background and Purpose

A temporary safety zone is necessary to ensure the safety of vessels and spectators from the hazards associated with fireworks displays. Based on recent accidents that have occurred in other Captain of the Port zones, and the explosive hazard of fireworks, the Captain of the Port Chicago has determined firework launches in close proximity to watercraft pose significant risks to public safety and property. The likely combination of large numbers of recreational vessels, congested waterways, darkness punctuated by bright flashes of light, alcohol use, and debris falling in the water could easily result in serious injuries or fatalities. Establishing a safety zone to control vessel movement around the location of the launch platforms will help ensure the safety of person and property at this event and help minimize the associated risk.

The safety zone encompasses the waters of the Chicago Harbor bounded by the following positions: 41° 52.43 N, 087° 36.43 W, thence east to 41° 52.43 N, 087° 36.16 W, thence south to 41° 52.28 N, 087° 36.16 W, thence west to 41° 52.28 N, 087° 36.43 W, thence north back to the point of origin. These coordinates are based upon North American Datum 1983 (NAD 83). This area includes a portion of the Monroe Street Harbor including the Grant Park anchorage areas (33 CFR 110.83), the entrance to the Monroe Street Harbor, as well as a portion outside the breakwall for the Monroe Street Harbor. Only that portion of the anchorage area encompasses by the safety zone will be suspended.

All persons and vessels shall comply with the instructions of the Coast Guard Captain of the Port or the designated on scene patrol personnel. Entry into, transiting, or anchoring within the safety zone is prohibited unless authorized by the Captain of the Port Chicago or his designated on scene representative. The Captain of the Port or his designated on scene

representative may be contacted via VHF Channel 16.

Regulatory Evaluation

This temporary rule is not a significant regulatory action under section 3(f) of Executive Order 12866 and does not require an assessment of potential costs and benefits under section 6(a)(3) of that order. It has not been reviewed by the Office of Management and Budget under that order. It is not significant under the regulatory policies and procedures of the Department of Transportation (DOT) (44 FR 11040; February 26, 1979). The Coast Guard expects the economic impact of this proposal to be so minimal that a full Regulatory Evaluation under paragraph 10(e) of the regulatory policies and procedures of DOT is unnecessary.

This determination is based on the minimal time that vessels will be restricted from the zone, and the zone is in an area where the Coast Guard expects insignificant adverse impact to mariners from the zones' activation.

Small Entities

Under the Regulatory Flexibility Act (5 U.S.C. 601 *et seq.*) the Coast Guard considered whether this rule will have a significant impact on a substantial number of small businesses and not-for-profit organizations that are not dominant in their respective fields, and government jurisdictions with populations less than 50,000. For the same reasons set fourth in the above regulatory evaluations, the Coast Guard certifies under section 605 (b) of the Regulatory Flexibility Act (5 U.S.C.601 *et seq.*) that this temporary final rule will not have a significant economic impact on a substantial number of small entities.

This safety zone will not have a significant economic impact on a substantial number of small entities for the following reasons. At this time of year there the amount of vessel traffic is at a minimum level and the safety zone will only be in place for a very short duration. In addition, those vessels requiring transit of the area may request permission from the Captain of the Port Chicago to transit the zone.

Assistance for Small Entities

In accordance with section 213(a) of the Small Business Regulatory Enforcement Fairness Act of 1996 (Public Law 104–121), the Coast Guard wants to assist small entities in understanding this rule so that they can better evaluate its effectiveness and participate in the rulemaking process. If your small business or organization is affected by this rule, and you have questions concerning its provisions or options for compliance, please contact the office listed in **ADDRESSES** in this preamble.

Small businesses may send comments on the actions of Federal employees who enforce, or otherwise determine compliance with, Federal regulations to the Small Business and Agriculture Regulatory Enforcement Ombudsman and the Regional Small Business Regulatory Fairness Boards. The Ombudsman evaluates these actions annually and rates each agency's responsiveness to small business. If you wish to comment on actions by employees of the Coast Guard, call 1–888–REG–FAIR (1–888–734–3247).

Collection of Information

This rule contains no information collection requirements under the Paperwork Reduction Act (44 U.S.C. 3501 *et seq.*).

Federalism

The Coast Guard has analyzed this rule under the principles and criteria contained in Executive Order 12612 and has determined that this rule does not federalism implication under that order.

Unfunded Mandates Reform Act

The Unfunded Mandates Reform Act of 1995 (2 U.S.C. 1531–1538) requires Federal agencies to assess the effects of their discretionary regulatory actions. In particular, the Act addresses actions that may result in the expenditure by a State, local, or tribal government, in the aggregate, or by the private sector of $100,000,000 or more in any one year. Though this proposed rule would not result in such an expenditure, we do discuss the effects of this rule elsewhere in this preamble.

Taking of Private Property

This rule will not effect a taking of private property or otherwise have taking implications under Executive Order 12630, Governmental Actions and Interference with Constitutionally Protected Property Rights.

Civil Justice Reform

This rule meets applicable standards in sections 3(a) and 3(b) (2) of Executive Order 12988, Civil Justice Reform, to minimize litigation, eliminate ambiguity, and reduce burden.

Protection of Children

The Coast Guard has analyzed this rule under Executive Order 13045, Protection of Children from Environmental Health Risks and Safety Risks. This rule is not an economically significant rule and does not concern an environmental risk to health or risk to safety that may disproportionately affect children.

Environment

The Coast Guard considered the environmental impact of this regulation and concluded that, under figure 2–1, paragraph (34)(g) of Commandant Instruction M16475.1C, it is categorically excluded from further environmental documentation. A ''Categorical Exclusion Determination'' is available in the docket for inspection or copying where indicated under **ADDRESSES.**

Indian Tribal Governments

This rule does not have tribal implications under Executive Order 13175, Consultation and Coordination with Indian Tribal Governments, because it does not have a substantial direct effect on one or more Indian tribes, on the relationship between the Federal Government and Indian tribes, or on the distribution of power and responsibilities between the Federal Government and Indian tribes.

Energy Effects

We have analyzed this proposed rule under Executive Order 13211, Actions Concerning Regulations That Significantly Affect Energy Supply, Distribution, or Use. We have determined that it is not a ''significant energy action'' under that order because it is not a ''significant regulatory action'' under Executive Order 12866 and is not likely to have a significant adverse effect on the supply, distribution, or use of energy. It has not been designated by the Administrator of the Office of Information and Regulatory Affairs as a significant energy action. Therefore, it does not require a Statement of Energy Effects under Executive Order 13211.

List of Subjects

33 CFR Part 110

Anchorage grounds.

33 CFR Part 165

Harbors, Marine safety, Navigation (water), Reporting and record keeping requirements, Security measures, Waterways.

For the reasons set out in the preamble, the Coast Guard amends 33 CFR parts 110 and 165 as follows:

PART 110—ANCHORAGE REGULATIONS

1. The authority citation for part 110 continues to read as follows:

Authority: 33 U.S.C. 471, 1221 through 1236, 2030, 2035, 2071; 49 CFR 1.46 and 33 CFR 1.05–1(g).

§ 110.83 [Amended]

2. In § 110.83, suspend paragraph (a) from 11 p.m. December 31, 2001(local time) until 12:45 a.m. (local time) on January 1, 2002.

PART 165—REGULATED NAVIGATION AREAS AND LIMITED ACCESS AREAS

3. The authority citation for part 165 continues to read as follows:

Authority: 33 U.S.C. 1231; 50 U.S.C. 191, 33 CFR 1.05–1(g), 6.04–1, 6.04–6 160.5; 49 CFR 1.46.

4. A new temporary § 165.T09–123 is added to read as follows:

§ 165.T09–123 Safety Zone; Chicago Harbor, Chicago, Illinois.

(a) *Location.* The safety zone will encompass the waters of the Lake Michigan in the Chicago Harbor, including a portion of the Monroe Street harbor and the entrance to the Monroe Street Harbor, bounded by the following positions: starting at 41° 52.43 N, 087° 36.43 W, thence east to 41° 52.43 N, 087° 36.16 W, thence south to 41° 52.28 N, 087° 36.16 W, thence west to 41° 52.28 N, 087° 36.43 W, thence north back to the point of origin.

(b) *Effective time and date.* This section is effective from 11 p.m. (local time) December 31, 2001 until 12:45 a.m. (local time) on January 1, 2002.

(c) *Regulations.* In accordance with the general regulations in § 165.23 of this part, entry into this zone is prohibited unless authorized by the Coast Guard Captain of the Port Chicago, or his designated on-scene representative. The Captain of the Port Chicago or his designated on-scene representative may be contacted via VHF Channel 16. The designated on-scene representative will be the Patrol Commander.

Dated: December 17, 2001.

James D. Hull,

Rear Admiral, U.S. Coast Guard, District Commander, Ninth Coast Guard District.

[FR Doc. 01–31843 Filed 12–26–01; 8:45 am]

BILLING CODE 4910–15–P

DEPARTMENT OF TRANSPORTATION

Coast Guard

33 CFR Parts 110 and 165

[CGD09–01–139]

RIN 2115–AA97 and 2115–AA98

Security Zone and Anchorage Regulations; Lake Michigan, Navy Pier, Chicago Harbor, Chicago, Illinois

AGENCY: Coast Guard, DOT.

ACTION: Temporary final rule, request for comments.

SUMMARY: The Coast Guard is establishing a temporary security zone and suspending an anchorage area encompassed by the security zone on the navigable waters of Lake Michigan around Chicago, Illinois. This security zone is necessary to protect the Navy Pier from possible sabotage or other subversive acts, accidents, or possible acts of terrorism. This zone is intended to restrict vessel traffic from a portion of Lake Michigan.

DATES: This rule is effective at 3 p.m. (local), December 17, 2001 until 11 a.m. (local) March 1, 2002.

ADDRESSES: Comments and material received from the public, as well as documents indicated in this preamble as being available in the docket, are part of docket CGD09–01–139 and are available for inspection or copying at 215 W. 83rd Street, Chicago, Illinois 60521 between 7:30 a.m. and 4 p.m., Monday through Friday, except Federal holidays.

FOR FURTHER INFORMATION CONTACT: Petty Officer Mike Hogan, U.S. Coast Guard Marine Safety Office Chicago, 215 W. 83rd Street, Burr Ridge, Illinois 60521. The telephone number is (630) 986–2175.

SUPPLEMENTARY INFORMATION:

Regulatory History

We did not publish a notice of proposed rulemaking (NPRM) for this regulation. Under 5 U.S.C. 553(b)(B), the Coast Guard finds that good cause exists for not publishing an NPRM, and, under 5 U.S.C. 553(d)(3), good cause exists for making this rule effective less than 30 days after publication in the **Federal Register**. Following the catastrophic nature and extent of damage realized from the aircraft flown into the World Trade Center towers, this rulemaking is urgently necessary to protect the national security interests of the United States against future potential terrorists strikes against public and governmental targets. A similar attack was conducted against the Pentagon on the same day. National security and intelligence officials warn that future terrorist attacks against civilian targets may be anticipated. Publication of a notice of proposed rulemaking and delay of effective date would be contrary to the public interest because immediate action is necessary to protect against the possible loss of life, injury, or damage to property.

Background and Purpose

On September 11, 2001, both towers of the World Trade Center, New York City, New York, were destroyed as a result of two commercial airliner crashes, an act of terrorism. This regulation establishes a security zone over the waters of Lake Michigan encompassed by a line drawn from the northeast corner of the Central District Filtration Plant, at 41° 53′46″ N, 87° 36′09″ W; then east to the breakwall at 41° 53′46″ N, 87° 35′30″ W; south to 41° 53′20″ N, 87° 35′30″ N; west to 41° 53′20″ N, 87° 36′20″ W; and then following the shoreline back to the point of origin. These coordinates are based upon North American Datum 1983 (NAD 83).

Since this security zone will encompass an already established anchorage area, this anchorage area will be suspended for the duration of this temporary security zone. The anchorage areas are described in 33 CFR 110.205, Chicago Harbor, Illinois. The anchorage areas specified in paragraph (a)(1), Anchorage A, exterior breakwaters and (a)(5), Anchorage E, Chicago Harbor Lock North, will be suspended.

This security zone is necessary to protect the public, the facilities, and the surrounding area from possible acts of sabotage or other subversive acts. All persons and vessels other that those approved by the Captain of the Port Chicago, or his authorized patrol representative, are prohibited from entering or moving within the zone without the prior approval of the Captain of the Port Chicago.

The Captain of the Port Chicago will generally permit those passenger vessels that normally operate from the Navy Pier to regularly transit the area. However, should the Captain of the Port Chicago determine it is appropriate, he will require even those vessels which normally operate from the Navy Pier to request permission before leaving or entering the security zone. The Captain of the Port Chicago may be contacted via VHF Channel 16.

In addition to publication in the **Federal Register**, the public will be made aware of the existence of this security zone, its exact location within these boundaries, and the restrictions

involved, via Broadcast Notice to Mariners.

Pursuant to 33 U.S.C. 1232, any violation of the security zone described herein, is punishable by civil penalties (not to exceed $27,500 per violation, where each day of a continuing violation is a separate violation), criminal penalties (imprisonment for not more than 6 years and a fine of not more than $250,000), in rem liability against the offending vessel, and license sanctions. Any person who violates this regulation, using a dangerous weapon, or who engages in conduct that causes bodily injury or fear of imminent bodily injury to any officer authorized to enforce this regulation, also faces imprisonment up to 12 years (class C felony).

Regulatory Evaluation

This rule is not a ''significant regulatory action'' under section 3(f) of Executive Order 12866 and does not require an assessment of potential costs and benefits under section 6(a)(3) of that Order. The Office of Management and Budget has not reviewed it under that Order. It is not ''significant'' under the regulatory policies and procedures of the Department of Transportation (DOT)(44 FR 11040, February 26, 1979).

The Coast Guard expects the economic impact of this proposal to be so minimal that a full Regulatory Evaluation under paragraph 10 (e) of the regulatory policies and procedures of DOT is unnecessary.

Small Entities

Under the Regulatory Flexibility Act (5 U.S.C. 601–612), we considered whether this rule would have a significant economic impact on a substantial number of small entities. The term ''small entities'' comprises small businesses, not-for-profit organizations that are independently owned and operated and are not dominant in their fields, and governmental jurisdictions with populations of less than 50,000.

The Coast Guard certifies under 5 U.S.C. 605(b) that this rule will not have a significant economic impact on a substantial number of small entities.

This security zone will not have a significant economic impact on a substantial number of small entities for the following reasons. This rule will not obstruct the regular flow of traffic and will allow vessel traffic to pass safely around the security zone. In addition, those passenger vessels that normally operate out of Navy Pier will be permitted to transit the zone. However, should the Captain of the Port Chicago determine it is appropriate, he may require even those vessels which normally operate from the Navy Pier to request permission from his on-scene representative before leaving or entering the security zone. The Captain of the Port Chicago's on-scene representative will be the Patrol Commander. The Captain of the Port Chicago will notify these vessels via Broadcast Notice to Mariners if they must notify the Coast Guard before transiting the security zone.

Assistance for Small Entities

Under section 213(a) of the Small Business Regulatory Enforcement Fairness Act of 1996 (Pub. L. 104–121), we offer to assist small entities in understanding the rule so that they could better evaluate its effects on them and participate in the rulemaking process. If you are a small entity and you need assistance in how the rule applies to you, please contact the office listed in **ADDRESSES** in this preamble.

Small businesses may send comments on the actions of Federal employees who enforce, or otherwise determine compliance with, Federal regulations to the Small Business and Agriculture Regulatory Enforcement Ombudsman and the Regional Small Business Regulatory Fairness Boards. The Ombudsman evaluates these actions annually and rates each agency's responsiveness to small business. If you wish to comment on actions by employees of the Coast Guard, call 1–888–REG–FAIR (1–888–734–3247).

Collection of Information

This rule calls for no new collection of information under the Paperwork Reduction Act of 1995 (44 U.S.C. 3501–3520).

Federalism

We have analyzed this rule under Executive Order 13132 and have determined that this rule does not have implications for federalism under that Order.

Unfunded Mandates Reform Act

The Unfunded Mandates Reform Act of 1995 (2 U.S.C. 1531–1538) requires Federal agencies to assess the effects of their discretionary regulatory actions. In particular, the Act addresses actions that may result in the expenditure by a State, local, or tribal government, in the aggregate, or by the private sector of $100,000,000 or more in any one year. Though this rule will not result in such expenditure, we do discuss the effects of this rule elsewhere in this preamble.

Taking of Private Property

This rule will not effect a taking of private property or otherwise have taking implications under Executive Order 12630, Governmental Actions and Interference with Constitutionally Protected Property Rights.

Civil Justice Reform

This rule meets applicable standards in sections 3(a) and 3(b)(2) of Executive Order 12988, Civil Justice Reform, to minimize litigation, eliminate ambiguity, and reduce burden.

Protection of Children

We have analyzed this rule under Executive Order 13045, Protection of Children from Environmental Health Risks and Safety Risks. This rule is not an economically significant rule and does not concern an environmental risk to health or risk to safety that may disproportionately affect children.

Indian Tribal Governments

This rule does not have tribal implications under Executive Order 13175, Consultation and Coordination with Indian Tribal Governments, because it does not have a substantial direct effect on one or more Indian tribes, on the relationship between the Federal Government and Indian tribes, or on the distribution of power and responsibilities between the Federal Government and Indian tribes.

Energy Effects

We have analyzed this rule under Executive Order 13211, Actions Concerning Regulations That Significantly Affect Energy Supply, Distribution, or Use. We have determined that it is not a ''significant energy action'' under that order because it is not a ''significant regulatory action'' under Executive Order 12866 and is not likely to have a significant adverse effect on the supply, distribution, or use of energy. It has not been designated by the Administrator of the Office of Information and Regulatory Affairs as a significant energy action. Therefore, it does not require a Statement of Energy Effects under Executive Order 13211.

Environment

The Coast Guard considered the environmental impact of this rule and concluded that under figure 2–1, paragraph (34)(g), of Commandant Instruction M16475.lC, this rule is categorically excluded from further environmental documentation.

List of Subjects

33 CFR Part 110

Anchorage grounds.

33 CFR Part 165

Harbors, Marine safety, Navigation (water), Reporting and recordkeeping requirements, Security measures, Waterways.

For the reasons discussed in the preamble, the Coast Guard amends 33 CFR parts 110 and 165 as follows:

PART 110—ANCHORAGE REGULATIONS

1. The authority citation for part 110 continues to read as follows:

Authority: 33 U.S.C. 471, 1221 through 1236, 2030, 2035, and 2071; 49 CFR 1.46 and 33 CFR 1.05–1(g).

§ 110.205 [Amended]

2. In § 110.205, suspend paragraphs (a)(1) and (a)(5) from 3 p.m. (local) December 17, 2001, until 11 a.m. (local) March 1, 2002.

PART 165—REGULATED NAVIGATION AREAS AND LIMITED ACCESS AREAS.

3. The authority citation for part 165 continues to read as follows:

Authority: 33 U.S.C. 1231; 50 U.S.C. 191, 33 CFR 1.05–1(g), 6.04–1, 6.04–6, 160.5; 49 CFR 1.46.

4. A new temporary § 165.T09–112 is added to read as follows:

§ 165.T09–112 Security zone; Lake Michigan, Navy Pier, Chicago Harbor, Chicago, IL

(a) *Location.* The following is a security zone: All waters of Lake Michigan encompassed by a line drawn from the northeast corner of the Central District Filtration Plant (41°53′46″ N, 87°36′09″ W); then east to the breakwall at 41°53′46″ N, 87°35′30″ W; then south to 41°53′20″ N, 87°35′30″ W; west to 41°53′20″ N, 87°36′20″ W; then following the shoreline back to the point of origin (NAD 83).

(b) *Effective dates.* This section is effective from 3 p.m. December 17, 2001 through 11 a.m. (local), March 1, 2002.

(c) *Regulations.*

(1) This section is issued under § 7 of the Ports and Waterways Safety Act (33 U.S.C. 1226).

(2) In accordance with the general regulations in § 165.33 of this part, entry into or movement within this zone is prohibited unless authorized by the Coast Guard Captain of the Port Chicago.

(3) The Captain of the Port Chicago will generally permit those passenger vessels that normally operate from the Navy Pier to regularly transit the area. However, should the Captain of the Port Chicago determine it is appropriate, he will require even those vessels which normally operate from the Navy Pier to request permission before leaving or entering the security zone. The Captain of the Port Chicago will notify these vessels via Broadcast Notice to Mariners if they must notify the Coast Guard before transiting the security zone. The Captain of the Port Chicago may be contacted via VHF Channel 16.

(4) All persons and vessels shall comply with the instruction of the Captain of the Port Chicago or the designated on-scene U.S. Coast Guard patrol personnel. On-scene patrol personnel include commissioned, warrant, and petty officers of the U.S. Coast Guard on board Coast Guard, Coast Guard Auxiliary, local, state, and federal law enforcement vessels. Emergency response vessels are authorized to move within the zone but must abide by the restrictions imposed by the Captain of the Port.

Dated: December 17, 2001.

James D. Hull,

Rear Admiral, U.S. Coast Guard, Commander, Ninth Coast Guard District.

[FR Doc. 01–31844 Filed 12–26–01; 8:45 am]

BILLING CODE 4910–15–P

DEPARTMENT OF TRANSPORTATION

Coast Guard

33 CFR Part 117

[CGD08–01–042]

RIN 2115–AE47

Drawbridge Operation Regulation; Mississippi River, Iowa and Illinois

AGENCY: Coast Guard, DOT.

ACTION: Temporary rule.

SUMMARY: The Commander, Eighth Coast Guard District is temporarily changing the regulation governing the Rock Island Railroad and Highway Drawbridge, Mile 482.9, Upper Mississippi River. The drawbridge will be allowed to remain closed to navigation from 8 a.m., December 19, 2001, until 8 a.m., March 11, 2002. This change is necessary to perform annual maintenance and repair work on the bridge.

DATES: This temporary rule is effective from 8 a.m. Central Standard Time (CST) on December 19, 2001, to 8 a.m. Central Standard Time (CST) on March 11, 2002.

ADDRESSES: Material received from the public, as well as documents indicated in this preamble as being available in the docket, are part of docket CGD08–01–042 and are available for inspection or copying at room 2.107f in the Robert A. Young Federal Building at the Eighth Coast Guard District, Bridge Branch, 1222 Spruce Street, St. Louis, MO 63103–2832, between 7 a.m. and 4 p.m., Monday through Friday, except Federal holidays.

FOR FURTHER INFORMATION CONTACT: Mr. Roger K. Wiebusch, Bridge Administrator, Eighth Coast Guard District, Bridge Branch at (314) 539–3900, extension 378.

SUPPLEMENTARY INFORMATION:

Regulatory Information

We did not publish a notice of proposed rulemaking (NPRM) for this regulation. Under 5 U.S.C. 553(b)(B), the Coast Guard finds that good cause exists for not publishing an NPRM. This rule is being promulgated without an NPRM due to the short time frame allowed between the submission of the request by the Department of the Army, Rock Island Arsenal and the date of requested closure. The Coast Guard received the request from the Department of the Army, Rock Island Arsenal, on 25 October 2001. Winter conditions on the Upper Mississippi River coupled with the closure of the Army Corps of Engineers' Lock No. 24 (Mile 273.4 UMR) until March 2, 2002 and Lock No. 12 (Mile 556.7) until March 11, 2002, will preclude any significant navigation demands for the drawspan opening .

Under 5 U.S.C. 553(d)(3), the Coast Guard finds that good cause exists for making this rule effective less than 30 days after publication in the **Federal Register**. This temporary drawbridge operation amendment has been coordinated with the commercial waterway operators. No objections were raised.

Background and Purpose

On October 25, 2001, the Department of the Army, Rock Island Arsenal requested a temporary change to the operation of the Rock Island Railroad and Highway Drawbridge across the Upper Mississippi River, Mile 482.9 at Rock Island, Illinois. The Department of the Army, Rock Island Arsenal requested that the drawbridge be temporarily closed to navigation in order to perform necessary maintenance and bridge repair during the winter months.

The Rock Island Railroad and Highway Drawbridge has a vertical clearance of 23.8 feet above normal pool in the closed-to-navigation position. Navigation on the waterway consists primarily of commercial tows and recreational watercraft. Presently, the

draw opens on signal for passage of river traffic. The Department of the Army, Rock Island Arsenal requested the drawbridge be permitted to remain closed-to-navigation from 8 a.m., December 19, 2001, until 8 a.m., March 11, 2002. Winter conditions on the Upper Mississippi River coupled with the closure of the Army Corps of Engineers' Lock No. 24 (Mile 273.4 UMR) until March 2, 2002 and Lock No. 12 (Mile 556.7) until March 11, 2002, will preclude any significant navigation demands for the drawspan opening. The Rock Island Railroad and Highway Drawbridge, Mile 482.9 Upper Mississippi River, is located upstream from Lock 24. Performing maintenance on the bridge during the winter months when no vessels are impacted is preferred to bridge closures or advance notification requirements during the commercial navigation season. This temporary drawbridge operation amendment has been coordinated with the commercial waterway operators. No objections were raised.

Regulatory Evaluation

This rule is not a ''significant regulatory action'' under section 3(f) of Executive Order 12866, Regulatory Planning and Review, and does not require an assessment of potential costs and benefits under section 6(a)(3) of that Order. The Office of Management and Budget has not reviewed it under that Order. It is not ''significant'' under the regulatory policies and procedures of the Department of Transportation (DOT) (44 FR 11040, February 26, 1979).

The Coast Guard expects the economic impact of the temporary rule to be so minimal that a full Regulatory Evaluation under paragraph 10(e) of the regulatory policies and procedures of DOT is unnecessary. This is because river traffic will be extremely limited by lock closures and ice during this period.

Small Entities

Under the Regulatory Flexibility Act (5 U.S.C. 601–612), we have considered whether this rule would have a significant economic impact on a substantial number of small entities. The term ''small entities'' comprises small businesses, not-for-profit organizations that are independently owned and operated and are not dominant in their fields, and governmental jurisdictions with populations of less than 50,000.

The Coast Guard certifies under 5 U.S.C. 605(b) that this rule will not have a significant economic impact on a substantial number of small entities.

Assistance for Small Entities

Under section 213(a) of the Small Business Regulatory Enforcement Fairness Act of 1996 (Public Law 104–121), we offered to assist small entities in understanding the rule so that they can better evaluate its effects on them and participate in the rulemaking process. Any individual that qualifies or, believes he or she qualifies as a small entity and requires assistance with the provisions of this rule, may contact Mr. Roger K. Wiebusch, Bridge Administrator, Eighth Coast Guard District, Bridge Branch, at (314) 539–3900, extension 378.

Small businesses may send comments on the actions of Federal employees who enforce, or otherwise determine compliance with, Federal regulations to the Small Business and Agriculture Regulatory Enforcement Ombudsman and the Regional Small Business Regulatory Fairness Boards. The Ombudsman evaluates these actions annually and rates each agency's responsiveness to small business. If you wish to comment on actions by employees of the Coast Guard, call 1–888–REG–FAIR (1–888–734–3247).

Collection of Information

This rule contains no new collection-of-information under the Paperwork Reduction Act of 1995 (44 U.S.C. 3501–3520).

Federalism

A rule has implications for federalism under Executive Order 13132, Federalism, if it has a substantial direct effect on State or local governments and would either preempt State law or impose a substantial direct cost of compliance on them. We have analyzed this rule under that Order and have determined that this rule does not have implications for federalism.

Unfunded Mandates Reform Act

The Unfunded Mandates Reform Act of 1995 (2 U.S.C. 1531–1538) requires Federal agencies to assess the effects of their discretionary regulatory actions. In particular, the Act addresses actions that may result in the expenditure by a State, local, or tribal government, in the aggregate, or by the private sector or $100,000,000 or more in any one year. Though this rule will not result in such an expenditure, we do discuss the effects of this rule elsewhere in this preamble.

Taking of Private Property

This rule will not affect a taking of private property or otherwise have taking implications under Executive Order 12630, Governmental Actions and Interference with Constitutionally Protected Property Rights.

Civil Justice Reform

This rule meets applicable standards in sections 3(a) and 3(b)(2) of Executive Order 12988, Civil Justice Reform, to minimize litigation, eliminate ambiguity, and reduce burden.

Protection of Children

We have analyzed this rule under Executive Order 13045, Protection of Children from Environmental Health Risks and Safety Risks. This rule is not an economically significant rule and does not concern an environmental risk to health or risk to safety that may disproportionately affect children.

Indian Tribal Governments

This rule does not have tribal implications under Executive Order 13175, Consultation and Coordination with Indian Tribal Governments, because it does not have a substantial direct effect on one or more Indian tribes, on the relationship between the Federal Government and Indian tribes, or on the distribution of power and responsibilities between the Federal Government and Indian tribes.

Energy Effects

We have analyzed this rule under Executive Order 13211, Actions Concerning Regulations That Significantly Affect Energy Supply, Distribution, or Use. We have determined that it is not a ''significant energy action'' under that order because it is not a ''significant regulatory action'' under Executive Order 12866 and is not likely to have a significant adverse effect on the supply, distribution, or use of energy. It has not been designated by the Administrator of the Office of Information and Regulatory Affairs as a significant energy action. Therefore, it does not require a Statement of Energy Effects under Executive Order 13211.

Environment

We have considered the environmental impact of this rule and concluded that under figure 2–1, paragraph (32)(e), of Commandant Instruction M16475.1 (series), this rule is categorically excluded from further environmental documentation. Promulgation of changes to drawbridge regulations has been found not to have significant effects on the human environment. A ''Categorical Exclusion Determination'' is available in the docket for inspection or copying where indicated under **ADDRESSES.**

List of Subjects in 33 CFR Part 117

Bridges.

For the reasons discussed in the preamble, the Coast Guard amends 33 CFR part 117 as follows:

PART 117—DRAWBRIDGE OPERATION REGULATIONS

1. The authority citation for part 117 continues to read as follows:

Authority: 33 U.S.C. Sec. 499; 49 CFR 1.46; 33 CFR 1.05–1(g).

2. From 8 a.m., December 19, 2001, through 8 a.m., March 11, 2002, § 117. T392 is added to read as follows:

§ 117.T392 Upper Mississippi River.

Rock Island Railroad and Highway Drawbridge Mile 482.9 Upper Mississippi River.

From 8 a.m. (CST), December 19, 2001 through 8 a.m. (CST), March 11, 2002, the drawspan is allowed to be maintained in the closed to navigation position and need not open for vessel traffic.

Dated: December 7, 2001.

Roy J. Casto,

Rear Admiral, U.S. Coast Guard, Commander, Eighth Coast Guard District.

[FR Doc. 01–31841 Filed 12–26–01; 8:45 am]

BILLING CODE 4910–15–P

DEPARTMENT OF TRANSPORTATION

Coast Guard

33 CFR Part 165

[CGD05–01–080]

RIN 2115–AE84

Regulated Navigation Area; Chesapeake Bay Entrance and Hampton Roads, VA and Adjacent Waters

AGENCY: Coast Guard, DOT.

ACTION: Temporary final rule.

SUMMARY: Commander, Fifth Coast Guard District is temporarily expanding the geographic definition of the Hampton Roads Regulated Navigation Area to include the waters of the 12 nautical mile territorial sea off the Coast of Virginia and adding new port security measures, in order to improve the safety and security of vessel traffic at the entrance to Chesapeake Bay and Hampton Roads, Virginia. The effect of this temporary rule will be to ensure the safety and security of the boating public, local military commands, and commercial shipping interests in the area.

DATES: This temporary final rule is effective from December 11, 2001 to June 15, 2002.

ADDRESSES: Documents as indicated in this preamble are available for inspection or copying at USCG Marine Safety Office Hampton Roads, 200 Granby Street, Norfolk, Virginia, 23510 between 9:30 a.m. and 2 p.m., Monday through Friday, except Federal holidays.

FOR FURTHER INFORMATION CONTACT: Lieutenant Junior Grade Monica Acosta, project officer, USCG Marine Safety Office Hampton Roads, telephone number (757) 441–3453.

SUPPLEMENTARY INFORMATION:

Regulatory Information

We did not publish a notice of proposed rulemaking (NPRM) for this regulation and the rule takes effect immediately. Under 5 U.S.C. 553(b)(B), the Coast Guard finds that good cause exists for not publishing an NPRM. Immediate action is necessary to ensure the safety and security of the public, naval vessels moored at Naval Station Norfolk, and the commercial shipping industry in Hampton Roads, VA. There have been recent reports, all a matter of public record, that indicate a continuing high risk of terrorist activity in the United States. Based on these reports, the Fifth Coast Guard District Commander has determined a heightened security condition in the Port of Hampton Roads is required. Delay in implementing these changes, therefore, would be contrary to the public interest.

For similar reasons, under 5 U.S.C. 553(d)(3), the Coast Guard finds that good cause exists for making this temporary rule effective less than 30 days after publication in the **Federal Register**.

Background and Purpose

This temporary rule is necessary for the District Commander to reduce the potential threat to the Port of Hampton Roads, VA and surrounding waterways. The Coast Guard, as lead federal agency for maritime homeland security, must have the means to be aware of, deter, detect, intercept, and respond to asymmetric threats, acts of aggression, and attacks by terrorists on the American homeland while at the same time maintaining our freedoms and sustaining the flow of commerce. The Coast Guard implements Limited Access Areas, listed in 33 CFR part 165, in order to control vessel movements within Captain of the Port Zones. A Regulated Navigation Area is a type of Limited Access Area that may be used to control vessel traffic by specifying times of vessel entry, movement, or departure to, from, within, or through ports, harbors or other waters. The temporary rule the District Commander has established by this rulemaking allows for differentiation between lawful and unlawful maritime activities without unreasonably disrupting the free flow of commerce.

The District Commander has created a series of validation procedures to identify legitimate users of the Port of Hampton Roads. Validation procedures for vessels in excess of 300 GT, including tug and barge combinations in excess of 300 gross tons combined, include the following:

1. Vessels must check in with the Captain of the Port or his representative at least 30 minutes prior to entry to obtain permission to transit the Regulated Navigation Area.

2. Upon authorization and approval by the Captain of the Port or his representative, the vessel may enter the Regulated Navigation Area.

3. All vessels that receive permission to enter the Regulated Navigation Area remain subject to a Coast Guard port security boarding.

4. Thirty (30) minutes prior to getting underway, vessels departing or moving within the Regulated Navigation Area must contact the Captain of the Port or his representative via VHF–FM channel 13 or 16, call (757) 444–5209/5210, or call (757) 441–3298 for the Captain of the Port Command Duty Officer.

The Captain of the Port will notify the public of changes in the status of the port security requirements by marine information broadcast on VHF–FM marine band radio, channel 22A (157.1 MHz)

Regulatory Evaluation

This temporary final rule is not a significant regulatory action under section 3(f) of Executive Order 12866 and does not require an assessment of potential costs and benefits under section 6(a)(3) of that Order. It has not been reviewed by the Office of Management and Budget under that Order. It is not significant under the regulatory policies and procedures of the Department of Transportation (DOT) (44 FR 11040, February 26, 1979). This temporary final rule will affect only those vessels in excess of 300 GT that enter and depart the Port of Hampton Roads and it is implemented for a limited duration. Therefore, we expect the economic impact of this temporary final rule to be so minimal that a full Regulatory Evaluation under paragraph 10e of the regulatory policies and procedures of DOT is unnecessary.

Small Entities

Under the Regulatory Flexibility Act (5 U.S.C. 601—612), we have considered whether this temporary rule will have a significant economic impact on a substantial number of small entities. ''Small entities'' include small businesses, not-for-profit organizations that are independently owned and operated and are not dominant in their fields, and governmental jurisdictions with populations of less than 50,000.

The Coast Guard certifies under 5 U.S.C. 605(b) that this temporary rule will not have a significant economic impact on a substantial number of small entities. This temporary rule will affect only the following entities, some of which may be small entities: owners and operators of commercial vessels larger than 300 gross tons intending to transit or anchor in the Regulated Navigation Area. Because the number of small entities owning/operating commercial vessels of this size is not substantial, the rule is for a limited duration, and there is little anticipation of delay when requesting entry into the Area, the economic impact of this temporary rule should be minimal.

If, however, you believe that your business or organization qualifies as a small entity and that this temporary rule will have a significant economic impact on your business or organization, please submit a comment (see **ADDRESSES**) explaining why you believe it qualifies and in what way and to what degree this temporary rule will economically affect it.

Assistance for Small Entities

Under section 213(a) of the Small Business Regulatory Enforcement Fairness Act of 1996 (Public Law 104–121), we offer to assist small entities in understanding the rule so that they can better evaluate its effects on them and participate in the rulemaking process.

Small businesses may send comments on the actions of Federal employees who enforce, or otherwise determine compliance with, Federal regulations to the Small Business and Agriculture Regulatory Enforcement Ombudsman and the Regional Small Business Regulatory Fairness Boards. The Ombudsman evaluates these actions annually and rates each agency's responsiveness to small business. If you wish to comment on actions by employees of the Coast Guard, call 1–888–REG–FAIR (1–888–734–3247).

Collection of Information

This temporary rule does not provide for a collection of information under the Paperwork Reduction Act of 1995 (44 U.S.C. 3501 *et seq.*).

Federalism

A rule has implications for federalism under Executive Order 13132, Federalism, if it has a substantial direct effect on State or local governments and would either preempt State law or impose a substantial direct cost of compliance on them. We have analyzed this temporary rule under that Order and have determined that it does not have implications for federalism.

Unfunded Mandates

The Unfunded Mandates Reform Act of 1995 (2 U.S.C. 1531–1538) requires Federal agencies to assess the effects of their discretionary regulatory actions. In particular, the Act addresses actions that may result in the expenditure by a State, local, or tribal government, in the aggregate, or by the private sector of $100,000,000 or more in any one year. Though this temporary rule will not result in such expenditure, we do discuss the effects of this temporary rule elsewhere in this preamble.

Taking of Private Property

This temporary rule will not effect a taking of private property or otherwise have taking implications under Executive Order 12630, Governmental Actions and Interference with Constitutionally Protected Property Rights.

Civil Justice Reform

This temporary rule meets applicable standards in sections 3(a) and 3(b)(2) of Executive Order 12988, Civil Justice Reform, to minimize litigation, eliminate ambiguity, and reduce burden.

Protection of Children

We have analyzed this temporary rule under Executive Order 13045, Protection of Children from Environmental Health Risks and Safety Risks. This temporary rule is not an economically significant rule and does not create an environmental risk to health or risk to safety that may disproportionately affect children.

Indian Tribal Governments

This temporary rule does not have tribal implications under Executive Order 13175, Consultation and Coordination with Indian Tribal Governments, because it does not have a substantial direct effect on one or more Indian tribes, on the relationship between the Federal Government and Indian tribes, or on the distribution of power and responsibilities between the Federal Government and Indian tribes.

Energy Effects

We have analyzed this temporary rule under Executive Order 13211, Actions Concerning Regulations That Significantly Affect Energy Supply, Distribution, or Use. We have determined that it is not a ''significant energy action'' under that order because it is not a ''significant regulatory action'' under Executive Order 12866 and is not likely to have a significant adverse effect on the supply, distribution, or use of energy. It has not been designated by the Administrator of the Office of Information and Regulatory Affairs as a significant energy action. Therefore, it does not require a Statement of Energy Effects under Executive Order 13211.

Environment

The Coast Guard considered the environmental impact of this temporary final rule and concluded that under figure 2–1, paragraph (34)(g) of Commandant Instruction M16475.1C, this temporary final rule is categorically excluded from further environmental documentation. This temporary rule seeks to modify a well-established Regulated Navigation Area, and will be in effect for 6 months. A ''Categorical Exclusion Determination'' is available in the docket for inspection or copying where indicated under **ADDRESSES**.

List of Subjects in 33 CFR Part 165

Harbors, Marine safety, Navigation (water), Reporting and recordkeeping requirements, Security measures, Waterways.

For the reasons discussed in the preamble, the Coast Guard amends 33 CFR Part 165 as follows:

PART 165—REGULATED NAVIGATION AREAS AND LIMITED ACCESS AREAS

1. The authority citation for Part 165 continues to read as follows:

Authority: 33 U.S.C. 1231; 50 U.S.C. 191; 33 CFR 1.05–1(g), 6.04–1, 6.04–6, 160.5; 49 CFR 1.46.

2. From December 11, 2001 until June 15, 2002, in § 165.501, suspend paragraph (a)(1), and add paragraphs (a)(13), (d)(15), and (d)(16) to read as follows:

§ 165.501 Chesapeake Bay entrance and Hampton Roads, VA. and adjacent waters—regulated navigation area.

(a) * * *

(13) A line drawn due east from the mean low water mark at the North Carolina / Virginia border at latitude 36°33′03″ N, longitude 75°52′00″ W, to the Territorial Seas boundary line at latitude 36°33′05″ N, longitude 75°36′51″ W, thence generally

northeastward along the Territorial Seas boundary line to latitude 38°01′39″ N, longitude 74°57′18″ W, thence due west to the mean low water mark at the Maryland / Virginia border at latitude 38°01′39″ N, longitude 75°14′30″ W.

* * * * *

(d) * * *

(15) *Port Security Requirements.* No vessel in excess of 300 gross tons, including tug and barge combinations in excess of 300 gross tons (combined), shall enter the Regulated Navigation Area, move within the Area, or be present within the Area unless it complies with the following requirements.

(i) Obtain authorization to enter the Regulated Navigation Area from the Captain of the Port or his representative at least thirty minutes prior to entering the Regulated Navigation Area. All vessels entering or remaining in the Area may be subject to a Coast Guard boarding.

(ii) Follow all instructions issued by the Captain of the Port or his representative.

(iii) Ensure that no person who is not a permanent member of the vessel's crew, or a member of a Coast Guard boarding team, boards the vessel without presenting valid photo identification.

(iv) Report any departure from or movement within the Regulated Navigation Area to the Captain of the Port or his representative at least 30 minutes prior to getting underway.

(v) Contact the Captain of the Port or his representative on VHF–FM channel 13 or 16, or by calling (757) 444–5209 or (757) 444–5210.

(vi) In addition to the authorities listed in this Part, this section is promulgated under the authority under 33 U.S.C. 1226.

(16) For purposes of the port security requirements in paragraph (d)(15) of this section, the Captain of the Port or his representative means any official designated by the Captain of the Port including, but not limited to, any Coast Guard patrol vessel. All patrol vessels shall display the Coast Guard Ensign at all times when underway.

* * * * *

Dated: December 11, 2001.

T.W. Allen,

Vice Admiral, U.S. Coast Guard Commander, Fifth Coast Guard District.

[FR Doc. 01–31523 Filed 12–26–01; 8:45 am]

BILLING CODE 4910–15–U

DEPARTMENT OF THE INTERIOR

National Park Service

36 CFR Part 18

RIN 1024–AC78

Leasing Regulations

AGENCY: National Park Service, Interior.

ACTION: Final rule.

SUMMARY: This rule amends current National Park Service (NPS) regulations (36 CFR part 18) concerning the leasing of historic properties within areas of the national park system to encompass additional types of properties as authorized by law and to change in certain respects the procedural requirements for leasing of properties. This rule was published for public comment in the **Federal Register** on December 12, 2000 (65 FR 77538).

EFFECTIVE DATE: January 28, 2002.

FOR FURTHER INFORMATION CONTACT: Cindy Orlando, National Park Service, 1849 C Street, NW., Room 7311, Washington DC 20240 (202/565–1212).

SUPPLEMENTARY INFORMATION: Section 802 of the National Parks Omnibus Management Act, Pub. L. 105–391 (Section 802), authorizes NPS to grant leases for the use of buildings and associated property located within areas of the national park system to persons and governmental entities under certain conditions. This new leasing authority supplements existing NPS leasing authority concerning historic properties set forth in 16 U.S.C. 470h–3 and implemented in 36 CFR part 18. This amendment of 36 CFR part 18 combines in one regulation the leasing authority provided by Section 802 with the leasing authority provided by 16 U.S.C. 470h–3. In general, this rule permits NPS to lease buildings, lands associated with such buildings, and, historic land located within the boundaries of park areas. It does not permit the leasing of non-historic land.

This amendment of 36 CFR part 18 achieves simplification of the NPS historic leasing process as also called for by Section 802 and expands the scope of NPS leasing authority to all eligible properties. NPS also has authority to lease certain property located within units of the national park system under 16 U.S.C. 460l–22(a). This authority is implemented by NPS in 36 CFR part 17 which remains unchanged by the amended 36 CFR part 18. Eight public comments were received in response to the proposed rule. Several changes were made in response to them. In addition, the final rule contains a number of editorial changes and clarifications.

Section Content

The following discussion describes the general content of each section of the final regulation. Public comments on these sections are also addressed as appropriate.

Section 18.1

Authority and Purposes. Section 18.1 describes the authority for the rule. The basic authority is 16 U.S.C. 1 *et seq.*, (the National Park Service Organic Act), particularly 16 U.S.C. 1a–2(k) (the general NPS leasing authority contained in section 802 of Pub. L. 105–391), and 16 U.S.C. 470h–3 (government-wide leasing authority applicable to historic properties). NPS has included a ''grandfather'' provision in this section of the final regulation to permit the execution of proposed leases that were solicited under 36 CFR part 18 prior to the effective date of this part. In response to comments, NPS has clarified the particular categories of NPS property to which this part applies. In addition, NPS notes that although this part is couched in terms of leasing particular properties, nothing in this part precludes NPS from leasing a number of properties in a combined solicitation or from engaging management companies (where otherwise authorized) to assist in implementing an appropriate overall park area leasing program in accordance with the terms of this part.

Section 18.2

Section 18.2 defines the terms used in the proposed rule. NPS has clarified the definition of ''associated property'' in the final regulation to make clear that associated property may relate to one or more buildings. NPS has also clarified the definition of ''fair market value'' by making clear that the particular terms and conditions of the lease being offered are to be taken into account in determining the fair market value of the lease. Finally, NPS has clarified the definitions of property types as used in the regulation and added a definition of non-historic property as a clarification. A comment asked whether a limited liability company qualifies as a ''person'' for purposes of this part. It does. A comment suggested that the definition historic property be expanded to include properties determined historic by state or local governments. NPS notes that the definition used is statutory and, in any event, includes properties of state or local significance listed in the National Register of Historic Places.

Section 18.3

Section 18.3 describes the types of property that NPS may lease under this part. In general, this part applies to leases of both historic and non-historic property located within the boundaries of park areas. However, Section 18.3(b) makes clear that non-historic land, i.e., vacant land that is not located within the boundaries of an historic district, may not be leased under this part. This is because of the express limitations on the types of property that may be leased under the authorities for this part. However, certain types of vacant land located in eligible units of the national park system may be leased under 36 CFR part 17.

Section 18.4

Section 18.4 describes the types of determinations NPS must make before it may lease property under this part. Before leasing property under this part, NPS must determine that the lease: (1) Will not result in degradation of the purposes and values of the park area; (2) will not deprive the park area of property necessary for appropriate park protection, interpretation, visitor enjoyment, or administration of the park area; (3) contains such terms and conditions as will assure the leased property will be used for an activity and in a manner that is consistent with the purposes established by law for the park area in which the property is located; (4) is compatible with the programs of the National Park Service; (5) is for rent at least equal to the fair market value rent of the leased property as described in Section 18.5; (6) does not authorize activities that are subject to authorization through a concession contract, commercial use authorization or similar instrument; and (7), if the lease is to include historic property, that the lease will adequately insure the preservation of the historic property.

With respect to the first determination, NPS considers the term ''degradation'' of park area purposes and values (a term which tracks the provisions of Section 802) to provide the same protective standard as the terms ''derogation'' and ''impairment'' of park area resources as used in other NPS authorities.

A comment suggested that distinctions be made between the types of determinations necessary for ''big'' leases and ''small'' leases. However, NPS considers that the determinations required by this section are necessary for all leases, noting that a ''small'' lease'' may have a significant impact on park area resources.

Section 18.5

Section 18.5 describes the rent NPS must receive for property leased under this part. The rent must be at fair market value, determined after taking into account any restrictions NPS may place on the use of the leased property and any requirements for rehabilitation and maintenance of the leased property. The final regulation has been clarified in this respect. Comments suggested that consideration of year round occupancy, educational or governmental purposes be taken into account when determining fair market value rent. The regulation, however, does not preclude consideration of any relevant factor in determining fair market value. Another comment suggested that the regulation should provide authority for NPS to waive the fair market value rent requirement. NPS does not consider that this is within its leasing authority or otherwise appropriate. However, in response to a comment, NPS notes that cooperative agreements with non-profit organizations otherwise authorized by law may provide for assignment of government property to the cooperator without requiring the payment of fair market value rent. Such agreements are outside the scope of this regulation. A comment asked for examples as to the types of restrictions on use of the property that may reduce its fair market value. Examples are where NPS may not permit a property to be used for industrial purposes or may require that a property be used for educational purposes in the circumstances of a particular park area.

Section 18.6

Section 18.6(a) describes the types of uses that are permissible for property leased under this part. In general, leased property may be used for any lawful purpose subject to the determinations called for in Section 18.4. These uses may include, among others, office or other commercial uses. Innovative uses that are consistent with the requirements of this part are encouraged. Section 18.6(b) states that a lease issued under this part may not authorize the lessee to engage in activities that are subject to authorization through a concession contract, commercial use authorization or similar instrument. Proposed lease activities are subject to authorization under a concession contract if the Director determines in accordance with 36 CFR part 51 and park area planning documents and related guidelines and policies that the proposed activities meet applicable requirements for issuance of a concession contract. Proposed activities are subject to authorization under a commercial use authorization if the Director determines in accordance with park area planning documents and related guidelines and policies that the proposed activities meet applicable requirements for issuance of a commercial use authorization.

Section 18.7

Section 18.7 describes the procedures for leasing property through a public bid process. The bid process may only be used if the amount of rent is the sole criterion for award of a lease. The bid process calls for public notice of the lease opportunity, submission of offers on a date certain, and a public bid opening and selection by NPS. One comment suggested that award of leases under a bid system should be eliminated and another suggested an informal process that does not require publication or the submission of bids. NPS considers that the public bidding procedures of this section are appropriate. Another comment suggested that the bid system should not be used to lease historic property. NPS considers that the bid process will not be not frequently utilized. However, it wishes to retain the flexibility to do so in appropriate circumstances. For example, short-term leases of historic farmland for agricultural purposes may most efficiently be awarded through the bid process. Another comment in effect asked for further guidance on how general federal historic preservation requirements and procedures (e.g., 36 CFR part 800) apply to the leasing of historic property under this part. This is a subject that is beyond the scope of these regulations. However, 36 CFR part 800 discusses these matters in detail. NPS, in response to a comment, has added a financial capability determination as a request for bids requirement.

Section 18.8

Section 18.8 describes the procedures for leasing property through a proposal solicitation process. In general, the proposal solicitation process calls for public issuance of a Request for Proposals (''RFP'') that describes the leasing opportunity and the criteria for selection. After submission of proposals, NPS will select the best proposal upon application of established selection criteria. These include the compatibility of the proposal to the park area and its visitors, the experience and financial capability of the offeror, and the ability and commitment of the offeror to conduct its activities in an environmentally enhancing manner.

One comment suggested that the publication period for the solicitation should be reduced to thirty days. However, the regulation permits the sixty-day publication period to be shortened in appropriate circumstances. Another comment suggested that the rent offered be a separate selection factor. NPS does not consider this to be appropriate and that it would difficult to administer. A comment suggested that the ''tie-breaker'' standard contained in Section 18.8(f) be eliminated. NPS has changed the ''tie-breaker'' standard to a more general determination as to which proposal is the most beneficial on an overall basis. A comment also suggested that the regulations include a ''best and final offer'' provision. NPS, however, considers that the process described for proposal amendment is efficient and provides to the extent appropriate an equivalent of a ''best and final offer'' procedure in the event that two or more proposals are considered as substantially equal. A comment suggested that the ''specified'' period of time for negotiation of a final lease be changed so as to allow an unlimited period for negotiation, subject to termination by NPS. NPS considers that requiring a specified negotiation period (which is subject to extension by NPS) is a more effective means to conclude the negotiation in a timely manner. Another comment suggested that the regulation reference the ability of NPS to enter into exclusive negotiating agreements with the successful offeror. NPS has included reference to such agreements in Section 18.8(d) in the form of a letter of intent to negotiate.

Section 18.9

Section 18.9 permits NPS to lease property to non-profit organizations and governmental units without competitive procedures if NPS determines that the non-profit or governmental use of the property will contribute to the purposes and programs of the park area. This is a clarification of the proposed regulation that stated that such leases could be entered into when it is in the public interest to do so. NPS considers this authority necessary for appropriate implementation and integration of park area management and leasing program objectives.

A comment suggested that the authority for non-competitive award of leases should only apply when no proposals were received in response to a competitive solicitation. NPS considers this limitation too restrictive in light of NPS program needs and objectives. Another comment suggested that there should be authority to award leases non-competitively with private property owners. NPS, however, does not consider this to be consistent with its general policy of competitive leasing procedures. A comment misunderstood this section as permitting receipt of less than fair market value rent and suggested that ''small'' leases should be awarded through informal processes. Fair market value rent is required under this section. NPS considers that the formal leasing processes required by this part are necessary for effective implementation of NPS authorities.

Section 18.10

Section 18.10 describes the term of leases to be granted under the authority of this part. The term is to be no more than 60 years. Several comments suggested a longer-term limitation or no limitation at all. However, it has been the experience of NPS that a lease term of sixty years (or less) is sufficient for investment purposes (the maximum sixty year term permits two thirty year mortgage periods) and that a transaction that is seen to need a longer term to be successful is not likely to viable in the first instance. NPS notes the provisions of Title IV of the National Parks Omnibus Management Act of 1998 that limits the term of concession contracts to twenty years (reduced from thirty years under prior legislation) and which states that concession contracts should be for the shortest possible term. NPS considers that this statement of Congressional policy is equally applicable to leases. Another comment suggested specific terms for leases for historic property. NPS does not consider the inclusion of specific terms to be appropriate as the property's historic character will be taken into account when determining the lease term. Other comments suggested that NPS should have the authority to extend leases. However, NPS in general considers extensions to be anti-competitive and that they may result in leases that extend beyond any reasonable period of time to the detriment of the government. NPS, however, has added language to the final regulation that permits leases to be extended for up to one year if required by circumstances beyond the control of NPS. This is consistent with similar provisions contained in the concession contracting provisions of Title IV of the National Parks Omnibus Management Act of 1998 that permit short term extensions of concession contracts in limited circumstances.

Section 18.11

Section 18.11 describes the general terms and conditions that a lease granted under authority of this part must contain. These include provisions that assure use of the property in a manner consistent with the purposes of the applicable park area, and, if applicable, the preservation of historic property that may be leased.

Section 18.12

Section 18.12 describes a number of specific terms and conditions that a lease granted under the authority of this part must contain. These include a termination for cause provision, a clause requiring the lessee to maintain the leased property, provisions regarding the use of the leased property, and, provisions that state that any improvements a lessee may make may only be undertaken with the approval of NPS. 18.12(c). A comment suggested that Section 18.12(c) should be amended to delete the mandatory reference to subleases with respect to financial capability determinations. NPS does not agree with this suggestion as sublessees are, as a practical matter, the lessee of a specified portion of the leased property and therefore should be financially capable to carry out applicable terms of the lease.

18.12(d). NPS deleted reference to the disposition of insurance proceeds in this section. The terms of specific leases will address this subject. It also deleted specific reference to replacement cost insurance in response to a comment.

18.12(g). A comment suggested that fees NPS may collect from lessees for services provided by NPS be referenced in this section. NPS, however, does not consider that reference to such fees is appropriate as such fees, if any, are variable and implemented on a park by basis. Another comment suggested that Section 18.12(g) be amended to delete the reference to lease termination with respect to compensation for improvements. NPS deleted this provision in its entirety from the regulation as unnecessary in light of general legal limitations on the authority of NPS to contractually obligate the expenditure of unappropriated funds.

18.12(h). The provisions regarding lease extensions and renewal rights have been deleted from this subsection as redundant. A comment suggested that the reference in this subsection to the sovereign authority of the government to cancel leases may preclude a lender from obtaining a reinstated lease in the event of foreclosure and thus make the lease unfinancable. However, this subsection does not preclude this right in the event of lease foreclosure.

18.12(i). A comment suggested that leases should permit new construction in park areas. NPS considers that the

terms of this subsection, which do permit new construction in park areas in limited circumstances, are necessary in order to avoid impairment of park area resources and values.

18.2(m). A comment suggested modifying the term ''obligations'' in this subsection by the term ''monetary.'' However, this ''subject to availability of appropriated funds'' clause is a standard provision contained in government contracts.

Section 18.13

Section 18.13 describes the information collection requirements of the rule. A comment suggested that 40 hours for preparing a large lease proposals seems low. NPS notes that the time estimates are averages only.

Drafting Information

The primary authors of this rule are the members of a task force comprised of NPS officials involved in the leasing of national park system properties.

Compliance With Laws, Executive Orders and Departmental Policy

Regulatory Planning and Review (E.O. 12866)

This rule is a significant rule within the meaning of Executive Order 12866 because of novel policy issues.

a. This rule will not have an annual economic effect of $100 million or more or adversely affect an economic sector, productivity, jobs, the environment or other units of government. The rule imposes no obligations on any entity except for persons that may seek to be awarded an NPS lease. It does not apply to existing NPS leases.

b. This rule will not create inconsistencies with other agencies' actions as it only applies to the National Park Service.

c. This rule will not materially affect entitlements, grants, user fees, loan programs, or the rights and obligations of their recipients. The rule only prescribes policies and procedures for leasing lands of the national park system.

d. This rule raises novel policy issues as it prescribes new policies and procedures for leasing lands of the national park system in accordance with the requirements of Section 802 of Public Law 105–319 and 16 U.S.C. 470h–3.

Regulatory Flexibility Act

This rule is not subject to the Regulatory Flexibility Act as it is not required to be published for comment before adoption by 5 U.S.C. 553 or other law. NPS solicited public comment on this proposed rule as a matter of policy. The Department of the Interior also considers that the final rule will not have a significant effect on a substantial number of small entities as defined under the Regulatory Flexibility Act (5 U.S.C 601 *et seq.*). NPS anticipates that less than one hundred leases a year will be awarded under this authority. In addition, the rule is only applicable to prospective lessees. It has no effect on existing NPS leases.

Small Business Regulatory Enforcement Fairness Act

This rule is not a major rule under 5 U.S.C. 804(2), the Small Business Regulatory Fairness Enforcement Act. This rule does not have an annual effect on the economy of $100 million or more; will not cause a major increase in costs or prices for consumers, individual entities, Federal, State, or local government agencies, or geographic regions; and does not have significant adverse effects on competition, employment, investment, productivity, innovation, or the ability of U.S.-based enterprises to compete with foreign-based enterprises. The primary effect of the proposed rule is to establish policies and procedures for the granting of leases of certain property located within areas of the national park system. Potential lessees will only submit lease proposals if the effects are positive.

Takings (E.O. 12630)

In accordance with Executive Order 12630, this rule does not have significant takings implications as this rule does not apply to private property. A takings assessment is not required.

Federalism (E.O. 13132)

In accordance with Executive Order 13132, this rule does not have sufficient federalism implications to warrant the preparation of a federalism assessment. The rule imposes no requirements on any governmental entity other than NPS.

Civil Justice Reform (E.O. 12988)

In accordance with Executive Order 12988, the Office of the Solicitor has determined that this rule does not unduly burden the judicial system and does not meet the requirements of sections 3(a) and 3(b)(2) of the Order.

Paperwork Reduction Act

This rule (NPS Leasing Regulations—36 CFR part 18) requires an information collection from ten or more parties so a submission under the Paperwork Reduction Act was required. OMB has approved the information collection requirements of this part. OMB Control No. 1024–0223, expiration date 01/31/2004. The information collection requirements of this rule are for the purpose of awarding and administering NPS leases. A federal agency may not conduct or sponsor, and a person is not required to respond to, a collection of information unless it displays a currently valid OMB control number.

Six categories of information collection are contained in the rule: Section 18.7 (Request for Bids); Section 18.8 (Requests for Qualifications/Proposals); Section 18.12(c) (Subletting and Assignment of Leases); Section 18.12(i)–(j) (Approval of Lessee Construction/Demolition); Section 18.12(l) (Approval of Lessee Encumbrances); and Section 18.12(k) (Amendment of Leases). NPS will use the information collected to make administrative decisions with respect to these six categories. The respondents to these collections will be NPS lessees and prospective NPS lessees. NPS anticipates that there will be a total of approximately six hundred respondents per year with respect to Sections 18.7 and 18.8 and a total of approximately twenty-seven respondents per year with respect to the other information collection categories. NPS estimates that the total annual reporting and recordkeeping burden that will result from these collections of information will be 4392 hours, as set forth in the following chart.

Section	Number of responses	Hours per response	Total hours
Section 18.7	200	1	200
Section 18.8—Complex	20	40	800
Section 18.8—Simple	380	8	3040
Section 18.12(c)—Complex	1	40	40
Section 18.12(c)—Simple	4	8	32
Section 18.12(i)–(j)—Complex	2	32	64
Section 18.12(i)–(j)—Simple	8	8	64

Section	Number of responses	Hours per response	Total hours
Section 18.12(k)	2	4	8
Section 18.12(l)—Complex	2	40	80
Section 18.12(l)—Simple	8	8	64
Total	627	7.0	4392

*(average)

Please send comments regarding this burden or estimate or any other aspect of this collection of information, including suggestions for reducing the burden, to the Desk Officer for the Interior Department, Office of Information and Regulatory Affairs, Office of Management and Budget, Washington, DC 20503 (with a copy to the Information Collection Officer, National Park Service, 1849 C Street, Washington, DC 20240. information technology).

National Environmental Policy Act

This rule does not constitute a major federal action affecting the quality of the human environment. A detailed statement under the National Environment Policy Act is not required. The rule will not increase public use of park areas, introduce noncompatible uses into park areas, conflict with adjacent land ownerships or land uses, or cause a nuisance to property owners or occupants adjacent to park areas. Accordingly, this rule is categorically excluded from procedural requirements of the National Environmental Policy Act by 516 DM 6, App. 7.4A(10).

Clarity of this Rule

Executive Order 12866 requires federal agencies to write regulations that are easy to understand. Comment is invited on how to make this rule easier to understand, including answers to the following questions: (1) Are the requirements in the rule clearly stated?; (2) Does the rule contain undefined technical language or jargon that interferes with its clarity?; (3) Does the format of the rule (groupings and order of sections, use of headings, paragraphing, etc.) aid in or reduce its clarity?; (4) Would the rule be easier to understand if it were divided into more but shorter sections?; (5) Is the description of the rule in the **SUPPLEMENTARY INFORMATION** section of the preamble helpful in understanding the proposed rule?; (6) What else could be done to make the rule easier to understand? Please send a copy of any comments that concern how this rule could be made easier to understand to: Office of Regulatory Affairs, Department of the Interior, Room 7229, 1849 C Street NW, Washington, DC 20240.

List of Subjects in 36 CFR Part 18

Historic preservation, National parks.

In consideration of the foregoing, 36 CFR part 18 is revised to read as follows:

PART 18—LEASING OF PROPERTIES IN PARK AREAS

Sec.

18.1 What is the authority and purpose for this part?
18.2 What definitions do you need to know to understand this part?
18.3 What property may be leased?
18.4 What determinations must the Director make before leasing property?
18.5 May property be leased without receiving fair market value rent?
18.6 Are there limitations on the use of property leased under this part?
18.7 How are lease proposals solicited and selected if the Director issues a Request for Bids?
18.8 How are lease proposals solicited and selected if the Director issues a Request for Proposals?
18.9 When may the Director lease property without issuing a request for bids or a request for proposals?
18.10 How long can the term of a lease be?
18.11 What general provisions must a lease contain?
18.12 What specific provisions must a lease contain?

Authority: 16 U.S.C. 1 *et seq.*, particularly 16 U.S.C. 1a–2(k), and, 16 U.S.C. 470h–3.

§ 18.1 What is the authority and purpose for this part?

16 U.S.C. 1 *et seq.*, particularly 16 U.S.C. 1a–2(k), and, 16 U.S.C. 470h–3 are the authorities for this part. These authorities allow the Director (or delegated officials) to lease certain federally owned or administered property located within the boundaries of park areas. All leases to be entered into by the Director under these authorities are subject to the requirements of this part, except that, proposed leases that were solicited pursuant to this part prior to January 28, 2002, may be executed in accordance with the terms of the solicitation.

§ 18.2 What definitions do you need to know to understand this part?

In addition to the definitions contained in 36 CFR Part 1, the following definitions apply to this part:

(a) *Associated property* means land and/or structures (e.g., parking lots, retaining walls, walkways, infrastructure facilities, farm fields) related to a building or buildings and their functional use and occupancy.

(b) *Building* means an enclosed structure located within the boundaries of a park area and constructed with walls and a roof to serve a residential, industrial, commercial, agricultural or other human use.

(c) *Commercial use authorization* means a written authorization to provide services to park area visitors issued by the Director pursuant to Section 418 of Public Law 105–391 and implementing regulations.

(d) *Concession contract* has the meaning stated in 36 CFR part 51.

(e) *Fair market value rent* means the most probable rent, as of a specific date, in cash or in terms equivalent to cash, for which the property to be leased, under the terms and conditions of the lease, should rent for its highest and best permitted use after reasonable exposure in a competitive market under all conditions requisite to a fair leasing opportunity, with the lessor and the lessee each acting prudently, knowledgeably, and for self-interest, and assuming that neither is under undue duress. Determinations of fair market value rent under this part are to be made taking into account the considerations stated in § 18.5.

(f) *Historic building* means a building or buildings located within the boundaries of a park area if the building is part of a pre-historic or historic district or site included on, or eligible for inclusion on, the National Register of Historic Places.

(g) *Historic land* means land located within the boundaries of an historic property.

(h) *Historic property* means building(s) and land located within the boundaries of a park area if the building(s) and land are part of a pre-historic or historic district or site

included on, or eligible for inclusion on, the National Register of Historic Places.

(i) *Land* means unimproved real property.

(j) *Lease* means a written contract entered into under the authority of this part through which use and possession of property is granted to a person for a specified period of time.

(k) *Non-historic building* is a building (or buildings) and its associated property located within the boundaries of a park area but not part of a pre-historic or historic district or site included on, or eligible for inclusion on, the National Register of Historic Places.

(l) *Non-historic land* means land located within the boundaries of a park area that is not associated property and is not part of a pre-historic or historic district or site included on, or eligible for inclusion on, the National Register of Historic Places.

(m) *Non-historic property* means building(s) and/or land that are located within the boundaries of a park area but are not part of a pre-historic or historic district or site included on, or eligible for inclusion on, the National Register of Historic Places.

(n) *Park area* means a unit of the national park system.

(o) *Property* means both historic and non-historic property that is located within the boundaries of a park area and is federally owned or administered.

(p) *Request* for bids refers to the lease bid process described in § 18.7.

(q) *Request for proposals* refers to the lease proposal process described in § 18.8.

(r) *Responsive bid or proposal* means a timely submitted bid or proposal that meets the material requirements of a request for bids or a request for proposals.

§ 18.3 What property may be leased?

(a) In general. The Director may lease any property (except non-historic land) under this part if the Director makes the determinations required by § 18.4.

(b) Non-historic land. Non-historic land may not be leased under this part. Certain non-historic land is eligible for leasing under 36 CFR part 17.

§ 18.4 What determinations must the Director make before leasing property?

Before leasing property in a park area under this part, the Director must determine that:

(a) The lease will not result in degradation of the purposes and values of the park area;

(b) The lease will not deprive the park area of property necessary for appropriate park protection, interpretation, visitor enjoyment, or administration of the park area;

(c) The lease contains such terms and conditions as will assure the leased property will be used for activity and in a manner that are consistent with the purposes established by law for the park area in which the property is located;

(d) The lease is compatible with the programs of the National Park Service;

(e) The lease is for rent at least equal to the fair market value rent of the leased property as described in § 18.5;

(f) The proposed activities under the lease are not subject to authorization through a concession contract, commercial use authorization or similar instrument; and

(g) If the lease is to include historic property, the lease will adequately insure the preservation of the historic property.

§ 18.5 May property be leased without receiving fair market value rent?

Property may be leased under this part only if the lease requires payment of rent to the government equal to or higher than the property's fair market value rent. The determination of fair market value rent shall take into account:

(a) Any restrictions on the use of the property or terms of the lease that limit the value and/or the highest and best use of the property; and

(b) Any requirements under the lease for the lessee to restore, rehabilitate or otherwise improve the leased property.

§ 18.6 Are there limitations on the use of property leased under this part?

(a) A lease issued under this part may authorize the use of the leased property for any lawful purpose, subject to the determinations required by § 18.4 and the limitations on activities set forth in paragraph (b) of this section.

(b) Unless otherwise authorized by law, a lease issued under this part may not authorize the lessee to engage in activities that are subject to authorization through a concession contract, commercial use authorization or similar instrument. Proposed lease activities are subject to authorization under a concession contract if the Director determines in accordance with 36 CFR part 51 and park area planning documents and related guidelines and policies that the proposed activities meet applicable requirements for issuance of a concession contract. Proposed activities are subject to authorization under a commercial use authorization if the Director determines in accordance with park area planning documents and related guidelines and policies that the proposed activities meet applicable requirements for issuance of a commercial use authorization.

§ 18.7 How are lease proposals solicited and selected if the Director issues a Request for Bids?

(a) If the amount of the rent is the only criterion for award of a lease, the Director may solicit bids through issuance of a request for bids as described in this section. If historic property is to be leased under the authority of this section, the Director must comply with 36 CFR part 800 (commenting procedures of the Advisory Council on Historic Preservation) at an appropriate time during the leasing process.

(b) A request for bids under this section shall be advertised by public notice published at least twice in local and/or national newspapers of general circulation. The notice shall provide at least a thirty (30) day period from the last date of publication for the submission of sealed bids. The notice will provide necessary information to prospective bidders. It may specify a minimum rent and/or require submission of a rent deposit or advance rent payment. Bids will be considered only if timely received at the place designated in the request. Bids must be in the form specified by the Director, or, if no form is specified, a bid must be in writing, signed by the bidder or authorized representative, state the amount of the bid, and refer to the applicable public notice. If the notice requires submission of a rent deposit or advance rent payment, the bids must include the required funds in the form of a certified check, post office money order, bank drafts, or cashier's checks made out to the United States of America. The bid (and payment where applicable) must be enclosed in a sealed envelope upon which the bidder shall write: ''Bid on lease of property of the National Park Service'' and shall note the date the bids are to be opened.

(c) Bids will be opened publicly by the Director at a time and place specified in the public notice. Bidders or their representatives may attend the bid opening. The bidder submitting a responsive bid offering the highest rent will be selected for award of the lease (subject to a determination of financial capability by the Director). A responsive bid is a bid that meets the material terms and conditions of the request for bids. The Director shall accept no bid in an amount less than the fair market rental value as determined by the Director. If two or more bids are equal, a drawing shall make the lease award by lot limited to the equal responsive bids received.

(d) When a property is to be leased through a request for bids, the bidder that is declared by the Director to be the

high bidder shall be bound by his bid and this part to execute the offered lease, unless the bid is rejected. If the declared high bidder fails to enter into the lease for any reason, the Director may choose to enter into the lease with the next highest bidder (if that bidder offered to pay at least the fair market rent value). The Director may reject any and all bids in his discretion and resolicit or cancel a lease solicitation under this part at any time without liability to any person.

§ 18.8 How are lease proposals solicited and selected if the Director issues a Request for Proposals?

(a) When the award of a lease is to be based on selection criteria in addition to or other than the amount of the rent, the Director must, subject to § 18.9, solicit proposals for the lease through issuance of a public Request for Proposals (RFP).

(b) An RFP may be preceded by issuance of a public Request for Qualifications (RFQ). The purpose of an RFQ is to select a ''short list'' of potential offerors that meet minimum management, financial and other qualifications necessary for submission of a proposal in response to an RFP. If the Director issues an RFQ, only persons determined as qualified by the Director under the terms of the RFQ shall be eligible to submit a proposal under the related RFP.

(c) The Director must provide public notice of the leasing opportunity by publication at least twice in local and/or national newspapers of general circulation and/or through publication in the Commerce Business Daily. The public notice shall contain general information about the leasing opportunity and advise interested persons how to obtain a copy of the RFP (or RFQ where applicable). The RFP (and RFQ where applicable) shall contain appropriate information about the property proposed for lease, including limitations on the uses of the property to be leased, information concerning the leasing process, information and materials that must be contained in a proposal, the time and place for submission of proposals, terms and conditions of the lease, and the criteria under which the Director will evaluate proposals. The RFP may state the fair market value rent as the minimum acceptable rent if determined by the Director at that time. The RFP (and RFQ where applicable) must allow at least sixty (60) days for submission of proposals (or qualifications under an RFQ) unless a shorter period of time is determined to be sufficient in the circumstances of a particular solicitation.

(d) The Director may determine that a proposal is non-responsive and not consider it further. A non-responsive proposal is a proposal that was not timely submitted or fails to meet the material terms and conditions of the RFP. After the submission of offers and prior to the selection of the best overall proposal, the Director may request from any offeror additional information or written clarification of a proposal, provided that proposals may not be amended after the submission date unless all offerors that submitted responsive proposals are given an opportunity to amend their proposals. The Director may choose to reject all proposals received at any time and resolicit or cancel a solicitation under this part without liability to any person.

(e) (1) The criteria to be used in selection of the best proposal are:

(i) The compatibility of the proposal's intended use of the leased property with respect to preservation, protection, and visitor enjoyment of the park;

(ii) The financial capability of the offeror to carry out the terms of the lease;

(iii) The experience of the offeror demonstrating the managerial capability to carry out the terms of the lease;

(iv) The ability and commitment of the offeror to conduct its activities in the park area in an environmentally enhancing manner through, among other programs and actions, energy conservation, waste reduction, and recycling; and

(v) Any other criteria the RFP may specify.

(2) If the property to be leased is an historic property, the compatibility of the proposal with the historic qualities of the property shall be an additional selection criterion. If the RFP requires proposals to include the amount of rent offered, the amount of rent offered also shall be an additional selection criterion.

(f) The Director will evaluate all responsive proposals received. The responsive proposal determined by the Director to best meet on an overall basis the evaluation criteria will be selected for negotiation of the lease. If two or more responsive proposals are determined by the Director to be substantially equal under the evaluation criteria, the Director shall provide an opportunity for those proposals to be amended by their offerors as necessary for the Director to select the best amended proposal. In such circumstances, the Director will provide each offeror that submitted a substantially equal proposal appropriate information as to how their proposals may be amended in order to enhance the possibility of selection as the best amended proposal. If two or more proposals remain as substantially equal after amendment, the Director will select for negotiation of the lease from among these proposals the proposal that the Director determines on an overall basis will be most beneficial to effective management of the park area.

(g) The Director will provide the offeror that submitted the best overall responsive proposal as determined by the Director a specified period of time to negotiate the final terms of the lease (and may enter into a letter of intent to negotiate in this connection). The final terms of the lease must be consistent with the requirements of the RFP. If the negotiations do not result in an executed lease within the specified time period, the Director, in his discretion, may extend the negotiation period, terminate negotiations and negotiate with the offeror that submitted the next best responsive proposal, or, cancel the solicitation.

(h) RFPs may state that the amount of rent to be paid will be negotiated subsequently with the offeror that submitted the best proposal, initially or as amended. The Director may execute a lease only if the Director determines that it requires the lessee to pay at least the fair market value rent of the leased property.

(i) The Director may execute a lease that includes historic property only after complying with 36 CFR part 800 (commenting procedures of the Advisory Council on Historic Preservation).

§ 18.9 When may the Director lease property without issuing a request for bids or a request for proposals?

The Director, except as provided in this section, may not lease property without issuing a request for bids or a request for proposals in compliance with § 18.7 or § 18.8. The Director under this part may enter into leases with non-profit organizations (recognized as such by the Internal Revenue Service) or units of government without complying with § § 18.7 or 18.8 if the Director determines that the non-profit or governmental use of the property will contribute to the purposes and programs of the park area. All other requirements of this part are applicable to leases entered into or to be entered into under authority of this section. The Director may enter into leases under this part with a term of sixty (60) days or less without complying with § § 18.7 or 18.8 if the Director determines that to do so is in the best interests of the administration of the park area. If historic land is to be leased under the

authority of this section, the Director must comply with 36 CFR part 800 (commenting procedures of the Advisory Council on Historic Preservation) before entering into the lease.

§ 18.10 How long can the term of a lease be?

All leases entered into under this part shall have as short a term as possible, taking into account the financial obligations of the lessee and other factors related to determining an appropriate lease term. No lease shall have a term of more than 60 years. Leases entered under the authority of this part may not be extended, except that, leases with an initial term of one (1) year or more may be extended once for a period not to exceed one (1) additional year if the Director determines that an extension is necessary because of circumstances beyond the Director's control.

§ 18.11 What general provisions must a lease contain?

All leases entered into under this part must contain terms and conditions that are determined necessary by the Director to assure use of the leased property in a manner consistent with the purposes of the applicable park area as established by law, and where applicable, to assure the preservation of historic property.

§ 18.12 What specific provisions must a lease contain?

All leases entered into under this part must contain:

(a) A termination for cause or default provision;

(b) Appropriate provisions requiring the lessee to maintain the leased property in good condition throughout the term of the lease;

(c) Appropriate provisions stating that subletting of a portion of the leased property and assignment of a lease, if permissible under the terms of the lease, must be subject to the Director's written approval. Such subleases and assignments shall be approved only of the Director determines, among other relevant matters, that the proposed sub-lessee or assignee is financially and managerially capable of carrying out the terms of the lease. Assignment of a lease for the purpose of effectuating an encumbrance to the lease or the leased property is subject to approval pursuant to the requirements of paragraph (l) of this section;

(d) Appropriate provisions requiring the lessee to secure and maintain from responsible companies liability insurance sufficient to cover losses connected with or occasioned by the use and activities authorized by the lease. Types and amounts of insurance coverage will be specified in writing and periodically reviewed by the Director;

(e) Appropriate provisions, unless the Director determines otherwise in the circumstances of a particular lease, requiring the lessee to obtain from responsible companies casualty insurance (including flood insurance if applicable) in an amount sufficient to protect the interests of the lessee and the government. In the event of casualty, the lessee shall be required to repair or replace damaged or destroyed property unless otherwise determined by the Director;

(f) Appropriate provisions requiring the lessee to save, hold harmless, and indemnify the United States of America and its agents and employees for all losses, damages, or judgments and expenses resulting from personal injury, death or property damage of any nature arising out of the lessee's activities under the lease, and/or the activities of the lessee's employees, subcontractors, sub-lessees, or agents. No lease entered into this part may contain provisions intended to provide indemnification or other assurances to the lessee regarding the conduct or activities of the Director concerning the lease or the administration of the applicable park area. Leases may contain appropriate provisions that commit the Director to accept responsibility for tortious actions of government officials to the extent authorized by the Federal Torts Claim Act or as otherwise expressly authorized by law;

(g) Appropriate provisions requiring the lessee to pay for use of all utilities used by the lessee and to pay all taxes and assessments imposed by federal, state, or local agencies applicable to the leased property or to lessee activities;

(h) Appropriate provisions stating that the lessee has no rights of renewal of the lease or to the award of a new lease upon lease termination or expiration and that the lease is subject to cancellation by the Director in the exercise of the sovereign authority of the United States to the extent provided by applicable law;

(i) Appropriate provisions stating that the lessee may not construct new buildings or structures on leased property, provided that, a lease may contain appropriate provisions that authorize the lessee to construct, subject to the prior written approval of the Director, minor additions, buildings and/or structures determined by the Director to be necessary for support of the authorized activities of the lessee and otherwise to be consistent with the protection and purposes of the park area. Approval by the Director of new construction may only be granted if the Director makes the determinations required by § 18.4;

(j) Appropriate provisions requiring that:

(1) Any improvements to or demolition of leased property to be made by the lessee may be undertaken only with written approval from the Director;

(2) That any improvements to or demolition of historic property may only be approved if the Director determines that the improvements or demolition complies with the Secretary of the Interior's Standards for the Treatment of Historic Properties (36 CFR part 68); and

(3) Any improvements made by a lessee shall be the property of the United States;

(k) Appropriate provisions that describe and limit the type of activities that may be conducted by the lessee on the leased property. The types of activities described in a lease may be modified from time to time with the approval of the Director through an amendment to the lease. The Director may approve modified activities only if the determinations required by § 18.4 remain valid under the proposed modified activities and the proposed activities are otherwise determined appropriate by the Director;

(l) Appropriate provisions, unless the Director determines not to permit pledges or encumbrances in the circumstances of a particular lease, authorizing the lessee to pledge or encumber the lease as security, provided that any pledge or encumbrance of the lease and the proposed holder of the pledge or encumbrance must be approved in writing in advance by the Director and that a pledge or encumbrance may only grant the holder the right, in the event of a foreclosure, to assume the responsibilities of the lessee under the lease or to select a new lessee subject to the approval of the Director. Pledges or encumbrances may not grant the holder the right to alter or amend in any manner the terms of the lease;

(m) Appropriate provisions stating that fulfillment of any obligations of the government under the lease is subject to the availability of appropriated funds. No lease issued under authority of this part shall entitle the lessee to claim benefits under the Uniform Relocation Assistance Act of 1970 (Public Law 91–646) and all leases entered into under the authority of this part shall require the lessee to waive any such benefits; and

(n) Appropriate provisions granting the Director and the Comptroller General access to the records of the lessee as necessary for lease administration purposes and/or as provided by applicable law.

Dated: July 19, 2001.

Joseph E. Doddridge,

Acting Assistant Secretary for, Fish and Wildlife and Parks.

[FR Doc. 01–31201 Filed 12–26–01; 8:45 am]

BILLING CODE 4310–70–P

DEPARTMENT OF VETERANS AFFAIRS

38 CFR Chapter 1, Part 3

RIN 2900–AK65

Filipino Veterans' Benefits Improvements

AGENCY: Department of Veterans Affairs.

ACTION: Interim final rule.

SUMMARY: This document amends Department of Veterans Affairs (VA) adjudication regulations to reflect changes made by the Departments of Veterans Affairs and Housing and Urban Development, and Independent Agencies Appropriations Act, 2001, which changed the rate of compensation payments to certain Filipino veterans residing in the United States and the Veterans Benefits and Health Care Improvement Act of 2000, which changed the amount of the burial benefit paid to the survivors of certain Filipino veterans who were residing in the United States at the times of their deaths.

DATES: *Effective Date:* December 27, 2001.

Applicability Dates: The provisions of this interim final rule regarding compensation benefits, 38 CFR 3.42, 38 CFR 3.405, and 38 CFR 3.505, apply beginning October 27, 2000. The provision of this interim final rule regarding burial benefits, 38 CFR 3.43, applies when the veteran has died after November 1, 2000.

Comment Date: Comments must be received by VA on or before February 25, 2002.

ADDRESSES: Mail or hand-deliver written comments to: Director, Office of Regulations Management (02D), Department of Veterans Affairs, 810 Vermont Ave., NW, Room 1154, Washington, DC 20420; or fax comments to (202) 273–9289; or e-mail comments to *OGCRegulations@mail.va.gov.* Comments should indicate that they are submitted in response to ''RIN 2900–AK65.'' All comments received will be available for public inspection in the Office of Regulations Management, Room 1158, between the hours of 8:00 a.m. and 4:30 p.m., Monday through Friday (except holidays).

FOR FURTHER INFORMATION CONTACT: Bill Russo, Regulations Staff, Compensation and Pension Service (211A), Veterans Benefits Administration, Department of Veterans Affairs, 810 Vermont Avenue, NW, Washington, DC 20420, telephone (202) 273–7211.

SUPPLEMENTARY INFORMATION: The Philippine Islands achieved independence from the United States in 1946. The Philippines was still a commonwealth of the United States when America entered World War II, and President Roosevelt ordered many Filipinos into service. In the years that followed, a variety of VA benefits were provided to Filipinos based on service in different military units. One long-standing provision, 38 U.S.C. 107, gave certain Filipino veterans certain VA benefits at half the rate paid to United States veterans.

I. Compensation Benefits

On October 27, 2000, the President signed into law the Departments of Veterans Affairs and Housing and Urban Development, and Independent Agencies Appropriations Act, 2001, Pub. L. 106–377, 114 Stat. 1441. Section 501 of Pub. L. 106–377 amended 38 U.S.C. 107 to provide full-rate payments of benefits for Filipino veterans who had ''[s]ervice before July 1, 1946, in the organized military forces of the Government of the Commonwealth of the Philippines, while such forces were in the service of the Armed Forces of the United States under the military order of the President dated July 26, 1941, including among such military forces organized guerrilla forces under commanders appointed, designated, or subsequently recognized by the Commander in Chief, Southwest Pacific Area, or other competent authority in the Army of the United States. * * *'' In order to be entitled to full-dollar rate benefits, Pub. L. 106–377 requires that the veteran be ''residing in the United States'' and also be either a U.S. citizen or an alien lawfully admitted for permanent residence in the U.S. To implement this new law, this document adds new §§ 3.42 and 3.43 to 38 CFR, redesignates §§ 3.8 and 3.9 as §§ 3.40 and 3.41, respectively, and amends § 3.40.

Legislative Intent

By increasing compensation to Filipino veterans residing in the U.S., Congress indicated its recognition that Filipino veterans residing in the U.S. have a higher cost of living than Filipino veterans living in the Philippines. However, Congress did not intend to create a windfall for Filipino veterans who do not actually face the higher cost of living in the U.S. In order to avoid that potential result, Congress required that Filipino veterans be residing in the U.S. and either be citizens of the U.S. or aliens lawfully admitted for permanent residence in the U.S.

Definitions

Although Congress did not define the term ''residing in the United States'' in Pub. L. 106–377, we believe Congress intended that VA pay Filipino veterans the full-dollar rate for compensation only while they are actually residing in the U.S. We are therefore defining the term to require that the veteran's principal, actual dwelling place must be in the U.S. We have used simple, objective criteria for determining whether a veteran meets that definition: requiring that the veteran be present in the U.S. for at least the majority of each calendar year, beginning with the calendar year in which he or she applies for the full-dollar rate, and continuing in each year in which the veteran receives full-dollar rate benefits; and that the veteran not be absent from the U.S. for more than 60 consecutive days. If a veteran is absent from the U.S. for longer than these periods, it is reasonable to conclude that he or she is not residing in the U.S. In addition, this definition will be understandable to veterans and readily applied by VA employees. This rule will also allow veterans reasonable periods to travel outside of the U.S. for business or personal reasons without having their benefits reduced.

Congress did not define ''United States'' in Pub. L. 106–377, but we believe that Congress intended to more adequately compensate Filipino veterans for the cost-of-living in the states, territories and possessions of the United States, the District of Columbia, and the Commonwealth of Puerto Rico. Therefore, this rule specifically references the states, territories and possessions of the United States, the District of Columbia, and the Commonwealth of Puerto Rico.

Congress did not define the terms ''citizen'' of the U.S. and ''lawfully admitted for permanent residence'' in Pub. L. 106–377. However, these terms are well defined by existing federal immigration and naturalization laws found in title 8, United States Code, and we believe that Congress intended for the terms to have the same meaning.

Therefore, we are defining ''citizen'' of the U.S. to mean any individual who acquires U.S. citizenship through birth in the territorial U.S., birth abroad as provided under title 8, United States Code, or through naturalization, and has not renounced his or her U.S. citizenship, or had such citizenship cancelled, revoked, or otherwise terminated. We are defining ''lawfully admitted for permanent residence'' to mean lawfully accorded the privilege of residing permanently in the United States as an immigrant in accordance with title 8, United States Code, such status not having changed.

Evidence of Eligibility

VA has an obligation to ensure that veterans receiving full-dollar rate benefits meet the residency and citizenship/permanent-resident-alien requirements in the law. As proof that the veteran is residing in the U.S., this rule requires satisfactory evidence (which may include, for example, a driver's license, lease agreement, or utility bills) that he or she is residing at a valid street address in the U.S. and receiving mail at that address. Furthermore, this rule provides that VA will not pay benefits at the full rate if the veteran's mailing address is a Post Office box, unless evidence from the U.S. Postal Service shows that it does not deliver mail to the veteran's street address. We believe these provisions will help ensure program integrity and reduce the possibility of fraud.

This rule states that a valid original or copy of one of the following documents is required to prove that a veteran is a natural born citizen of the U.S.:

A valid U.S. passport;

- A birth certificate showing that he or she was born in the U.S.; or
- A Report of Birth Abroad of a Citizen of the U.S. issued by a U.S. consulate abroad.

We believe this is a reasonable requirement, since these documents are standardized, reliable means of proving an individual's U.S. citizenship. A U.S. passport is issued only to individuals who have provided acceptable proof of U.S. citizenship to the U.S. Department of State. One of the latter two documents listed above are generally issued at birth.

The U.S. Immigration and Naturalization Service (INS) is the federal agency responsible for granting naturalized citizen status and keeping records on such status. Therefore, this rule states that only verification of that status by INS to VA will be sufficient proof for purposes of eligibility for full-dollar rate benefits.

INS documents all aliens who receive permanent-resident-alien status in the U.S. Therefore, this rule requires that, in order to establish status as a permanent resident alien for purposes of receiving compensation at the full-dollar rate, only verification of that status by INS to VA will be sufficient proof for purposes of eligibility for full-dollar rate benefits.

Continued Eligibility

We believe that Congress intended that Filipino veterans receive an increased rate of benefit payment due to the relatively high cost-of-living in the U.S., if the U.S. is their principal, actual dwelling place. Therefore, we believe it is reasonable to establish limits on how long a veteran may be absent from the U.S. but yet continue to receive benefits at the full-dollar rate. Under this rule, in order to continue receiving benefits at the full-dollar rate under this section, a veteran must be physically present in the U.S. for at least 183 days of each calendar year in which he or she receives payments at the full-dollar rate, and may not be absent from the U.S. for more than 60 consecutive days at a time. If a veteran is absent from the U.S. for longer than these periods, it is reasonable to conclude that the U.S. is not his or her principal, actual dwelling place. However, if a veteran becomes eligible for full-dollar rate benefits on an initial basis, on or after July 1 of any calendar year, the 183-day rule will not apply during that calendar year. Further, VA will not consider a veteran to have been absent from the U.S. if he or she left and returned to the U.S. on the same date. To ensure program integrity, we have included in this rule a requirement that a veteran receiving full-dollar rate benefits must notify VA within 30 days of leaving the U.S.

Also to ensure program integrity, we are requiring that a Filipino veteran receiving benefits at the full-dollar rate must notify VA within 30 days if he or she loses his or her U.S. citizenship or lawful-permanent-resident-alien status. This rule also states that, when a veteran no longer meets the citizenship/permanent-resident-alien eligibility requirements, VA will reduce his or her payment to the rate of $0.50 for each dollar authorized under the law.

These requirements will be understandable to veterans and readily applied by VA employees. This rule will also allow veterans reasonable periods to travel outside of the U.S. for business or personal reasons without having their benefits reduced.

In addition, this rule states that a veteran receiving full-dollar rate benefits must provide VA with satisfactory evidence that he or she continues to meet the residency and citizenship/naturalization requirements, whenever VA requests such evidence. This rule incorporates 38 CFR 3.652, which contains VA's procedure for requesting proof of continued eligibility and reducing a benefits award if it is not submitted in a timely manner. Section 3.652 states that VA beneficiaries must provide VA with proof, when requested, that any or all of the eligibility factors which established entitlement continue to exist. This rule specifically restates that requirement and the requirement that VA advise the veteran at the time of the request that the proof must be furnished within 60 days and that failure to do so will result in the reduction of benefits under § 3.652. We believe these concepts from § 3.652 are fair, reasonable and efficient.

To further ensure program integrity, a veteran receiving benefits at the full-dollar rate under this section must notify VA promptly if the veteran changes his or her address. For the same reason, if mail from VA to the veteran is returned as undeliverable, VA will attempt to verify a more current address. If this attempt at verification proves unsuccessful, VA will reduce his or her payment to the rate of $0.50 for each dollar authorized under law. We believe this is necessary, since such returned mail may indicate that the veteran no longer resides at the address that was the basis for his or her entitlement to the full-dollar rate benefits.

Effective dates for initial eligibility

We are adding a new § 3.405 containing the effective date rules for the full-dollar rate benefit. Section 501(a) of Pub. L. 106–377 states that the amendments allowing full-dollar rate benefits for certain Filipino veterans ''shall take effect on the date of the enactment of this Act and shall apply to benefits paid for months beginning on or after that date.'' In order to be consistent with congressional intent, for veterans who met the eligibility requirements in § 3.42 on October 27, 2000, and maintained such eligibility continuously from that date to the date of an administrative determination of entitlement, the effective date of awards of compensation at the full-dollar rate will be October 27, 2000. For all other veterans, awards of compensation for Filipino veterans under § 3.42 will be effective on the latest of the following dates, which are consistent with existing effective date rules:

- Date entitlement arose;
- Date on which the veteran first met the residency and citizenship/permanent-resident-alien status requirements in § 3.42, if VA receives

evidence of this within 1 year of that date;

• Effective date of the rating establishing service connection, provided VA receives evidence that the veteran meets the residency and citizenship/permanent-resident-alien status requirements in § 3.42 within 1 year of notification of such rating action.

• Date the veteran returned to the U.S. after absence of more than 60 consecutive days.

• First day of the year following the year in which the veteran was absent from the U.S. for a total of 183 days or more, or the first day after that date that the veteran returns to the U.S.

Effective dates for reductions

As stated above, Pub. L. 106–377 does not address the issue of effective dates for the new full-dollar rate payments, so we will apply existing effective date regulations. We believe this is consistent with congressional intent, and that application of existing rules will avoid unnecessarily complicating the adjudication process.

This rule also gives VA authority to verify continued eligibility for full-dollar rate payments. If VA requests information for this purpose, and the veteran does not provide it within 60 days, the eligibility factor(s) for which certification was requested will, pursuant to § 3.652(a), be considered to have ceased to exist as of the end of the month in which it was last shown by the evidence of record to have existed. Under § 3.652(b), if the required certification is submitted to VA after benefits have been reduced, the benefits will be adjusted in accordance with the facts found. We believe the general rules provided in § 3.652 are fair and easy to administer. Accordingly, we will rely on them in cases of increased rate payments under Pub. L. 106–377; this rule provides that reductions for failure to verify continued eligibility will be as provided in § 3.652.

Under this rule, when a veteran no longer meets the residence or citizenship/permanent-resident-alien eligibility requirements of Pub. L. 106–377, VA will reduce his or her payment to the rate of $0.50 for each dollar authorized under the law, effective on the date determined under new § 3.505, discussed below. The rule also states that, if mail from VA to the veteran is returned as undeliverable, VA will reduce his or her payment to the rate of $0.50 for each dollar authorized under law, effective on the date determined under § 3.505.

We are adding a new § 3.505 to state that if a veteran receiving benefits at the full-dollar rate under § 3.42 is physically absent from the U.S. for a total of 183 days or more during any calendar year, VA will reduce the payment of any compensation to the rate of $0.50 for each dollar authorized under the law, effective on the 183rd day of absence from the U.S. In addition, it states that, if a veteran receiving benefits at the full-dollar rate under § 3.42 is physically absent from the U.S. for more than 60 consecutive days, VA will reduce his or her compensation to the rate of $0.50 for each dollar authorized under the law, effective on the 61st day of the absence. It further states that a veteran receiving benefits at the full-dollar rate under § 3.42 loses either U.S. citizenship or status as an alien lawfully admitted for permanent residence in the U.S., VA will reduce the compensation to the rate of $0.50 for each dollar authorized under the law, effective on the day he or she no longer satisfies one of these criteria. Finally, it also states that if mail to a veteran receiving benefits at the full-dollar rate under § 3.42 is returned to VA as undeliverable, VA will reduce his or her payment to the rate of $0.50 for each dollar authorized under law, effective on the date of the last payment of compensation benefits.

Effective dates for restored eligibility

Under this rule, if a veteran who stopped meeting the residency or citizenship/permanent-resident-alien requirements in Pub. L. 106–377 again meets these requirements, and provides VA with proof of this, VA will restore the veteran's full-dollar rate benefits, effective the date the veteran meets the eligibility requirements in 3.42. However, such increased payments will be retroactive no more than one year prior to the date on which VA receives evidence that he or she meets the requirements again. These rules are consistent with VA's existing effective date regulations. If a veteran's payments are reduced based on an absence from the U.S. of 183 or more days during a calendar year, under no circumstances will VA resume payments at the full-dollar rate before the beginning of the following calendar year. This is consistent with what we believe is Congress' intent that these higher payments be paid only to veterans whose principal, actual dwelling place is in the U.S.

II. Burial Benefits

On November 1, 2000, the President signed into law the Veterans Benefits and Health Care Improvement Act of 2000, Pub. L. 106–419, 114 Stat. 1822. Section 332 of Pub. L. 106–419 authorizes VA to pay burial benefits to the survivors of certain Filipino veterans at the full-dollar rate, instead of the half-dollar rate. It includes the same requirements as Pub. L. 106–377 regarding residency and citizenship and also requires that the deceased veteran must have been receiving compensation or have met the disability and income requirements for pension, on the date of his or her death. (Generally, Filipino veterans are not eligible for pension, see 38 U.S.C. 107.) Specifically, with regard to compensation and pension, the veteran must have been receiving compensation under chapter 11 of title 38 or, if the veteran's service had been deemed to be active military, naval, or air service, he or she would have been entitled to pension under 38 U.S.C. 1521 without denial or discontinuance by reason of 38 U.S.C. 1522's net worth restriction. This rule adds a new 38 CFR 3.43 to implement this new law.

Definitions

Although Congress did not define the term ''residing in the United States'' in Pub. L. 106–419, we believe that, when Congress enacted Section 332 of Pub. L. 106–419, it intended to more adequately compensate the survivors of Filipino veterans for the cost of burial in the U.S., which is higher than the cost of burial in the Philippines. We believe that, for the purposes of burial benefits, the relevant issues under this statute are whether the deceased veteran was residing in the U.S. on the date of death (regardless of how long he or she was residing in this country) and whether he or she met the citizenship or resident-alien requirements. We believe this standard is consistent with the governing statute, will not impose an undue evidentiary burden on claimants, and will be relatively simple for VA to administer. In addition, VA does not believe Congress intended to exclude from this added benefit the survivors of veterans who resided in the U.S. but happened to die while temporarily out of the U.S., and we have included a sentence to that effect in § 3.43.

Congress did not define ''United States,'' ''citizen of the United States,'' or ''lawfully admitted for permanent residence'' in Section 332 of Pub. L. 106–419. For the reasons stated in the discussion of compensation benefits above, we are defining these terms in a similar manner, but with minor modifications applicable to burial benefits.

Evidence of Eligibility

VA has an obligation to ensure that claimants receive full-dollar rate benefits only if the deceased veteran met the residency and citizenship/

permanent-resident-alien requirements in the law on the date of death. As proof that the deceased was residing in the U.S., we are requiring that a claimant provide VA with satisfactory evidence (which may include, for example, a driver's license, lease agreement, or utility bills) that the deceased was residing on the date of death at a valid street address in the U.S. We believe these provisions will help ensure program integrity and reduce the possibility of fraud.

For the reasons stated in the discussion of compensation benefits above, this rule states that in claims for full-dollar-rate burial benefits in which the claimant asserts that the deceased veteran was a natural born citizen of the U.S., a valid original or copy of one of the following documents is required:

- A valid U.S. passport;
- A birth certificate showing that he or she was born in the U.S.; or
- A Report of Birth Abroad of a Citizen of the U.S. issued by a U.S. consulate abroad.

For the reasons stated in the discussion of compensation benefits above, this rule states that only verification of naturalized citizen or permanent-resident-alien status by INS to VA will be sufficient proof of such status for purposes of eligibility for full-dollar rate benefits.

We are making this document effective on an emergency basis because there is good cause under the provisions of 5 U.S.C. 553 to publish this interim final rule without regard to prior notice and comment and effective date provisions. Compliance with these provisions would be impracticable, unnecessary, and contrary to the public interest. This interim final rule is necessary to implement legislation that provides additional benefits to disabled Filipino veterans and their survivors, most of whom are elderly. Many of these Filipino veterans, and their survivors, have chronic health problems and financial hardships. Publication of this amendment as an interim final rule will enable VA to immediately provide to these beneficiaries the increased benefits they need in order to better cope with the cost of living in the United States.

Scope and Applicability

On October 27, 2000, the President signed into law the Departments of Veterans Affairs and Housing and Urban Development, and Independent Agencies Appropriations Act, 2001, Pub. L. 106–377, 114 Stat. 1441. Section 501 of Pub. L. 106–377 amended 38 U.S.C. 107 to provide full-rate payments of VA compensation benefits for certain Filipino veterans who had ''[s]ervice before July 1, 1946, in the organized military forces of the Government of the Commonwealth of the Philippines, while such forces were in the service of the Armed Forces of the United States under the military order of the President dated July 26, 1941, including among such military forces organized guerrilla forces under commanders appointed, designated, or subsequently recognized by the Commander in Chief, Southwest Pacific Area, or other competent authority in the Army of the United States. . . .'' Therefore, the provisions of this interim final rule regarding compensation benefits, 38 CFR 3.42, 38 CFR 3.405, and 38 CFR 3.505, apply beginning October 27, 2000.

On November 1, 2000, the President signed into law the Veterans Benefits and Health Care Improvement Act of 2000, Pub. L. 106–419, 114 Stat. 1822. Section 332 of Pub. L. 106–419 authorizes VA to pay burial benefits to the survivors of certain Filipino veterans at the full-dollar rate (instead of the half-dollar rate), if the veteran died after the date of enactment. Therefore, the provision of this interim final rule regarding burial benefits, 38 CFR 3.43, applies when the veteran has died after November 1, 2000.

Paperwork Reduction Act

Proposed 38 CFR 3.42 and 3.43 contain collections of information under the Paperwork Reduction Act of 1995 (44 U.S.C. 3501–3520). Section 3.42 deals with the payment of compensation at the full dollar rate under the provisions of Pub. L. 106–377. Section 3.43 deals with the payment of burial benefits at the full dollar rate under the provisions of Pub. L. 106–419. Accordingly, under section 3507(d) of the Act, VA has submitted a copy of this rulemaking action to OMB for its review of the collections of information.

OMB assigns a control number for each collection of information it approves. VA may not conduct or sponsor, and a person is not required to respond to, a collection of information unless it displays a currently valid OMB control number. The collection of information provisions in this document will not be effective until approved by the OMB and assigned an OMB control number.

Comments on the proposed collections of information should be submitted to the Office of Management and Budget, Attention: Desk Officer for the Department of Veterans Affairs, Office of Information and Regulatory Affairs, Washington, DC 20503, with copies mailed or hand-delivered to: Director, Office of Regulations Management (02D), Department of Veterans Affairs, 810 Vermont Ave., NW, Room 1154, Washington, DC 20420. Comments should indicate that they are submitted in response to ''RIN 2900–AK65.''

Title: Rate of Compensation Payments for Filipino Veterans Residing in the United States.

Summary of collection of information: In proposed 38 CFR 3.42, VA requests information from certain Filipinos ordered into service during World War II to determine their entitlement to VA compensation at the full-dollar rate.

Description of the need for information and proposed use of information: The information is necessary to determine the entitlement of certain Filipinos ordered into service during World War II to VA compensation at the full-dollar rate.

Description of likely respondents: Estimated number of respondents: 800.

Estimated frequency of responses: 1.

Estimated total annual reporting and record keeping burden: 400 hours.

Estimated annual burden per collection: 30 minutes.

Title: Payment Rate of Burial Benefits for certain Filipino veterans of WWII.

Summary of collection of information: In proposed 38 CFR 3.43, VA requests information from survivors of certain Filipinos ordered into service during World War II to determine their entitlement to VA burial benefits at the full-dollar rate.

Description of the need for information and proposed use of information: The information is necessary to determine the entitlement survivors of certain Filipinos ordered into service during World War II to VA burial benefits at the full-dollar rate.

Description of likely respondents: Estimated number of respondents: 250.

Estimated frequency of responses: 1.

Estimated total annual reporting and record keeping burden: 375 hours.

Estimated annual burden per collection: 90 minutes.

The Department considers comments by the public on proposed collections of information in—

- Evaluating whether the proposed collections of information are necessary for the proper performance of the functions of the Department, including whether the information will have practical utility;
- Evaluating the accuracy of the Department's estimate of the burden of the proposed collections of information, including the validity of the methodology and assumptions used;
- Enhancing the quality, usefulness, and clarity of the information to be collected; and

• Minimizing the burden of the collections of information on those who are to respond, including responses through the use of appropriate automated, electronic, mechanical, or other technological collection techniques or other forms of information technology, e.g., permitting electronic submission of responses.

OMB is required to make a decision concerning the collections of information contained in this proposed rule between 30 and 60 days after publication of this document in the **Federal Register**. Therefore, a comment to OMB is best assured of having its full effect if OMB receives it within 30 days of publication. This does not affect the deadline for the public to comment on the proposed rule.

Executive Order 12866

This document has been reviewed by the Office of Management and Budget Under Executive Order 12866.

Regulatory Flexibility Act

The Secretary hereby certifies that this regulatory amendment will not have a significant economic impact on a substantial number of small entities as they are defined in the Regulatory Flexibility Act (RFA), 5 U.S.C. 601–612. The reason for this certification is that these amendments would not directly affect any small entities. Only VA beneficiaries could be directly affected. Therefore, under 5 U.S.C. 605(b), these amendments are exempt from the initial and final regulatory flexibility analysis requirements of 5 U.S.C. 603 and 604.

Catalog of Federal Domestic Assistance Program Numbers

The Catalog of Federal Domestic Assistance program numbers are 64.100, 64.101, 64.104, 64.105, 64.106, 64.109, and 64.110.

List of Subjects in 38 CFR Part 3

Administrative practice and procedure, Claims, Disability benefits, Health care, Pensions, Veterans, Vietnam.

Approved: October 5, 2001.

Anthony J. Principi,

Secretary of Veterans Affairs.

For the reasons set forth in the preamble, 38 CFR part 3 is to be amended as follows:

PART 3—ADJUDICATION

Subpart A—Pension, Compensation, and Dependency and Indemnity Compensation

1. The authority citation for part 3, subpart A continues to read as follows:

Authority: 38 U.S.C. 501(a), unless otherwise noted.

§§ 3.8 and 3.9 [Redesignated as §§ 3.40 and 3.41]

2. Sections 3.8 and 3.9 are redesignated as §§ 3.40 and 3.41, respectively, under the undesignated center heading ''General''.

3. In chapter 1, remove all cross-references to ''§ 3.8'' and ''§ 3.9'' and add, in their place, ''§ 3.40'' and '' § 3.41'' respectively.

4. In newly redesignated § 3.40, paragraph (c)(1) the last sentence of paragraph (c)(1) is revised to read as follows:

§ 3.40 Philippine and Insular Forces.

* * * * *

(c) * * *

(1) * * *Except as provided in §§ 3.42 and 3.43, benefits based on service described in this paragraph are payable at a rate of $0.50 for each dollar authorized under the law.

* * * * *

5. A new § 3.42 is added under ''General'' to read as follows:

§ 3.42 Compensation at the full-dollar rate for certain Filipino veterans residing in the United States.

(a) *Definitions.* For purposes of this section:

(1) *United States* (U.S.) means the states, territories and possessions of the United States; the District of Columbia, and the Commonwealth of Puerto Rico.

(2) *Residing in the U.S.* means that an individual's principal, actual dwelling place is in the U.S. and that the individual meets the residency requirements of paragraph (c)(4) of this section.

(3) *Citizen of the U.S.* means any individual who acquires U.S. citizenship through birth in the territorial U.S., birth abroad as provided under title 8, United States Code, or through naturalization, and has not renounced his or her U.S. citizenship, or had such citizenship cancelled, revoked, or otherwise terminated.

(4) *Lawfully admitted for permanent residence* means that an individual has been lawfully accorded the privilege of residing permanently in the U.S. as an immigrant by the U.S. Immigration and Naturalization Service under title 8, United States Code, such status not having changed.

(b) *Eligibility requirements.* Compensation is payable at the full-dollar rate based on service described in § 3.40(c) or (d) to a veteran who is residing in the United States (U.S.) and is either:

(1) A citizen of the U.S., or

(2) An alien lawfully admitted for permanent residence in the U.S.

(c) *Evidence of eligibility for full-dollar rate benefits.* (1) A valid original or copy of one of the following documents is required to prove that that the veteran is a natural born citizen of the U.S.:

(i) A valid U.S. passport;

(ii) A birth certificate showing that he or she was born in the U.S.; or

(iii) A Report of Birth Abroad of a Citizen of the U.S. issued by a U.S. consulate abroad.

(2) Only verification by the U.S. Immigration and Naturalization Service to VA that a veteran is a naturalized citizen of the U.S. will be sufficient proof of such status.

(3) Only verification by the U.S. Immigration and Naturalization Service to VA that a veteran is an alien lawfully admitted for permanent residence in the U.S. will be sufficient proof of such status.

(4) VA will not pay benefits at the full-dollar rate under this section if the veteran's mailing address is a Post Office box, unless evidence from the U.S. Postal Service shows that it does not deliver mail to the veteran's street address. In order to pay benefits at the full-dollar rate, evidence (such as a driver's license, lease agreement, utility bills) must establish that the veteran is residing at a valid street address in the U.S. and receiving mail at that address.

(d) *Continued eligibility.* (1) In order to continue receiving benefits at the full-dollar rate under this section, a veteran must be physically present in the U.S. for at least 183 days of each calendar year in which he or she receives payments at the full-dollar rate, and may not be absent from the U.S. for more than 60 consecutive days at a time. However, if a veteran becomes eligible for full-dollar rate benefits on an initial basis, on or after July 1 of any calendar year, the 183-day rule will not apply during that calendar year. VA will not consider a veteran to have been absent from the U.S. if he or she left and returned to the U.S. on the same date.

(2) A veteran receiving benefits at the full-dollar rate under this section must notify VA within 30 days of leaving the U.S. or within 30 days if he or she loses either his or her U.S. citizenship or lawful permanent resident alien status. When a veteran no longer meets the eligibility requirements of paragraph (a) of this section, VA will reduce his or her payment to the rate of $0.50 for each dollar authorized under the law, effective on the date determined under § 3.505. If such veteran regains his or her U.S. citizenship or lawful

permanent resident alien status, VA will restore full-dollar rate benefits, effective the date the veteran meets the eligibility requirements in § 3.42.

(3) When requested to do so by VA, a veteran receiving benefits at the full-dollar rate under this section must verify that he or she continues to meet the residency and citizenship/ permanent-resident-alien status requirements of paragraph (b). VA will advise the veteran at the time of the request that the verification must be furnished within 60 days and that failure to do so will result in the reduction of benefits. If the veteran fails to furnish the evidence within 60 days, VA will reduce his or her payment to the rate of $0.50 for each dollar authorized, as provided in § 3.652.

(4) A veteran receiving benefits at the full-dollar rate under this section must promptly notify VA of any change of his or her address. If mail from VA to the veteran is returned to VA by the U.S. Postal Service, VA will reduce his or her payment to the rate of $0.50 for each dollar authorized under law, effective on the date determined under § 3.505.

(e) *Effective date for restored eligibility.* In the case of a veteran receiving benefits at the full-dollar rate, if his or her payments are reduced to the rate of $0.50 for each dollar authorized under the law, VA will resume payments at the full-dollar rate, if otherwise in order, effective the first day of the month following the date on which he or she again meets the requirements. However, such increased payments will be retroactive no more than one year prior to the date on which VA receives evidence that he or she again meets the requirements. If payments are reduced based on an absence from the U.S. of 183 or more days during a calendar year, VA will not resume payments at the full-dollar rate before the first day of the following calendar year.

(Authority: 38 U.S.C. 107, 501(a))

6. A new § 3.43 is added to under ''General'' read as follows:

§ 3.43 Burial benefits at the full-dollar rate for certain Filipino veterans residing in the United States on the date of death.

(a) *Definitions.* For purposes of this section:

(1) *United States* (U.S.) means the states, territories and possessions of the United States, the District of Columbia, and the Commonwealth of Puerto Rico.

(2) *Residing in the U.S.* means an individual's principal, actual dwelling place was in the U.S. When death occurs outside the U.S., VA will consider the deceased individual to have been residing in the U.S. on the date of death if the individual maintained his or her principal actual dwelling place in the U.S. until his or her most recent departure from the U.S., and he or she had been physically absent from the U.S. less than 61 consecutive days when he or she died.

(3) *Citizen of the U.S.* means any individual who acquires U.S. citizenship through birth in the territorial U.S., birth abroad as provided under title 8, United States Code, or through naturalization, and has not renounced his or her U.S. citizenship, or had such citizenship cancelled, revoked, or otherwise terminated.

(4) *Lawfully admitted for permanent residence* means that the individual was lawfully accorded the privilege of residing permanently in the U.S. as an immigrant by the U.S. Immigration and Naturalization Service, and on the date of death, still had this status.

(b) *Payment of burial benefits at the full-dollar rate.* VA will pay burial benefits under chapter 23 of title 38, United States Code, at the full-dollar rate, based on service described in § 3.40(c) or (d), when an individual who performed such service dies after November 1, 2000, and was on the date of death:

(1) Residing in the U.S.; and

(2) Either—

(i) A citizen of the U.S., or

(ii) An alien lawfully admitted for permanent residence in the U.S.; and

(3) Either—

(i) Receiving compensation under chapter 11 of title 38, United States Code; or

(ii) Would have satisfied the disability, income and net worth requirements of § 3.3(a)(3) of this part and would have been eligible for pension if the veteran's service had been deemed to be active military, naval, or air service.

(c) *Evidence of eligibility.* (1) In a claim for full-dollar rate burial payments based on the deceased veteran having been a natural born citizen of the U.S., a valid original or copy of one of the following documents is required:

(i) A valid U.S. passport;

(ii) A birth certificate showing that he or she was born in the U.S.; or

(iii) A Report of Birth Abroad of a Citizen of the U.S. issued by a U.S. consulate abroad.

(2) In a claim based on the deceased veteran having been a naturalized citizen of the U.S., only verification of that status by the U.S. Immigration and Naturalization Service to VA will be sufficient proof for purposes of eligibility for full-dollar rate benefits.

(3) In a claim based on the deceased veteran having been an alien lawfully admitted for permanent residence in the U.S., only verification of that status by the U.S. Immigration and Naturalization Service to VA will be sufficient proof for purposes of eligibility for full-dollar rate benefits.

(4) In a claim for burial benefits at the full-dollar rate, evidence (which may include, for example, a driver's license, lease agreement or utility bills) must establish that the deceased veteran was, on the date of death, residing at a valid street address in the U.S.

(Authority: 38 U.S.C. 107, 501(a))

7. A new § 3.405 is added under ''Effective Dates''to read as follows:

§ 3.405 Filipino veterans; benefits at the full-dollar rate.

For veterans who met the eligibility requirements in § 3.42 on October 27, 2000, and maintained such eligibility continuously from that date to the date of an administrative determination of entitlement, the effective date of awards of compensation at the full-dollar rate will be October 27, 2000. For all other veterans, awards of compensation for Filipino veterans under § 3.42 will be effective on the latest of the dates stated in this section:

(a) Date entitlement arose;

(b) Date on which the veteran first met the residency and citizenship/ permanent-resident-alien status requirements in § 3.42, if VA receives evidence of this within 1 year of that date;

(c) Effective date of the rating establishing service connection, provided VA receives evidence that the veteran meets the residency and citizenship/ permanent-resident-alien status requirements in § 3.42 within 1 year of notification of such rating action;

(d) Date the veteran returned to the United States after absence of more than 60 consecutive days; or

(e) First day of the year following the year in which the veteran was absent from the United States for a total of 183 days or more, or the first day after that date that the veteran returns to the United States.

(Authority: 38 U.S.C. 107)

8. A new § 3.505 is added under ''Reductions and Discontinuances'' to read as follows:

§ 3.505 Filipino veterans; benefits at the full-dollar rate.

The effective date of discontinuance of compensation for Filipino veterans under § 3.42 will be the earliest of the dates stated in this section. Where an award is reduced, the reduced rate will be payable the day following the date of discontinuance of the greater benefit.

(a) If a veteran receiving benefits at the full-dollar rate under § 3.42 is physically absent from the U.S. for a total of 183 days or more during any calendar year, VA will reduce compensation to the rate of $0.50 for each dollar authorized under the law, effective on the 183rd day of absence from the U.S.

(b) If a veteran receiving benefits at the full-dollar rate under § 3.42 is physically absent from the U.S. for more than 60 consecutive days, VA will reduce his or her compensation to the rate of $0.50 for each dollar authorized under the law, effective on the 61st day of the absence.

(c) If a veteran receiving benefits at the full-dollar rate under § 3.42 loses either U.S. citizenship or status as an alien lawfully admitted for permanent residence in the U.S., VA will reduce the compensation to the rate of $0.50 for each dollar authorized under the law, effective on the day he or she no longer satisfies one of these criteria.

(d) If mail to a veteran receiving benefits at the full-dollar rate under § 3.42 is returned to VA by the U.S. Postal Service, VA will reduce his or her payment to the rate of $0.50 for each dollar authorized under law, effective on the date of the last payment of compensation benefits.

(Authority: 38 U.S.C. 107)

[FR Doc. 01–31828 Filed 12–26–01; 8:45 am]

BILLING CODE 8320–01–P

ENVIRONMENTAL PROTECTION AGENCY

40 CFR Part 52

Approval and Promulgation of Implementation Plans

CFR Correction

In Title 40 of the Code of Federal Regulations, part 52 (§ § 52.01 to 52.1018), revised as of July 1, 2001, § 52.120 is corrected by removing paragraph (c)(94)(i)(E).

[FR Doc. 01–55534 Filed 12–26–01; 8:45 am]

BILLING CODE 1505–01–D

ENVIRONMENTAL PROTECTION AGENCY

40 CFR Part 80

Regulation of Fuels and Fuel Additives

CFR Correction

In Title 40 of the Code of Federal Regulations, Parts 72 to 80, revised as of July 1, 2001, § 80.81 is corrected by revising paragraph (a) to read as follows:

§ 80.81 Enforcement exemptions for California gasoline.

* * * * *

(a) The requirements of subparts D, E, F and J of this part are modified in accordance with the provisions contained in this section in the case of California gasoline.

* * * * *

[FR Doc. 01–55535 Filed 12–26–01; 8:45 am]

BILLING CODE 1505–01–D

ENVIRONMENTAL PROTECTION AGENCY

40 CFR Parts 153 and 180

[OPP–301026A; FRL–6813–6]

RIN 2070–AB78

Pesticide Chemicals Not Requiring a Tolerance or an Exemption from a Tolerance; Rhodamine B; Revocation of Unlimited Tolerance Exemption

AGENCY: Environmental Protection Agency (EPA).

ACTION: Final rule.

SUMMARY: This final rule creates a new subpart E in 40 CFR part 180. This subpart will be titled: Pesticide Chemicals Not Requiring a Tolerance or an Exemption from a Tolerance. It will contain a list of the pesticide chemicals (including, as appropriate, their limitations and use patterns) for which the Agency has determined that neither a tolerance nor an exemption from the requirement of a tolerance is needed under the Federal Food, Drug, and Cosmetic Act (FFDCA). The Agency is acting on its own initiative. This document also revokes the unlimited tolerance exemption for the inert ingredient Rhodamine B in 40 CFR 180.1001 (c), and amends by time-limiting the unlimited tolerance exemption for Rhodamine B in 40 CFR 180.1001 (e). These regulatory actions are part of the tolerance reassessment requirements of the Federal Food, Drug, and Cosmetic Act (FFDCA) section 408(q), as amended by the Food Quality Protection Act (FQPA) of 1996. By law, EPA is required to reassess 66% of the tolerances in existence on August 2, 1996, by August 2002, or about 6,400 tolerances. The regulatory actions taken in this document, would be counted toward the August 2002 deadline.

DATES: This final rule is effective on December 27, 2001.

FOR FURTHER INFORMATION CONTACT: Kathryn Boyle , Registration Division (7505C), Office of Pesticide Programs, Environmental Protection Agency, 1200 Pennsylvania Ave., NW., Washington, DC 20460; telephone number: (703) 305–6304; fax number: (703) 305–0599; e-mail address: boyle.kathryn@epa.gov.

SUPPLEMENTARY INFORMATION:

I. General Information

A. Does this Action Apply to Me?

You may be potentially affected by this action if you are an agricultural producer, food manufacturer, or pesticide manufacturer. Potentially affected categories and entities may include, but are not limited to:

Categories	NAICS codes	Examples of potentially affected entities
Industry	111 112 311 32532	Crop production Animal production Food manufacturing Pesticide manufacturing

This listing is not intended to be exhaustive, but rather provides a guide for readers regarding entities likely to be affected by this action. Other types of entities not listed in this table could also be affected. The North American Industrial Classification System (NAICS) codes are provided to assist you and others in determining whether or not this action might apply to certain entities. If you have questions regarding the applicability of this action to a particular entity, consult the person listed under **FOR FURTHER INFORMATION CONTACT**.

B. How Can I Get Additional Information, Including Copies of this Document and Other Related Documents?

1. *Electronically*. You may obtain electronic copies of this document, and certain other related documents that might be available electronically, from the EPA Internet Home Page at http://www.epa.gov/. To access this document, on the Home Page select ''Laws and Regulations,'' ''Regulations and Proposed Rules,'' and then look up the entry for this document under the ''**Federal Register**—Environmental Documents.'' You can also go directly to the **Federal Register** listings at http://www.epa.gov/fedrgstr/. A frequently updated electronic version of 40 CFR parts 153 and 180 are available at: http://www.access.gpo.gov/nara/cfr/cfrhtml_153/Title_40/40cfr153_00.html and http://www.access.gpo.gov/nara/cfr/cfrhtml_180/Title_40/40cfr180_00.html, a beta site currently under development.

2. *In person*. The Agency has established an official record for this

action under docket control number OPP–301026A. The official record consists of the documents specifically referenced in this action, any public comments received during an applicable comment period, and other information related to this action, including any information claimed as confidential business information (CBI). This official record includes the documents that are physically located in the docket, as well as the documents that are referenced in those documents. The public version of the official record does not include any information claimed as CBI. The public version of the official record, which includes printed, paper versions of any electronic comments submitted during an applicable comment period, is available for inspection in the Public Information and Records Integrity Branch (PIRIB), Rm. 119, Crystal Mall #2, 1921 Jefferson Davis Hwy., Arlington, VA, from 8:30 a.m. to 4 p.m., Monday through Friday, excluding legal holidays. The PIRIB telephone number is (703) 305–5805.

II. Background

In the **Federal Register** of August 2, 2001 (66 FR 40170) (FRL–6598–4), EPA issued a proposal pursuant to section 408 of the FFDCA, 21 U.S.C. 346a as amended by the FQPA (Public Law 104–170) to amend 40 CFR by creating a new subpart E, and to revoke two unlimited tolerance exemptions for the inert ingredient Rhodamine B (CAS Reg. No. 81–88–9). New subpart E will contain a list of the pesticide chemicals (including, as appropriate, their limitations and use patterns) for which the Agency has determined that neither a tolerance nor an exemption from the requirement of a tolerance is needed under the FFDCA. The only chemical included in subpart E at its creation is the inert ingredient Rhodamine B (CAS Reg. No. 81–88–9) when used as a dye for seed treatment. The revocations of the Rhodamine B tolerance exemptions were based on EPA's conclusion that the exemptions are for uses of Rhodamine B that are no longer extant other than the use included in subpart E. Three comments were received in response to the proposed rule.

The comments from both the American Chemistry Council and from Gustafson supported the creation of the new subpart E. Gustafson has also suggested an additional chemical (an active ingredient) that it believes could be appropriately added to the new subpart. The Agency will consider this request, and, if appropriate, initiate such procedures as necessary to add this additional chemical to subpart E. A comment was also received from Boehringer Ingelheim Vetmedica, Inc. (BIVI) informing the Agency that currently there are two animal ear tag products containing Rhodamine B that are being manufactured and distributed. BIVI has agreed to remove the Rhodamine B from their products. To allow time for BIVI to reformulate and then for the ear tags containing Rhodamine B to clear the channels of trade, the Agency will time-limit the Rhodamine B tolerance exemption under 40 CFR 180.1001 (e) to expire in 3 years.

Based on the reasons set forth in the preamble to the proposed rule, and considering the comments received by the Agency in response to the proposed rule, EPA is creating a new subpart E, revoking one unlimited tolerance exemption, and revising one tolerance exemption by time-limiting the exemption to expire in three years.

These regulatory actions are part of the tolerance reassessment requirements of section 408(q) of the FFDCA, as amended by the FQPA of 1996. By law, EPA is required to reassess 66% of the tolerances in existence on August 2, 1996, by August 2002, or about 6,400 tolerances. The regulatory actions in this document, the revocation of two tolerance exemptions, would be counted toward the August 2002 deadline.

III. Objections and Hearing Requests

Under section 408(g) of the FFDCA, as amended by the FQPA, any person may file an objection to any aspect of this regulation and may also request a hearing on those objections. The EPA procedural regulations which govern the submission of objections and requests for hearings appear in 40 CFR part 178. Although the procedures in those regulations require some modification to reflect the amendments made to the FFDCA by the FQPA of 1996, EPA will continue to use those procedures, with appropriate adjustments, until the necessary modifications can be made. The new section 408(g) provides essentially the same process for persons to ''object'' to a regulation for an exemption from the requirement of a tolerance issued by EPA under new section 408(d), as was provided in the old FFDCA sections 408 and 409. However, the period for filing objections is now 60 days, rather than 30 days.

A. What Do I Need to Do to File an Objection or Request a Hearing?

You must file your objection or request a hearing on this regulation in accordance with the instructions provided in this unit and in 40 CFR part 178. To ensure proper receipt by EPA, you must identify docket control number OPP–301026A in the subject line on the first page of your submission. All requests must be in writing, and must be mailed or delivered to the Hearing Clerk on or before February 25, 2002.

1. *Filing the request.* Your objection must specify the specific provisions in the regulation that you object to, and the grounds for the objections (40 CFR 178.25). If a hearing is requested, the objections must include a statement of the factual issues(s) on which a hearing is requested, the requestor's contentions on such issues, and a summary of any evidence relied upon by the objector (40 CFR 178.27). Information submitted in connection with an objection or hearing request may be claimed confidential by marking any part or all of that information as CBI. Information so marked will not be disclosed except in accordance with procedures set forth in 40 CFR part 2. A copy of the information that does not contain CBI must be submitted for inclusion in the public record. Information not marked confidential may be disclosed publicly by EPA without prior notice.

Mail your written request to: Office of the Hearing Clerk (1900), Environmental Protection Agency, 1200 Pennsylvania Ave., NW., Washington, DC 20460. You may also deliver your request to the Office of the Hearing Clerk in Rm. C400, Waterside Mall, 401 M St., SW., Washington, DC 20460. The Office of the Hearing Clerk is open from 8 a.m. to 4 p.m., Monday through Friday, excluding legal holidays. The telephone number for the Office of the Hearing Clerk is (202) 260–4865.

2. *Tolerance fee payment.* If you file an objection or request a hearing, you must also pay the fee prescribed by 40 CFR 180.33(i) or request a waiver of that fee pursuant to 40 CFR 180.33(m). You must mail the fee to: EPA Headquarters Accounting Operations Branch, Office of Pesticide Programs, P.O. Box 360277M, Pittsburgh, PA 15251. Please identify the fee submission by labeling it ''Tolerance Petition Fees.''

EPA is authorized to waive any fee requirement ''when in the judgement of the Administrator such a waiver or refund is equitable and not contrary to the purpose of this subsection.'' For additional information regarding the waiver of these fees, you may contact James Tompkins by phone at (703) 305-5697, by e-mail at tompkins.jim@epa.gov, or by mailing a request for information to Mr. Tompkins at Registration Division (7505C), Office of Pesticide Programs, Environmental Protection Agency, 1200 Pennsylvania Ave., NW., Washington, DC 20460.

If you would like to request a waiver of the tolerance objection fees, you must mail your request for such a waiver to: James Hollins, Information Resources and Services Division (7502C), Office of Pesticide Programs, Environmental Protection Agency, 1200 Pennsylvania Ave., NW., Washington, DC 20460.

3. *Copies for the Docket*. In addition to filing an objection or hearing request with the Hearing Clerk as described in Unit VI.A., you should also send a copy of your request to the PIRIB for its inclusion in the official record that is described in Unit I.B.2. Mail your copies, identified by docket control number OPP–301026A, to: Public Information and Records Integrity Branch, Information Resources and Services Division (7502C), Office of Pesticide Programs, Environmental Protection Agency, 1200 Pennsylvania Ave., NW., Washington, DC 20460. In person or by courier, bring a copy to the location of the PIRIB described in Unit I.B.2. You may also send an electronic copy of your request via e-mail to: opp-docket@epa.gov. Please use an ASCII file format and avoid the use of special characters and any form of encryption. Copies of electronic objections and hearing requests will also be accepted on disks in WordPerfect 6.1/8.0 or ASCII file format. Do not include any CBI in your electronic copy. You may also submit an electronic copy of your request at many Federal Depository Libraries.

B. When Will the Agency Grant a Request for a Hearing?

A request for a hearing will be granted if the Administrator determines that the material submitted shows the following: There is a genuine and substantial issue of fact; there is a reasonable possibility that available evidence identified by the requestor would, if established resolve one or more of such issues in favor of the requestor, taking into account uncontested claims or facts to the contrary; and resolution of the factual issues(s) in the manner sought by the requestor would be adequate to justify the action requested (40 CFR 178.32).

IV. Regulatory Assessment Requirements

The Agency is acting on its own initiative under FFDCA section 408(e) in revoking these tolerances and in establishing a new subpart E in 40 CFR part 180 that will contain a list of the pesticide chemicals (including, as appropriate, their limitations and use patterns) for which the Agency has determined that neither a tolerance nor an exemption from the requirement of a tolerance is needed under FFDCA. Under Executive Order 12866, entitled *Regulatory Planning and Review* (58 FR 51735, October 4, 1993), this action is not a ''significant regulatory action'' subject to review by the Office of Management and Budget (OMB). Because this rule has been exempted from review under Executive Order 12866 due to its lack of significance, this rule is not subject to Executive Order 13211, *Actions Concerning Regulations That Significantly Affect Energy Supply, Distribution, or Use* (66 FR 28355, May 22, 2001).

This final rule does not contain any information collections subject to OMB approval under the Paperwork Reduction Act (PRA), 44 U.S.C. 3501 *et seq.*, or impose any enforceable duty or contain any unfunded mandate as described under Title II of the Unfunded Mandates Reform Act of 1995 (UMRA) (Public Law 104–4). Nor does it require any special considerations under Executive Order 12898, entitled *Federal Actions to Address Environmental Justice in Minority Populations and Low-Income Populations* (59 FR 7629, February 16, 1994); or OMB review or any Agency action under Executive Order 13045, entitled *Protection of Children from Environmental Health Risks and Safety Risks* (62 FR 19885, April 23, 1997).

This action does not involve any technical standards that would require Agency consideration of voluntary consensus standards pursuant to section 12(d) of the National Technology Transfer and Advancement Act of 1995 (NTTAA), Public Law 104–113, section 12(d) (15 U.S.C. 272 note).

This rule simply establishes a new subpart E in 40 CFR part 180 that will contain a list of the pesticide chemicals (including, as appropriate, their limitations and use patterns) for which the Agency has determined that neither a tolerance nor an exemption from the requirement of a tolerance is needed under FFDCA, and only amends an existing unlimited tolerance exemption to make it time limited. The Agency has determined that this action will not result in significant adverse economic impacts. Pursuant to the Regulatory Flexibility Act (RFA) (5 U.S.C. 601 *et seq.*), the Agency previously assessed whether revocations of tolerances or tolerance exemptions might significantly impact a substantial number of small entities and concluded that, as a general matter, these actions do not impose a significant economic impact on a substantial number of small entities. This analysis was published on December 17, 1997 (62 FR 66020), and was provided to the Chief Counsel for Advocacy of the Small Business Administration. Taking into account this analysis, the available information concerning the pesticide chemicals listed in this rule, the Agency knows of no extraordinary circumstances that exist as to the present revocation that would change EPA's previous analysis. Therefore, the Agency hereby certifies pursuant to the section 605(b) of the RFA that this rule will not have a significant negative economic impact on a substantial number of small entities.

In addition, the Agency has determined that this action will not have a substantial direct effect on States, on the relationship between the national government and the States, or on the distribution of power and responsibilities among the various levels of government, as specified in Executive Order 13132, entitled *Federalism* (64 FR 43255, August 10, 1999). Executive Order 13132 requires EPA to develop an accountable process to ensure ''meaningful and timely input by State and local officials in the development of regulatory policies that have federalism implications.'' ''Policies that have federalism implications'' is defined in the Executive Order to include regulations that have ''substantial direct effects on the States, on the relationship between the national government and the States, or on the distribution of power and responsibilities among the various levels of government.'' This final rule directly regulates growers, food processors, food handlers and food retailers, not States. This action does not alter the relationships or distribution of power and responsibilities established by Congress in the preemption provisions of FFDCA section 408(n)(4).

For these same reasons, the Agency has determined that this rule does not have any ''tribal implications'' as described in Executive Order 13175, entitled *Consultation and Coordination with Indian Tribal Governments* (65 FR 67249, November 6, 2000). Executive Order 13175, requires EPA to develop an accountable process to ensure ''meaningful and timely input by tribal officials in the development of regulatory policies that have tribal implications.'' ''Policies that have tribal implications'' is defined in the Executive Order to include regulations that have ''substantial direct effects on one or more Indian tribes, on the relationship between the Federal government and the Indian tribes, or on the distribution of power and responsibilities between the Federal government and Indian tribes.'' This rule will not have substantial direct effects on tribal governments, on the relationship between the Federal

government and Indian tribes, or on the distribution of power and responsibilities between the Federal government and Indian tribes, as specified in Executive Order 13175. Thus, Executive Order 13175 does not apply to this rule.

V. Submission to Congress and the Comptroller General

The Congressional Review Act, 5 U.S.C. 801 *et seq.*, as added by the Small Business Regulatory Enforcement Fairness Act of 1996, generally provides that before a rule may take effect, the Agency promulgating the rule must submit a rule report, which includes a copy of the rule, to each House of the Congress and the Comptroller General of the United States. EPA will submit a report containing this rule and other required information to the U.S. Senate, the U.S. House of Representatives, and the Comptroller General of the United States prior to publication of the rule in the **Federal Register**. This rule is not a ''major rule'' as defined by 5 U.S.C. 804(2).

List of Subjects in 40 CFR Parts 153 and 180

Environmental protection, Administrative practice and procedure, Agricultural commodities, Pesticides and pests, Reporting and recordkeeping requirements.

Dated: December 14, 2001.

James Jones,

Director, Office of Pesticide Programs.

Therefore, 40 CFR chapter I be amended as follows:

PART 153—[AMENDED]

1. In part 153:

a. The authority citation for part 153 would continue to read as follows:

Authority: 15 U.S.C. 136 *et seq.*

b. Section 153.155 (c) is revised to read as follows.

§ 153.155 Seed treatment products.

* * * * *

(c) EPA-approved dyes for seed treatment are listed in:

(1) Section 180.1001(c) and (d) if an exemption from the requirement of a tolerance has been established.

(2) Section 180.2010 if EPA has determined that residues of the dye will be present, if at all, at levels that are below the threshold of regulation.

(3) Section 180.2020 if it has been determined that no tolerance or exemption from the requirement of a tolerance is needed as a result of a determination by EPA that the use is unlikely to result in residues in food/feed.

PART 180—[AMENDED]

2. In part 180:

a. The authority citation for part 180 would continue to read as follows:

Authority: 21 U.S.C. 321(q), 346(a) and 371.

b. In § 180.1001 the table in paragraph (c) is amended by removing the entry for ''Rhodamine B'' and in paragraph (e) the table is amended by revising the entry to read as follows:

§ 180.1001 Exemptions from the requirement of a tolerance.

* * * * *

(e) * * *

Inert ingredients	Limits	Uses
*	*	*
Rhodamine B	Expires December 27, 2004.	Dye for use in ear tags only
*	*	*

c. By adding new subpart E, consisting of § 180.2000–180.2020, to read as follows:

Subpart E—Pesticide Chemicals Not Requiring a Tolerance or an Exemption from a Tolerance

Sec.

180.2000 Scope.
180.2003 Definitions.
180.2010 Threshold of regulation determinations. [Reserved]
180.2020 Non-food determinations.

§ 180.2000 Scope.

This subpart sets forth the pesticide chemicals for use in agricultural or other food-related settings for which neither a tolerance nor an exemption is deemed to be needed by EPA.

§ 180.2003 Definitions.

(a) Food uses are the uses of a pesticide chemical that are likely to yield residues in food or feed crops, meat, milk, poultry or eggs.

(b) Non-food uses are those uses that are not likely to yield residues in food or feed crops, meat, milk, poultry or eggs.

§ 180.2010 Threshold of regulation determinations. [Reserved]

§ 180.2020 Non-food determinations.

The following pesticide chemical uses do not need a tolerance or exemption from the requirement of a tolerance based on EPA's determination that they are not likely to result in residues in or on food.

Pesticide Chemical	CAS Reg. No.	Limits	Uses
Rhodamine B	81–88–9	Not to exceed 2% by weight of the formulated product and 60 ppm on the treated seed	Dye for seed treatment

[FR Doc. 01–31802 Filed 12–26–01; 8:45 am]
BILLING CODE 6560–50–S

ENVIRONMENTAL PROTECTION AGENCY

40 CFR Part 180

[OPP–301205; FRL–6817–9]

RIN 2070–AB78

Imazamox; Pesticide Tolerance

AGENCY: Environmental Protection Agency (EPA).

ACTION: Final rule.

SUMMARY: This regulation establishes a tolerance for residues of imazamox in or on the raw agricultural commodities: alfalfa forage, seed and hay, canola seed, vegetable, legume, group wheat forage, grain, bran, germ, shorts, hay and straw. BASF Corporation, formerly American Cyanamid Company, requested this tolerance under the Federal Food, Drug, and Cosmetic Act, as amended by the Food Quality Protection Act of 1996.

DATES: This regulation is effective December 27, 2001. Objections and requests for hearings, identified by docket control number OPP–301205, must be received by EPA on or before February 25, 2002.

ADDRESSES: Written objections and hearing requests may be submitted by mail, in person, or by courier. Please follow the detailed instructions for each method as provided in Unit VI. of the **SUPPLEMENTARY INFORMATION.** To ensure proper receipt by EPA, your objections and hearing requests must identify docket control number OPP–301205 in the subject line on the first page of your response.

FOR FURTHER INFORMATION CONTACT: By mail: Jim Tompkins, Registration Division (7505C), Office of Pesticide Programs, Environmental Protection Agency, 1200 Pennsylvania Ave., NW., Washington, DC 20460; telephone number: (703) 305–5697; and e-mail address: tompkins.jim@epa.gov.

SUPPLEMENTARY INFORMATION:

I. General Information

A. Does this Action Apply to Me?

You may be affected by this action if you are an agricultural producer, food manufacturer, or pesticide manufacturer. Potentially affected categories and entities may include, but are not limited to:

Categories	NAICS	Examples of Potentially Affected Entities
Industry	111	Crop production
	112	Animal production
	311	Food manufacturing
	32532	Pesticide manufacturing

This listing is not intended to be exhaustive, but rather provides a guide for readers regarding entities likely to be affected by this action. Other types of entities not listed in the table could also be affected. The North American Industrial Classification System (NAICS) codes have been provided to assist you and others in determining whether or not this action might apply to certain entities. If you have questions regarding the applicability of this action to a particular entity, consult the person listed under **FOR FURTHER INFORMATION CONTACT**.

B. How Can I Get Additional Information, Including Copies of this Document and Other Related Documents?

1. *Electronically.*You may obtain electronic copies of this document, and certain other related documents that might be available electronically, from the EPA Internet Home Page at http://www.epa.gov/. To access this document, on the Home Page select ''Laws and Regulations'', ''Regulations and Proposed Rules,'' and then look up the entry for this document under the ''**Federal Register**—Environmental Documents.'' You can also go directly to the **Federal Register** listings at http://www.epa.gov/fedrgstr/. To access the OPPTS Harmonized Guidelines referenced in this document, go directly to the guidelines at http://www.epa.gov/opptsfrs/home/guidelin.htm. A frequently updated electronic version of 40 CFR part 180 is available at http://www.access.gpo.gov/nara/cfr/cfrhtml_180/Title_40/40cfr180_00.html, a beta site currently under development.

2. *In person.* The Agency has established an official record for this action under docket control number OPP–301205. The official record consists of the documents specifically referenced in this action, and other information related to this action, including any information claimed as Confidential Business Information (CBI). This official record includes the documents that are physically located in the docket, as well as the documents that are referenced in those documents. The public version of the official record does not include any information claimed as CBI. The public version of the official record, which includes printed, paper versions of any electronic comments submitted during an applicable comment period is available for inspection in the Public Information and Records Integrity Branch (PIRIB), Rm. 119, Crystal Mall #2, 1921 Jefferson Davis Hwy., Arlington, VA, from 8:30 a.m. to 4 p.m., Monday through Friday, excluding legal holidays. The PIRIB telephone number is (703) 305–5805.

II. Background and Statutory Findings

In the **Federal Register** of March 29, 2000 (65 FR 16594) (FRL–6498–5), EPA issued a notice pursuant to section 408 of the Federal Food, Drug, and Cosmetic Act (FFDCA), 21 U.S.C. 346a as amended by the Food Quality Protection Act of 1996 (FQPA) (Public Law 104–170) announcing the filing of a pesticide petition (PP) for tolerance by American Cyanamid Company, P.O. Box 400, Princeton, NJ 08543–0400. This notice included a summary of the petition prepared by American Cyanamid Company, the registrant. There were no comments received in response to the notice of filing. The petition was subsequently transferred to BASF Corporation, P.O. Box 400, Princeton, NJ 08543–0400.

The petition requested that 40 CFR 180.508 be amended by establishing a tolerance for residues of the herbicide imazamox, (±)-2-[4,5-dihydro-4-methyl-4-(1-methylethyl)-5-oxo-1H-imidazol-2-yl]-5-(methoxymethyl)-3-pyridinecarboxylic acid, in or on the raw agricultural commodities: vegetable, legume, group at 0.05 ppm; canola, seed at 0.05 ppm. Tolerances are established for the combined residues of the herbicide imazamox, and its metabolite, AC263284 (±)-2-[4,5-dihydro-4-methyl-4-(1-methylethyl)-5-oxo-1H-imidazol-2-yl]-5-(hydroxymethyl)-3-pyridinecarboxylic acid in or on the following raw agricultural commodities wheat, grain, forage and hay at 0.3 ppm, wheat, straw at 0.2 ppm, wheat, bran at 1.0 ppm, wheat, shorts at 0.8 ppm, and wheat, germ at 0.6 ppm. Tolerances are established for the combined residues of the herbicide imazamox, and its metabolite, AC263284 (free and conjugated), and AC312622, (±)-2-[4,5-dihydro-4-methyl-4-(1-methylethyl)-5-oxo-1H-imidazol-2-yl]-3,5-pyridinecarboxylic acid in or on the following raw agricultural commodities: alfalfa, seed at 0.4 ppm, alfalfa, forage at 2.0 ppm and alfalfa, hay at 4.0 ppm respectively.

Section 408(b)(2)(A)(i) of the FFDCA allows EPA to establish a tolerance (the legal limit for a pesticide chemical residue in or on a food) only if EPA determines that the tolerance is ''safe.'' Section 408(b)(2)(A)(ii) defines ''safe'' to mean that ''there is a reasonable

certainty that no harm will result from aggregate exposure to the pesticide chemical residue, including all anticipated dietary exposures and all other exposures for which there is reliable information.'' This includes exposure through drinking water and in residential settings, but does not include occupational exposure. Section 408(b)(2)(C) requires EPA to give special consideration to exposure of infants and children to the pesticide chemical residue in establishing a tolerance and to ''ensure that there is a reasonable certainty that no harm will result to infants and children from aggregate exposure to the pesticide chemical residue....''

EPA performs a number of analyses to determine the risks from aggregate exposure to pesticide residues. For further discussion of the regulatory requirements of section 408 and a complete description of the risk assessment process, see the final rule on Bifenthrin Pesticide Tolerances (62 FR 62961, November 26, 1997) (FRL–5754–7).

III. Aggregate Risk Assessment and Determination of Safety

Consistent with section 408(b)(2)(D), EPA has reviewed the available scientific data and other relevant information in support of this action. EPA has sufficient data to assess the hazards of and to make a determination on aggregate exposure, consistent with section 408(b)(2), for tolerances for residues of the herbicide imazamox, (±)-2-[4,5-dihydro-4-methyl-4-(1-methylethyl)-5-oxo-1H-imidazol-2-yl]-5-(methoxymethyl)-3-pyridinecarboxylic acid, in or on the raw agricultural commodities: vegetable, legume, group at 0.05 ppm; canola, seed at 0.05 ppm. Tolerances are established for the combined residues of the herbicide imazamox, and its metabolite, AC263284 (±)-2-[4,5-dihydro-4-methyl-4-(1-methylethyl)-5-oxo-1H-imidazol-2-yl]-5-(hydroxymethyl)-3-pyridinecarboxylic acid in or on the following raw agricultural commodities wheat, grain, forage and hay at 0.3 ppm, wheat, straw at 0.2 ppm, wheat, bran at 1.0 ppm, wheat, shorts at 0.8 ppm, and wheat, germ at 0.6 ppm. Tolerances are established for the combined residues of the herbicide imazamox, and its metabolite, AC263284 (free and conjugated), and AC312622, (±)-2-[4,5-dihydro-4-methyl-4-(1-methylethyl)-5-oxo-1H-imidazol-2-yl]-3,5-pyridinecarboxylic acid in or on the following raw agricultural commodities: alfalfa, seed at 0.4 ppm, alfalfa, forage at 2.0 ppm and alfalfa, hay at 4.0 ppm respectively. EPA's assessment of exposures and risks associated with establishing the tolerance follows.

A. Toxicological Profile

EPA has evaluated the available toxicity data and considered its validity, completeness, and reliability as well as the relationship of the results of the studies to human risk. EPA has also considered available information concerning the variability of the sensitivities of major identifiable subgroups of consumers, including infants and children. The nature of the toxic effects caused by imazamox are discussed in the following Table 1 as well as the no observed adverse effect level (NOAEL). There was no lowest observed adverse effect level (LOAEL) in any of the subchronic or chronic toxicity studies reviewed.

TABLE 1.—SUBCHRONIC, CHRONIC, AND OTHER TOXICITY

Guideline No.	Study Type	Results
870.1100	Acute Oral	LD_{50} > 5,000 mg/kg (limit dose), toxicity category IV
870.1200	Acute Dermal	LD_{50} > 4,000 mg/kg (twice the limit dose), toxicity category III
870.1300	Acute Inhalation	LC_{50} > 6.3 mg/L, toxicity category IV
870.2400	Primary Eye Irritation	moderately irritating, toxicity category III
870.2500	Primary Skin Irritation	Non-irritating, toxicity category IV
870.2600	Dermal Sensitization	Non sensitizer
870.3100	90–Day oral toxicity rodents	NOAEL = 1,661 mg/kg/day, Highest Dose Tested (HDT)
870.3150	90–Day oral toxicity in nonrodents	NOAEL = 1,333 mg/kg/day, HDT
870.3200	21/28–Day dermal toxicity	NOAEL = 1,000 mg/kg/day, HDT
870.3700	Prenatal developmental in rodents	Maternal and Developmental NOAEL = 1,000 mg/kg/day, HDT
870.3700	Prenatal developmental in nonrodents	Maternal and Developmental NOAEL = 900 mg/kg/day, HDT
870.3800	Reproduction and fertility effects	Parental/Systemic, Reproductive and Offspring NOAEL = 1469 mg/kg/day, HDT
870.4100 870.4200	Chronic toxicity and Carcinogenicity rodents.	NOAEL = 1,068 mg/kg/day, HDT; no evidence of carcinogenicity
870.4100	Chronic toxicity dogs	NOAEL = 1,165 mg/kg/day, HDT
870.4300	Carcinogenicity mice	NOAEL = 1,053 mg/kg/day, HDT; no evidence of carcinogenicity
870.5100	Gene Mutation	Negative
870.5375	Cytogenetics	Negative
870.5385	Other Effects	Negative

TABLE 1.—SUBCHRONIC, CHRONIC, AND OTHER TOXICITY—Continued

Guideline No.	Study Type	Results
870.7485	Metabolism and pharmacokinetics	Rapidly excreted primarily in the urine following intravenous administration, and in the urine and feces following oral administration, mainly as unchanged parent.

C. Exposure Assessment

1. *Dietary exposure from food and feed uses.* Tolerances have been established (40 CFR 180.508) for the residues of imazamox, in or on the raw agricultural commodity soybeans. Due to low toxicity, it was determined that a dietary risk assessment of imazamox in food is not needed and, therefore, none was conducted.

i. *Acute exposure.* Acute dietary risk assessments are performed for a food-use pesticide if a toxicological study has indicated the possibility of an effect of concern occurring as a result of a one day or single exposure. No appropriate endpoint attributable to a single exposure (dose) was identified in the imazamox toxicity database including oral developmental toxicity studies in rats and rabbits.

ii. *Chronic exposure.* There were no observed adverse effects at the highest dose tested (1,000 mg/kg/day or higher) in any of the subchronic or chronic toxicity tests conducted and the August 1998 OPPTS Series 870 Harmonized Test Guidelines for health effects recommend for subchronic and chronic testing the highest dose tested should not exceed 1,000 mg/kg/day using the procedures described for these studies, unless potential human exposure data indicate the need for higher doses. When imazamox was tested up to or above the limit dose, no significant adverse effects were observed. Therefore, it was determined that a chronic dietary risk assessment of imazamox in food is not needed and, therefore, none was conducted.

2. *Dietary exposure from drinking water.* The Agency uses the First Index Reservoir Screening Tool (FIRST) or the Pesticide Root Zone/Exposure Analysis Modeling System (PRZM/EXAMS), to produce estimates of pesticide concentrations in an index reservoir. The screening concentration in ground water (SCI-GROW) model is used to predict pesticide concentrations in shallow groundwater. For a screening-level assessment for surface water EPA will use FIRST (a tier 1 model) before using PRZM/EXAMS (a tier 2 model). The FIRST model is a subset of the PRZM/EXAMS model that uses a specific high-end runoff scenario for pesticides. While both FIRST and PRZM/EXAMS incorporate an index reservoir environment, the PRZM/EXAMS model includes a percent crop area factor as an adjustment to account for the maximum percent crop coverage within a watershed or drainage basin.

None of these models include consideration of the impact processing (mixing, dilution, or treatment) of raw water for distribution as drinking water would likely have on the removal of pesticides from the source water. The primary use of these models by the Agency at this stage is to provide a coarse screen for sorting out pesticides for which it is highly unlikely that drinking water concentrations would ever exceed human health levels of concern.

Based on the FIRST and SCI-GROW models the estimated environmental concentrations (EECs) of imazamox for acute exposures are estimated to be 32 parts per billion (ppb) for surface water and 0.62 ppb for ground water. The EECs for chronic exposures are estimated to be 3.4 ppb for surface water and 0.62 ppb for ground water. These concentrations were compared to the lowest high dose tested in the toxicity studies (900 mg/kg) divided by an uncertainty factor of 100, i.e., 9 mg/kg. For chronic exposure in surface water, the EEC of 3.4 ppb is 5/10,000% of 9 mg/kg. For acute exposure in surface water, the EEC of 32 ppb is 4/1,000% of 9 mg/kg. For chronic and acute exposure in ground water, the EEC of 0.62 ppb is 7/10,000% of 9 mg/kg. Because the concentration of imazamox in drinking water are much smaller than 9 mg/kg, the contribution of consumption of imazamox via drinking water to total dietary consumption of imazamox (food plus water) is not significant.

3. *From non-dietary exposure.* The term ''residential exposure'' is used in this document to refer to non-occupational, non-dietary exposure (e.g., for lawn and garden pest control, indoor pest control, termiticides, and flea and tick control on pets). Imazamox is not registered for use on any sites that would result in residential exposure.

4. *Cumulative exposure to substances with a common mechanism of toxicity.* Section 408(b)(2)(D)(v) requires that, when considering whether to establish, modify, or revoke a tolerance, the Agency consider ''available information'' concerning the cumulative effects of a particular pesticide's residues and ''other substances that have a common mechanism of toxicity.''

EPA does not have, at this time, available data to determine whether imazamox has a common mechanism of toxicity with other substances or how to include this pesticide in a cumulative risk assessment. Unlike other pesticides for which EPA has followed a cumulative risk approach based on a common mechanism of toxicity, imazamox does not appear to produce a toxic metabolite produced by other substances. For the purposes of this tolerance action, therefore, EPA has not assumed that imazamox has a common mechanism of toxicity with other substances. For information regarding EPA's efforts to determine which chemicals have a common mechanism of toxicity and to evaluate the cumulative effects of such chemicals, see the final rule for Bifenthrin Pesticide Tolerances (62 FR 62961, November 26, 1997).

D. Safety Factor for Infants and Children

1. *In general.* FFDCA section 408 provides that EPA shall apply an additional tenfold margin of safety for infants and children in the case of threshold effects to account for prenatal and postnatal toxicity and the completeness of the database on toxicity and exposure unless EPA determines that a different margin of safety will be safe for infants and children.

2. *Prenatal and postnatal sensitivity.* No significant toxicity or pre- or post-natal toxicity was seen in any of the studies conducted with imazamox.

3. *Conclusion.* Due to its low toxicity a risk assessment using a safety factor approach was not conducted for imazamox. For similar reasons, it would not be appropriate to use an additional 10x safety factor to protect infants and children.

E. Aggregate Risks and Determination of Safety

1. *Acute risk.* Since the acute toxicity is low (toxicity categories III and IV) for all tests conducted, the occurrence of an effect of concern as a result of a one day or single exposure is highly unlikely. It

was determined that contribution of additional dietary risk due to drinking water consumption is insignificant as described in section C. 2. above.

2. *Chronic risk*. There were no observed adverse effects at the highest dose tested (1,000 mg/kg/day or higher) in any of the subchronic or chronic toxicity tests conducted and the August 1998 OPPTS Series 870 Harmonized Test Guidelines for health effects recommend for subchronic and chronic testing the highest dose tested should not exceed 1000 mg/kg/day using the procedures described for these studies, unless potential human exposure data indicate the need for higher doses. When imazamox was tested up to or above the limit dose, no significant adverse effects were observed. Therefore, it was determined that a chronic dietary risk assessment of imazamox in food is not needed and, therefore, none was conducted.

3. *Determination of safety*. Based on the low toxicity of imazamox and the rationales described above, EPA concludes that there is a reasonable certainty that no harm will result to the general population, and to infants and children from aggregate exposure to imazamox residues.

IV. Other Considerations

A. Analytical Enforcement Methodology

The method may be requested from Francis Griffith, Analytical Chemistry Branch, Environmental Science Center, 701 Mapes Road, Fort George G. Mead, Maryland, 20755–5350; telephone number: (410) 305–2905; e-mail address: griffith.francis@epa.gov.

B. International Residue Limits

There are no established or proposed Codex Maximum Residue Limits (MRLs) for imazamox.

V. Conclusion

Therefore, tolerances are established for residues of the herbicide imazamox, (±)-2-[4,5-dihydro-4-methyl-4-(1-methylethyl)-5-oxo-1H-imidazol-2-yl]-5-(methoxymethyl)-3-pyridinecarboxylic acid, in or on the raw agricultural commodities: vegetable, legume, group at 0.05 ppm; canola, seed at 0.05 ppm. Tolerances are established for the combined residues of the herbicide imazamox, and its metabolite, AC263284 (±)-2-[4,5-dihydro-4-methyl-4-(1-methylethyl)-5-oxo-1H-imidazol-2-yl]-5-(hydroxymethyl)-3-pyridinecarboxylic acid in or on the following raw agricultural commodities wheat, grain, forage and hay at 0.3 ppm, wheat, straw at 0.2 ppm, wheat, bran at 1.0 ppm, wheat, shorts at 0.8 ppm, and wheat, germ at 0.6 ppm. Tolerances are established for the combined residues of the herbicide imazamox, and its metabolite, AC263284 (free and conjugated), and AC312622, (±)-2-[4,5-dihydro-4-methyl-4-(1-methylethyl)-5-oxo-1H-imidazol-2-yl]-3,5-pyridinecarboxylic acid in or on the following raw agricultural commodities: alfalfa, seed at 0.4 ppm, alfalfa, forage at 2.0 ppm and alfalfa, hay at 4.0 ppm respectively

VI. Objections and Hearing Requests

Under section 408(g) of the FFDCA, as amended by the FQPA, any person may file an objection to any aspect of this regulation and may also request a hearing on those objections. The EPA procedural regulations which govern the submission of objections and requests for hearings appear in 40 CFR part 178. Although the procedures in those regulations require some modification to reflect the amendments made to the FFDCA by the FQPA of 1996, EPA will continue to use those procedures, with appropriate adjustments, until the necessary modifications can be made. The new section 408(g) provides essentially the same process for persons to ''object'' to a regulation for an exemption from the requirement of a tolerance issued by EPA under new section 408(d), as was provided in the old FFDCA sections 408 and 409. However, the period for filing objections is now 60 days, rather than 30 days.

A. What Do I Need to Do to File an Objection or Request a Hearing?

You must file your objection or request a hearing on this regulation in accordance with the instructions provided in this unit and in 40 CFR part 178. To ensure proper receipt by EPA, you must identify docket control number OPP–301205 in the subject line on the first page of your submission. All requests must be in writing, and must be mailed or delivered to the Hearing Clerk on or before February 25, 2002.

1. *Filing the request*. Your objection must specify the specific provisions in the regulation that you object to, and the grounds for the objections (40 CFR 178.25). If a hearing is requested, the objections must include a statement of the factual issues(s) on which a hearing is requested, the requestor's contentions on such issues, and a summary of any evidence relied upon by the objector (40 CFR 178.27). Information submitted in connection with an objection or hearing request may be claimed confidential by marking any part or all of that information as CBI. Information so marked will not be disclosed except in accordance with procedures set forth in 40 CFR part 2. A copy of the information that does not contain CBI must be submitted for inclusion in the public record. Information not marked confidential may be disclosed publicly by EPA without prior notice.

Mail your written request to: Office of the Hearing Clerk (1900), Environmental Protection Agency, 1200 Pennsylvania Ave., NW., Washington, DC 20460. You may also deliver your request to the Office of the Hearing Clerk in Rm. C400, Waterside Mall, 401 M St., SW., Washington, DC 20460. The Office of the Hearing Clerk is open from 8 a.m. to 4 p.m., Monday through Friday, excluding legal holidays. The telephone number for the Office of the Hearing Clerk is (202) 260–4865.

2. *Tolerance fee payment*. If you file an objection or request a hearing, you must also pay the fee prescribed by 40 CFR 180.33(i) or request a waiver of that fee pursuant to 40 CFR 180.33(m). You must mail the fee to: EPA Headquarters Accounting Operations Branch, Office of Pesticide Programs, P.O. Box 360277M, Pittsburgh, PA 15251. Please identify the fee submission by labeling it ''Tolerance Petition Fees.''

EPA is authorized to waive any fee requirement ''when in the judgement of the Administrator such a waiver or refund is equitable and not contrary to the purpose of this subsection.'' For additional information regarding the waiver of these fees, you may contact James Tompkins by phone at (703) 305–5697, by e-mail at tompkins.jim@epa.gov, or by mailing a request for information to Mr. Tompkins at Registration Division (7505C), Office of Pesticide Programs, Environmental Protection Agency, 1200 Pennsylvania Ave., NW., Washington, DC 20460.

If you would like to request a waiver of the tolerance objection fees, you must mail your request for such a waiver to: James Hollins, Information Resources and Services Division (7502C), Office of Pesticide Programs, Environmental Protection Agency, 1200 Pennsylvania Ave., NW., Washington, DC 20460.

3. *Copies for the Docket*. In addition to filing an objection or hearing request with the Hearing Clerk as described in Unit VI.A., you should also send a copy of your request to the PIRIB for its inclusion in the official record that is described in Unit I.B.2. Mail your copies, identified by docket control number OPP–301205, to: Public Information and Records Integrity Branch, Information Resources and Services Division (7502C), Office of Pesticide Programs, Environmental Protection Agency, 1200 Pennsylvania Ave., NW., Washington, DC 20460. In person or by courier, bring a copy to the

location of the PIRIB described in Unit I.B.2. You may also send an electronic copy of your request via e-mail to: opp-docket@epa.gov. Please use an ASCII file format and avoid the use of special characters and any form of encryption. Copies of electronic objections and hearing requests will also be accepted on disks in WordPerfect 6.1/8.0 or ASCII file format. Do not include any CBI in your electronic copy. You may also submit an electronic copy of your request at many Federal Depository Libraries.

B. When Will the Agency Grant a Request for a Hearing?

A request for a hearing will be granted if the Administrator determines that the material submitted shows the following: There is a genuine and substantial issue of fact; there is a reasonable possibility that available evidence identified by the requestor would, if established resolve one or more of such issues in favor of the requestor, taking into account uncontested claims or facts to the contrary; and resolution of the factual issues(s) in the manner sought by the requestor would be adequate to justify the action requested (40 CFR 178.32).

VII. Regulatory Assessment Requirements

This final rule establishes a tolerance under FFDCA section 408(d) in response to a petition submitted to the Agency. The Office of Management and Budget (OMB) has exempted these types of actions from review under Executive Order 12866, entitled *Regulatory Planning and Review* (58 FR 51735, October 4, 1993). Because this rule has been exempted from review under Executive Order 12866 due to its lack of significance, this rule is not subject to Executive Order 13211, *Actions Concerning Regulations That Significantly Affect Energy Supply, Distribution, or Use* (66 FR 28355, May 22, 2001). This final rule does not contain any information collections subject to OMB approval under the Paperwork Reduction Act (PRA), 44 U.S.C. 3501 *et seq.*, or impose any enforceable duty or contain any unfunded mandate as described under Title II of the Unfunded Mandates Reform Act of 1995 (UMRA) (Public Law 104–4). Nor does it require any special considerations under Executive Order 12898, entitled *Federal Actions to Address Environmental Justice in Minority Populations and Low-Income Populations* (59 FR 7629, February 16, 1994); or OMB review or any Agency action under Executive Order 13045, entitled *Protection of Children from Environmental Health Risks and Safety Risks* (62 FR 19885, April 23, 1997). This action does not involve any technical standards that would require Agency consideration of voluntary consensus standards pursuant to section 12(d) of the National Technology Transfer and Advancement Act of 1995 (NTTAA), Public Law 104–113, section 12(d) (15 U.S.C. 272 note). Since tolerances and exemptions that are established on the basis of a petition under FFDCA section 408(d), such as the tolerance in this final rule, do not require the issuance of a proposed rule, the requirements of the Regulatory Flexibility Act (RFA) (5 U.S.C. 601 *et seq.*) do not apply. In addition, the Agency has determined that this action will not have a substantial direct effect on States, on the relationship between the national government and the States, or on the distribution of power and responsibilities among the various levels of government, as specified in Executive Order 13132, entitled *Federalism*(64 FR 43255, August 10, 1999). Executive Order 13132 requires EPA to develop an accountable process to ensure ''meaningful and timely input by State and local officials in the development of regulatory policies that have federalism implications.'' ''Policies that have federalism implications'' is defined in the Executive Order to include regulations that have ''substantial direct effects on the States, on the relationship between the national government and the States, or on the distribution of power and responsibilities among the various levels of government.'' This final rule directly regulates growers, food processors, food handlers and food retailers, not States. This action does not alter the relationships or distribution of power and responsibilities established by Congress in the preemption provisions of FFDCA section 408(n)(4). For these same reasons, the Agency has determined that this rule does not have any ''tribal implications'' as described in Executive Order 13175, entitled *Consultation and Coordination with Indian Tribal Governments* (65 FR 67249, November 6, 2000). Executive Order 13175, requires EPA to develop an accountable process to ensure ''meaningful and timely input by tribal officials in the development of regulatory policies that have tribal implications.'' ''Policies that have tribal implications'' is defined in the Executive Order to include regulations that have ''substantial direct effects on one or more Indian tribes, on the relationship between the Federal government and the Indian tribes, or on the distribution of power and responsibilities between the Federal government and Indian tribes.'' This rule will not have substantial direct effects on tribal governments, on the relationship between the Federal government and Indian tribes, or on the distribution of power and responsibilities between the Federal government and Indian tribes, as specified in Executive Order 13175. Thus, Executive Order 13175 does not apply to this rule.

VIII. Submission to Congress and the Comptroller General

The Congressional Review Act, 5 U.S.C. 801 *et seq.*, as added by the Small Business Regulatory Enforcement Fairness Act of 1996, generally provides that before a rule may take effect, the agency promulgating the rule must submit a rule report, which includes a copy of the rule, to each House of the Congress and to the Comptroller General of the United States. EPA will submit a report containing this rule and other required information to the U.S. Senate, the U.S. House of Representatives, and the Comptroller General of the United States prior to publication of this final rule in the **Federal Register**. This final rule is not a ''major rule'' as defined by 5 U.S.C. 804(2).

List of Subjects in 40 CFR Part 180

Environmental protection, Administrative practice and procedure, Agricultural commodities, Pesticides and pests, Reporting and recordkeeping requirements.

Dated: December 18, 2001.

Peter Caulkins,

Acting Director, Registration Division, Office of Pesticide Programs.

Therefore, 40 CFR chapter I is amended as follows:

PART 180—[AMENDED]

1. The authority citation for part 180 continues to read as follows:

Authority: 21 U.S.C. 321(q), 346(a) and 371.

2. Section 180.508 is amended by revising paragraph (a) to read as follows:

§ 180.508 Imazamox; tolerances for residues.

(a) *General.* (1) Tolerances are established for residues of the herbicide imazamox, (±)2-[4,5-dihydro-4-methyl-4-(1-methylethyl)-5-oxo-1H-imidazol-2-yl]-5-(methoxymethyl)-3-pyridinecarboxylic acid in or on the raw agricultural commodities:

Commodity	Parts per million
Canola, seed	0.05
Vegetable, legume, group	0.05

(2) Tolerances are established for the combined residues of the herbicide imazamox, and its metabolite AC263284 [(±)2-[4,5-dihydro-4-methyl-4-(1-methylethyl)-5-oxo-1H-imidazol-2-yl]-5-(hydroxymethyl)-3-pyridinecarboxylic acid in or on the raw agricultural commodities:

Commodity	Parts per million
Wheat, grain	0.30
Wheat, forage	0.30
Wheat, hay	0.30
Wheat, straw	0.20
Wheat, bran	1.0
Wheat, shorts	0.80
Wheat, germ	0.60

(3) Tolerances are established for the combined residues of the herbicide imazamox, and its metabolite AC263284 (free and conjugated), and AC312622, [(±)-2-[4,5-dihydro-4-methyl-4-(1-methylethyl)-5-oxo-1H-imidazol-2-yl]-3,5-pyridinecarboxylic acid in or on the raw agricultural commodities:

Commodity	Parts per million
Alfalfa, seed	0.40
Alfalfa, forage	2.0
Alfalfa, hay	4.0

* * * * *

[FR Doc. 01–31799 Filed 12–26–01; 8:45 am]

BILLING CODE 6560–50–S

ENVIRONMENTAL PROTECTION AGENCY

40 CFR Part 180

[OPP–301197; FRL–6816–1]

RIN 2070–AB78

Halosulfuron-methyl; Pesticide Tolerances for Emergency Exemptions

AGENCY: Environmental Protection Agency (EPA).

ACTION: Final rule.

SUMMARY: This regulation establishes a time-limited tolerance for residues of Halosulfuron-methyl in or on asparagus. This action is in response to EPA's granting of an emergency exemption under section 18 of the Federal Insecticide, Fungicide, and Rodenticide Act (FIFRA) authorizing use of the pesticide on asparagus. This regulation establishes a maximum permissible level for residues of halosulfuron-methyl in this food commodity. The tolerance will expire and is revoked on December 31, 2003.

DATES: This regulation is effective December 27, 2001. Objections and requests for hearings, identified by docket control number OPP–301197, must be received by EPA on or before February 25, 2002.

ADDRESSES: Written objections and hearing requests may be submitted by mail, in person, or by courier. Please follow the detailed instructions for each method as provided in Unit VII. of the **SUPPLEMENTARY INFORMATION**. To ensure proper receipt by EPA, your objections and hearing requests must identify docket control number OPP–301197 in the subject line on the first page of your response.

FOR FURTHER INFORMATION CONTACT: By mail: Meredith Laws, Registration Division (7505C), Office of Pesticide Programs, Environmental Protection Agency, 1200 Pennsylvania Ave., NW., Washington, DC 20460; telephone number: (703) 308–9366; and e-mail address: laws.meredith@epa.gov.

SUPPLEMENTARY INFORMATION:

I. General Information

A. Does this Action Apply to Me?

You may be potentially affected by this action if you are an agricultural producer, food manufacturer, or pesticide manufacturer. Potentially affected categories and entities may include, but are not limited to:

Categories	NAICS Codes	Examples of Potentially Affected Entities
Industry	111	Crop production
	112	Animal production
	311	Food manufacturing
	32532	Pesticide manufacturing

This listing is not intended to be exhaustive, but rather provides a guide for readers regarding entities likely to be affected by this action. Other types of entities not listed in the table could also be affected. The North American Industrial Classification System (NAICS) codes have been provided to assist you and others in determining whether or not this action might apply to certain entities. If you have questions regarding the applicability of this action to a particular entity, consult the person listed under **FOR FURTHER INFORMATION CONTACT**.

B. How Can I Get Additional Information, Including Copies of This Document and Other Related Documents?

1. *Electronically*. You may obtain electronic copies of this document, and certain other related documents that might be available electronically, from the EPA Internet Home Page at http://www.epa.gov/. To access this document, on the Home Page select ''Laws and Regulations,'' ''Regulations and Proposed Rules,'' and then look up the entry for this document under the ''**Federal Register**—Environmental Documents.'' You can also go directly to the **Federal Register** listings at http://www.epa.gov/fedrgstr/. A frequently updated electronic version of 40 CFR part 180 is available at http://www.access.gpo.gov/nara/cfr/cfrhtml_180/Title_40/40cfr180_00.html, a beta site currently under development.

2. *In person*. The Agency has established an official record for this action under docket control number OPP–301197. The official record consists of the documents specifically referenced in this action, and other information related to this action, including any information claimed as Confidential Business Information (CBI). This official record includes the documents that are physically located in the docket, as well as the documents that are referenced in those documents. The public version of the official record does not include any information claimed as CBI. The public version of the official record, which includes printed, paper versions of any electronic comments submitted during an applicable comment period is available for inspection in the Public Information and Records Integrity Branch (PIRIB), Rm. 119, Mall #2, 1921 Jefferson Davis Hwy., Arlington, VA, from 8:30 a.m. to 4 p.m., Monday through Friday, excluding legal holidays. The PIRIB telephone number is (703) 305–5805.

II. Background and Statutory Findings

EPA, on its own initiative, in accordance with sections 408(e) and 408(l)(6) of the Federal Food, Drug, and Cosmetic Act (FFDCA), 21 U.S.C. 346a, is establishing a tolerance for residues of the herbicide halosulfuron-methyl, methyl 5-[(4,6-dimethoxy-2-pyrimidinyl) amino]carbonylaminosulfonyl-3-chloro-1-methyl-1H-pyrazole-4-carboxylate, in or on asparagus at 2.0 parts per million (ppm). This tolerance will expire and is revoked on 12/31/03. EPA will publish a document in the **Federal Register** to remove the revoked tolerance from the Code of Federal Regulations (CFR).

Section 408(l)(6) of the FFDCA requires EPA to establish a time-limited tolerance or exemption from the requirement for a tolerance for pesticide chemical residues in food that will result from the use of a pesticide under an emergency exemption granted by EPA under section 18 of FIFRA. Such tolerances can be established without providing notice or period for public comment. EPA does not intend for its actions on section 18 related tolerances to set binding precedents for the application of section 408 and the new safety standard to other tolerances and exemptions. Section 408(e) of the FFDCA allows EPA to establish a tolerance or an exemption from the requirement of a tolerance on its own initiative, i.e., without having received any petition from an outside party.

Section 408(b)(2)(A)(i) of the FFDCA allows EPA to establish a tolerance (the legal limit for a pesticide chemical residue in or on a food) only if EPA determines that the tolerance is ''safe.'' Section 408(b)(2)(A)(ii) defines ''safe'' to mean that ''there is a reasonable certainty that no harm will result from aggregate exposure to the pesticide chemical residue, including all anticipated dietary exposures and all other exposures for which there is reliable information.'' This includes exposure through drinking water and in residential settings, but does not include occupational exposure. Section 408(b)(2)(C) requires EPA to give special consideration to exposure of infants and children to the pesticide chemical residue in establishing a tolerance and to ''ensure that there is a reasonable certainty that no harm will result to infants and children from aggregate exposure to the pesticide chemical residue. . . .''

Section 18 of FIFRA authorizes EPA to exempt any Federal or State agency from any provision of FIFRA, if EPA determines that ''emergency conditions exist which require such exemption.'' This provision was not amended by the Food Quality Protection Act (FQPA). EPA has established regulations governing such emergency exemptions in 40 CFR part 166.

III. Emergency Exemption for Halosulfuron-methyl on Asparagus and FFDCA Tolerances

Washington, Idaho and Oregon requested the use of halosulfuron-methyl to control nutsedge infesting asparagus fields. Michigan requested the use of halosulfuron-methyl to control nutsedge and pigweed infesting asparagus fields. In the Pacific Northwest nutsedge has spread throughout the asparagus growing region and has been declared a Class B noxious weed in Washington. Asparagus growers are especially vulnerable to nutsedge because of the difficulty in controlling a perennial monocot weed in a perennial monocot crop. The information provided by the four applicant states indicates that nutsedge is reducing asparagus yields and reducing the life span of the crop. EPA agrees that heavily infested fields can have severe yield losses. Additionally, EPA expects that yield reductions in Michigan due to redroot pigweed could be quite high due to coverage of the crop during the harvest period. EPA has authorized under FIFRA section 18 the use of halosulfuron-methyl on asparagus for control of nutsedge in Washington, Idaho, Oregon and Michigan and also for control of pigweed in Michigan. After having reviewed the submissions, EPA concurs that emergency conditions exist for these States.

As part of its assessment of this emergency exemption, EPA assessed the potential risks presented by residues of halosulfuron-methyl in or on asparagus. In doing so, EPA considered the safety standard in FFDCA section 408(b)(2), and EPA decided that the necessary tolerance under FFDCA section 408(l)(6) would be consistent with the safety standard and with FIFRA section 18. Consistent with the need to move quickly on the emergency exemption in order to address an urgent non-routine situation and to ensure that the resulting food is safe and lawful, EPA is issuing this tolerance without notice and opportunity for public comment as provided in section 408(l)(6). Although this tolerance will expire and is revoked on December 31, 2003, under FFDCA section 408(l)(5), residues of the pesticide not in excess of the amounts specified in the tolerance remaining in or on asparagus after that date will not be unlawful, provided the pesticide is applied in a manner that was lawful under FIFRA, and the residues do not exceed a level that was authorized by this tolerance at the time of that application. EPA will take action to revoke this tolerance earlier if any experience with, scientific data on, or other relevant information on this pesticide indicate that the residues are not safe.

Because this tolerance is being approved under emergency conditions, EPA has not made any decisions about whether halosulfuron-methyl meets EPA's registration requirements for use on asparagus or whether a permanent tolerance for this use would be appropriate. Under these circumstances, EPA does not believe that this tolerance serves as a basis for registration of halosulfuron-methyl by a State for special local needs under FIFRA section 24(c). Nor does this tolerance serve as the basis for any State other than Washington, Idaho, Oregon and Michigan to use this pesticide on this crop under section 18 of FIFRA without following all provisions of EPA's regulations implementing section 18 as identified in 40 CFR part 166. For additional information regarding the emergency exemption for halosulfuron-methyl, contact the Agency's Registration Division at the address provided under **FOR FURTHER INFORMATION CONTACT**.

IV. Aggregate Risk Assessment and Determination of Safety

EPA performs a number of analyses to determine the risks from aggregate exposure to pesticide residues. For further discussion of the regulatory requirements of section 408 and a complete description of the risk assessment process, see the final rule on Bifenthrin Pesticide Tolerances (62 FR 62961, November 26, 1997) (FRL–5754–7).

Consistent with section 408(b)(2)(D), EPA has reviewed the available scientific data and other relevant information in support of this action. EPA has sufficient data to assess the hazards of halosulfuron-methyl and to make a determination on aggregate exposure, consistent with section 408(b)(2), for a time-limited tolerance for residues of halosulfuron-methyl in or on asparagus at 2.0 ppm. EPA's assessment of the dietary exposures and risks associated with establishing the tolerance follows.

A. Toxicological Endpoints

The dose at which no adverse effects are observed (the NOAEL) from the toxicology study identified as appropriate for use in risk assessment is used to estimate the toxicological endpoint. However, the lowest dose at which adverse effects of concern are identified (the LOAEL) is sometimes used for risk assessment if no NOAEL was achieved in the toxicology study selected. An uncertainty factor (UF) is applied to reflect uncertainties inherent in the extrapolation from laboratory animal data to humans and in the variations in sensitivity among members of the human population as well as other unknowns. An UF of 100 is routinely used, 10X to account for interspecies differences and 10X for intraspecies differences.

For dietary risk assessment (other than cancer) the Agency uses the UF to calculate an acute or chronic reference

dose (acute RfD or chronic RfD) where the RfD is equal to the NOAEL divided by the appropriate UF (RfD = NOAEL/UF). Where an additional safety facto is retained due to concerns unique to the FQPA, this additional factor is applied to the RfD by dividing the RfD by such additional factor. The acute or chronic Population Adjusted Dose (aPAD or cPAD) is a modification of the RfD to accommodate this type of FQPA Safety Factor.

For non-dietary risk assessments (other than cancer) the UF is used to determine the level of concern (LOC). For example, when 100 is the appropriate UF (10X to account for interspecies differences and 10X for intraspecies differences) the LOC is 100. To estimate risk, a ratio of the NOAEL to exposures (margin of exposure (MOE) = NOAEL/exposure) is calculated and compared to the LOC.

The linear default risk methodology (Q*) is the primary method currently used by the Agency to quantify carcinogenic risk. The Q* approach assumes that any amount of exposure will lead to some degree of cancer risk. A Q* is calculated and used to estimate risk which represents a probability of occurrence of additional cancer cases (e.g., risk is expressed as 1×10^{-6} or one in a million). Under certain specific circumstances, MOE calculations will be used for the carcinogenic risk assessment. In this non-linear approach, a ''point of departure'' is identified below which carcinogenic effects are not expected. The point of departure is typically a NOAEL based on an endpoint related to cancer effects though it may be a different value derived from the dose response curve. To estimate risk, a ratio of the point of departure to exposure (MOE_{cancer} = point of departure/exposures) is calculated. A summary of the toxicological endpoints for halosulfuron-methyl used for human risk assessment is shown in the following Table 1:

TABLE 1.—SUMMARY OF TOXICOLOGICAL DOSE AND ENDPOINTS FOR HALOSULFURON-METHYL FOR USE IN HUMAN RISK ASSESSMENT

Exposure Scenario	Dose Used in Risk Assessment, UF	FQPA SF* and Level of Concern for Risk Assessment	Study and Toxicological Effects
Acute dietary (Females 13+, Infants and Children)	NOAEL = 50 mg/kg/day UF = 100 Acute RfD = 0.5 mg/kg/day	FQPA SF = 1x aPAD = acute RfD ÷ FQPA SF = 0.5 mg/kg/day	Developmental - rabbit LOAEL = 150 mg/kg/day based on decreased mean litter size, increased resorptions, and increased postimplantation loss.
Acute dietary (Adult male)	None	No appropriate endpoint was selected	A dose and endpoint was not identified for this subpopulation since there were no toxicological effects applicable to adult males and attributable to a single exposure (dose) observed in oral toxicity studies including the developmental toxicity studies in rats and rabbits.
Chronic dietary all populations	NOAEL= 10 mg/kg/day UF = 100 Chronic RfD = 0.1 mg/kg/day	FQPA SF = 1x cPAD = chronic RfD ÷ FQPA SF = 0.1 mg/kg/day	Chronic toxicity - dog LOAEL = 40 mg/kg/day based on decrease in body weight gain and alterations in hematology and clinical chemistry parameters
Short-term dermal (1 to 7 days) (Residential)	Oral study NOAEL= 50 mg/kg/day (dermal absorption rate = 75%)	LOC for MOE = 100 (Residential)	Developmental - rabbit LOAEL = 150 mg/kg/day based on decreased mean litter size, increased resorptions, and increased postimplantation loss
Intermediate-term dermal (1 week to several months) (Residential)	Oral study NOAEL= 10 mg/kg/day (dermal absorption rate = 75%	LOC for MOE = 100 (Residential)	Chronic toxicity - dog LOAEL = 40 mg/kg/day based on decrease in body weight gain during weeks 0–13
Long-term dermal (several months to lifetime) (Residential)	Oral study NOAEL= 10 mg/kg/day (dermal absorption rate = 75% when appropriate)	LOC for MOE = 100 (Residential)	Chronic toxicity - dog LOAEL = 40 mg/kg/day based on decrease in body weight gain and alterations inhematology and clinical chemistry parameters
Inhalation (any time period) (Residential)	None	-	Low toxicity and use pattern do not indicate a need for risk assessment for this route.
Cancer (oral, dermal, inhalation)	-	-	Classified as a ''Not-likely'' human carcinogen based on the lack of evidence of carcinogenicity in male and female mice and rats.

* The reference to the FQPA Safety Factor refers to any additional safety factor retained due to concerns unique to the FQPA.

B. Exposure Assessment

1. *Dietary exposure from food and feed uses.* Tolerances have been established (40 CFR 180.479) for the residues of halosulfuron-methyl, in or on a variety of raw agricultural commodities. The established tolerances include tree nuts (crop group 14); sugarcane; corn rice and cotton, and their associated commodities. Additionally, tolerances are established for residues of halosulfuron-methyl and its metabolites determined as 3-chloro-1-methyl-5-sulfamoylpyrazole-4-carboxylic acid (also referred to as CSA, expressed as parent equivalents) in/on meat by-products of cattle, goats, hogs, horses and sheep. Risk assessments were conducted by EPA to assess dietary exposures from halosulfuron-methyl in food as follows:

i. *Acute exposure.* Acute dietary risk assessments are performed for a food-use pesticide if a toxicological study has indicated the possibility of an effect of concern occurring as a result of a one day or single exposure. The Dietary Exposure Evaluation Model (DEEM®) analysis evaluated the individual food consumption as reported by respondents in the USDA 1989–1992 nationwide Continuing Surveys of Food Intake by Individuals (CSFII) and accumulated exposure to the chemical for each commodity. The following assumptions were made for the acute exposure assessments: A Tier 1 acute dietary exposure analysis was conducted. The assumptions of the Tier 1 analysis were tolerance level residues and 100 percent crop-treated for all commodities for which halosulfuron-methyl tolerances are established and for the section 18 subject crop (asparagus). Percent crop treated and anticipated residues were not used.

ii. *Chronic exposure.* In conducting this chronic dietary risk assessment the DEEM® analysis evaluated the individual food consumption as reported by respondents in the USDA 1989–1992 nationwide CSFII and accumulated exposure to the chemical for each commodity. The following assumptions were made for the chronic exposure assessments: A Tier 1 chronic dietary exposure analysis was conducted. The assumptions of this Tier 1 analysis were tolerance level residues and 100 percent crop-treated for all commodities for which halosulfuron-methyl tolerances are established and for the subject section 18 crop (asparagus). Percent crop treated and anticipated residues were not used.

iii. *Cancer.* There is no evidence of carcinogenicity for halosulfuron-methyl in the mouse or rat. EPA has classified halosulfuron-methyl as a ''Not-Likely'' human carcinogen.

2. *Dietary exposure from drinking water.* The Agency lacks sufficient monitoring exposure data to complete a comprehensive dietary exposure analysis and risk assessment for halosulfuron-methyl in drinking water. Because the Agency does not have comprehensive monitoring data, drinking water concentration estimates are made by reliance on simulation or modeling taking into account data on the physical characteristics of halosulfuron-methyl.

The Agency uses the First Index Reservoir Screening Tool (FIRST) or the Pesticide Root Zone/Exposure Analysis Modeling System (PRZM/EXAMS) to produce estimates of pesticide concentrations in an index reservoir. The screening concentration in ground water (SCI-GROW) model is used to predict pesticide concentrations in shallow ground water. For a screening-level assessment for surface water EPA will generally use FIRST (a tier 1 model) before using PRZM/EXAMS (a tier 2 model). The FIRST model is a subset of the PRZM/EXAMS model that uses a specific high-end runoff scenario for pesticides. While both FIRST and PRZM/EXAMS incorporate an index reservoir environment, the PRZM/EXAMS model includes a percent crop area factor as an adjustment to account for the maximum percent crop coverage within a watershed or drainage basin.

None of these models include consideration of the impact processing (mixing, dilution, or treatment) of raw water for distribution as drinking water would likely have on the removal of pesticides from the source water. The primary use of these models by the Agency at this stage is to provide a coarse screen for sorting out pesticides for which it is highly unlikely that drinking water concentrations would ever exceed human health levels of concern.

Since the models used are considered to be screening tools in the risk assessment process, the Agency does not use estimated environmental concentrations (EECs) from these models to quantify drinking water exposure and risk as a %RfD or %PAD. Instead drinking water levels of comparison (DWLOCs) are calculated and used as a point of comparison against the model estimates of a pesticide's concentration in water. DWLOCs are theoretical upper limits on a pesticide's concentration in drinking water in light of total aggregate exposure to a pesticide in food, and from residential uses. Since DWLOCs address total aggregate exposure to halosulfuron-methyl they are further discussed in the aggregate risk sections below.

Based on the FIRST and SCI-GROW models the EECs of halosulfuron-methyl for acute exposures are estimated to be 5.39 parts per billion (ppb) for surface water and 0.049 ppb for ground water. The EECs for chronic exposures based on FIRST and SCI-GROW models are estimated to be 0.245 ppb for surface water and 0.049 ppb for ground water.

3. *From non-dietary exposure.* The term ''residential exposure'' is used in this document to refer to non-occupational, non-dietary exposure (e.g., for lawn and garden pest control, indoor pest control, termiticides, and flea and tick control on pets).

Halosulfuron-methyl is currently registered for use on the following residential non-dietary sites: Residential turf. The risk assessment was conducted using the following exposure assumptions: Halosulfuron-methyl (trade name: ''Manage'') is a sulfonylurea herbicide used for control of broadleaf weeds and nutsedge. Manage may be broadcast applied at a rate of 0.031 to 0.062 lb ai/acre. For residential handlers and postapplication activities, short-term to intermediate-term exposures may occur. Chronic exposures (greater than or equal to 6 months of continuous exposure) are not expected. Adults may be dermally exposed after treatment to lawns, and children may be exposed through dermal, hand-to-mouth and incidental oral sources.

4. *Cumulative exposure to substances with a common mechanism of toxicity.* Section 408(b)(2)(D)(v) requires that, when considering whether to establish, modify, or revoke a tolerance, the Agency consider ''available information'' concerning the cumulative effects of a particular pesticide's residues and ''other substances that have a common mechanism of toxicity.''

EPA does not have, at this time, available data to determine whether halosulfuron-methyl has a common mechanism of toxicity with other substances or how to include this pesticide in a cumulative risk assessment. Unlike other pesticides for which EPA has followed a cumulative risk approach based on a common mechanism of toxicity, halosulfuron-methyl does not appear to produce a toxic metabolite produced by other substances. For the purposes of this tolerance action, therefore, EPA has not assumed that halosulfuron-methyl has a common mechanism of toxicity with other substances. For information regarding EPA's efforts to determine which chemicals have a common mechanism of toxicity and to evaluate the cumulative effects of such chemicals, see the final rule for Bifenthrin Pesticide Tolerances (62 FR 62961, November 26, 1997).

C. Safety Factor for Infants and Children

1. *In general.* FFDCA section 408 provides that EPA shall apply an additional tenfold margin of safety for infants and children in the case of threshold effects to account for prenatal and postnatal toxicity and the completeness of the data base on toxicity and exposure unless EPA determines that a different margin of safety will be safe for infants and children. Margins of safety are incorporated into EPA risk assessments either directly through use of a margin of exposure (MOE) analysis or through using uncertainty (safety) factors in

calculating a dose level that poses no appreciable risk to humans.

2. *Developmental toxicity studies*. In a prenatal developmental toxicity study in rats, the NOAEL for maternal toxicity was 250 mg/kg/day and the LOAEL was 750 mg/kg/day based on increased incidence of clinical observations (primarily alopecia and urine stains) and reduced body weight gains, food consumption, and food efficiency. For developmental toxicity, the NOAEL was 250 mg/kg/day and the LOAEL was 750 mg/kg/day based on decreased mean litter size, increased number of resorptions (total and per litter), significantly decreased mean fetal body weight, and increases in fetal and litter incidences of soft tissue (primarily dilation of the lateral ventricles and other anomalies in the development of the fetal nervous system) and skeletal variations (anomalies or delays in ossification in the thoracic vertebrae, sternebrae, and ribs). EPA noted that both the fetal and litter incidences of dilated lateral ventricles of the brain were statistically significant, and appeared to be dose related, since the finding was also observed at the mid-dose in 2 fetuses of 2 litters. Due to the lack of historical control data, it was not possible to evaluate the biological significance of the low incidence of this finding at the mid-dose level. EPA recommends that the study developmental NOAEL and LOAEL as defined by the data evaluation record not be revised at this time.

In a prenatal developmental toxicity study in the rabbit, the NOAEL for maternal toxicity was 50 mg/kg/day and the LOAEL was 150 mg/kg/day based on decreased body weight gain, food consumption, and food efficiency. For developmental toxicity, the NOAEL was 50 mg/kg/day and the LOAEL was 150 mg/kg/day based on decreased mean litter size, increased number of resorptions (total and per dam) and increased postimplantation loss. EPA notes that these developmental findings, while not statistically significant, define a consistent pattern of effect. The developmental NOAEL is 50 mg/kg/day based on decreased mean litter size, increased number of resorptions (total and per dam) and increased postimplantation loss at 150 mg/kg/day (LOAEL). EPA recommends that this dose and effect be used for assessing acute dietary risks for the sub-populations, Females 13+ as well as Infants and Children. Although the endpoint is developmental toxicity occurring *in utero*, and thus may not be suitable for use in risk assessment for Infants and Children, EPA determined that it is appropriate to use for this subpopulation (infants and children) because there is evidence of alteration to the development of the fetal nervous system in the developmental study in rats (see above). Thus, EPA determined that potential effects on functional development mandate the use of this endpoint for females of child bearing age (Females 13+) as well as for infants and children. This endpoint is not applicable for adult males. A dose and endpoint was not identified for this subpopulation since there were no toxicological effects applicable to adult males and attributable to a single exposure (dose) observed in oral toxicity studies including the developmental toxicity studies in rats and rabbits.

3. *Reproductive toxicity study*. In the 2-generation reproduction study in rats, effects in the offspring were observed only at or above treatment levels which resulted in evidence of parental toxicity.

4. *Prenatal and postnatal sensitivity*. There was no evidence of increased susceptibility of rats or rabbits to *in utero* and/or postnatal exposure to halosulfuron-methyl. In the prenatal developmental toxicity studies in rats and rabbits and the 2-generation reproduction study in rats, effects in the offspring were observed only at or above treatment levels which resulted in evidence of parental toxicity.

5. *Conclusion*. There is a complete toxicity data base for halosufuron-methyl and exposure data are complete or are estimated based on data that reasonably accounts for potential exposures. EPA determined that the 10X safety factor to protect infants and children should be removed. The FQPA factor is removed because there was no indication of increased susceptibility of rats or rabbits to *in utero* and/or postnatal exposure to halosulfuron-methyl. In the prenatal developmental toxicity studies in rats and rabbits and the 2-generation reproduction study in rats, effects in the offspring were observed only at or above treatment levels which resulted in evidence of parental toxicity. EPA determined that the requirement of a developmental neurotoxicity study in rats did not warrant an application of additional safety factors because: (a) The alterations in the fetal nervous system occurred in only one species (in rats and not in rabbits); (b) the fetal effects which will be investigated in the required developmental neurotoxicity study were seen only at a dose of 750 mg/kg/day which is close to the Limit-Dose (1,000 mg/kg/day); (c) there was no evidence of clinical signs of neurotoxicity, brain weight changes, or neuropathology in the subchronic or chronic studies in rats; (d) the developmental neurotoxicity study is required only as confirmatory data to understand what the effect is at a high exposure (dose) level.

D. Aggregate Risks and Determination of Safety

To estimate total aggregate exposure to a pesticide from food, drinking water, and residential uses, the Agency calculates DWLOCs which are used as a point of comparison against the model estimates of a pesticide's concentration in water (EECs). DWLOC values are not regulatory standards for drinking water. DWLOCs are theoretical upper limits on a pesticide's concentration in drinking water in light of total aggregate exposure to a pesticide in food and residential uses. In calculating a DWLOC, the Agency determines how much of the acceptable exposure (i.e., the PAD) is available for exposure through drinking water e.g., allowable chronic water exposure (mg/kg/day) = cPAD - (average food + chronic non-dietary, non-occupational exposure). This allowable exposure through drinking water is used to calculate a DWLOC.

A DWLOC will vary depending on the toxic endpoint, drinking water consumption, and body weights. Default body weights and consumption values as used by the USEPA Office of Water are used to calculate DWLOCs: 2L/70 kg (adult male), 2L/60 kg (adult female), and 1L/10 kg (child). Default body weights and drinking water consumption values vary on an individual basis. This variation will be taken into account in more refined screening-level and quantitative drinking water exposure assessments. Different populations will have different DWLOCs. Generally, a DWLOC is calculated for each type of risk assessment used: acute, short-term, intermediate-term, chronic, and cancer.

When EECs for surface water and groundwater are less than the calculated DWLOCs, EPA concludes with reasonable certainty that exposures to halosulfuron-methyl in drinking water (when considered along with other sources of exposure for which EPA has reliable data) would not result in unacceptable levels of aggregate human health risk at this time. Because EPA considers the aggregate risk resulting from multiple exposure pathways associated with a pesticide's uses, levels of comparison in drinking water may vary as those uses change. If new uses are added in the future, EPA will reassess the potential impacts of halosulfuron-methyl on drinking water as a part of the aggregate risk assessment process.

1. *Acute risk*. Using the exposure assumptions discussed in this unit for acute exposure, the acute dietary exposure from food to halosulfuron-methyl will occupy < 1.0% of the aPAD for females 13 years and older, 1.0% of the aPAD for All Infants, < 1 year old and < 1.0% of the aPAD for Children, 1–6 years old. In addition, despite the potential for acute dietary exposure to halosulfuron-methyl in drinking water, after calculating DWLOCs and comparing them to conservative model EECs of halosulfuron-methyl in surface and ground water, EPA does not expect the aggregate exposure to exceed 100% of the aPAD, as shown in the following Table 2:

TABLE 2.—AGGREGATE RISK ASSESSMENT FOR ACUTE EXPOSURE TO HALOSULFURON-METHYL

Population Subgroup	aPAD (mg/kg)	% aPAD (Food)	Surface Water EEC (ppb)	Ground Water EEC (ppb)	Acute DWLOC (ppb)
All infants	0.50	1.0	5.39	0.049	5,000
Females, 13–50 years	0.50	<1.0	5.39	0.049	15,000
Children, 1–6 years	0.50	<1.0	5.39	0.049	5,000

2. *Chronic risk*. Using the exposure assumptions described in this unit for chronic exposure, EPA has concluded that exposure to halosulfuron-methyl from food will utilize < 1.0% of the cPAD for the U.S. population, < 1.0% of the cPAD for All infants, < 1 year old and < 1.0% of the cPAD for Children, 1–6 years old. Based on the use pattern, chronic residential exposure to residues of halosulfuron-methyl is not expected. In addition, despite the potential for chronic dietary exposure to halosulfuron-methyl in drinking water, after calculating DWLOCs and comparing them to conservative model estimated environmental concentrations of halosulfuron-methyl in surface and ground water, EPA does not expect the aggregate exposure to exceed 100% of the cPAD, as shown in the following Table 3:

TABLE 3. —AGGREGATE RISK ASSESSMENT FOR CHRONIC (NON- CANCER) EXPOSURE TO HALOSULFURON-METHYL

Population Subgroup	cPAD mg/kg/day	% cPAD (Food)	Surface Water EEC (ppb)	Ground Water EEC (ppb)	Chronic DWLOC (ppb)
U.S. Population	0.10	< 1.0	0.245	0.049	3,500
All Infants	0.10	< 1.0	0.245	0.049	990
Children, 1–6 years	0.10	< 1.0	0.245	0.049	1,000
Females, 13–50 years	0.10	< 1.0	0.245	0.049	3,000

3. *Short-term risk*. Short-term aggregate exposure takes into account residential exposure plus chronic exposure to food and water (considered to be a background exposure level).

Halosulfuron-methyl is currently registered for use(s) that could result in short-term residential exposure and the Agency has determined that it is appropriate to aggregate chronic food and water and short-term exposures for halosulfuron-methyl. EPA concludes with reasonable certainty that residues of halosulfuron-methyl in drinking water will not contribute significantly to the short-term aggregate human health risk and that the short-term aggregate exposure from halosulfuron-methyl residues in food and drinking water will not exceed the Agency's level of concern (MOE ≤ 100) for short-term aggregate exposure by any population subgroup.

Using the exposure assumptions described in this unit for short-term exposures, EPA has concluded that food and residential exposures aggregated result in aggregate MOEs of 2,200 for females and 2,900 for children. These aggregate MOEs do not exceed the Agency's level of concern for aggregate exposure to food and residential uses. Short-term dermal MOEs for residential handlers are all above 100 and do not exceed EPA's level of concern. Non-occupational postapplication risk was estimated for adults and children.Risk estimates for all residential exposure scenarios and time periods result in MOEs that are 100 or greater, and therefore do not exceed EPA's level of concern. In addition, short-term DWLOCs were calculated and compared to the EECs for chronic exposure of halosulfuron-methyl in ground water and surface water. After calculating DWLOCs and comparing them to the EECs for surface and ground water, EPA does not expect short-term aggregate exposure to exceed the Agency's level of concern, as shown in the following Table 4:

TABLE 4.—AGGREGATE RISK ASSESSMENT FOR SHORT-TERM EXPOSURE TO HALOSULFURON-METHYL

Population Subgroup	Aggregate MOE (Food + Residential)	Aggregate Level of Concern (LOC)	Surface Water EEC (ppb)	Ground Water EEC (ppb)	Short-Term DWLOC (ppb)
Females	2,200	100	0.245	0.049	14,000
Children	2,900	100	0.245	0.049	4,800

4. *Intermediate-term risk*. Intermediate-term aggregate exposure takes into account non-dietary, non-occupational exposure plus chronic exposure to food and water (considered to be a background exposure level).

Halosulfuron-methyl is currently registered for use(s) that could result in intermediate-term residential exposure and the Agency has determined that it is appropriate to aggregate chronic food and water and intermediate-term exposures for halosulfuron-methyl.

Using the exposure assumptions described in this unit for intermediate-term exposures, EPA has concluded that food and residential exposures aggregated result in aggregate MOEs of 1,700 for females, 2,000 for males, and 1,000 for children. These aggregate MOEs do not exceed the Agency's level of concern for aggregate exposure to food and residential uses. In addition, intermediate-term DWLOCs were calculated and compared to the EECs for chronic exposure of halosulfuron-methyl in ground water and surface water. After calculating DWLOCs and comparing them to the EECs for surface and ground water, EPA does not expect intermediate-term aggregate exposure to exceed the Agency's level of concern, as shown in the following Table 5:

TABLE 5.—AGGREGATE RISK ASSESSMENT FOR INTERMEDIATE- TERM EXPOSURE TO HALOSULFURON-METHYL

Population Subgroup	Aggregate MOE (Food + Residential)	Aggregate Level of Concern (LOC)	Surface Water EEC (ppb)	Ground Water EEC (ppb)	Intermediate-Term DWLOC (ppb)
Females	1,700	100	0.245	0.049	2,800
Males	2,000	100	0.245	0.049	3,300
Children	1,000	100	0.245	0.049	900

5. *Aggregate cancer risk for U.S. population.* Halosulfuron-methyl is classified as a ''not likely'' human carcinogen based on a lack of evidence of carcinogenicity in male and female mice and rats. A cancer risk assessment is not required.

6. *Determination of safety.* Based on these risk assessments, EPA concludes that there is a reasonable certainty that no harm will result to the general population, and to infants and children from aggregate exposure to halosulfuron-methyl residues.

V. Other Considerations

A. Analytical Enforcement Methodology

Analytical enforcement methodology for the determination of halosulfuron-methyl in various plant commodities has been sent to the Food and Drug Administration for publication in the Pesticide Analytical Methods, Volume II (PAM II). Quantitation of residues is by gas chromotography with nitrogen specific detection (GC/TSD).

B. International Residue Limits

There are no Codex, Canadian, or Mexican maximum residue limits for halosulfuron-methyl in/on asparagus. Therefore, harmonization is not an issue.

VI. Conclusion

Therefore, the tolerance is established for residues of halosulfuron-methyl, methyl 5-[(4,6-dimethoxy-2-pyrimidinyl) amino]carbonylaminosulfonyl-3-chloro-1-methyl-1H- pyrazole-4-carboxylate in or on asparagus at 2.0 ppm.

VII. Objections and Hearing Requests

Under section 408(g) of the FFDCA, as amended by the FQPA, any person may file an objection to any aspect of this regulation and may also request a hearing on those objections. The EPA procedural regulations which govern the submission of objections and requests for hearings appear in 40 CFR part 178. Although the procedures in those regulations require some modification to reflect the amendments made to the FFDCA by the FQPA of 1996, EPA will continue to use those procedures, with appropriate adjustments, until the necessary modifications can be made. The new section 408(g) provides essentially the same process for persons to ''object'' to a regulation for an exemption from the requirement of a tolerance issued by EPA under new section 408(d), as was provided in the old FFDCA sections 408 and 409. However, the period for filing objections is now 60 days, rather than 30 days.

A. What Do I Need to Do to File an Objection or Request a Hearing?

You must file your objection or request a hearing on this regulation in accordance with the instructions provided in this unit and in 40 CFR part 178. To ensure proper receipt by EPA, you must identify docket control number OPP–301197 in the subject line on the first page of your submission. All requests must be in writing, and must be mailed or delivered to the Hearing Clerk on or before February 25, 2002.

1. *Filing the request.* Your objection must specify the specific provisions in the regulation that you object to, and the grounds for the objections (40 CFR 178.25). If a hearing is requested, the objections must include a statement of the factual issues(s) on which a hearing is requested, the requestor's contentions on such issues, and a summary of any evidence relied upon by the objector (40 CFR 178.27). Information submitted in connection with an objection or hearing request may be claimed confidential by marking any part or all of that information as CBI. Information so marked will not be disclosed except in accordance with procedures set forth in 40 CFR part 2. A copy of the information that does not contain CBI must be submitted for inclusion in the public record. Information not marked confidential may be disclosed publicly by EPA without prior notice.

Mail your written request to: Office of the Hearing Clerk (1900), Environmental Protection Agency, 1200 Pennsylvania Ave., NW., Washington, DC 20460. You may also deliver your request to the Office of the Hearing Clerk in Rm. C400, Waterside Mall, 401 M St., SW., Washington, DC 20460. The Office of the Hearing Clerk is open from 8 a.m. to 4 p.m., Monday through Friday, excluding legal holidays. The telephone number for the Office of the Hearing Clerk is (202) 260–4865.

2. *Tolerance fee payment.* If you file an objection or request a hearing, you must also pay the fee prescribed by 40 CFR 180.33(i) or request a waiver of that fee pursuant to 40 CFR 180.33(m). You must mail the fee to: EPA Headquarters Accounting Operations Branch, Office of Pesticide Programs, P.O. Box 360277M, Pittsburgh, PA 15251. Please identify the fee submission by labeling it ''Tolerance Petition Fees.''

EPA is authorized to waive any fee requirement ''when in the judgement of the Administrator such a waiver or refund is equitable and not contrary to the purpose of this subsection.'' For additional information regarding the waiver of these fees, you may contact James Tompkins by phone at (703) 305–5697, by e-mail at tompkins.jim@epa.gov, or by mailing a request for information to Mr. Tompkins at Registration Division (7505C), Office

of Pesticide Programs, Environmental Protection Agency, 1200 Pennsylvania Ave., NW., Washington, DC 20460.

If you would like to request a waiver of the tolerance objection fees, you must mail your request for such a waiver to: James Hollins, Information Resources and Services Division (7502C), Office of Pesticide Programs, Environmental Protection Agency, 1200 Pennsylvania Ave., NW., Washington, DC 20460.

3. *Copies for the Docket*. In addition to filing an objection or hearing request with the Hearing Clerk as described in Unit VII.A., you should also send a copy of your request to the PIRIB for its inclusion in the official record that is described in Unit I.B.2. Mail your copies, identified by the docket control number OPP–301197, to: Public Information and Records Integrity Branch, Information Resources and Services Division (7502C), Office of Pesticide Programs, Environmental Protection Agency, 1200 Pennsylvania Ave., NW., Washington, DC 20460. In person or by courier, bring a copy to the location of the PIRIB described in Unit I.B.2. You may also send an electronic copy of your request via e-mail to: opp-docket@epa.gov. Please use an ASCII file format and avoid the use of special characters and any form of encryption. Copies of electronic objections and hearing requests will also be accepted on disks in WordPerfect 6.1/8.0 or ASCII file format. Do not include any CBI in your electronic copy. You may also submit an electronic copy of your request at many Federal Depository Libraries.

B. When Will the Agency Grant a Request for a Hearing?

A request for a hearing will be granted if the Administrator determines that the material submitted shows the following: There is a genuine and substantial issue of fact; there is a reasonable possibility that available evidence identified by the requestor would, if established resolve one or more of such issues in favor of the requestor, taking into account uncontested claims or facts to the contrary; and resolution of the factual issues(s) in the manner sought by the requestor would be adequate to justify the action requested (40 CFR 178.32).

VIII. Regulatory Assessment Requirements

This final rule establishes a time limited tolerance under FFDCA section 408. The Office of Management and Budget (OMB) has exempted these types of actions from review under Executive Order 12866, entitled *Regulatory Planning and Review* (58 FR 51735, October 4, 1993). Because this rule has been exempted from review under Executive Order 12866 due to its lack of significance, this rule is not subject to Executive Order 13211, *Actions Concerning Regulations That Significantly Affect Energy Supply, Distribution, or Use* (66 FR 28355, May 22, 2001). This final rule does not contain any information collections subject to OMB approval under the Paperwork Reduction Act (PRA), 44 U.S.C. 3501 *et seq.*, or impose any enforceable duty or contain any unfunded mandate as described under Title II of the Unfunded Mandates Reform Act of 1995 (UMRA) (Public Law 104–4). Nor does it require any special considerations under Executive Order 12898, entitled *Federal Actions to Address Environmental Justice in Minority Populations and Low-Income Populations* (59 FR 7629, February 16, 1994); or OMB review or any Agency action under Executive Order 13045, entitled *Protection of Children from Environmental Health Risks and Safety Risks* (62 FR 19885, April 23, 1997). This action does not involve any technical standards that would require Agency consideration of voluntary consensus standards pursuant to section 12(d) of the National Technology Transfer and Advancement Act of 1995 (NTTAA), Public Law 104–113, section 12(d) (15 U.S.C. 272 note). Since tolerances and exemptions that are established on the basis of a FIFRA section 18 exemption under FFDCA section 408, such as the tolerance in this final rule, do not require the issuance of a proposed rule, the requirements of the Regulatory Flexibility Act (RFA) (5 U.S.C. 601 *et seq.*) do not apply. In addition, the Agency has determined that this action will not have a substantial direct effect on States, on the relationship between the national government and the States, or on the distribution of power and responsibilities among the various levels of government, as specified in Executive Order 13132, entitled *Federalism* (64 FR 43255, August 10, 1999). Executive Order 13132 requires EPA to develop an accountable process to ensure ''meaningful and timely input by State and local officials in the development of regulatory policies that have federalism implications.'' ''Policies that have federalism implications'' is defined in the Executive Order to include regulations that have ''substantial direct effects on the States, on the relationship between the national government and the States, or on the distribution of power and responsibilities among the various levels of government.'' This final rule directly regulates growers, food processors, food handlers and food retailers, not States. This action does not alter the relationships or distribution of power and responsibilities established by Congress in the preemption provisions of FFDCA section 408(n)(4). For these same reasons, the Agency has determined that this rule does not have any ''tribal implications'' as described in Executive Order 13175, entitled *Consultation and Coordination with Indian Tribal Governments* (65 FR 67249, November 6, 2000). Executive Order 13175, requires EPA to develop an accountable process to ensure ''meaningful and timely input by tribal officials in the development of regulatory policies that have tribal implications.'' ''Policies that have tribal implications'' is defined in the Executive Order to include regulations that have ''substantial direct effects on one or more Indian tribes, on the relationship between the Federal government and the Indian tribes, or on the distribution of power and responsibilities between the Federal government and Indian tribes.'' This rule will not have substantial direct effects on tribal governments, on the relationship between the Federal government and Indian tribes, or on the distribution of power and responsibilities between the Federal government and Indian tribes, as specified in Executive Order 13175. Thus, Executive Order 13175 does not apply to this rule.

IX. Submission to Congress and the Comptroller General

The Congressional Review Act, 5 U.S.C. 801 *et seq.*, as added by the Small Business Regulatory Enforcement Fairness Act of 1996, generally provides that before a rule may take effect, the agency promulgating the rule must submit a rule report, which includes a copy of the rule, to each House of the Congress and to the Comptroller General of the United States. EPA will submit a report containing this rule and other required information to the U.S. Senate, the U.S. House of Representatives, and the Comptroller General of the United States prior to publication of this final rule in the **Federal Register**. This final rule is not a ''major rule'' as defined by 5 U.S.C. 804(2).

List of Subjects in 40 CFR Part 180

Environmental protection, Administrative practice and procedure, Agricultural commodities, Pesticides and pests, Reporting and recordkeeping requirements.

Dated: December 14, 2001.

Peter Caulkins,

Acting Director, Registration Division, Office of Pesticide Programs.

Therefore, 40 CFR chapter I is amended as follows:

PART 180—[AMENDED]

1. The authority citation for part 180 continues to read as follows:

Authority: 21 U.S.C. 321(q), 346(a) and 371.

2. Section 180.479 is amended by adding text to paragraph (b) to read as follows:

§ 180.479 Halosulfuron; tolerances for residues.

* * * * *

(b) *Section 18 emergency exemptions.* A time-limited tolerance is established for halosulfuron-methyl, methyl 5-[(4,6-dimethoxy-2-pyrimidinyl)amino] carbonylaminosulfonyl-3-chloro-1-methyl-1H-pyrazole-4-carboxylate, in or on asparagus in connection with use of the pesticide under a section 18 exemption granted by EPA. The time-limited tolerance will expire on the date specified in the following table.

Commodity	Parts per million	Expiration/revocation date
Asparagus	2.0	12/31/03

* * * * *

[FR Doc. 01–31800 Filed 12–26–01; 8:45 am]

BILLING CODE 6560–50–S

ENVIRONMENTAL PROTECTION AGENCY

40 CFR Part 180

[OPP–301180; FRL–6804–1]

RIN 2070–AB78

Pymetrozine; Pesticide Tolerance

AGENCY: Environmental Protection Agency (EPA).

ACTION: Final rule.

SUMMARY: This regulation establishes tolerances for residues of pymetrozine 1,2,4-triazin-3(2H)-one,4,5-dihydro-6-methyl-4-[(3-pyridinylmethylene) amino] in or on cotton seed, undelinted at 0.3 parts per million (ppm); cotton gin byproducts at 2.0 ppm; fruiting vegetables at 0.2 ppm; cucurbit vegetables at 0.1 ppm; leafy vegetables (except *Brassica*) at 0.6 ppm; head and stem *Brassica* vegetables at 0.5 ppm; leafy *Brassica* and turnip greens at 0.25 ppm; hops (dried) at 6.0 ppm; and pecans at 0.02 ppm. Syngenta Crop Protection requested these tolerances under the Federal Food, Drug, and Cosmetic Act, as amended by the Food Quality Protection Act of 1996.

DATES: This regulation is effective December 27, 2001. Objections and requests for hearings, identified by docket control number OPP–301180, must be received by EPA on or before February 25, 2002.

ADDRESSES: Written objections and hearing requests may be submitted by mail, in person, or by courier. Please follow the detailed instructions for each method as provided in Unit VI. of the **SUPPLEMENTARY INFORMATION.** To ensure proper receipt by EPA, your objections and hearing requests must identify docket control number OPP–301180 in the subject line on the first page of your response.

FOR FURTHER INFORMATION CONTACT: By mail: Daniel Peacock, Registration Division (7505C), Office of Pesticide Programs, Environmental Protection Agency, 1200 Pennsylvania Ave., NW., Washington, DC 20460; telephone number: (703) 305–5407; and e-mail address: peacock.dan@epa.gov.

SUPPLEMENTARY INFORMATION:

I. General Information

A. Does this Action Apply to Me?

You may be affected by this action if you are an agricultural producer, food manufacturer, or pesticide manufacturer. Potentially affected categories and entities may include, but are not limited to:

Categories	NAICS	Examples of Potentially Affected Entities
Industry	111	Crop production
	112	Animal production
	311	Food manufacturing
	32532	Pesticide manufacturing

This listing is not intended to be exhaustive, but rather provides a guide for readers regarding entities likely to be affected by this action. Other types of entities not listed in the table could also be affected. The North American Industrial Classification System (NAICS) codes have been provided to assist you and others in determining whether or not this action might apply to certain entities. If you have questions regarding the applicability of this action to a particular entity, consult the person listed under **FOR FURTHER INFORMATION CONTACT**.

B. How Can I Get Additional Information, Including Copies of this Document and Other Related Documents?

1. *Electronically.* You may obtain electronic copies of this document, and certain other related documents that might be available electronically, from the EPA Internet Home Page at http://www.epa.gov/. To access this document, on the Home Page select ''Laws and Regulations'', ''Regulations and Proposed Rules,'' and then look up the entry for this document under the ''**Federal Register**—Environmental Documents.'' You can also go directly to the**Federal Register** listings at http://www.epa.gov/fedrgstr/. A frequently updated electronic version of 40 CFR part 180 is available at http://www.access.gpo.gov/nara/cfr/cfrhtml_180/Title_40/40cfr180_00.html, a beta site currently under development.

2. *In person.* The Agency has established an official record for this action under docket control number OPP–301180. The official record consists of the documents specifically referenced in this action, and other information related to this action, including any information claimed as Confidential Business Information (CBI). This official record includes the documents that are physically located in the docket, as well as the documents that are referenced in those documents. The public version of the official record does not include any information claimed as CBI. The public version of the official record, which includes printed, paper versions of any electronic comments submitted during an applicable comment period is available for inspection in the Public Information and Records Integrity Branch (PIRIB), Rm. 119, Crystal Mall #2, 1921 Jefferson Davis Hwy., Arlington, VA, from 8:30 a.m. to 4 p.m., Monday through Friday, excluding legal holidays. The PIRIB telephone number is (703) 305–5805.

II. Background and Statutory Findings

In the **Federal Register** of July 19, 2001 (66 FR 37677–37681 (FRL–6793–9), EPA issued a notice pursuant to section 408 of the Federal Food, Drug, and Cosmetic Act (FFDCA), 21 U.S.C.

346a as amended by the Food Quality Protection Act of 1996 (FQPA) (Public Law 104–170) announcing the filing of a pesticide petition (PP) for tolerance by, Syngenta Crop Protection of Greensboro, North Carolina 27419. This notice included a summary of the petition prepared by Syngenta, the registrant. There were no comments received in response to the notice of filing.

The petition requested that 40 CFR 180.556 be amended by establishing a tolerance for residues of the insecticide pymetrozine 1,2,4-triazin-3(2H)-one,4,5-dihydro-6- methyl-4-[(3-pyridinylmethylene) amino] in or on cotton seed, undelinted at 0.4 ppm; cotton gin byproducts at 3.0 ppm; fruiting vegetables at 0.2 ppm; cucurbit vegetables at 0.1 ppm; leafy vegetables (except *Brassica*) at 6.0 ppm; head and stem *Brassica* vegetables at 2.0 ppm; leafy *Brassica* greens at 5.0 ppm; hops (dried) at 5.0 ppm; and pecans at 0.02 ppm.

Section 408(b)(2)(A)(i) of the FFDCA allows EPA to establish a tolerance (the legal limit for a pesticide chemical residue in or on a food) only if EPA determines that the tolerance is ''safe.'' Section 408(b)(2)(A)(ii) defines ''safe'' to mean that ''there is a reasonable certainty that no harm will result from aggregate exposure to the pesticide chemical residue, including all anticipated dietary exposures and all other exposures for which there is reliable information.'' This includes exposure through drinking water and in residential settings, but does not include occupational exposure. Section 408(b)(2)(C) requires EPA to give special consideration to exposure of infants and children to the pesticide chemical residue in establishing a tolerance and to ''ensure that there is a reasonable certainty that no harm will result to infants and children from aggregate exposure to the pesticide chemical residue....''

EPA performs a number of analyses to determine the risks from aggregate exposure to pesticide residues. For further discussion of the regulatory requirements of section 408 and a complete description of the risk assessment process, see the final rule on Bifenthrin Pesticide Tolerances (62 FR 62961, November 26, 1997) (FRL–5754–7).

III. Aggregate Risk Assessment and Determination of Safety

Consistent with section 408(b)(2)(D), EPA has reviewed the available scientific data and other relevant information in support of this action. EPA has sufficient data to assess the hazards of and to make a determination on aggregate exposure, consistent with section 408(b)(2), for a tolerance for residues of pymetrozine in or on cotton seed, undelinted at 0.3 ppm; cotton gin byproducts at 2.0 ppm; fruiting vegetables at 0.2 ppm; cucurbit vegetables at 0.1 ppm; leafy vegetables (except *Brassica*) at 0.6 ppm; head and stem *Brassica* vegetables at 0.5 ppm; leafy *Brassica* and turnip greens at 0.25 ppm; hops (dried) at 6.0 ppm; and pecans at 0.02 ppm. EPA's assessment of exposures and risks associated with establishing the tolerance follows.

A. Toxicological Profile

EPA has evaluated the available toxicity data and considered its validity, completeness, and reliability as well as the relationship of the results of the studies to human risk. EPA has also considered available information concerning the variability of the sensitivities of major identifiable subgroups of consumers, including infants and children. The nature of the toxic effects caused by pymetrozine are discussed in this unit and in a previous **Federal Register** notice.

1. *Acute toxicity*. In general, technical pymetrozine has low acute toxicity, being classified as Toxicity Category III for acute dermal and primary eye irritation studies and Toxicity Category IV for acute oral, acute inhalation and primary dermal studies. It is a slight sensitizer.

2. *Subchronic and chronic toxicity*. EPA's September 29, 1999, **Federal Register** notice (64 FR 52438–52450) (FRL–6385–6) summarized the results of the subchronic and chronic toxicity, metabolism, and dermal penetration studies in animals.

B. Toxicological Endpoints

The dose at which no adverse effects are observed (the NOAEL) from the toxicology study identified as appropriate for use in risk assessment is used to estimate the toxicological level of concern (LOC). However, the lowest dose at which adverse effects of concern are identified (the LOAEL) is sometimes used for risk assessment if no NOAEL was achieved in the toxicology study selected. An uncertainty factor (UF) is applied to reflect uncertainties inherent in the extrapolation from laboratory animal data to humans and in the variations in sensitivity among members of the human population as well as other unknowns. An UF of 100 is routinely used, 10X to account for interspecies differences and 10X for intra species differences.

For dietary risk assessment (other than cancer) the Agency uses the UF to calculate an acute or chronic reference dose (acute RfD or chronic RfD) where the RfD is equal to the NOAEL divided by the appropriate UF (RfD = NOAEL/UF). Where an additional safety factor is retained due to concerns unique to the FQPA, this additional factor is applied to the RfD by dividing the RfD by such additional factor. The acute or chronic Population Adjusted Dose (aPAD or cPAD) is a modification of the RfD to accommodate this type of FQPA Safety Factor.

For non-dietary risk assessments (other than cancer) the UF is used to determine the LOC. For example, when 100 is the appropriate UF (10X to account for interspecies differences and 10X for intraspecies differences) the LOC is 100. To estimate risk, a ratio of the NOAEL to exposures (margin of exposure (MOE) = NOAEL/exposure) is calculated and compared to the LOC.

The linear default risk methodology (Q*) is the primary method currently used by the Agency to quantify carcinogenic risk. The Q* approach assumes that any amount of exposure will lead to some degree of cancer risk. A Q* is calculated and used to estimate risk which represents a probability of occurrence of additional cancer cases (e.g., risk is expressed as 1×10^{-6} or one in a million). Under certain specific circumstances, MOE calculations will be used for the carcinogenic risk assessment. In this non-linear approach, a ''point of departure'' is identified below which carcinogenic effects are not expected. The point of departure is typically a NOAEL based on an endpoint related to cancer effects though it may be a different value derived from the dose response curve. To estimate risk, a ratio of the point of departure to exposure (MOE_{cancer} = point of departure/exposures) is calculated. A summary of the toxicological endpoints for pymetrozine used for human risk assessment was discussed in a previous **Federal Register** notice of September 29, 1999 (64 FR 52438–52450) (FRL–6385–6).

C. Exposure Assessment

1. *Dietary exposure from food and feed uses*. Prior to this Rule, the Agency had established tolerances for pymetrozine in or on corm and tuberous vegetables (Crop Subgroup 1-C) at 0.02 ppm, cucurbit vegetables (Crop Group 8) at 0.05 ppm, and fruiting vegetables (Crop Group 9) at 0.05 ppm (40 CFR 180.556). This Rule establishes new tolerances for residues of pymetrozine in or on a variety of raw agricultural commodities: cotton seed, undelinted at 0.3 ppm; cotton gin byproducts at 2.0 ppm; fruiting vegetables at 0.2 ppm;

cucurbit vegetables at 0.1 ppm; leafy vegetables (except *Brassica*) at 0.6 ppm; head and stem *Brassica* vegetables at 0.5 ppm; leafy *Brassica* and turnip greens at 0.25 ppm; hops (dried) at 6.0 ppm; and pecans at 0.02 ppm. Risk assessments were conducted by EPA to assess dietary exposures from pymetrozine in food as follows:

i. *Acute exposure*. Acute dietary risk assessments are performed for a food-use pesticide if a toxicological study has indicated the possibility of an effect of concern occurring as a result of a one day or single exposure. The Dietary Exposure Evaluation Model (DEEM® analysis evaluated the individual food consumption as reported by respondents in the USDA 1989–1992 nationwide Continuing Surveys of Food Intake by Individuals (CSFII) and accumulated exposure to the chemical for each commodity. The following assumptions were made for the acute exposure assessments. 100% of the crop were treated, and the residue levels were assumed to be at the tolerance level.

Using these conservative assumptions, the acute dietary (food only) exposure to pymetrozine from all existing and proposed uses (tuberous and corm, fruiting, and cucurbit vegetables; cotton seed (undelinted); cotton gin byproducts; hops, dried; leafy vegetables (except *Brassica*); head and stem *Brassica* vegetables; leafy *Brassica* greens; turnip greens; and pecans will be below EPA's level of concern (100% of the acute Population-Adjusted Dose (aPAD)) and will not occupy more than 5.9% of the aPAD for any population subgroup, including those of infants and children. For the maximum-exposed subgroup, the 95th percentile of exposure (Females 13–50 years old) is predicted to be 5.9% of the aPAD. Due to pymetrozine's lower acute endpoint for females 13–50 years old (0.033 mg/kg) versus that of other population subgroups (0.14 mg/kg for infants and children), the percentage of the aPAD occupied for females 13–50 years old (5.9%) is higher than that estimated for children 1–6 years old. For an exposure analysis based on the assumptions that 100% of the crop is treated and residues are at the tolerance level, EPA considers exposure at the 95th percentile of exposure to be a reasonable estimate of high end of exposure. Even at the 99th percentile of exposure, the acute risk is well below EPA's level of concern.

ii. *Chronic exposure*. In conducting this chronic dietary risk assessment the Dietary Exposure Evaluation Model (DEEM®) analysis evaluated the individual food consumption as reported by respondents in the USDA 1989–1992 nationwide Continuing Surveys of Food Intake by Individuals (CSFII) and accumulated exposure to the chemical for each commodity. The following assumptions were made for the chronic exposure assessments. The chronic analysis was a Tier 3 analysis. See Table 1 below. It was necessary to use both projected percent of crop treated (%CT) estimates and anticipated residues in the chronic analysis because when %CT alone was used, one population subgroup exceeded the Agency's level of concern.

The Tier 3 DEEM® chronic analysis indicates that exposure to pymetrozine from tuberous and corm, fruiting, and cucurbit vegetables; cotton seed (undelinted); cotton gin byproducts; hops, dried; leafy vegetables (except *Brassica*); head and stem *Brassica* vegetables; leafy *Brassica* greens; turnip greens; and pecans will occupy less than 3.4% of the cPAD for children ages 1–6 (the most highly exposed population subgroup). Chronic dietary risk to all other subgroups is less than that of children ages 1–6.

TABLE 1.—RESULTS OF CHRONIC DIETARY EXPOSURE ANALYSIS

Subgroup	cPAD (mg/kg/day)	Exposure (mg/kg/day)	% cPAD
U.S. Population (total)	0.0038	0.000034	<1
All Infants (1 year old)	0.0013	0.000018	1.4
Children 1–6 years old	0.0013	0.000045	3.4
Children 7–12 years old	0.0013	0.000040	3.1
Females 13–50	0.0013	0.000029	2.2
Males 13–19	0.0038	0.000024	<1
Males 20+ years old	0.0038	0.000034	<1
Seniors 55+	0.0038	0.000036	<1

iii. *Cancer*. The Agency's level of concern for cancer exposure is 1×10^{-6}. The lifetime risk of developing cancer from pymetrozine exposure is determined for the U.S. population (total) only. The estimated exposure to pymetrozine is 0.000034 mg/kg/day. Applying the $Q1_1$* of 0.0119 $(mg/kg/day)^{-1}$ to the exposure value results in a cancer risk estimate of 4.0×10^{-7}. Therefore, the lifetime risk to the U.S. population of developing cancer from dietary exposure to pymetrozine is below EPA's level of concern.

iv. *Anticipated Residue and Percent Crop Treated Information*. Section 408(b)(2)(E) authorizes EPA to use available data and information on the anticipated residue levels of pesticide residues in food and the actual levels of pesticide chemicals that have been measured in food. If EPA relies on such information, EPA must require that data be provided 5 years after the tolerance is established, modified, or left in effect, demonstrating that the levels in food are not above the levels anticipated. Following the initial data submission, EPA is authorized to require similar data on a time frame it deems appropriate. As required by section 408(b)(2)(E), EPA will issue a data call-in for information relating to anticipated residues to be submitted no later than 5 years from the date of issuance of this tolerance.

Section 408(b)(2)(F) states that the Agency may use data on the actual percent of food treated for assessing chronic dietary risk only if the Agency can make the following findings: Condition 1, that the data used are reliable and provide a valid basis to show what percentage of the food

derived from such crop is likely to contain such pesticide residue; Condition 2, that the exposure estimate does not underestimate exposure for any significant subpopulation group; and Condition 3, if data are available on pesticide use and food consumption in a particular area, the exposure estimate does not understate exposure for the population in such area. In addition, the Agency must provide for periodic evaluation of any estimates used. To provide for the periodic evaluation of the estimate of percent crop treated (PCT) as required by section 408(b)(2)(F), EPA may require registrants to submit data on PCT.

The registrant provided projected percent crop treated data for pymetrozine, and the Agency revised them, as shown in the following Table 2.

TABLE 2.—PROJECTED PERCENT CROP TREATED ESTIMATES

Crop	%CT
Broccoli	25
Cabbage	12.2
Cantaloupes	25
Celery	25
Cotton	6
Cucumbers	10
Head Lettuce	25
Leaf Lettuce	25
Peppers	8
Potatoes	20
Pumpkins	10
Spinach	16.4
Squash (winter and summer)	8
Tomatoes	12
Watermelons	20

The Agency believes that the three conditions listed above have been met. With respect to Condition 1, for new and existing uses, the Agency received estimates from Syngenta based upon its analysis of the marketing data that compared all of the potential major pesticides for cost, efficacy, and demand. EPA received these figures and performed its own independent analysis. The Agency examined the registrant's data and assumptions for all these factors. Based on the information that the registrant has provided, together with in-house data and information from outside contacts if necessary, the Agency agreed with the company's estimate of projected PCT for many crops. For some crops, the Agency revised the company's estimates upward.

For existing uses, PCT estimates are derived from Federal and private market survey data, which are reliable and have a valid basis. EPA uses a weighted average PCT for chronic dietary exposure estimates. This weighted average PCT figure is derived by averaging State-level data for a period of up to 10 years, and weighting for the more robust and recent data. A weighted average of the PCT reasonably represents a person's dietary exposure over a lifetime, and is unlikely to underestimate exposure to an individual because of the fact that pesticide use patterns (both regionally and nationally) tend to change continuously over time, such that an individual is unlikely to be exposed to more than the average PCT over a lifetime. For acute dietary exposure estimates, EPA uses an estimated maximum PCT. The exposure estimates resulting from this approach reasonably represent the highest levels to which an individual could be exposed, and are unlikely to underestimate an individual's acute dietary exposure. The Agency is reasonably certain that the values for the percentage of the food treated, as shown in Table 2 of this preamble, are reasonable and are not likely to be an underestimation.

As to Conditions 2 and 3, regional consumption information and consumption information for significant subpopulations is taken into account through EPA's computer-based model for evaluating the exposure of significant subpopulations including several regional groups. Use of this consumption information in EPA's risk assessment process ensures that EPA's exposure estimate does not understate exposure for any significant subpopulation group and allows the Agency to be reasonably certain that no regional population is exposed to residue levels higher than those estimated by the Agency. Other than the data available through national food consumption surveys, EPA does not have available information on the regional consumption of food to which pymetrozine may be applied in a particular area.

2. *Dietary exposure from drinking water.* The Agency lacks sufficient monitoring exposure data to complete a comprehensive dietary exposure analysis and risk assessment for pymetrozine in drinking water. Because the Agency does not have comprehensive monitoring data, drinking water concentration estimates are made by reliance on simulation or modeling taking into account data on the physical characteristics of pymetrozine.

The Agency uses FIRST (FQPA Index Reservoir Screening Tool) or PRZM/EXAMS (Pesticide Root Zone/Exposure Analysis Modeling System) program to predict pesticide concentrations in surface water; and SCI-GROW (Screening Concentration In GROund Water version 1.0) program to predict pesticide concentrations in groundwater.

The 'FIRST' program is a tier I screening model recently developed by EPA. It is used as a coarse screen for estimation of pesticide concentrations based on index agricultural watershed-drinking water reservoir or index reservoir (IR) scenario and percent cropped area (CPA). The FIRST model produces both a peak value (acute) and an annual average (chronic) pesticide concentration, or Estimated Environmental Concentrations (EECs). If the FIRST EECs are within 10% of a DWLOC, EFED will move to the next tier and perform a PRZM/EXAMS assessment.

The PRZM/EXAMS is a tier II model that provides an upper-bound estimate of a pesticide's concentration in a 1 hectare pond resulting from surface water runoff from a 10 hectare field, and is used to refine EECs generate by the lower tier FIRST model. As with FIRST, PRZM/EXAMS incorporates an index reservoir environment and includes a percent crop area factor as an adjustment to account for the maximum percent crop coverage within a watershed or drainage basin. However, this tier II model also uses NOAA climatological (rainfall) data for a 36–year period that allows for more realistic runoff events. PRZM/EXAMS produces maximum and annual concentrations for each of the 36 years for which there is rainfall data.

The Agency modeled six different scenarios, using the maximum application rate allowed for each crop: cotton, cucurbits, tomatoes, cabbage, pecans; and hops. The surface water concentrations for these crops were estimated using the Pesticide Root Zone Model (PRZM version 3.12) (Carsel et al., 1998) coupled with the Exposure Analysis Modeling System (EXAMS version 2.97.5) (Burns, 1997) adjusted with the appropriate (or default) percent cropped area (PCA) factor. The PCA factor reflects the maximum percentage of a basin planted in the agricultural crop being considered in the risk

assessment. EPA adapted a PCA factor of 0.20 for cotton. However, PCA factors are not available for cucurbits, tomatoes, cabbage, pecans, or hops, and a default value of 0.87 was used. This may result in an overestimation of the surface water concentrations for these crops compared to the cotton crop. The pecan scenario gives the highest estimated surface water concentrations, mainly due to a high level of rainfall in the areas where pecans are grown (sometimes as high as three times the level of other crops considered in this assessment) especially during the summer season. The peak (acute) EEC is 5.23 ppb and the average annual (chronic) EEC is 1.58 ppb.

PRZM is used to simulate pesticide transport as a result of runoff and erosion from an agricultural field. EXAMS estimates environmental fate and transport of pesticides in a receiving water body. For human health risk assessment, simulations were done using the Index Reservoir scenario with the consideration of a PCA factor. Weather and agricultural practices are simulated over 36 years so that the 10–year exceedance probability at the site can be estimated.

The SCI-GROW screening model was also developed by EPA, and is a regression model based upon actual groundwater monitoring data collected for the registration of a number of pesticides. The current version of SCI-GROW appears to provide a realistic estimate of pesticide concentrations in shallow, highly vulnerable ground water sites (i.e., sites with sandy soils and depth to ground water of 10 to 20 feet) for use in both chronic and acute ground water estimates.

None of these models include consideration of the impact processing (mixing, dilution, or treatment) of raw water for distribution as drinking water would likely have on the removal of pesticides from the source water. The primary use of these models by the Agency at this stage is to provide a coarse screen for sorting out pesticides for which it is highly unlikely that drinking water concentrations would ever exceed human health levels of concern.

Since the models used are considered to be screening tools in the risk assessment process, the Agency does not use estimated environmental concentrations (EECs) from these models to quantify drinking water exposure and risk as a %RfD or %PAD. Instead, drinking water levels of comparison (DWLOCs) are calculated and used as a point of comparison against the model estimates of a pesticide's concentration in water. DWLOCs are theoretical upper limits on a pesticide's concentration in drinking water in light of total aggregate exposure to a pesticide in food, and from residential uses. Since DWLOCs address total aggregate exposure to pymetrozine they are further discussed in the aggregate risk sections below.

Based on the FIRST, SCI-GROW, and PRZM/EXAMS models the EECs of pymetrozine for acute exposures are estimated to be 5.23 parts per billion (ppb) for surface water and < 0.02 ppb for ground water. The EECs for chronic exposures are estimated to be 1.58 ppb for surface water and < 0.02 ppb for ground water. See Tables 3 and 4 below.

TABLE 3.—ACUTE DRINKING WATER LEVELS OF COMPARISON FOR AGGREGATED EXPOSURES

Scenario/Population Subgroup	aPAD mg/kg/day	Food Exposure, mg/kg/day	Maximum Water Exposure, mg/kg/day	SCI-GROW (ground-water) ppb	PRZM/EXAMS (surface water) ppb	DWLOC* µg/L
U.S. Population	0.42	0.002119	0.41788	0.02	5.23	15,000
All Infants (<1 year old)	0.14	0.001404	0.13860	0.02	5.23	1,400
Children (1–6 yrs)	0.14	0.003517	0.13648	0.02	5.23	1,400
Children 7–12 years old	0.14	0.002615	0.13739	0.02	5.23	1,400
Females 13–50	0.033	0.001939	0.031061	0.02	5.23	930
Males 13–19	0.42	0.001722	0.41828	0.02	5.23	15,000
Males 20+ years old	0.42	0.001807	0.41819	0.02	5.23	15,000
Seniors 55+	0.42	0.002035	0.41797	0.02	5.23	15,000

*DWLOC = Maximum Water Exposure (mg/kg/day) 1000 µg/mg body weight (70 kg general population/males 13+, 60 kg females 13+, 10 kg infants and children) ÷ Water Consumption (2 L/day adults, 1 L/day infants and children). The acute EEC is 5.23 µg/L.

TABLE 4. CHRONIC DRINKING WATER LEVELS OF COMPARISON FOR AGGREGATED EXPOSURES

Scenario/Population Subgroup	cPAD mg/kg/day	Food Exposure, mg/kg/day	Maximum Water Exposure, mg/kg/day	SCI-GROW (ground-water) ppb	PRZM/EXAMS (surface water) ppb	DWLOC* µg/L
U.S. Population	0.0038	0.000034	0.003766	0.02	1.58	130
All Infants (<1 year old)	0.0013	0.000018	0.001282	0.02	1.58	13
Children (1–6 years old)	0.0013	0.000045	0.001255	0.02	1.58	13
Children 7–12 years	0.0013	0.000040	0.001260	0.02	1.58	13
Females 13–50	0.0013	0.000029	0.001271	0.02	1.58	38

TABLE 4. CHRONIC DRINKING WATER LEVELS OF COMPARISON FOR AGGREGATED EXPOSURES—Continued

Scenario/Population Subgroup	cPAD mg/kg/day	Food Exposure, mg/kg/day	Maximum Water Exposure, mg/kg/day	SCI-GROW (groundwater) ppb	PRZM/EXAMS (surface water) ppb	DWLOC* µg/L
Males 13–19	0.0038	0.000024	0.003776	0.02	1.58	130
Males 20+ years old	0.0038	0.000034	0.003766	0.02	1.58	130
Seniors 55+	0.0038	0.000036	0.003764	0.02	1.58	130

*DWLOC = Maximum Water Exposure (mg/kg/day) 1,000 µg/mg body weight (70 kg general population/males 13+, 60 kg females 13+, 10 kg infants and children) ÷ Water Consumption (2 L/day adults, 1 L/day infants and children). The chronic and cancer EEC is 1.58 µg/L.

3. *From non-dietary exposure*. The term ''residential exposure'' is used in this document to refer to non-occupational, non-dietary exposure (e.g., for lawn and garden pest control, indoor pest control, termiticides, and flea and tick control on pets). Since the current proposed uses do not result in additional residential exposure, the Agency's earlier evaluation of approved residential uses, found in the **Federal Register** of August 9, 2000 (65 FR 48626–48634), will not be repeated here.

4. *Cumulative exposure to substances with a common mechanism of toxicity*. Section 408(b)(2)(D)(v) requires that, when considering whether to establish, modify, or revoke a tolerance, the Agency consider ''available information'' concerning the cumulative effects of a particular pesticide's residues and ''other substances that have a common mechanism of toxicity.''

Based on the information available to EPA, there are no other pesticides that have a common mechanism of toxicity with pymetrozine. Unlike other pesticides for which EPA has followed a cumulative risk approach based on a common mechanism of toxicity, pymetrozine does not appear to produce a toxic metabolite produced by other substances. For the purposes of this tolerance action, therefore, EPA has not assumed that pymetrozine has a common mechanism of toxicity with other substances. For information regarding EPA's efforts to determine which chemicals have a common mechanism of toxicity and to evaluate the cumulative effects of such chemicals, see the final rule for Bifenthrin Pesticide Tolerances (62 FR 62961, November 26, 1997).

D. Safety Factor for Infants and Children

1. *In general*. FFDCA section 408 provides that EPA shall apply an additional tenfold margin of safety for infants and children in the case of threshold effects to account for prenatal and postnatal toxicity and the completeness of the data base on toxicity and exposure unless EPA determines that a different margin of safety will be safe for infants and children. Margins of safety are incorporated into EPA risk assessments either directly through use of a margin of exposure (MOE) analysis or through using uncertainty (safety) factors in calculating a dose level that poses no appreciable risk to humans.

2. *Conclusion*. There is a complete toxicity database for pymetrozine and exposure data are complete or are estimated based on data that reasonably accounts for potential exposures. EPA determined that the 10X safety factor to protect infants and children could be reduced to 3. The FQPA factor is reduced after assessing the potential for additional sensitivity of infants and children to residues of pymetrozine in the following studies: developmental toxicity studies in rabbit and rat and two-generation reproduction study in the rat. There was no evidence of increased susceptibility in these studies. The FQPA safety factor was not reduced to one due to the need for a developmental neurotoxicity study.

E. Aggregate Risks and Determination of Safety

To estimate total aggregate exposure to a pesticide from food, drinking water, and residential uses, the Agency calculates DWLOCs which are used as a point of comparison against the model estimates of a pesticide's concentration in water (EECs). DWLOC values are not regulatory standards for drinking water. DWLOCs are theoretical upper limits on a pesticide's concentration in drinking water in light of total aggregate exposure to a pesticide in food and residential uses. In calculating a DWLOC, the Agency determines how much of the acceptable exposure (i.e., the PAD) is available for exposure through drinking water [e.g., allowable chronic water exposure (mg/kg/day) = cPAD - (average food + residential exposure)]. This allowable exposure through drinking water is used to calculate a DWLOC.

A DWLOC will vary depending on the toxic endpoint, drinking water consumption, and body weights. Default body weights and consumption values as used by the USEPA Office of Water are used to calculate DWLOCs: 2L/70 kg (adult male), 2L/60 kg (adult female), and 1L/10 kg (child). Default body weights and drinking water consumption values vary on an individual basis. This variation will be taken into account in more refined screening-level and quantitative drinking water exposure assessments. Different populations will have different DWLOCs. Generally, a DWLOC is calculated for each type of risk assessment used: acute, short-term, intermediate-term, chronic, and cancer.

When EECs for surface water and groundwater are less than the calculated DWLOCs, the Office of Pesticide Programs (OPP) concludes with reasonable certainty that exposures to the pesticide in drinking water (when considered along with other sources of exposure for which OPP has reliable data) would not result in unacceptable levels of aggregate human health risk at this time. Because OPP considers the aggregate risk resulting from multiple exposure pathways associated with a pesticide's uses, levels of comparison in drinking water may vary as those uses change. If new uses are added in the future, OPP will reassess the potential impacts of residues of the pesticide in drinking water as a part of the aggregate risk assessment process.

1. *Acute risk*. The Tier 1 exposure estimates provided by the acute dietary analysis are based on the assumption that tolerance-level residues are present in/on all commodities on which pymetrozine will be used and that 100% of these commodities are treated. The exposure estimates are therefore conservative ones. As shown in Table 3 of this preamble the acute EECs for pymetrozine are below EPA's level of concern. That is, they are below the DWLOC values calculated for the various population subgroups. Thus, residues of pymetrozine in food and

drinking water do not exceed the EPA's level of concern (100% of the aPAD) for acute aggregate exposure for any of the population subgroups. Based on its assumptions and underlying data, this risk assessment is considered confident, very conservative, and highly protective of human health.

2. *Chronic risk*. The Tier 3 exposure estimates provided by the chronic dietary analysis are based on anticipated residues and projected percent crop treated data. Anticipated residues (average field trial values) were calculated for the crops. The resulting exposure estimates are therefore refined ones. The chronic EECs for pymetrozine are below the Agency's level of concern. That is, as shown in Table 4 of this preamble, they are below the DWLOC values calculated for the various population subgroups. Thus, residues of pymetrozine in food and drinking water do not exceed the Agency's level of concern (100% of the cPAD) for chronic aggregate exposure for any of the population subgroups.

3. *Short-term risk*. Short-term aggregate exposure takes into account residential exposure plus chronic exposure to food and water (considered to be a background exposure level). In aggregating short-term risk, the Agency considered background average dietary exposure and short-term, non-dietary oral exposure. Non-dietary oral exposure may occur with toddlers as hand-to-mouth transfer of residues from ornamental plants or incidental ingestion of treated ornamental plants and/or surrounding soil. The highest estimated exposure via these routes is 0.0046 mg/kg/day which results from hand-to-mouth transfer of residues. Combining this exposure with the chronic dietary exposure estimate of 0.000045 mg/kg/day results in an aggregate exposure of 0.0046 mg/kg/day. In the absence of a short-term oral endpoint, EPA has used the acute dietary endpoint for infants and children (125 mg/kg/day) to estimate aggregate short-term risk. Note that this endpoint is based on a LOAEL and therefore has a 300–fold uncertainty factor associated with it. Combining the exposure estimate with the toxicological endpoint gives an MOE of 27,000. For this scenario, the Agency would be concerned with an MOE of less than 900; thus, this exposure is below EPA's level of concern. Aggregated short-term exposure results in a DWLOC of 1,400 ppb. This value is in excess of the peak EEC of 5.23 ppb for pymetrozine. Therefore, the short-term aggregate risk is below the Agency's level of concern.

4. *Intermediate-term risk*. Intermediate-term aggregate exposure takes into account residential exposure plus chronic exposure to food and water (considered to be a background exposure level). There are no intermediate-term residential exposure scenarios for pymetrozine based on the current uses. Therefore, aggregate intermediate-term risks do not exceed the Agency's level of concern.

5. *Aggregate cancer risk for U.S. population*. As with the chronic dietary exposure analysis, the cancer risk assessment is also based on a Tier 3 estimate of dietary exposure. The cancer aggregate risk consists of chronic dietary exposure as well as non-occupational exposure resulting from pruning and planting treated ornamental plants. The sum of the food and residential exposure is 0.000034 (food) + 0.0000012 (residential) = 3.5×10^{-5} mg/kg/day. Assuming a cancer risk limit of 1×10^{-6}, the cancer dose of concern is 8.4×10^{-5} mg/kg/day ($0.000001/Q_1^* = 0.000001/0.0119$). As 3.5×10^{-5} mg/kg/day is less than 8.4×10^{-5} mg/kg/day, the aggregate food and residential exposure is below the level of concern. With respect to drinking water, the cancer DWLOC is calculated to be 1.7 ppb. The highest EEC for any of the crops in these petitions is 1.6 ppb (pecans). As a result, the aggregate cancer risk resulting from use of pymetrozine is below the Agency's level of concern.

6. *Determination of safety*. Based on these risk assessments, EPA concludes that there is a reasonable certainty that no harm will result to the general population, and to infants and children from aggregate exposure to pymetrozine residues.

IV. Other Considerations

A. Analytical Enforcement Methodology

The Agency's Analytical Chemistry Laboratory has validated an enforcement methodology for pymetrozine (Syngenta Analytical Method AG–643A). It will be available to enforce the tolerance expression. The method may be requested from: Francis D. Griffith, Jr., Analytical Chemistry Branch, BEAD (7503C), 702 mapes Rd., Ft. George Meade, MD 20755–5350; telephone number: (410) 305–2905; e-mail address: griffin.francis@epa.gov.

B. International Residue Limits

There are no established European (CODEX), Canadian, or Mexican Maximum Residue Limits (MRL's) for pymetrozine. There are provisional MRLs in Germany for hops, dried (10 ppm) and potatoes (0.02 ppm). The European Union is currently evaluating a proposed tolerance of 5 ppm on hops, dried. There are proposed tolerances in Canada for tuberous and corm vegetables at 0.02 ppm, fruiting vegetables at 0.2 ppm, head and stem *Brassica* vegetables at 2.0 ppm, leafy *Brassica* vegetables at 5.0 ppm, leafy vegetables at 6.0 ppm, pecans at 0.02 ppm, hops (dried) at 5.0 ppm, citrus at 0.2 ppm, and cucurbits at 0.1 ppm. At this time, international harmonization of residue levels is not an issue.

C. Conditions

The Agency imposed the following conditions on pymetrozine at the time of the original Notices of Registration in the fall of 1999:

1. Storage stability (due December 2000).
2. Corrosion characteristics (due December 2000).
3. Acute estuarine/marine toxicity in shrimp (due October 2000)
4. Photodegradation on soil, 161–3, (due October 2000).
5. Developmental neurotoxicity Study, 870–6300 or 83–6, (due October 2001).
6. Avian reproduction (mallard), 71–4(b), (due October 2001).
7. Drinking water monitoring (originally due October 2002 but the requirement was no longer applicable after Cancer Q* was changed).

V. Conclusion

Therefore, the tolerances are established for residues of pymetrozine in or on cotton seed, undelinted at 0.3 ppm; cotton gin byproducts at 2.0 ppm; fruiting vegetables at 0.2 ppm; cucurbit vegetables at 0.1 ppm; leafy vegetables (except *Brassica*) at 0.6 ppm; head and stem *Brassica* vegetables at 0.5 ppm; leafy *Brassica* and turnip greens at 0.25 ppm, hops (dried) at 6.0 ppm; and pecans at 0.02 ppm.

VI. Objections and Hearing Requests

Under section 408(g) of the FFDCA, as amended by the FQPA, any person may file an objection to any aspect of this regulation and may also request a hearing on those objections. The EPA procedural regulations which govern the submission of objections and requests for hearings appear in 40 CFR part 178. Although the procedures in those regulations require some modification to reflect the amendments made to the FFDCA by the FQPA of 1996, EPA will continue to use those procedures, with appropriate adjustments, until the necessary modifications can be made. The new section 408(g) provides essentially the same process for persons to ''object'' to a regulation for an exemption from the requirement of a tolerance issued by EPA under new section 408(d), as was provided in the

old FFDCA sections 408 and 409. However, the period for filing objections is now 60 days, rather than 30 days.

A. What Do I Need to Do to File an Objection or Request a Hearing?

You must file your objection or request a hearing on this regulation in accordance with the instructions provided in this unit and in 40 CFR part 178. To ensure proper receipt by EPA, you must identify docket control number OPP–301180 in the subject line on the first page of your submission. All requests must be in writing, and must be mailed or delivered to the Hearing Clerk on or before February 25, 2002.

1. *Filing the request.* Your objection must specify the specific provisions in the regulation that you object to, and the grounds for the objections (40 CFR 178.25). If a hearing is requested, the objections must include a statement of the factual issues(s) on which a hearing is requested, the requestor's contentions on such issues, and a summary of any evidence relied upon by the objector (40 CFR 178.27). Information submitted in connection with an objection or hearing request may be claimed confidential by marking any part or all of that information as CBI. Information so marked will not be disclosed except in accordance with procedures set forth in 40 CFR part 2. A copy of the information that does not contain CBI must be submitted for inclusion in the public record. Information not marked confidential may be disclosed publicly by EPA without prior notice.

Mail your written request to: Office of the Hearing Clerk (1900), Environmental Protection Agency, 1200 Pennsylvania Ave., NW., Washington, DC 20460. You may also deliver your request to the Office of the Hearing Clerk in Rm. C400, Waterside Mall, 401 M St., SW., Washington, DC 20460. The Office of the Hearing Clerk is open from 8 a.m. to 4 p.m., Monday through Friday, excluding legal holidays. The telephone number for the Office of the Hearing Clerk is (202) 260–4865.

2. *Tolerance fee payment.* If you file an objection or request a hearing, you must also pay the fee prescribed by 40 CFR 180.33(i) or request a waiver of that fee pursuant to 40 CFR 180.33(m). You must mail the fee to: EPA Headquarters Accounting Operations Branch, Office of Pesticide Programs, P.O. Box 360277M, Pittsburgh, PA 15251. Please identify the fee submission by labeling it ''Tolerance Petition Fees.''

EPA is authorized to waive any fee requirement ''when in the judgement of the Administrator such a waiver or refund is equitable and not contrary to the purpose of this subsection.'' For additional information regarding the waiver of these fees, you may contact James Tompkins by phone at (703) 305–5697, by e-mail at tompkins.jim@epa.gov, or by mailing a request for information to Mr. Tompkins at Registration Division (7505C), Office of Pesticide Programs, Environmental Protection Agency, 1200 Pennsylvania Ave., NW., Washington, DC 20460.

If you would like to request a waiver of the tolerance objection fees, you must mail your request for such a waiver to: James Hollins, Information Resources and Services Division (7502C), Office of Pesticide Programs, Environmental Protection Agency, 1200 Pennsylvania Ave., NW., Washington, DC 20460.

3. *Copies for the Docket.* In addition to filing an objection or hearing request with the Hearing Clerk as described in Unit VI.A., you should also send a copy of your request to the PIRIB for its inclusion in the official record that is described in Unit I.B.2. Mail your copies, identified by docket control number OPP–301180, to: Public Information and Records Integrity Branch, Information Resources and Services Division (7502C), Office of Pesticide Programs, Environmental Protection Agency, 1200 Pennsylvania Ave., NW., Washington, DC 20460. In person or by courier, bring a copy to the location of the PIRIB described in Unit I.B.2. You may also send an electronic copy of your request via e-mail to: opp-docket@epa.gov. Please use an ASCII file format and avoid the use of special characters and any form of encryption. Copies of electronic objections and hearing requests will also be accepted on disks in WordPerfect 6.1/8.0 or ASCII file format. Do not include any CBI in your electronic copy. You may also submit an electronic copy of your request at many Federal Depository Libraries.

B. When Will the Agency Grant a Request for a Hearing?

A request for a hearing will be granted if the Administrator determines that the material submitted shows the following: There is a genuine and substantial issue of fact; there is a reasonable possibility that available evidence identified by the requestor would, if established resolve one or more of such issues in favor of the requestor, taking into account uncontested claims or facts to the contrary; and resolution of the factual issues(s) in the manner sought by the requestor would be adequate to justify the action requested (40 CFR 178.32).

VII. Regulatory Assessment Requirements

This final rule establishes a tolerance under FFDCA section 408(d) in response to a petition submitted to the Agency. The Office of Management and Budget (OMB) has exempted these types of actions from review under Executive Order 12866, entitled *Regulatory Planning and Review* (58 FR 51735, October 4, 1993). Because this rule has been exempted from review under Executive Order 12866 due to its lack of significance, this rule is not subject to Executive Order 13211, *Actions Concerning Regulations That Significantly Affect Energy Supply, Distribution, or Use* (66 FR 28355, May 22, 2001). This final rule does not contain any information collections subject to OMB approval under the Paperwork Reduction Act (PRA), 44 U.S.C. 3501 *et seq.*, or impose any enforceable duty or contain any unfunded mandate as described under Title II of the Unfunded Mandates Reform Act of 1995 (UMRA) (Public Law 104–4). Nor does it require any special considerations under Executive Order 12898, entitled *Federal Actions to Address Environmental Justice in Minority Populations and Low-Income Populations* (59 FR 7629, February 16, 1994); or OMB review or any other Agency action under Executive Order 13045, entitled *Protection of Children from Environmental Health Risks and Safety Risks* (62 FR 19885, April 23, 1997). This action does not involve any technical standards that would require Agency consideration of voluntary consensus standards pursuant to section 12(d) of the National Technology Transfer and Advancement Act of 1995 (NTTAA), Public Law 104–113, section 12(d) (15 U.S.C. 272 note). Since tolerances and exemptions that are established on the basis of a petition under FFDCA section 408(d), such as the tolerance in this final rule, do not require the issuance of a proposed rule, the requirements of the Regulatory Flexibility Act (RFA) (5 U.S.C. 601 *et seq.*) do not apply. In addition, the Agency has determined that this action will not have a substantial direct effect on States, on the relationship between the national government and the States, or on the distribution of power and responsibilities among the various levels of government, as specified in Executive Order 13132, entitled *Federalism*(64 FR 43255, August 10, 1999). Executive Order 13132 requires EPA to develop an accountable process to ensure ''meaningful and timely input by State and local officials in the development of regulatory policies that

have federalism implications.'' ''Policies that have federalism implications'' is defined in the Executive Order to include regulations that have ''substantial direct effects on the States, on the relationship between the national government and the States, or on the distribution of power and responsibilities among the various levels of government.'' This final rule directly regulates growers, food processors, food handlers and food retailers, not States. This action does not alter the relationships or distribution of power and responsibilities established by Congress in the preemption provisions of FFDCA section 408(n)(4). For these same reasons, the Agency has determined that this rule does not have any tribal implications as described in Executive Order 13175, entitled *Consultation and Coordination with Indian Tribal Governments* (65 FR 67249, November 6, 2000). Executive Order 13175, requires EPA to develop an accountable process to ensure meaningful and timely input by tribal officials in the development of regulatory policies that have tribal implications. Policies that have tribal implications is defined in the Executive Order to include regulations that have substantial direct effects on one or more Indian tribes, on the relationship between the Federal government and the Indian tribes, or on the distribution of power and responsibilities between the Federal government and Indian tribes. This rule will not have substantial direct effects on tribal governments, on the relationship between the Federal government and Indian tribes, or on the distribution of power and responsibilities between the Federal government and Indian tribes, as specified in Executive Order 13175. Thus, Executive Order 13175 does not apply to this rule.

VIII. Submission to Congress and the Comptroller General

The Congressional Review Act, 5 U.S.C. 801 *et seq.*, as added by the Small Business Regulatory Enforcement Fairness Act of 1996, generally provides that before a rule may take effect, the agency promulgating the rule must submit a rule report, which includes a copy of the rule, to each House of the Congress and to the Comptroller General of the United States. EPA will submit a report containing this rule and other required information to the U.S. Senate, the U.S. House of Representatives, and the Comptroller General of the United States prior to publication of this final rule in the **Federal Register**. This final rule is not a ''major rule'' as defined by 5 U.S.C. 804(2).

List of Subjects in 40 CFR Part 180

Environmental protection, Administrative practice and procedure, Agricultural commodities, Pesticides and pests, Reporting and recordkeeping requirements.

Dated: December 17, 2001.

Peter Caulkins,

Acting Director, Registration Division, Office of Pesticide Programs.

Therefore, 40 CFR chapter I is amended as follows:

PART 180— [AMENDED]

1. The authority citation for part 180 continues to read as follows:

Authority: 21 U.S.C. 321(q), 346(a) and 371.

2. Section 180.556 is amended by revising paragraph (a) to read as follows:

§ 180.556 Pymetrozine; tolerances for residues.

(a) *General.* Tolerances are established for residues of the insecticide pymetrozine 1,2,4-triazin-3(2H)-one,4,5-dihydro-6-methyl-4-[(3-pyridinylmethylene) amino] in or on the following raw agricultural commodities. The tolerance level for each commodity is expressed in terms of the parent insecticide only, which serves as an indicator of the use of pymetrozine on these raw agricultural commodities.

Commodity	Parts per million
Brassica, head and stem, subgroup (Crop Subgroup 5-A)	0.5
Brassica, leafy greens, subgroup (Crop Subgroup 5-B)	0.25
Cotton gin byproducts	2.0
Cotton, undelinted seed	0.3
Hops, dried cones	6.0
Pecans	0.02
Turnip, greens	0.25
Vegetable, fruiting, group (Crop Group 8)	0.2
Vegetable, cucurbit, group (Crop Group 9)	0.1
Vegetable, leafy, execpt brassica, group (Crop Group 4)	0.6
Vegetable, tuberous and corm, subgroup (Crop Subgroup 1-C)	0.02

* * * * *

[FR Doc. 01–31801 Filed 12–26–01; 8:45 am]

BILLING CODE 6560–50–S

GENERAL SERVICES ADMINISTRATION

41 CFR Chapter 301

[FTR Amendment 99]

RIN 3090–AH51

Federal Travel Regulation; Maximum Per Diem Rates

AGENCY: Office of Governmentwide Policy, GSA.

ACTION: Final rule.

SUMMARY: This final rule amends the Federal Travel Regulation (FTR), Amendment 97, published in the **Federal Register** of Friday, August 31, 2001. This final rule updates the table of prescribed maximum per diem rates for the continental United States (CONUS) by revising previous entries and adding new entries.

EFFECTIVE DATE: October 1, 2001.

FOR FURTHER INFORMATION CONTACT: Joddy P. Garner, Office of Governmentwide Policy (MTT), Washington, DC 20405, telephone 202-501–4857.

SUPPLEMENTARY INFORMATION:

A. Background

The General Services Administration (GSA), after an analysis of additional data, is revising previous entries and adding new entries that were inadvertently omitted from FTR Amendment 97 published as Part II in the **Federal Register** of Friday, August 31, 2001 (66 FR 46070). This final rule revises the key city for Pontiac/Troy, Michigan, and the county and/or other defined locations for Denver, Colorado; Anoka County, Minnesota; Harrisburg and Hershey, Pennsylvania; and Sturgis, South Dakota. This final rule further adds new per diem city/county localities and rates for Dinwiddie County, Hopewell, Petersburg, and Prince George County, Virginia. In addition, this final rule revises footnote four (4) of the per diem rate table.

B. Executive Order 12866

GSA has determined that this final rule is not a significant regulatory action for the purposes of Executive Order 12866 of September 30, 1993.

C. Regulatory Flexibility Act

This final rule is not required to be published in the **Federal Register** for notice and comment; therefore, the Regulatory Flexibility Act, 5 U.S.C. 601 *et seq.*, does not apply.

D. Paperwork Reduction Act

The Paperwork Reduction Act does not apply because this final rule does

not impose recordkeeping or information collection requirements, or the collection of information from offerors, contractors, or members of the public which require the approval of the Office of Management and Budget under 44 U.S.C. 501 *et seq.*

E. Small Business Regulatory Enforcement Fairness Act

This final rule is also exempt from congressional review prescribed under 5 U.S.C. 801 since it relates solely to agency management and personnel.

List of Subjects in 41 CFR Chapter 301

Government employees, Travel and transportation expenses.

For the reasons set forth in the preamble, under 5 U.S.C. 5701–5709, 41 CFR chapter 301 is amended as follows:

CHAPTER 301—Temporary Duty (TDY) Travel Allowances

Appendix A to Chapter 301 [Amended]

1. Appendix A to chapter 301 is amended as follows:

a. On the page that includes entries for the State of Colorado, under the State of Colorado, city of Denver, column two (County and/or other defined location) is revised to read ''Denver, Adams, and Arapahoe Counties, that portion of Westminster located in Jefferson County, and Lone Tree in Douglas County''.

b. On the page that includes entries for the States of Massachusetts and Michigan, under the State of Michigan, in the first column, the last entry, ''Pontiac/Troy'', is revised to read ''Pontiac/Troy/Auburn Hills''.

c. On the page that includes entries for the State of Michigan and Minnesota:

i. Under the State of Michigan, the entry for ''Auburn Hills'' is removed.

ii. Under the State of Minnesota, city of Anoka County, column two (County and/or other defined location) is revised to read ''Anoka''.

d. On the page that includes entries for the State of Pennsylvania:

i. Under the State of Pennsylvania, city of Harrisburg, column two (County and/or other defined location) is revised to read ''Dauphin (except Hershey)''.

ii. Under the State of Pennsylvania, city of Hershey, column two (County and/or other defined location) is revised to read ''City limits of Hershey (see Dauphin County)''.

e. On the page that includes entries for the State of South Dakota, city of Sturgis, column two (County and/or other defined location) is revised to read ''Meade''.

f. On the page beginning with the entry for Colonial Heights, Virginia:

i. Under the State of Virginia, a new entry is added after the city of Colonial Heights, to read: (column one) ''Dinwiddie County''; (column two) ''Dinwiddie''; (column three) ''77''; (column four) ''30''; (column five) ''107''.

ii. Under the State of Virginia, a new entry is added after the new entry for Dinwiddie County, to read: (column one) ''Hopewell''; (column three) ''77''; (column four)''30''; (column five) ''107''.

iii. Under the State of Virginia, a new entry is added after the city of Manassas/Woodbridge, to read: (column one) ''Petersburg''; (column three) ''77''; (column four) ''30''; (column five) ''107''.

iv. Under the State of Virginia, a new entry is added after the new entry for Petersburg, to read: (column one) ''Prince George County''; (column two) ''Prince George'', (column three) ''77''; (column four)''30''; (column five) ''107''.

g. Note four at the end of the table is revised.

The revised pages containing the amendments to the table set forth above and a new page containing the notes to the table as amended above read as follows:

Appendix A to Chapter 301—Prescribed Maximum Per Diem Rates for CONUS

* * * * *

BILLING CODE 6820–14–P

Per diem locality: Key city[1]	County and/or other defined location [2], [3]	Maximum lodging amount **(room rate only—no taxes)** (a)	+	M&IE rate (b)	=	Maximum per diem rate [4] (c)
(October 1-June 14)		63		42		105
Visalia	Tulare	69		38		107
West Sacramento	Yolo	69		30		99
Yosemite National Park	Mariposa					
(May 1-September 30)		114		46		160
(October 1-April 30)		82		46		128
COLORADO						
Aspen	Pitkin					
(January 1-April 30)		145		46		191
(May 1-December 31)		89		46		135
Boulder	Boulder	93		42		135
Colorado Springs	El Paso					
(May 15-September 15)		73		38		111
(September 16-May 14)		59		38		97
Cortez	Montezuma	69		34		103
Crested Butte	City limits of Crested Butte (see Gunnison Co.)					
(November 15-April 15)		97		42		139
(April 16-June 15)		58		42		100
(June 16-November 14)		71		42		113
Denver	Denver, Adams, and Arapahoe Counties, that portion of Westminster located in Jefferson County, and Lone Tree in Douglas County.	112		42		154
Durango	La Plata					
(May 15-September 30)		99		38		137
(October 1-May 14)		70		38		108
Fort Collins	Larimer (except Loveland)	76		34		110
Glenwood Springs	Garfield					
(May 15-October 15)		95		30		125
(October 16-May 14)		55		30		85
Gunnison	Gunnison (except Crested Butte)					
(May 15-September 30)		70		34		104
(October 1-May 14)		55		34		89
Jefferson County	Jefferson	94		34		128
Loveland	City limits of Loveland (see Larimer County)	69		30		99
Montrose	Montrose	69		34		103
Pueblo	Pueblo					
(June 1-September 30)		72		34		106
(October 1-May 31)		58		34		92
Silverthorne/Keystone	Summit	170		38		208
Steamboat Springs	Routt	59		38		97
Telluride	San Miguel					
(December 20-September 30)		147		46		193
(October 1-December 19)		85		46		131
Trinidad	Las Animas	62		30		92
Vail	Eagle					
(December 1-March 31)		200		46		246
(April 1-November 30)		105		46		151
CONNECTICUT						
Bridgeport/Danbury	Fairfield	109		38		147

Per diem locality:		Maximum lodging amount **(room rate only—no taxes)** (a)	+	M&IE rate (b)	=	Maximum per diem rate [4] (c)
Key city[1]	County and/or other defined location [2], [3]					
Falmouth	City limits of Falmouth					
(June 1-September 30)		105		38		143
(October 1-May 31)		70		38		108
Hyannis	Barnstable	94		38		132
Lowell	City limits of Lowell (except Cambridge) (see Middlesex County)	99		34		133
Martha's Vineyard	Dukes					
(June 1-October 15)		150		46		196
(October 16-May 31)		85		46		131
Nantucket	Nantucket					
(June 15-October 15)		150		46		196
(October 16-June 14)		75		46		121
New Bedford	City limits of New Bedford (see Bristol County)					
(May 15-October 15)		75		34		109
(October 16-May 14)		65		34		99
Northampton	Hampshire	72		34		106
Pittsfield	Berkshire	65		38		103
Plymouth	Plymouth					
(June 15-October 15)		119		34		153
(October 16-June 14)		99		34		133
Quincy	Norfolk	74		38		112
Springfield	Hampden	99		34		133
Taunton	Bristol (except New Bedford)	74		30		104
Worcester	Worcester	79		34		113
MICHIGAN						
Ann Arbor	Washtenaw	75		38		113
Berrien County	Berrien	59		30		89
Charlevoix	Charlevoix					
(June 1-August 31)		105		38		143
(September 1-May 31)		59		38		97
Detroit	Wayne	109		46		155
East Lansing/Lansing	Ingham	65		38		103
Frankenmuth	Saginaw	69		34		103
Frankfort	Benzie	62		34		96
Gaylord	Otsego	65		38		103
Grand Rapids	Kent	62		34		96
Holland	Ottawa	60		34		94
Leland	Leelanau	75		34		109
Mackinac Island	Mackinac	165		46		211
Midland	Midland	72		34		106
Mount Pleasant	Isabella	65		34		99
Muskegon	Muskegon					
(May 1-August 31)		79		30		109
(September 1-April 30)		59		30		89
Ontonagon	Ontonagon	65		30		95
Petoskey	Emmet					
(June 1-October 31)		65		38		103
(November 1- May 31)		55		38		93
Pontiac/Troy/Auburn Hills	Oakland	94		38		132

Per diem locality: Key city[1]	County and/or other defined location [2, 3]	Maximum lodging amount **(room rate only—no taxes)** (a)	+	M&IE rate (b)	=	Maximum per diem rate [4] (c)
Sault Ste Marie	Chippewa					
(May 15-October 15)		63		34		97
(October 16-May 14)		55		34		89
South Haven	Van Buren	76		34		110
Traverse City	Grand Traverse	125		42		167
Warren	Macomb	79		34		113
MINNESOTA						
Anoka County	Anoka	65		34		99
Dakota County	Dakota	80		34		114
Duluth	St. Louis					
(June 1-October 31)		85		42		127
(November 1-May 31)		56		42		98
Minneapolis/St. Paul	Hennepin County and Fort Snelling Military Reservation and Navy Astronautics Group (Detachment BRAVO), and Ramsey County	95		46		141
Rochester	Olmsted	73		34		107
MISSISSIPPI						
Bay St. Louis	Hancock					
(April 1-October 31)		69		38		107
(November 1-March 31)		55		38		93
Biloxi/Gulfport	Harrison	72		38		110
Robinsonville	Tunica	59		34		93
MISSOURI						
Branson	Taney					
(April 1-December 31)		62		34		96
(January 1-March 31)		55		34		89
Hannibal	Marion	57		30		87
Jefferson City	Cole	60		30		90
Kansas City	Jackson, Clay and Kansas City International Airport	85		42		127
Osage Beach	Camden	89		30		119
Platte	Platte (except Kansas City International Airport)	61		34		95
Springfield	Greene	63		30		93
St. Louis	St. Louis and St. Charles	90		46		136
MONTANA						
Big Sky	Gallatin (except West Yellowstone)	125		46		171
Polson/Kalispell	Lake and Flathead					
(June 1-September 15)		64		30		94
(September 16-May 31)		55		30		85
West Yellowstone	City limits of West Yellowstone (see Gallatin County)					
(June 1-September 30)		92		34		126
(October 1-May 31)		55		34		89

Per diem locality: Key city[1]	County and/or other defined location [2], [3]	Maximum lodging amount **(room rate only—no taxes)** (a)	+	M&IE rate (b)	=	Maximum per diem rate [4] (c)
Oklahoma City	Oklahoma	65		38		103
OREGON						
Ashland	Jackson	59		42		101
Beaverton	Washington	59		38		97
Bend	Deschutes					
(June 1-September 30)		69		38		107
(October 1-May 31)		59		38		97
Clackamas	Clackamas	66		34		100
Crater Lake	Klamath	74		38		112
Eugene	Lane (except Florence)	62		38		100
Florence	City limits of Florence (see Lane County)	80		34		114
Gold Beach	Curry	58		30		88
Lincoln City/Newport	Lincoln	65		34		99
Portland	Multnomah	77		38		115
Seaside	Clatsop					
(July 1-August 31)		79		34		113
(September 1-June 30)		59		34		93
PENNSYLVANIA						
Allentown	Lehigh	62		30		92
Chester/Radnor/Essington	Delaware (except Wayne)	75		34		109
Easton	Northampton	69		34		103
Erie	Erie	65		30		95
Gettysburg	Adams					
(May 1-October 31)		82		34		116
(November 1-April 30)		55		34		89
Harrisburg	Dauphin (except Hershey)	79		42		121
Hershey	City limits of Hershey (see Dauphin County)					
(June 1-September 15)		125		42		167
(September 16-May 31)		55		42		97
King of Prussia/Ft. Washington/Bala Cynwyd	Montgomery					
(April 1-November 30)		119		42		161
(December 1-March 31)		99		42		141
Lancaster	Lancaster					
(May 1-October 31)		70		38		108
(November 1-April 30)		60		38		98
Malvern/Downington/Valley Forge	Chester	83		38		121
Mechanicsburg	Cumberland	74		34		108
Philadelphia	Philadelphia	118		46		164
Pittsburgh	Allegheny	79		46		125
Reading	Berks	75		38		113
Scranton	Lackawanna	60		30		90
Warminster	Bucks County; Naval Air Development Center	75		42		117
Wayne	City limits of Wayne (see Delaware County)	100		42		142
RHODE ISLAND						
East Greenwich	Kent County; Naval Construction Battalion Center, Davisville	79		38		117
Newport	Newport					

Per diem locality: Key city[1]	County and/or other defined location [2, 3]	Maximum lodging amount **(room rate only—no taxes)** (a)	+	M&IE rate (b)	=	Maximum per diem rate [4] (c)
(April 1-December 31)		111		42		153
(January 1-March 31)		79		42		121
North Kingstown	Washington	89		30		119
Providence	Providence	89		42		131
SOUTH CAROLINA						
Aiken	Aiken	65		30		95
Charleston/Berkeley County	Charleston and Berkeley	99		42		141
Columbia	Richland	65		30		95
Greenville	Greenville	65		38		103
Hilton Head	Beaufort					
(March 15-September 30)		95		42		137
(October 1-March 14)		75		42		117
Myrtle Beach	Horry County; Myrtle Beach AFB					
(March 1-November 30)		99		42		141
(December 1-February 28)		59		42		101
SOUTH DAKOTA						
Custer	Custer					
(June 15-August 19)		70		30		100
(August 20-June 14)		55		30		85
Hot Springs	Fall River					
(June 15-October 15)		108		30		138
(October 16-June 14)		79		30		109
Rapid City	Pennington					
(May 15-September 30)		99		34		133
(October 1-May 14)		55		34		89
Sturgis	Meade					
(June 15-August 15)		79		30		109
(August 16-June 14)		55		30		85
TENNESSEE						
Alcoa/Townsend	Blount	63		34		97
Gatlinburg	Sevier					
(May 1-October 31)		78		38		116
(November 1-April 30)		70		38		108
Memphis	Shelby	70		38		108
Murfreesboro	Rutherford	57		30		87
Nashville	Davidson	82		42		124
Williamson County	Willamson	60		30		90
TEXAS						
Amarillo	Potter	57		30		87
Arlington	Tarrant	77		34		111
Austin	Travis	80		38		118
Bryan	Brazos (except College Station)	60		30		90
College Station	City limits of College Station (see Brazos County)	69		34		103
Corpus Christi	Nueces	59		38		97
Dallas	Dallas	89		46		135
El Paso	El Paso	78		38		116

Per diem locality: Key city[1]	County and/or other defined location [2], [3]	Maximum lodging amount **(room rate only—no taxes)** (a)	+	M&IE rate (b)	=	Maximum per diem rate [4] (c)
Colonial Heights*		77		30		107
Dinwiddie County	Dinwiddie	77		30		107
Hopewell		77		30		107
Lynchburg*		64		38		102
Manassas/Woodbridge	Prince William	84		34		118
Petersburg		77		30		107
Prince George County	Prince George	77		30		107
Richmond*	Chesterfield and Henrico Counties, also Defense Supply Center	77		38		115
Roanoke*		59		34		93
Virginia Beach*	Virginia Beach (also Norfolk, Portsmouth and Chesapeake)*					
(April 1-October 31)		109		38		147
(November 1-March 31)		55		38		93
Wallops Island	Accomack					
(June 1-September 5)		89		34		123
(September 6-May 31)		69		34		103
Williamsburg*	Williamsburg (also Hampton, Newport News, York County, Naval Weapons Station, Yorktown)*					
(April 1-October 31)		99		38		137
(November 1-March 31)		59		38		97
Wintergreen	Nelson	125		46		171
*Denotes independent cities.						
WASHINGTON						
Anacortes	Skagit and Island	64		38		102
Bremerton	Kitsap	61		34		95
Everett	Snohomish (except Lynnwood)	59		38		97
Friday Harbor	San Juan					
(May 1-September 30)		95		42		137
(October 1-April 30)		65		42		107
Lynnwood	City limits of Lynnwood (see Snohomish County)	89		34		123
Ocean Shores	Grays Harbor					
(April 1-September 30)		82		38		120
(October 1-March 31)		55		38		93
Olympia/Tumwater	Thurston	58		38		96
Port Angeles	City limits of Port Angeles (see Clallam County)	65		38		103
Port Townsend	Jefferson	79		34		113
Seattle	King	109		46		155
Sequim	Clallam (except Port Angeles)					
(June 29 -September 1)		62		34		96
(September 2 -June 28)		55		34		89
Spokane	Spokane	63		38		101
WEST VIRGINIA						
Berkeley Springs	Morgan	69		34		103
Charleston	Kanawha	78		38		116
Martinsburg/Hedgesville	Berkeley	59		30		89

Per diem locality: Key city[1]	County and/or other defined location [2], [3]	Maximum lodging amount **(room rate only—no taxes)** (a)	+	M&IE rate (b)	=	Maximum per diem rate [4] (c)
Morgantown	Monongalia	66		34		100
Shepherdstown	Jefferson	79		38		117
Wheeling	Ohio	71		34		105
WISCONSIN						
Brookfield	Waukesha	66		38		104
Green Bay	Brown	59		34		93
Lake Geneva	Walworth					
(June 1-September 4)		85		38		123
(September 5-May 31)		66		38		104
Madison	Dane	62		38		100
Milwaukee	Milwaukee	95		42		137
Racine	Racine	80		30		110
Sheboygan	Sheboygan	59		30		89
Sturgeon Bay	Door					
(May 15-October 15)		81		34		115
(October 16-May 14)		56		34		90
Wisconsin Dells	Columbia					
(June 1-September 30)		85		38		123
(October 1-May 31)		55		38		93
WYOMING						
Cody	Park					
(May 15-October 15)		98		30		128
(October 16-May 14)		55		30		85
Jackson	Teton					
(November 1-September 15)		115		42		157
(September 16-October 31)		69		42		111

[1] Unless otherwise specified, the per diem locality is defined as "all locations within, or entirely surrounded by, the corporate limits of the key city, including independent entities located within those boundaries."

[2] Per diem localities with county definitions shall include "all locations within, or entirely surrounded by, the corporate limits of the key city as well as the boundaries of the listed counties, including independent entities located within the boundaries of the key city and the listed counties (unless otherwise listed separately)."

[3] When a military installation or Government-related facility (whether or not specifically named) is located partially within more than one city or county boundary, the applicable per diem rate for the entire installation or facility is the higher of the two rates which apply to the cities and/or counties, even though part(s) of such activities may be located outside the defined per diem locality.

[4] Federal agencies may submit a request to GSA for review of the costs covered by per diem in a particular city or area where the standard CONUS rate applies when travel to that location is repetitive or on a continuing basis and travelers' experiences indicate that the prescribed rate is inadequate. Other per diem localities listed in this appendix will be reviewed on an annual basis by GSA to determine whether rates are adequate. Requests for per diem rate adjustments shall be submitted by the agency headquarters office to the General Services Administration, Office of Governmentwide Policy, Attn: Travel and Transportation Management Policy Division (MTT), Washington, DC 20405. Agencies should submit their request to GSA no later than 2/27 for the city to be included in the annual review. Agencies should designate an individual responsible for reviewing, coordinating, and submitting to GSA any requests from bureaus or subagencies. Requests for rate adjustments shall include a city designation, a description of the surrounding location involved (county or other defined area), and a recommended rate supported by a statement explaining the circumstances that cause the existing rate to be inadequate. The request also must contain an estimate of the annual number of trips to the location, the average duration of such trips, and the primary purpose of travel to the location.

[5] The standard CONUS rate of $85 ($55 for lodging and $30 for M&IE) applies to all per diem localities in the State of North Dakota.

Note: Recognizing that all locations are not incorporated cities, the term "city limits" has been used as a general phrase to denote the commonly recognized local boundaries of the location cited.

* * * * *

Dated: December 14, 2001.

Stephen A. Perry,

Administrator of General Services.

[FR Doc. 01–31776 Filed 12–26–01; 8:45 am]

BILLING CODE 6820–14–C

FEDERAL COMMUNICATIONS COMMISSION

47 CFR Part 73

[DA 01–2846; MM Docket No. 00–173; RM–9964, RM–10328]

Radio Broadcasting Services; Burgin and Science Hill, KY

AGENCY: Federal Communications Commission

ACTION: Final rule.

SUMMARY: At the request of Vernon R. Baldwin this document allots Channel 290A to Burgin, Kentucky. At the request of Pulaski County Broadcasting, this document also allots Channel 291A to Science Hill, Kentucky. *See* 65 FR 59164, published October 4, 2000. The reference coordinates for the Channel 290A allotment at Burgin, Kentucky, are 37–48–37 and 84–41–30. The reference coordinates for the Channel 291A allotment at Science Hill, Kentucky, are 37–10–36 and 84–29–10.

DATES: Effective January 22, 2002.

FOR FURTHER INFORMATION CONTACT: Robert Hayne, Mass Media Bureau (202) 418–2177.

SUPPLEMENTARY INFORMATION: This is a synopsis of the Commission's *Report and Order* in MM Docket No. 00–173, adopted December 5, 2001, and released December 7, 2001. The full text of this decision is available for inspection and copying during normal business hours in the FCC's Reference Information Center at Portals II, CY–A257, 445 12th Street, SW., Washington, DC. The complete text of this decision may also be purchased from the Commission's copy contractor, Qualex International, Portals ll, 445 12th Street, SW., Room CY–B402, Washington, DC 20554, telephone 202–863–2893, facsimile 202–863–2898, or via e-mail qualexint@aol.com

List of Subjects in 47 CFR Part 73

Radio Broadcasting.

Part 73 of Title 47 of the Code of Federal Regulations is amended as follows:

PART 73—RADIO BROADCAST SERVICES

1. The authority citation for Part 73 continues to read as follows:

Authority: 47 U.S.C. 154, 303, 334, 336.

§ 73.202 [Amended]

2. Section 73.202(b), the Table of FM Allotments under Kentucky, is amended by adding Burgin, Channel 290A and by adding Science Hill, Channel 291A.

Federal Communications Commission.

John A. Karousos,

Chief, Allocations Branch, Policy and Rules Division, Mass Media Bureau.

[FR Doc. 01–31830 Filed 12–26–01; 8:45 am]

BILLING CODE 6712–01–P

DEPARTMENT OF THE INTERIOR

Fish and Wildlife Service

50 CFR Part 17

RIN: 1018–AI19

Endangered and Threatened Wildlife and Plants; Listing the Tumbling Creek Cavesnail as Endangered

AGENCY: Fish and Wildlife Service, Interior.

ACTION: Emergency rule.

SUMMARY: We, the Fish and Wildlife Service (Service), exercise our authority to emergency list the Tumbling Creek cavesnail (*Antrobia culveri*) as endangered under the Endangered Species Act of 1973, as amended (Act). This species is known to occur in one cave in Missouri. The distribution of this species has decreased in Tumbling Creek by 90 percent since 1974. Although cavesnail numbers fluctuated seasonally and annually between 1996 and 2000, the species was not found in the monitored section of the cave stream during five surveys in 2001. Because the sudden population decline demonstrates a significant and imminent risk to the well-being of the Tumbling Creek cavesnail, we find that emergency listing is necessary to provide Federal protection pursuant to the Act for 240 days. A proposed rule to list the Tumbling Creek cavesnail as endangered is published concurrently with this emergency rule, and can be found in this issue of the **Federal Register** in the proposed rules section.

DATES: This emergency rule becomes effective December 27, 2001 and expires August 26, 2002.

ADDRESSES: The complete file for this rule is available for inspection, by appointment, during normal business hours at the U.S. Fish and Wildlife Service, Columbia, Missouri Field Office, 608 E. Cherry St., Room 200, Columbia, Missouri 65201–7712.

FOR FURTHER INFORMATION CONTACT: Paul McKenzie, Ph.D., Columbia, Missouri Field Office, at the address listed above (telephone: 573–876–1911, ext. 107; e-mail: paul__mckenzie@fws.gov; facsimile: 573–876–1914). Individuals who are hearing-impaired or speech-impaired may call the Federal Relay Service at 1–800–877–8337 for TTY assistance.

SUPPLEMENTARY INFORMATION:

Background

The Tumbling Creek cavesnail (*Antrobia culveri*) was described as a new species by Hubricht (1971) from specimens taken by David Culver, Thomas Aley, and Leslie Hubricht in 1969 and 1970. *Antrobia culveri* is the type species for the genus *Antrobia*, also described new to science in 1971 by Hubricht. Hershler and Hubricht (1988) examined specimens of *Antrobia culveri* and confirmed the taxonomic placement of this species in the subfamily Littoridininae of the Gastropod family Hydrobiidae. They also noted the apparent close relatedness of the genus *Antrobia* to the genus *Fontigens*, which contains cave-adapted snails found in other Missouri caves and springs. The Tumbling Creek cavesnail is a small, white, blind, aquatic snail (height 2.3 millimeters (mm) (0.09 inches (in); diameter 2.0 mm (0.08 in); aperture height 1.2 mm (0.05 in); aperture diameter 1.1 mm (0.04 in)) with a small, conical, well-rounded, pale-yellow shell containing about 3.5 whorls (Hubricht 1971). The Tumbling Creek cavesnail is restricted to a single cave stream in Tumbling Creek Cave in Taney County, southwestern Missouri.

Greenlee (1974) provided the first information on the habitat of the species. He reported that the species was found primarily on ''3 inch gravel substrate'' (presumably meaning small stones or cobble of 3-inch diameter), with a few individuals observed using the recesses of a solid rock stream bottom. Greenlee (1974) did not note whether the snails used the upper or lower surface of the 3-inch gravel he observed them on, or whether the species was ever observed using larger rocks within the cave stream. Subsequent surveyors, however, have failed to document *Antrobia culveri* using a solid rock bottom, and the species is usually observed on the undersurface of rocks with a diameter greater than 3 inches (Ashley 2000). Additionally, Greenlee (1974) stated that the Tumbling Creek cavesnail was absent from areas of the stream that contained bat guano. Subsequent observers (McKenzie *in litt.* 1996; Ashley 2000, 2001a, 2001b) have noted *Antrobia culveri* in portions of Tumbling Creek where bat guano occurs. Finally, Greenlee (1974) and subsequent observers have all noted that the species appears to prefer areas of the stream that lack silt.

Although little is known regarding the life history of this cavesnail, Greenlee (1974) postulated that the species feeds on aquatic microfauna. Because Tumbling Creek cavesnails have been concentrated in sections of Tumbling Creek Cave that are usually adjacent to large deposits of bat guano, it has been theorized that *Antrobia culveri* is indirectly dependent upon these deposits for food (Greenlee 1974). Other life history aspects of this species, including its reproductive behavior, are unknown. Although little is known about the longevity or movements of this species, some limited information is available on the frequency of shell sizes within the population across different seasons. Ashley (2000) examined shell length data collected between 1996 and 2000 and noted that the average length of *Antrobia culveri* shells exhibited a slight peak during summer months but further noted that the difference was not statistically significant. Ashley (2000) also analyzed the frequency distribution of cavesnail shell lengths from fall data collected between 1997 and 2000 and noted a decrease in the frequency of smaller shells over that period. Ashley (2000) concluded that both fewer snails and fewer snails in the younger age classes were observed in the more recent fall visits conducted from 1997 through 2000. This suggests that there has been a reduction in recruitment of younger age classes into the population between 1997 and 2000.

Tumbling Creek Cave is a highly diverse cave (Thomas Aley, Ozark Underground Laboratory (OUL), *in litt.* 1978; Cecil Andrus, USDI, *in litt.* 1980). In addition to species included in the Missouri Department of Conservation's (MDC) Checklist of Species of Conservation Concern (Missouri Natural Heritage Program 2001) (e.g., a cave millipede (*Scoterpes dendropus*)), *Antrobia culveri* is associated with at least three, possibly six, species that are new to science but have not yet been formally described: a millipede (*Chaetaspis* sp.), a terrestrial isopod (*Caucasonethes* sp.), an amphipod (*Stygobromus* sp.), a dipluran (*Plusiocampa sp.*), a phalangodid harvestman (*Phalangium* sp.), and a cave spider (*Islandiana* sp.). Tumbling Creek Cave also provides habitat for a large maternity colony of federally listed gray bats (*Myotis grisescens*), with a recent estimated breeding population of 12,400 in 1998 (Dr. William Elliott, MDC, *in litt.* October 9, 2001). Historically, the breeding population included an estimated 50,000 individuals (MDC 1992, Missouri Natural Heritage Program 2000). There have also been historical observations of a very small hibernating population of the federally listed Indiana bat (*Myotis sodalis*). However, the Indiana bat has not been documented at the site since 1989 (Missouri Natural Heritage Program 2000). The Gray Bat Recovery Plan lists Tumbling Creek Cave as a ''Priority 1'' cave. Priority 1 gray bat caves have the highest level of biological significance for a gray bat maternity site (i.e., a cave deemed to be ''absolutely essential'' in preventing the extinction of the endangered gray bat) (U.S. Fish and Wildlife Service 1982).

Tumbling Creek Cave is owned by Tom and Cathy Aley of Protem, Missouri. Because of its rich cave fauna, the large maternity colony for the endangered gray bat, and its diverse physical features, Tumbling Creek Cave was designated as a National Natural Landmark and approved for inclusion on the National Registry of Natural Landmarks under the authority of the Historic Sites Act of 1935 (49 Stat. 666; 16 U.S.C. 461 *et seq.*) (Cecil Andrus, USDI, *in litt.*, 1980; 48 FR 8693). Tumbling Creek Cave and approximately 395 acres surrounding the cave were embodied in the designation, including about 140 surface acres owned by the Aleys and about 255 surface acres owned by two adjacent property owners.

Status and Distribution

Antrobia culveri is known only from Tumbling Creek Cave in Taney County, southwestern Missouri. In an extensive survey of publicly and privately owned Missouri caves, no additional populations of this cavesnail were discovered (Gardner 1986). Recent surveys conducted in nearby caves and springs by Dr. David Ashley of Missouri Western State College, St. Joseph, Missouri, have also failed to locate this species at any other sites (David Ashley, *in litt.* November 2001). The fact that no additional populations were found in springs in close proximity to Tumbling Creek Cave supports the long-held contention that Tumbling Creek cave is the only location where this species occurs.

Antrobia culveri was historically known from an estimated area of 1,016 square meters (m^2) (10,900 square feet (ft^2) or 0.25 acres) (Greenlee 1974) of Tumbling Creek along approximately 229 meters (m) (750 feet (ft)) of the stream in the approximate middle one-third of the lower stream passage in Tumbling Creek Cave (Greenlee 1974). Based on a survey of approximately 630 m^2 (6,800 ft^2) of suitable habitat within the 457 m (1,500 ft) of human-accessible cave-stream habitat, Greenlee (1974) estimated the population of Tumbling Creek cavesnails at 15,118 individuals.

In 1995, we reviewed the status of the species, including the survey methodology originally established by Greenlee (1974), and determined that an inadequate description of the survey methods made it difficult to determine the number of plots taken. Our lack of knowledge on the number of plots sampled by Greenlee made it difficult to interpret his population estimates and impossible to duplicate his survey methods. Therefore, we concluded that a more rigorous statistical survey design would be necessary to establish population trends for the species. Following meetings with Dr. Pam Haverland of the U.S. Geological Survey, Columbia Environmental Research Center in Columbia, Missouri, and Mr. Tom Aley, President of Ozark Underground Laboratory (OUL) and owner of Tumbling Creek Cave, a sampling protocol was established within an approximate 75 m (247 ft) section of Tumbling Creek that was known to be inhabited by *Antrobia culveri* but that would minimize any potential impacts to the federally endangered gray and Indiana bats.

Following the establishment of sampling stations within Tumbling Creek Cave, and an initial September 1996 survey using those stations (McKenzie, *in litt.* 1996), we contracted Dr. David Ashley, of Missouri Western State College, St. Joseph, Missouri, to monitor population trends of the Tumbling Creek cavesnail. Ashley completed 16 separate monitoring trips between September 3, 1997, and August 31, 2001 (Ashley 2000, 2001a, 2001b, 2001c). Ashley (2000, 2001a, 2001b, 2001c) determined that population estimates of *Antrobia culveri* within the monitoring stations fluctuated both seasonally and annually, and ranged from a high of 1,166 individuals on September 3, 1997, to a low of 0 individuals on January 11, March 17, May 8, July 16, and August 31, 2001. Ashley statistically analyzed the data and concluded that a significant decrease in the numbers of cavesnails had occurred between September 9, 1996, and August 31, 2001 (Ashley 2001c).

Although the 2001 surveys failed to document the presence of any cavesnails within the established monitoring stations, 40 individuals were discovered upstream of the sampling stations in March 2001. During March 16–18, 2001, Ashley and others surveyed the entire human-accessible 457 m (1,500 ft) of Tumbling Creek, including a small tributary that has approximately 9 additional meters (30

ft) of accessible habitat. A total of 39 person-hours was expended in searching a total of 1,054 rocks in the 466 m (1,530 ft) of available habitat. A total of 39 cavesnails were located in a 14-m (45-ft) section of the stream upstream from the monitoring stations, and another cavesnail was found in the tributary (Ashley 2001a). Subsequent surveys in May, July, and August 2001 documented the presence of cavesnails only in this 14-m section upstream of the established sampling stations. The small tributary stream was not searched during those subsequent surveys. A more thorough search was not conducted in either the tributary or the area upstream from the sampling stations in order to minimize disturbance to cavesnails in those areas. Observations between March and August 2001 suggest that the numbers of *Antrobia culveri* have declined drastically from estimates obtained by Greenlee (1974); however, differing sampling methods make it impossible to directly compare Ashley's estimates with those of Greenlee.

In addition to Greenlee's 1974 survey and the standardized surveys conducted between 1996 and 2001, other attempts have been made to monitor the species' status and derive estimates of its abundance. A June 1991 survey conducted by Tom Aley, Paul McKenzie (Service, Columbia, Missouri), and Dennis Figg (MDC, Jefferson City, Missouri) located 42 individuals after a 9 person-hour search (McKenzie, pers. obs.). A June 1993 survey conducted by Monty Holder (a high school biology instructor) of Sedalia, Missouri, and three assistants located 21 individuals during 6 person-hours of search effort (Tom Aley, *in litt.* 1993), but the number of plots sampled is unknown. On August 29, 1995, Paul McKenzie and Cathy Aley searched for the species and attempted to estimate the number of cavesnails discovered per 0.3048 m^2 (1 ft^2) plot. This survey yielded 6 cavesnails in 22 plots or 0.27 cavesnails per plot (McKenzie, unpubl. data). This compares to an estimated 2.16 cavesnails per plot observed by Greenlee (1974) when equivalent plot sizes were calculated for analysis purposes. Although it is impossible to determine the exact number of plots sampled by Greenlee (1974), he did record the average number of snails per plot, and this can be compared to the same variable measured in 1995. A decrease from 2.16 cavesnails per plot to 0.27 cavesnails per plot would represent an approximate 88 percent decrease in the species' density over the 22-year period between 1974 and 1995.

Previous Federal Action

On January 6, 1989, the Service published an Animal Notice of Review (54 FR 54554–54579) which included the Tumbling Creek cavesnail as a category 2 candidate species for possible future listing as threatened or endangered. Category 2 candidates were those taxa for which information contained in the Service's files indicated that listing may be appropriate but for which additional data were needed to support a listing proposal. On November 21, 1991, the Service published an Animal Candidate Notice of Review (56 FR 58804–58836), which elevated the Tumbling Creek cavesnail to category 1 status. Category 1 candidates were those taxa for which the Service had on file sufficient information on biological vulnerability and threats to support preparation of listing proposals. In the subsequent February 28, 1996, Candidate Notice of Review (61 FR 7596–7613), we indicated that the category 2 candidate species list was being discontinued, and that henceforth the term ''candidate species'' would be applied only to those taxa that would have earlier fit the definition of the former category 1 candidate taxa, that is, those species for which we had on hand sufficient information to support a listing proposal. The Tumbling Creek cavesnail has remained a candidate species until now.

In 1996, we initiated a 5-year set of standardized surveys designed to better assess and quantify the decline in the species' population that was apparent from the earlier data. In January 2001, Ashley (pers. comm. January 14, 2001) notified the Service that no cavesnails were observed within the established monitoring stations during the January 11 survey. He further reported that an analysis of 5 years of data collected between September 1996 and March 2001 indicated that population numbers of the species had exhibited an alarming decline (Ashley 2001b). Based on this information, the Service determined that it was necessary to more closely monitor the species by having surveys conducted once every two months.

Recognizing the need for prompt additional conservation actions for the species, on January 30, 2001, Region 3 of the Service recommended changing the listing priority number for the Tumbling Creek cavesnail from 7 to 1 based upon the mid-January monitoring that failed to locate any cavesnails (Service 2001). Region 3 also recommended pursuing an emergency listing of the species and simultaneously publishing a proposal for long-term listing as endangered under the Act as soon as funding became available. On October 30, 2001, we published an updated Candidate Species Notice of Review (66 FR 54808) that formally changed the listing priority number for *Antrobia culveri* from 7 to 1, reflecting our increased concern for the survival of the species.

On August 29, 2001, the U.S. Department of the Interior reached an agreement with several conservation organizations regarding a number of listing actions that had been delayed by court-ordered critical habitat designations and listing actions for other species. That agreement was subsequently approved by the U.S. District Court for the District of Columbia. Under the agreement, the Service and the organizations agreed to significantly extend the existing court-approved deadlines for the actions on the other species, thereby making funds available for a number of listing actions judged to be higher priority by the Service. Those higher priority listing actions include the emergency listing of the Tumbling Creek cavesnail.

Summary of Factors Affecting the Species

After a thorough review and consideration of all information available, the Service has determined that the Tumbling Creek cavesnail warrants classification as an endangered species. We followed procedures found in section 4 of the Act (16 U.S.C. 1533) and regulations (50 CFR part 424) promulgated to implement the listing provisions of the Act. We may determine a species to be endangered or threatened due to one or more of the five factors described in section 4(a)(1) of the Act. These factors and their application to the Tumbling Creek cavesnail (*Antrobia culveri*) are as follows:

A. The Present or Threatened Destruction, Modification, or Curtailment of Its Habitat or Range.

Antrobia culveri has exhibited a drastic decline in numbers since the first estimate was made by Greenlee (1974) (see Status and Distribution, above). Systematic sampling conducted at established stations between 1996 and 2001 revealed that a statistically significant decline in population has occurred over that period (McKenzie *in litt.* 1996; Ashley 2000, 2001a, 2001b, 2001c). Additionally, no cavesnails have been located at established monitoring stations during the last five surveys (Ashley 2001a, 2001b, 2001c).

We have also documented a dramatic reduction in the portion of the cave

stream occupied by the cavesnail. *Antrobia culveri* was historically known from an estimated 229 m (750 ft) of Tumbling Creek (Greenlee 1974). The 229 m of occupied habitat in 1974 constituted 50 percent of the 457 m (1,500 ft) of human-accessible cave-stream habitat that is believed to be suitable for the cavesnail. The entire accessible 457 m (1,500 ft) of Tumbling Creek, including a small tributary that has approximately 9 additional meters (30 ft) of accessible suitable habitat, was surveyed in March 2001. Cavesnails were found solely in one small (14-m) (45-ft) section of the stream and in the small tributary (Ashley 2001a). Observations between March and August 2001 suggest that *Antrobia culveri* is now restricted to 23 m of available stream habitat or approximately 5 percent of the 457 m of accessible suitable habitat. These figures indicate that distribution of this species in Tumbling Creek Cave has decreased by 90 percent.

Species such as the Tumbling Creek cavesnail, which spend part or all of their life cycle in subterranean water systems, are highly vulnerable to changes in the quality and quantity of that water. In turn, the quality and quantity of the subsurface water is highly dependent upon conditions and human activities on the land surface from which water feeds into losing streams and sinkholes that drain into underground karst conduits. Surface water moves into the subsurface system by a number of mechanisms, including sinkholes, percolation through sandy or gravelly soils and stream bottoms, and seepage and flowage into crevices. As water moves from the surface to the subsurface system, it carries the chemicals and particulate matter from the surface. The land surface that feeds water into a particular cave stream is referred to as the ''recharge area'' for that cave stream. Because recharge areas may be large and may consist of all or parts of several surface watersheds, it is critically important to accurately determine the boundaries of the recharge area with reliable hydrogeological methods. Only when the recharge area is accurately delineated can water quality threats be successfully addressed (Aley and Aley 1991).

The recharge area that feeds water into Tumbling Creek Cave has been recently delineated by the cave owner, Mr. Thomas Aley of the OUL, who is also a recognized cave specialist and expert karst hydrogeologist (Aley and Aley 2001). Pending the results of additional recharge delineation studies currently being conducted by Aley on a tract of land recently purchased by him and Cathy Aley (Tom Aley, pers. comm., September 24, 2001), he estimated the recharge area to be approximately 2,349 hectares (5,804 acres or 9.07 square miles). Land ownership based on current data within the recharge area is: (1) Tom and Cathy Aley own approximately 1,550 acres, or 25 percent of the total; (2) employees of Ozark Underground Laboratory and other private individuals who manage their property to protect water quality and benefit the species own approximately 1,268 acres or 22 percent; (3) an estimated 1,300 acres or 23 percent is within Mark Twain National Forest; (4) the U.S. Army Corps of Engineers (CE) owns an estimated 100 acres or 2 percent; and (5) other private landowners whose land use practices and knowledge of the cavesnail are currently unknown to us own approximately 1,636 acres or 28 percent. Thus, within the delineated recharge area for Tumbling Creek Cave, roughly 4,168 acres or approximately 72 percent is either in public or private ownership by entities who can be expected to manage their land to benefit the species. This includes 920 acres recently purchased by Tom and Cathy Aley, or about 22 percent of the total conservation ownership. However, most of this recently purchased land was subject to recent land use practices (e.g., over-grazing and removal of riparian vegetation) that resulted in heavy soil erosion that probably continues to contribute to deteriorating water quality in Tumbling Creek Cave. Remediation and restoration of these lands are planned and will require considerable funds, effort, and time.

The Tumbling Creek cavesnail is likely threatened by habitat degradation through diminished water quality from upstream locations within the unprotected or improperly managed areas within the cave's delineated recharge zone. The dramatic decrease in the population and area occupied by this species is probably attributable to degraded water quality from these sources. In recent years, there has been a noticeable increase in water turbidity in Tumbling Creek; the increased turbidity has probably had an adverse effect on the water quality in the cave's stream (Tom and Cathy Aley, pers. comm., August 30, 2001). Increased silt loads within Tumbling Creek could adversely affect the cavesnail by hampering reproduction and recruitment by suffocating juvenile cavesnails (Ashley 2000). Tom and Cathy Aley have also observed that clay particles within deposited silt have settled between gravel and rocks and cemented them together and to the stream bottom (Tom and Cathy Aley, pers. comm., August 2001). Such cementing decreases habitat available to cavesnails, because they are generally restricted to the undersurface of gravel and rocks. This hypothesis is supported, in part, by the observations of Greenlee (1974), who reported that cavesnails occurred primarily on ''3 inch gravel substrate'' rather than on the larger rocks the species has been seen using during more recent surveys. Interestingly, Ashley's (2000) results revealed that some older individuals use silt-covered substrates. This is different from the observations made by Greenlee (1974) who noted that cavesnails were not observed in areas of the stream where fine silt was deposited. Ashley's observations may be because of a reduction in the amount of silt-free substrates preferred by cavesnails which could force the species to use less favorable habitats. Although silt has been a component of Tumbling Creek since Greenlee's initial survey in 1974, it has apparently increased significantly since that date (Tom and Cathy Aley, pers. comm., August 2001). Additional research is needed to determine the degree of silt deposition within Tumbling Creek and if the deposition of silt into the cave is adversely impacting the species, especially smaller and younger individuals (Ashley 2000).

Potential sources of silt within the cave's recharge area have been identified on the two tracts recently purchased by Tom and Cathy Aley, including an earthen dam that burst, and severely degraded and eroded pastureland due to overgrazing. In the latter case, soil erosion has been exacerbated in the last six years by the removal of nearly all vegetation within the riparian corridors of all semi-permanent and intermittent streams on one of those parcels. Harvey (1980) concluded that ''accelerated erosion and sediment transport'' was a problem within drainage basins that have ''excessive slopes,'' and identified ''timber cutting and land clearing for raising livestock, extending urban sprawl, and highway building'' as potential sources of ''accelerated erosion.'' In addition to these sources, the construction of fire lanes associated with controlled burning on Forest Service property within the recharge area may increase the threat of soil erosion with a resulting decrease in water quality in Tumbling Creek.

Other factors within the recharge area of Tumbling Creek Cave that could contribute to the deterioration of the water quality of Tumbling Creek

include: (1) increase in ammonia and nitrate loads from livestock feedlots that could lead to reductions in dissolved oxygen levels, (2) chemicals used for highway maintenance or from accidental spills, and (3) contaminants from different types of trash or hazardous waste materials deposited into sinkholes, ravines, and depressions. Whether these factors are occurring on the parts of the recharge area that are outside of the current ''conservation ownership'' remains to be determined. Refer to Factor E for a discussion of these potential threats.

B. Overutilization for Commercial, Recreational, Scientific, or Educational Purposes

Because access to Tumbling Creek Cave is controlled by the cave owners, all collection of and research on *Antrobia culveri* is strictly controlled. Consequently, there is no evidence of overutilization of this species for commercial, recreational, scientific, or educational purposes. There is also no evidence that disturbance associated with conducting regular surveys is adversely affecting the species. Rocks that are examined are carefully replaced in the location from which they were removed, any specimens discovered are disturbed as little as possible and kept moist to reduce stress, and only a small percentage of the available habitat is sampled during each survey.

C. Disease or Predation

The direct effect of disease on the Tumbling Creek cavesnail is not known and such risks to the species have not been determined. Because the Tumbling Creek cavesnail is known from a single location, disease must be considered a potential threat to the survival of the species. Certain species of salamanders have been shown to be adversely impacted by the bacterium *Acinetobacter* that flourished due to increasing levels of nitrogen associated with the overstocking of livestock (Worthylake and Hovingh 1989). Similarly, Lefcort *et al.* (1997) and Kiesecker and Blaustein (1997) found that amphibians exposed to high levels of silt are susceptible to infection by different species of water mold of the genus *Saprolegnia. Saprolegnia* spp. are widespread in natural waters and commonly grow on dead organic material (Wise *et al.* 1995). Speer (1995) stated that some species of *Saprolegnia* are parasitic on aquatic invertebrates such as rotifers, nematodes, diatoms, and arthropods. High nitrogen and silt levels from overgrazing or other agricultural or urban runoff may increase the cavesnail's susceptibility to disease and act synergistically with other risk factors (e.g., competition from limpets, discussed below) to jeopardize the survival of the remaining individuals. Whether the Tumbling Creek cavesnail is being adversely affected by bacteria or water molds associated with increased loads of nitrogen or silt into Tumbling Creek is unknown but warrants further investigation.

During the December 6, 1997, survey, a few individuals of an unknown species of limpet (*Ferrissia* sp.) were discovered for the first time on the same substrates used by *Antrobia culveri* within the established monitoring stations (Ashley, pers. comm., September 10, 2001). Limpets were not observed again until the January 11, 2001, survey, after which their numbers began to increase. By the August 31, 2001, survey, limpet numbers had increased explosively, and the presence of many small limpets, as well as larger limpets with visible, developing embryos, indicated that reproduction was taking place (Ashley, pers. comm., September 10, 2001; McKenzie pers. obs.). The reasons why these organisms have appeared and increased in numbers within Tumbling Creek are unknown; it is also unknown whether they compete with the cavesnails for food, breeding substrates, or other necessary resources. Other cave invertebrates (e.g., a troglobitic isopod, *Caecidota antricola.*; a troglobitic amphipod, *Stygobromus* sp.; and a troglophilic amphipod, *Gammarus* sp.) coexist with *Antrobia culveri,* often on the same rocks, but it is unknown if these species compete with the cavesnail in any way. Additional research is needed to determine if local environmental changes have provided a competitive advantage for one or more of these species over the Tumbling Creek cavesnail.

D. The Inadequacy of Existing Regulatory Mechanisms

The primary cause of the decline of the Tumbling Creek cavesnail is unknown but is believed to be associated with factors within the 2,349-hectare (5,804-acre) delineated recharge area that have adversely affected the water quality of Tumbling Creek. Federal, State, and local laws have not been sufficient to prevent past and ongoing impacts to areas within the cave's delineated recharge area. *Antrobia culveri* is listed as critically imperiled globally (G1) by The Nature Conservancy, as well as critically imperiled in the State (S1) on the *Missouri Species of Conservation Concern Checklist* (Missouri Natural Heritage Program 2001). The designation as G1/S1 on this checklist, however, provides no legal authority, but is simply utilized for planning and communication purposes (Missouri Natural Heritage Program 2001). Nonetheless, the species currently receives some protection under the *Wildlife Code of Missouri* (Wildlife Code) (Missouri Department of Conservation 2001) as a ''biological diversity element'' (Missouri Natural Heritage Program 2001). ''Biological diversity elements'' are protected under the following general prohibitions of chapter 4 of the Wildlife Code (3CSR10–4.110): ''(1) No bird, fish, amphibian, reptile, mammal or other form of wildlife, including their homes, dens, nests and eggs in Missouri shall be molested, pursued, taken, hunted, trapped, tagged, marked, enticed, poisoned, killed, transported, stored, served, bought, imported, exported or liberated to the wild in any manner, number, part, parcel or quantity, at any time, except as specifically permitted by these rules and any laws consistent with Article IV, sections 40–46 of the *Constitution of Missouri.* (2) Except as otherwise provided in this Code, wildlife may be taken only by holders of the prescribed permits and in accordance with prescribed methods. (3) No person, corporation, municipality, county, business or other public or private entity shall cause or allow any deleterious substance to be placed, run or drained into any of the waters of this State in quantities sufficient to injure, stupefy or kill fish or other wildlife which may inhabit such waters.''

Under the Section 6 Cooperative Agreement between MDC and the Service, if a species is listed as endangered under the ESA, the Conservation Commission of Missouri shall list the species as State endangered. The protection of all species in Missouri is outlined in Chapter 4 of the Wildlife Code and regulations pertaining to endangered species are listed in section 3CSR10–4.111. Under the Wildlife Code, citizens can possess (but not sell or purchase) up to five individuals of any species without a permit and when not specifically protected elsewhere in the code (3CSR10–9.110). However, when a species is listed as endangered, citizens cannot possess any individuals and can not import, transport, purchase, take or possess without a scientific collecting or special use permit. Although the term ''refuge'' is not defined under the Wildlife Code, there is also a provision that enables MDC's Director to establish refuges not to exceed 1 square mile for

not more than 60 days to provide essential protection to endangered species. Furthermore, the Wildlife Code states that a species' ''home'' is protected. The term ''home'' is not defined in this statute and may provide limited or no protection for the cavesnail's habitat. For instance, the creek where the cavesnail resides and the cave's recharge area would probably not be considered a home and thus receive no protection under the Wildlife Code (Bob White, MDC, Protection Division Chief, pers. comm., October 2, 2001).

The Federal Cave Resources Protection Act of 1988 (18 U.S.C. 4301–4309; 102 Stat. 4546) was passed to ''secure, protect, and preserve significant caves on Federal lands * * *'' and to ''foster increased cooperation and exchange of information between governmental authorities and those who utilize caves located on Federal lands for scientific, educational, or recreational purposes.'' Although this statute and a final rule to implement the Federal Cave Resources Protection Act on Forest Service land (59 FR 31152; June 17, 1994) provides protection for caves located on property owned by the Forest Service, they do not provide protection for caves whose recharge areas are within Forest Service boundaries if the caves themselves are under private lands, as is the case with Tumbling Creek Cave.

The protection afforded *Antrobia culveri* from the above-mentioned statutes is limited, does not provide any protections to its habitat, and includes no provisions to protect areas within the delineated recharge area for Tumbling Creek Cave. Therefore, we conclude the most likely threats to the species cannot be addressed by existing regulatory mechanisms.

E. Other Natural or Manmade Factors Affecting Its Continued Existence

Several other potential factors, including point and non-point pollution, threats from residential and commercial development, and recent changes to the hydrological cycle within the 2,349-hectare (5,804-acre) delineated recharge area supporting Tumbling Creek Cave may have negative effects on the species. It is possible that the recent decline in cavesnail numbers is attributable to some yet to be identified point or non-point source pollution within the cave's recharge area. Because the Tumbling Creek cavesnail occupies a permanent, flowing stream, it will likely come in contact with any deleterious chemical or other material that enters the cave's recharge system. Silt deposition has been identified as a potential problem, especially to younger cohorts of the cavesnail's population, but additional research is needed to determine if other contaminants are potentially involved. (See Factor A above.)

Non-point source pollution may be a problem in a significant portion of the recharge area that feeds Tumbling Creek Cave. Potential sources of pollution include the drainage of barnyard and feedlot wastes and the discharge of treated sewage into sinkholes and losing streambeds within the cave's recharge area. The water quality of Tumbling Creek is also threatened due to accidental spills into sinkholes or losing stream valleys feeding Tumbling Creek Cave from State and county highways passing through the recharge area. Such sources of pollution have been identified as potential problems for ground water in the Springfield-Salem Plateaus of southern Missouri (including the watershed that encompasses Tumbling Creek and its identified recharge zone) (Harvey 1980). The decline in numbers of the Tumbling Creek cavesnail may be due to one or several sources of pollution that have resulted in a deterioration of water quality within the recharge area for Tumbling Creek as outlined in Factor A. In comparing ground-water quality of sites within the Ozark Plateaus (including SW Missouri) with other National Water-Quality Assessment Program (NAWQA) sites, Petersen *et al.* (1998) documented that: (1) nitrate concentrations in parts of the Springfield Plateau aquifer were higher than in most other NAWQA drinking-water aquifers, and (2) volatile organic compounds were detected more frequently in drinking-water aquifers within the Ozark Plateaus than in most other drinking-water aquifers. Tumbling Creek Cave is within the NAWQA study boundaries; consequently, the cavesnail could be threatened from these contaminants. Although no detailed water analyses have yet been performed on Tumbling Creek, an instrumentation package to measure water quality parameters will be installed in Tumbling Creek cave during the fall of 2001.

Aley (pers. comm., Jan. 19, 2001) postulated that the decline in cavesnail numbers may actually be because of too much gray bat guano that could deplete oxygen levels in Tumbling Creek, especially during periods of reduced flows as occurred during 1999–2001. What importance gray bat guano plays in the life history requirements of the Tumbling Creek cavesnail is yet to be tested experimentally. The instrumentation package mentioned above will provide data on dissolved oxygen levels once it is installed.

Tumbling Creek Cave is approximately 25 to 30 miles southeast of Branson, Missouri, which is one of the most rapidly expanding areas in the State due to tourism, outdoor recreation, and entertainment developments. If recent trends continue, it has been projected that the number of visitors attracted to this area would increase from an estimated level of 6 million in 1992 to11 million by the year 2015. The accompanying growth in entertainment- and recreation-related activities will place even greater demands on this area of the State (Mullen and Keith 1992). Tumbling Creek Cave is 2 to 3 miles northwest of Bull Shoals Lake which is also undergoing additional real estate development. Consequently, it is likely that sections of the recharge zone for Tumbling Creek Cave will be adversely affected by real estate development and related construction and land management activities.

Another potential threat to the species results from the close hydrologic association of Tumbling Creek with nearby Bull Shoals Lake. Occasional high water levels in this CE reservoir are believed to cause water to backup into the cave stream, threatening roosting bats and the cavesnail (Aley, pers. comm., July 16, 2000). The CE is considering raising the conservation pool of the reservoir by 10 feet, which will likely increase the frequency and duration of the backup events in Tumbling Creek Cave.

Climatic changes, especially recent periods of drought, may also be a contributing factor to the decline of the cavesnail. The National Oceanic and Atmospheric Administration's (NOAA) Palmer Drought Severity Index provides a widely recognized and accepted standard measurement of moisture conditions (NOAA 2001). The Index varies roughly from -6.0 (extreme drought) to +6.0 (extremely wet), with –0.49 to 0.49 indicating near normal conditions. Since the 1974 survey by Greenlee, there have been 4 periods in Southwest Missouri where the Index was below normal for 6 months or longer and exceeded an Index value of –2.0 (moderate drought) for some part of that period. These events occurred in 2-year cycles: 1980–1981; 1991–1992; 1995–1996; and 1999–2000. The 1980–1981 drought was the most prolonged and severe, with the Index reaching –5.0 (extreme drought). We further analyzed a 6-year period between 1995 and 2000, which is the approximate period that Ashley conducted his cavesnail monitoring. The Index was below normal for 6 months or more for 4 of

these 6 years. The years, number of months the Index was below normal, and the averages for the negative indices are: 1995, 6 months, average Index –1.54; 1996, 7 months, average Index –1.2; 1999, 6 months, average Index –1.29; 2000, 10 months, average Index –1.65. Preliminary data on NOAA's website indicate that below-normal moisture (negative Palmer Index) occurred in this region during the early part of 2001 but precipitation levels are now near normal levels.

According to this climatic data, in 2 recent periods (1995–1996 and 1999–2000) precipitation within the recharge area for Tumbling Creek Cave was below normal for an extended period. The direct or indirect impacts of these droughts on the cavesnail are unknown. Reduced flows in the cave stream, especially when combined with other threats, could hamper essential life history requirements (*e.g.,* reproduction, food availability, water temperature); decrease the flushing of silt, guano, and harmful contaminants from the stream; and create an environment more favorable for competitors (e.g., limpets, isopods, and amphipods).

The small population size and endemism (i.e., restricted to a single site) of *Antrobia culveri* makes it vulnerable to extinction due to genetic drift, inbreeding depression, and random or chance changes to the environment (Smith 1990) that can significantly impact cavesnail habitat. Inbreeding depression can result in death, decreased fertility, smaller body size, loss of vigor, reduced fitness, and various chromosome abnormalities (Smith 1990). Despite any evolutionary adaptations for rarity, habitat loss and degradation increase a species' vulnerability to extinction (Noss and Cooperrider 1994). Numerous authors (*e.g.,* Noss and Cooperrider 1994; Thomas 1994) have indicated that the probability of extinction increases with decreasing habitat availability. Although changes in the environment may cause populations to fluctuate naturally, small and low-density populations are more likely to fluctuate below a minimum viable population (*i.e.,* the minimum or threshold number of individuals needed in a population to persist in a viable state for a given interval; Gilpin and Soule 1986; Shaffer 1981; Shaffer and Samson 1985). Current threats to the habitat of the Tumbling Creek cavesnail may exacerbate potential problems associated with its low population numbers and increase the chances of this species going extinct.

Reason for Emergency Determination

Under section 4(b)(7) of the Act and regulations at 50 CFR 424.20, we may emergency list a species if the threats to the species constitute an emergency posing a significant risk to its well-being. Such an emergency listing expires 240 days following publication in the **Federal Register** unless, during this 240-day period, we list the species following the normal listing procedures. Below, we discuss reasons why emergency listing the Tumbling Creek cavesnail as endangered is necessary. In accordance with the Act, if at any time after we publish this emergency rule, we determine that substantial evidence does not exist to warrant such a rule, we will withdraw it.

In making this determination, we have carefully assessed the best scientific and commercial information available regarding the past, present, and future threats faced by the Tumbling Creek cavesnail. *Antrobia culveri* is restricted to one cave and population monitoring conducted between 1996 and 2001 has indicated that a significant and precipitous decline in the population of the species has occurred. This decline has continued to the point that we are no longer finding any cavesnails in a part of the cave where they had always been found prior to 2001 by using the same monitoring methodology. From the discussion under Factor D of this section, it is clear that currently applicable Federal, State, and local laws, regulations and ordinances, individually and collectively, do not provide adequate protection for the Tumbling Creek cavesnail or its habitat or assure that the species will continue to survive.

We believe that the survival of the Tumbling Creek cavesnail now depends on protecting the delineated recharge area of Tumbling Creek Cave from further degradation and restoring and rehabilitating areas within the recharge area to improve the water quality in Tumbling Creek. The few remaining individuals are vulnerable to extinction from ongoing threats, as well as from random natural or human-caused events unless sufficient habitat is protected, water quality improves, and the current small population greatly increases in size. The recent rapid population decline makes it clear that this cavesnail is on the brink of extinction. By this emergency listing as an endangered species, we believe the additional protections, funding, and recognition that immediately become available to the species will greatly increase the likelihood that it can be saved from extinction and can ultimately be recovered.

Critical Habitat

Critical habitat is defined in section 3, paragraph 5(A), of the Act as: (i) The specific areas within the geographical area occupied by a species, at the time it is listed in accordance with the Act, on which are found those physical or biological features (I) essential to the conservation of the species and (II) that may require special management considerations or protection; and (ii) specific areas outside the geographical area occupied by a species at the time it is listed, upon a determination that such areas are essential for the conservation of the species. ''Conservation'' means the use of all methods and procedures needed to bring the species to the point at which listing under the Act is no longer necessary.

Section 4(a)(3) of the Act and our implementing regulations (50 CFR 424.12) require that, to the maximum extent prudent and determinable, we designate critical habitat at the time the species is determined to be endangered or threatened. However, our budget for listing and critical habitat activities is currently insufficient to allow us to immediately complete all of the listing actions required by the Act. Listing Antrobia culveri without designation of critical habitat will allow us to concentrate our limited resources on other listing actions that must be addressed, while allowing us to invoke the protections needed for the conservation of this species without further delay. This is consistent with section 4(b)(6)(C)(i) of the Act, which states that final listing decisions may be issued without critical habitat designation when it is essential that such determinations be promptly published. If prudent and determinable, we will prepare a proposed critical habitat designation for *A. culveri* in the future at such time as our available resources and priorities allow.

Available Conservation Measures

Conservation measures provided to species listed as endangered or threatened under the Act include recognition, recovery actions, requirements for Federal protection, and prohibitions against certain practices. Recognition through listing results in public awareness and conservation actions by Federal, Tribal, State, and local agencies, private organizations, and individuals. The Act provides for possible land acquisition and cooperation with the State and requires that recovery actions be carried out for

all listed species. The protection required of Federal agencies and the prohibitions against certain activities involving listed species are discussed, in part, below.

Section 7(a) of the Act, as amended, requires Federal agencies to evaluate their actions with respect to any species that is proposed or listed as endangered or threatened, and with respect to its critical habitat, if any is being designated. Regulations implementing this interagency cooperation provision of the Act are codified at 50 CFR Part 402. If a species is listed on an emergency basis, or is listed under a non-emergency listing proposal, section 7(a)(2) requires Federal agencies to ensure that activities they authorize, fund, or carry out are not likely to jeopardize the continued existence of such a species or to destroy or adversely modify its critical habitat. If a Federal agency action may adversely affect a listed species or adversely modify its designated critical habitat, the responsible Federal agency must initiate formal consultation with the Service. Section 7(a)(4) of the Act requires Federal agencies to confer with us on any action that is likely to jeopardize the continued existence of a proposed species or result in destruction or adverse modification of proposed critical habitat. Federal agency actions that may affect the Tumbling Creek cavesnail and may require conference and/or consultation with the Service include, but are not limited to, those within the jurisdiction of the U.S. Forest Service, U.S. Army Corps of Engineers, Natural Resources Conservation Service, Environmental Protection Agency, and Federal Highway Administration.

The Act and its implementing regulations found at 50 CFR 17.21 set forth a series of general prohibitions and exceptions that apply to all endangered wildlife. These prohibitions, in part, make it illegal for any person subject to the jurisdiction of the United States to take (including harass, harm, pursue, hunt, shoot, wound, kill, trap, capture, or collect; or attempt any such conduct), import or export, ship in interstate or foreign commerce in the course of commercial activity, or sell or offer for sale in interstate or foreign commerce any listed species. It also is illegal to possess, sell, deliver, carry, transport, or ship any such wildlife that has been taken illegally. Certain exceptions apply to Service agents and those of State conservation agencies.

Permits may be issued to carry out otherwise prohibited activities involving endangered wildlife under certain circumstances. Regulations governing permits are codified at 50 CFR 17.22 and 17.23. For endangered species, such permits are available for scientific purposes, to enhance the propagation or survival of the species, and for incidental take in connection with otherwise lawful activities.

As published in the **Federal Register** on July 1, 1994 (59 FR 34272), it is the Service's policy to identify to the maximum extent practicable at the time a species is listed those activities that would or would not constitute a violation of section 9 of the Act. The intent of this policy is to increase public awareness of the effect of the listing on proposed and ongoing activities within a species' range.

We believe that, based on the best available information, the following actions are not likely to result in a violation of section 9, provided these actions are carried out in accordance with any existing regulations and permit requirements:

(1) Possession of a Tumbling Creek cavesnail legally acquired prior to the effective date of this rule;

(2) Actions that may affect the Tumbling Creek cavesnail that are authorized, funded, or carried out by a Federal agency, when the action is conducted in accordance with an incidental take statement issued by the Service under section 7 of the Act;

(3) Actions that may affect the Tumbling Creek cavesnail that are not authorized, funded, or carried out by a Federal agency, when the action is conducted in accordance with an incidental take permit issued by the Service under section 10(a)(1)(B) of the Act. Applicants design a Habitat Conservation Plan (HCP) and apply for an incidental take permit. These HCPs are developed for species listed under section 4 of the Act and are designed to minimize and mitigate impacts to the species to the greatest extent practicable; and

(4) Actions that may affect the Tumbling Creek cavesnail that are conducted in accordance with the conditions of a section 10(a)(1)(A) permit for scientific research or to enhance the propagation or survival of the species.

We believe that the following actions could result in a violation of section 9; however, possible violations are not limited to these actions alone:

(1) Unauthorized possession, collecting, trapping, capturing, killing, harassing, sale, delivery, or movement, including interstate and foreign commerce, or harming, or attempting any of these actions, of Tumbling Creek cavesnails without a permit (research activities where cavesnails are collected will require a permit under section 10(a)(1)(A) of the Endangered Species Act);

(2) Discharges or dumping of toxic chemicals, silt, or other pollutants (point source and non-point source pollution) within the recharge area of Tumbling Creek Cave that alters or degrades the water quality of Tumbling Creek to the point that it results in death or injury to individuals of the species or results in degradation of cavesnail occupied habitat; and

(3) Release of exotic species (including, but not limited to, fish and crayfish) into Tumbling Creek that adversely affect the cavesnail.

Questions regarding whether specific activities will constitute a violation of section 9 should be directed to the Field Supervisor of the Columbia, Missouri Field Office (see **ADDRESSES** section).

Requests for copies of the regulations regarding listed species and inquiries regarding prohibitions and permits may be addressed to the U.S. Fish and Wildlife Service, Endangered Species Permits, Bishop Whipple Federal Building, 1 Federal Dr., Fort Snelling, MN 55111–4056 (612/713–5343, facsimile 612/713–5292).

National Environmental Policy Act

The Service has determined that an Environmental Assessment, as defined under the authority of the National Environmental Policy Act of 1969, need not be prepared in connection with regulations adopted pursuant to section 4(a) of the Act, as amended. The Service published a notice outlining our reasons for this determination in the **Federal Register** on October 25, 1983 (48 FR 49244).

Paperwork Reduction Act

This rule does not contain any collections of information that require additional Office of Management and Budget (OMB) approval under the Paperwork Reduction Act, 44 U.S.C. 3501 *et seq.* An information collection related to the rule pertaining to permits for endangered and threatened species has OMB approval and is assigned clearance number 1018–0094. This rule does not alter that information collection requirement. An agency may not conduct or sponsor, and a person is not required to respond to, a collection of information unless it displays a currently valid control number. For additional information concerning permits and associated requirements for endangered wildlife, see 50 CFR 17.21 and 17.22.

References Cited

A complete list of all references cited in this rulemaking is available upon

request from the Field Supervisor, Columbia, Missouri Field Office (see **ADDRESSES** section).

Author

The primary author of this proposed rule is Paul M. McKenzie, Ph.D., U.S. Fish and Wildlife Service, Columbia, Missouri Field Office (see **ADDRESSES** section).

List of Subjects in 50 CFR Part 17

Endangered and threatened species, Exports, Imports, Reporting and recordkeeping requirements, Transportation.

Regulation Promulgation

For the reasons given in the preamble, we amend part 17, subchapter B of chapter I, title 50 of the Code of Federal Regulations, as set forth below:

PART 17—[AMENDED]

1. The authority citation for part 17 continues to read as follows:

Authority: 16 U.S.C. 1361–1407; 16 U.S.C. 1531–1544; 16 U.S.C. 4201–4245; Pub. L. 99–625, 100 Stat. 3500, unless otherwise noted.

2. Amend § 17.11(h) by adding the following, in alphabetical order under SNAILS, to the List of Endangered and Threatened Wildlife:

§ 17.11 Endangered and threatened wildlife.

* * * * *

(h) * * *

Species		Historic range	Vertebrate population where endangered or threatened	Status	When listed	Critical habitat	Special rules
Common name	Scientific name						
*	*	*	*	*	*	*	
SNAILS							
*	*	*	*	*	*	*	
Cavesnail, Tumbling Creek	*Antrobia culveri*	U.S.A. (MO).	NA	E	719	NA	NA

* * * * *

Dated: December 10, 2001.

Marshall P. Jones, Jr.,

Acting Director, Fish and Wildlife Service.

[FR Doc. 01–31305 Filed 12–26–01; 8:45 am]

BILLING CODE 4310–55–P

DEPARTMENT OF COMMERCE

National Oceanic and Atmospheric Administration

50 CFR Part 660

[Docket No. 011218302–1302–01; 120601A]

RIN: 0648–AP00

Fisheries off West Coast States and in the Western Pacific; Coastal Pelagic Species Fisheries; Annual Specifications

AGENCY: National Marine Fisheries Service (NMFS), National Oceanic and Atmospheric Administration (NOAA), Commerce.

ACTION: Final harvest guideline.

SUMMARY: NMFS announces the annual harvest guideline for Pacific sardine in the exclusive economic zone off the Pacific coast for the fishing season January 1, 2002, through December 31, 2002. This harvest guideline has been calculated according to the regulations implementing the Coastal Pelagic Species Fishery Management Plan (FMP), and establishes allowable harvest levels for Pacific sardine off the Pacific coast.

DATES: Effective January 1, 2002, through December 31, 2002.

ADDRESSES: The report *Stock Assessment of Pacific Sardine with Management Recommendations for 2002* is available from Rodney R. McInnis, Acting Administrator, Southwest Region, (Regional Administrator), NMFS, 501 West Ocean Blvd., Suite 4200, Long Beach, CA 90802–4213.

FOR FURTHER INFORMATION CONTACT: James J. Morgan, Southwest Region, NMFS, 562–980–4036.

SUPPLEMENTARY INFORMATION: The FMP divides managed species into two categories: actively managed and monitored. Harvest guidelines for actively managed species (Pacific sardine and Pacific mackerel) are based on formulas applied to current biomass estimates. Harvest guidelines for monitored species (jack mackerel, northern anchovy, and market squid), which are underutilized or under the jurisdiction of the State of California, are not based on current biomass estimates, although a constant allowable biological catch (ABC) for each species is based on the long-term yield of each species. If an ABC for a monitored species is reached, it would be designated an actively managed species; at that time, the Pacific Fishery Management Council (Council)would review the condition of the resource and recommend management action.

At a public meeting each year, the biomass for each actively managed species is presented at a public meeting held by the Council's Coastal Pelagic Species Management Team (Team). At that time, the biomass, the harvest guideline, and the status of the fishery is reviewed. Following review and recommendations by the Council, and after hearing all public comments, NMFS publishes the annual harvest guideline in the Federal Register before the beginning of the fishing season.

On October 10, 2001, in accordance with the procedures of the FMP, the biomass report and harvest guideline for Pacific sardine were reviewed at a public meeting of the Team at the offices of the California Department of Fish and Game in Los Alamitos, California. A public meeting between the Team and the Council's Coastal Pelagic Species Advisory Subpanel was held in the same location that afternoon. The Council reviewed the report at its meeting on November 1, 2001, and heard comments from its advisory bodies and the public. No significant comments on the biomass estimate were received; therefore, the Council recommended to NMFS that the biomass and harvest guideline be published as presented.

The sardine population was estimated using a modified version of the integrated stock assessment model called Catch at Age Analysis of Sardine–Two Area Model (CANSAR–TAM). CANSAR–TAM is a forward-casting,

age-structured analysis using fishery dependent and fishery independent data to obtain annual estimates of sardine abundance, year-class strength, and age-specific fishing mortality for 1983 through 2001. The modification of CANSAR-TAM was developed to account for the expansion of the Pacific sardine stock northward to include waters off the northwest Pacific coast. Documentation of the 2002 estimate is described in *Stock Assessment of Pacific Sardine with Management Recommendations for 2002* (see **ADDRESSES**).

The formula in the FMP uses the following factors to determine the harvest guideline:

1. The biomass of age one sardine and above. For 2002, this estimate is 1,057,599 metric tons (mt).
2. The cutoff. This is the biomass level below which no commercial fishery is allowed. The FMP established this level at 150,000 mt.
3. The portion of the sardine biomass that is in U.S. waters. For 2002, this estimate is 87 percent, based on the average of larval distribution obtained from scientific cruises and the distribution of the resource obtained from logbooks of fish-spotters.
4. The harvest fraction. This is the percentage of the biomass above 150,000 mt that may be harvested. The fraction used varies (5–15 percent) with current ocean temperatures. A higher fraction is used for warmer ocean temperatures, which favor the production of Pacific sardine, and a lower fraction is used for cooler temperatures. For 2002, the fraction was 15 percent based on three seasons of sea surface temperature at Scripps Pier, California.

Based on the estimated biomass of 1,057,599 mt and the formula in the FMP, a harvest guideline of 118,442 mt was calculated for the fishery beginning January 1, 2002. The harvest guideline is allocated one-third for Subarea A, which is north of 35° 40′ N. lat. (Pt. Piedras Blancas, CA) to the Canadian border, and two-thirds for Subarea B, which is south of 35° 40′ N. lat. to the Mexican border. Any unused resource in either area will be reallocated between areas to help ensure that the optimum yield will be achieved. The northern allocation is 39,481 mt; the southern allocation is 78,961 mt.

Classification

This action is authorized by 50 CFR 660.509 and is exempt from review under Executive Order 12866.

The Assistant Administrator for Fisheries, NOAA (AA) finds for good cause under 5 U.S.C. 553 (b)(B) that providing prior notice and an opportunity for public comment on this action is unnecessary because establishing the annual harvest guideline is primarily a ministerial act, determined by applying formulas in the FMP. During the comment periods for Amendment 8 to the CPS FMP and its proposed rule, the public was given an opportunity to comment on these formulas. Some of the variables used in the formula (biomass estimate, proportion of biomass in U.S. waters, harvest fraction determination) are developed with input from the Council and its advisory committees. Final input on these items was provided in November, which did not allow sufficient time to publish a proposed rule in the **Federal Register**. Since the harvest guideline should be in place before the fishing year begins on January 1, 2002, it would be impracticable and contrary to the public interest to delay this process further.

Because this final rule merely announces the result of harvest guideline calculations and does not require any participants in the fishery to take action or to come into compliance, the AA finds for good cause under 5 U.S.C. 553 (d)(3) that delaying the effective date of this final rule for 30 days is unnecessary.

Because prior notice and opportunity for public comment are not required for this action by 5 U.S.C. 553, or any other law, the analytical requirements of the Regulatory Flexibility Act, 5 U.S.C. 601 *et seq.*, are not applicable.

Authority: 16 U.S.C. 1801 *et seq.*

Dated: December 19, 2001.

William T. Hogarth,

Assistant Administrator for Fisheries, National Marine Fisheries Service.

[FR Doc. 01–31835 Filed 12–26–01; 8:45 am]

BILLING CODE 3510–22–S

Proposed Rules

Federal Register
Vol. 66, No. 248
Thursday, December 27, 2001

This section of the FEDERAL REGISTER contains notices to the public of the proposed issuance of rules and regulations. The purpose of these notices is to give interested persons an opportunity to participate in the rule making prior to the adoption of the final rules.

FEDERAL ELECTION COMMISSION

11 CFR Part 106

[Notice 2001–20]

Notice of Disposition Regarding Party Committee Transfers of NonFederal Funds for Payment of Allocable Expenses

AGENCY: Federal Election Commission.

ACTION: Notice of disposition.

SUMMARY: The Commission will not issue a statement of enforcement policy regarding party committee transfers of nonfederal funds for payment of allocable expenses. On November 7, 2001, the Commission requested comments on a Draft Statement of Policy. The Draft Statement indicated that in light of the suspension of fundraising activities by some party committees after the terrorist attacks of September 11, 2001, the Commission would consider exercising its prosecutorial discretion by not pursuing *prima facie* violations of the 60 day limit for party committee transfers of nonfederal funds to pay for the nonfederal share of allocable expenses. After receiving and considering public comments, the Commission declined to adopt a final Statement of Policy by a 3–3 vote.

DATES: November 29, 2001.

FOR FURTHER INFORMATION CONTACT: Rosemary C. Smith, Assistant General Counsel, or Richard Ewell, Staff Attorney, 999 E Street, NW, Washington, DC 20463, (202) 694–1650 or (800) 424–9530.

SUPPLEMENTARY INFORMATION: The Commission's regulations at 11 CFR 106.1 and 106.5 allow party committees to defray the costs of activities that relate to both federal and nonfederal elections by allocating the costs between their federal and nonfederal accounts, so long as they pay an amount equal to or greater than the federal portion of these expenses with funds that are permissible under the Federal Election Campaign Act, 2 U.S.C. § 431 *et seq.* [''FECA'' or ''the Act'']. The Commission's regulations provide that party committees, after paying an allocable expense, have a 60 day ''window'' to transfer funds from a nonfederal account to cover the nonfederal portion of the allocable expense. *See* 11 CFR 106.5(g)(1)(i) and (ii); 11 CFR 106.5(g)(2)(ii)(B).

In many instances, party committees plan and execute allocable activities based, in part, on the expectation that they will subsequently receive nonfederal funds that can be transferred to their federal or allocation accounts before the expiration of the 60-day transfer window in section 106.5(g)(2)(ii)(B). In light of the fact that some party committees temporarily suspended their fundraising activities in the immediate aftermath of the September 11, 2001 terrorist attacks, these party committees may not have sufficient funds in their nonfederal accounts to make transfers to their federal accounts or allocation accounts within the required 60 day transfer window.

Consequently, the Commission sought and received public comment on a draft proposal to exercise its prosecutorial discretion by not pursuing *prima facie* violations of the 60 day time limit for a specified period of time. *See* 66 *FR* 56247 (Nov. 7, 2001). On November 29, 2001, the Commission declined to adopt a final statement of policy by a vote of 3–3. *See* Agenda Document Number 01–61. Because the motion did not receive an affirmative vote of four members of the Commission, the Commission is announcing that no further action on the proposed statement of policy will be taken at this time. *See* 2 U.S.C. 437c(c).

Dated: December 18, 2001.

David M. Mason,

Vice Chairman, Federal Election Commission.

[FR Doc. 01–31616 Filed 12–26–01; 8:45 am]

BILLING CODE 6715–01–P

FEDERAL HOUSING FINANCE BOARD

12 CFR Part 951

[No. 2001–30]

RIN 3069–AB14

Affordable Housing Program Amendments

AGENCY: Federal Housing Finance Board.

ACTION: Proposed rule.

SUMMARY: The Federal Housing Finance Board (Finance Board) is proposing to amend its regulation governing the operation of the Affordable Housing Program (AHP) to improve the operation and effectiveness of the AHP. The proposed changes include: making the requirements for approval of post-completion project modifications the same as the current requirements for pre-completion project modifications; allowing the Federal Home Loan Banks (Banks) to define ''homeless household'' for purposes of scoring applications for AHP subsidy to finance housing for such households; allowing the Banks to award scoring points to projects using Federal government properties, regardless of the price at which they are conveyed, and for projects using non-government properties conveyed for an amount significantly below their fair market value; permitting the Banks to allow project sponsors or members to re-use recaptured direct subsidies or unused interest-rate subsidies from prepaid mortgage loans to assist another AHP-eligible household to purchase an owner-occupied unit; permitting a Bank to allocate up to the greater of $3 million or 25 percent of its annual required AHP contribution for the subsequent year to the current year's AHP competitive application program; including the Federal Financial Institutions Examination Council as a source of area median income data that may be used to determine household income eligibility; removing the requirement that the amount of AHP subsidies offered by a Bank in each funding period must be comparable; removing the requirement that the Banks must determine the feasibility of projects before their applications may be scored; and allowing the Banks additional time after completion of a rental project to review the

documentation received from the project owner for project compliance.

DATES: The Finance Board will accept written comments on the proposed rule that are received on or before February 25, 2002.

ADDRESSES: Send written comments to: Elaine L. Baker, Secretary to the Board, at the Federal Housing Finance Board, 1777 F Street, NW., Washington, DC 20006, or to *BakerE@fhfb.gov*. Comments will be available for inspection at this address.

FOR FURTHER INFORMATION CONTACT: Charles E. McLean, Deputy Director, (202) 408–2537, Melissa L. Allen, Program Analyst, (202) 408–2524, Office of Policy, Research and Analysis; or Sharon B. Like, Senior Attorney-Advisor, (202) 408–2930, Office of General Counsel, Federal Housing Finance Board, 1777 F Street, NW., Washington, DC 20006.

SUPPLEMENTARY INFORMATION:

I. Statutory and Regulatory Background

Section 10(j)(1) of the Federal Home Loan Bank Act (Bank Act) requires each Bank to establish a program to subsidize the interest rate on advances to members of the Bank System engaged in lending for long-term, low- and moderate-income, owner-occupied and affordable rental housing at subsidized interest rates. *See* 12 U.S.C. 1430(j)(1). The Finance Board is required to promulgate regulations governing the AHP. *See* 12 U.S.C. 1430(j)(1), (9). The Finance Board's existing regulation governing the operation of the AHP, which made comprehensive revisions to the AHP, was adopted in August 1997 and became effective January 1, 1998. *See* 62 FR 41812 (Aug. 4, 1997) (*codified* at 12 CFR part 951).

Various amendments have been made to the AHP regulation since 1998 in order to clarify AHP requirements and improve the operation and effectiveness of the AHP. The Banks, project sponsors and Finance Board staff have, over the course of implementation of the AHP, identified additional amendments that it is believed would improve the operation and effectiveness of the AHP. The proposed amendments are discussed further below. The Finance Board welcomes written comments on all aspects of the proposed rule.

II. Analysis of Proposed Rule

A. Definitions—Section 951.1

1. Removal of Definition of ''Homeless Household''

For the reasons discussed in section F. below, the proposed rule would remove the definition of ''homeless household'' in § 951.1 of the AHP regulation, and allow each Bank to define the term for purposes of scoring applications for AHP subsidy to finance housing for homeless households under § 951.6(b)(4)(iv)(D).

2. Inclusion of FFIEC in Definition of ''Median Income for the Area''

Under the AHP regulation, households are eligible for AHP subsidies if they have an income at or below the targeted income level, expressed as a percentage of median income for the area, specified in the AHP application. *See* 12 CFR 951.6(b)(4)(iv)(C). Section 951.1 of the AHP regulation defines ''median income for the area'' generally as one or more of the following, as determined by the Bank: (1) The median income for the area, as published annually by the Department of Housing and Urban Development (HUD); (2) the applicable median family income, as determined under 26 U.S.C. 143(f) and published by a state mortgage revenue bond program; (3) the median income for the area, as published by the U.S. Department of Agriculture; or (4) the median income for any definable geographic area, as published by a Federal, state or local government entity for purposes of that entity's housing programs, and approved by the Finance Board, at the request of a Bank, for use under the AHP. *See* 12 CFR 951.1.

The Federal Financial Institutions Examination Council (FFIEC) is a Federal government source that publishes updated median income data for areas, based on existing HUD median income data. Since the FFIEC median income data is derived from existing HUD data, which is a permissible source of area median income data for determining the income eligibility of households under the AHP regulation, the Finance Board believes that the Banks should also be able to use such FFIEC data for determining household income eligibility. This proposed change would be consistent with the Finance Board's recent amendment to the definition of ''median income for the area'' in its Community Investment Cash Advance (CICA) Programs Regulation to include FFIEC as a source of median income data that may be used to determine income eligibility for projects and households funded under CICA programs. *See* 66 FR 50293 (Oct. 3, 2001) (*codified at* 12 CFR 952.3).

Accordingly, the proposed rule would add new paragraphs (1)(ii) and (2)(ii) to the existing definition of ''median income for the area'' in § 951.1 to include FFIEC as a data source, and would renumber the remaining paragraphs accordingly.

B. Permitting Banks To Allocate AHP Funds From the Subsequent Year's Required Annual AHP Contribution to the Current Year's Competitive Application Program—Section 951.3(a)(2)

The AHP regulation provides that in cases where the amount of AHP homeownership set-aside funds applied for by members in a given year exceeds the amount available for that year, a Bank may allocate up to the greater of $3 million or 25 percent of its annual required AHP contribution for the subsequent year to the current year's homeownership set-aside programs. *See* 12 CFR 951.3(a)(1). The AHP regulation does not allow the Banks to make a similar allocation of AHP funds from the subsequent year's required annual AHP contribution to the current year's AHP competitive application program. *See* 12 CFR 951.3(a)(2).[1]

A number of Banks have indicated that there may be special circumstances in which it would be beneficial to have the flexibility to allocate a portion of the subsequent year's required AHP contribution to fund additional applications in the current year under the competitive application program. Such special circumstances could include natural or man-made disasters or other emergencies, or sudden changes in market conditions or demand caused by significant economic changes, that increase the need for affordable housing in the current year. Another circumstance might be a demand for additional AHP funds for use in conjunction with a special allocation of housing funds made by a Federal, state or local government agency in the current year.

Several Banks also have raised the issue that a change in national accounting standards, contained in Federal Accounting Standard (FAS) 133, could affect the timing of when a Bank recognizes some of its net earnings and thereby cause fluctuations in the Bank's required AHP contributions from year to year. Allowing the Banks to allocate AHP funds from the subsequent year's required AHP contribution to the current year under the competitive application program would give the Banks flexibility to mitigate some of these year-to-year fluctuations in

[1] Each Bank is required generally to contribute annually to its AHP 10 percent of its net earnings for the previous year. If the aggregate amount of such annual payments by all of the Banks is not at least $100 million, each Bank must contribute to its AHP its pro rata share of $100 million. *See* 12 U.S.C. 1430(j)(5).

required AHP contributions when the Bank's required AHP contribution under-represents the Bank's actual earnings because of accounting rules. The proposal also would give the Banks flexibility to mitigate the effects on the amount of the Bank's required AHP contribution in a year in which the Bank's actual earnings are otherwise lower than expected or desired.

The Finance Board believes that this proposal could be beneficial to the AHP. The Finance Board recognizes that allowing the allocation of AHP funds from the subsequent year's required AHP contribution to the current year may result in less AHP funds available for the subsequent year. However, the overall amount of AHP funds available would not decrease; a portion of the funds would simply be available in the current year rather than in the subsequent year. Moreover, there is no guarantee in any case that the amount of AHP funds available in a given year will be the same as the amount available in the previous year, given fluctuations in Bank net earnings from year to year.

Accordingly, the proposed rule would amend § 951.2(a)(2) to provide that a Bank, in its discretion, may allocate up to the greater of $3 million or 25 percent of its annual required AHP contribution for the subsequent year to the current year's competitive application program. The limit of $3 million or 25 percent is the same as the annual limit applicable to the homeownership set-aside programs. *See* 12 CFR 951.3(a)(1). As with the homeownership set-aside programs, the proposed rule would include a Consumer Price Index (CPI) adjustment provision for the maximum dollar limit under the competitive application program.

C. Removal of Requirement That Banks Offer Comparable Amounts of Subsidies in Each Funding Period— Section 951.6(b)(1)

The AHP regulation provides that the amount of AHP subsidies offered by a Bank in each funding period under the competitive application program shall be comparable. See 12 CFR 951.6(b)(1). A number of Banks have suggested that this requirement be removed, in order to give the Banks flexibility to offer different amounts of AHP funds in each funding period to coincide with the funding cycles of other key funding sources in the Bank's district, or with different demands based on market or housing construction cycles. The Finance Board agrees that it would be beneficial for the Banks to have greater flexibility to manage their AHP funding in this way.

Accordingly, the proposed rule would remove the requirement in § 951.6(b)(1) that the amount of AHP subsidies offered in each Bank's funding period must be comparable.

D. Removal of Requirement That Banks Determine Compliance of AHP Applications With Eligibility Requirements Before Scoring Applications—Section 951.6(b)(4)(i)

The AHP regulation provides that projects receiving AHP subsidies pursuant to a Bank's competitive application program must meet the eligibility requirements of the regulation. *See* 12 CFR 951.5(b). The AHP regulation further provides that a Bank shall score only those applications meeting the eligibility requirements of § 951.5(b). *See* 12 CFR 951.6(b)(4)(i). This means that a Bank must first determine whether each application received satisfies all of the regulatory eligibility requirements, including an assessment of each project's financial feasibility, before the Bank may score the application.

Some Banks maintain that, given the high volume of applications received, it is burdensome and time consuming to have to determine the eligibility, and in particular, the financial feasibility, of each application before the application may be scored, especially when many of the applications determined to be eligible end up scoring too low to be awarded AHP funds. These Banks suggest that it would be more efficient to be able to score the applications first, and then determine their eligibility starting with the highest scoring applications and continuing on down the list, until all of the AHP subsidy is committed. The Finance Board agrees that the Banks should have the discretion to determine which approach works best for that Bank. Section 951.5(b) would still require that AHP subsidy may only be awarded to projects meeting the regulatory eligibility requirements, including financial feasibility. *See* 12 CFR 951.5(b).

Accordingly, the proposed rule would amend § 951.6(b)(4)(i) by removing the requirement that the Bank score only those applications meeting the regulatory eligibility requirements.

E. Permitting Banks to Award Scoring Points for Projects Using Properties Conveyed by the Federal Government Regardless of the Amount Charged for Conveyance, and for Projects Using Properties Conveyed by Non-Government Entities for an Amount Substantially Below Their Fair Market Value—Section 951.6(b)(4)(iv)(A)

The AHP regulation includes, as one of nine criteria for scoring AHP applications, the creation of housing using a significant proportion of units or land donated or conveyed for a ''nominal'' price by the Federal government or any agency or instrumentality thereof, or by any other party. *See* 12 CFR 951.6(b)(4)(iv)(A). A ''nominal'' price is defined in the regulation as a small, negligible amount, most often one dollar, and may be accompanied by modest expenses related to the conveyance of the property for use by the project. *See* 12 CFR 951.6(b)(4)(iv)(A). Scoring points, therefore, may not be awarded to projects using Federal government or non-government properties that were conveyed for more than a ''nominal'' price.

In a number of markets throughout the country, there are substantial quantities of foreclosed housing units owned by HUD and other Federal government agencies. Allowing the Banks to award scoring points for projects using units conveyed by the Federal government, regardless of the amounts charged for their conveyance, would be consistent with the Bank Act provisions encouraging the use of AHP funds in projects involving housing owned or held by the Federal government, and coordination of the AHP with other Federal or federally-subsidized affordable housing activities to the maximum extent possible. *See* 12 U.S.C. 1430(j)(3)(B), (j)(9)(G).

Accordingly, the proposed rule would amend § 951.6(b)(4)(iv)(A) to provide that a Bank may award scoring points to projects using a significant proportion of housing units conveyed by the Federal government or any agency or instrumentality thereof, regardless of the amount charged for such conveyance. The proposed rule would retain the current provision allowing the Banks to award scoring points for projects using land donated by the Federal government.

In addition, some Banks maintain that the definition of ''nominal'' in the regulation may be too restrictive in not recognizing the variety of ways in which properties are being conveyed by non-government entities to affordable housing project sponsors under different

local market conditions in each Bank district. For example, properties may be conveyed to project sponsors for a price of one dollar, for a price that is more than one dollar but significantly below the property's fair market value, or for payment of liens on the property such as back taxes, or the administrative costs of transferring the property, which may be more than one dollar but significantly below the property's fair market value. The Banks suggest that the regulation should explicitly allow scoring points to be awarded for properties conveyed from non-government entities under these circumstances, where the amounts paid for the properties are significantly below their fair market value. The Finance Board agrees that this proposal could be beneficial to the AHP, and that the Banks should have the discretion to define what is an amount significantly below the fair market value of the property, since these amounts may vary depending on local market conditions in each Bank district.

Accordingly, the proposed rule would amend § 951.6(b)(4)(iv)(A) by removing the ''nominal price'' requirement and adding language clarifying that a Bank may award scoring points for properties conveyed by a non-government entity at an amount that is significantly below their fair market value, as defined by the Bank in its AHP implementation plan. The proposed rule would retain the current provision allowing the Banks to award scoring points for projects using land donated by non-government entities.

F. Removal of Definition of ''Homeless Household'' for Purposes of the Homeless Households Scoring Criterion—Section 951.6(b)(4)(iv)(D)

The AHP regulation also includes as a scoring criterion the creation of housing for homeless households, as further described in the regulation. *See* 12 CFR 951.6(b)(4)(iv)(D). The term ''homeless household'' is defined in the regulation as a household made up of one or more individuals, other than individuals imprisoned or otherwise detained pursuant to state or federal law, who:

(1) Lack a fixed, regular and adequate nighttime residence; or

(2) Have a primary nighttime residence that is:

(i) A supervised publicly or privately operated shelter designed to provide temporary living accommodations (including welfare hotels, congregate shelters, and transitional housing for the mentally ill);

(ii) An institution that provides a temporary residence for individuals intended to be institutionalized; or

(iii) A public or private place not designed for, or ordinarily used as, a regular sleeping accommodation for human beings.

See 12 CFR 951.1.

A number of Banks have maintained that this definition of ''homeless household'' should include persons in certain additional situations who may be viewed as homeless, or at imminent risk of homelessness. For example, although the current definition covers victims of domestic violence living in organized shelters, it does not cover victims of domestic violence in rural areas where there are no organized shelters and the victims may have no alternative but to live in the homes of their abusers. Nor does the definition cover persons living in shared overcrowded housing in extremely cold climates where there is a shortage of organized shelters and it is impossible to survive living on the streets or in cars. Other situations may include children living in foster care who are about to reach the age of 18 and must leave the foster care system, and households facing imminent loss of their homes due to condemnation or eviction. The Finance Board agrees that the Banks should be able to award scoring points for projects serving these additional types of households. The Finance Board believes that the Banks should have the discretion to define what is a ''homeless household,'' since the types of homeless households may vary depending on local conditions in each Bank district. Allowing the Banks to define what is a ''homeless household'' would be consistent with the discretionary authority the Banks already have under the scoring criteria in the AHP regulation to define and provide preferences for other targeted groups, such as special needs households or first-time homebuyers. *See* 12 CFR 951.6(b)(4)(iv)(F) (*1*), (*3*).

Accordingly, the proposed rule would remove the definition of ''homeless household'' in § 951.1 and amend § 951.6(b)(4)(iv)(D) to provide that, for purposes of scoring applications that reserve units for ''homeless households,'' a ''homeless household'' shall have the meaning as defined by the Bank in its AHP implementation plan.

G. Making The Requirements for Post-Completion Modifications The Same as the Current Requirements for Pre-Completion Modifications —Sections 951.7, 951.9

The AHP regulation sets forth different requirements that must be satisfied in order for a Bank to approve, in its discretion, a modification to the terms of a project's application, depending on whether the modification would be made prior to or after the project's completion. The regulation provides that a Bank, in its discretion, may approve a modification request, including requests for additional AHP subsidy, made prior to project completion, provided that:

(1) The project, incorporating any such changes, would meet the regulatory eligibility requirements;

(2) The application, as reflective of such changes, continues to score high enough to have been approved in the funding period in which it was originally scored and approved by the Bank; and

(3) There is good cause for the modification.

See 12 CFR 951.7.

A Bank, in its discretion, may approve modification requests, not including requests for additional AHP subsidy, made after project completion, provided that:

(1) The project, incorporating any material changes, would meet the regulatory eligibility requirements;

(2) the application, as reflective of such changes, continues to score high enough to have been approved in the funding period in which it was originally scored and approved by the Bank;

(3) the project is in financial distress, or is at substantial risk of falling into such distress (financial distress requirement); and

(4) the project sponsor or owner has made best efforts to avoid noncompliance with the terms of the application for subsidy and the requirements of the regulation.

See 12 CFR 951.9.

Because a Bank may not approve additional AHP subsidy for a post-completion modification of a project, projects seeking additional subsidy have to submit a new application for subsidy in a regular competitive application funding period and score highly enough to be approved in that funding period. Projects may be unable to score successfully in the new funding period because the scoring criteria and priorities in the new funding period may not be the same as those applicable in the funding period when the projects

were originally approved. Some Banks have argued that they should be able to approve modifications of completed projects for good cause even when the project is not faced with financial distress. A number of Banks also have indicated that the inability to provide additional subsidy to completed but troubled projects makes it difficult or impossible for the Banks to participate with other funding sources in workout arrangements to help such projects retain their affordable units or forestall financial distress. The projects may then fail to comply with their AHP regulatory requirements or application commitments, subjecting them to possible recapture of the AHP subsidy. *See* 12 CFR 951.12. The Finance Board believes that it would be beneficial for such projects if the Banks had more flexibility to participate in such workouts. Therefore, the proposed rule would allow the Banks, in their discretion, to approve increases in subsidy, would remove the financial distress requirement, and would otherwise make the post-completion modification requirements the same as those currently applicable to pre-completion modifications. The Finance Board will be requesting information from the Banks on how this new authority is being implemented.

A number of Banks and project sponsors also have suggested that the Finance Board consider removing the requirement in § 951.7(a)(2) that a project, as proposed to be modified, must continue to score high enough to have been approved in the funding period in which it was originally scored and approved by the Bank, in order to be approved for a modification. In some cases, the project may need to be modified because of changed market conditions, but the project, as modified, would not continue to score high enough to have been approved in its original funding period. Banks and project sponsors have argued that market conditions may change dramatically over many years, and that it is impractical to hold a project to the same scoring criteria that existed years earlier. While the Finance Board recognizes the points raised by this argument, the Finance Board remains concerned about the potential that modifications offer for an applicant to manipulate the scoring system by making overly optimistic commitments that it knows it cannot reasonably meet, in its AHP application, in order to score successfully, with the anticipation of getting a modification after approval to reduce those commitments. Moreover, the Finance Board has a waiver process that would enable the Finance Board, upon a showing of good cause, to waive the re-scoring requirement for a modification, on a case-by-case basis. *See* 12 CFR 907.2. The proposed rule, therefore, would retain the current re-scoring requirement in § 951.7(a)(2).

In short, the proposed rule would remove § 951.9, and make the requirements of § 951.7 applicable to post-completion, as well as pre-completion, modification requests.

H. Providing the Banks With an Additional 120 Days to Conduct the Initial Monitoring of Completed Rental Projects—Section 951.10(c)(2)

The AHP regulation provides that within the first year after completion of a rental project, the project owner must:

(i) certify to the Bank that the services and activities committed to in the AHP application have been provided in connection with the project; and

(ii) provide a list of actual tenant rents and incomes to the Bank, and certify that the tenant rents and incomes are accurate and in compliance with the rent and income targeting commitments made in the AHP application, and that the project is habitable.

See 12 CFR 951.10(a)(2)(ii).

The regulation further provides that each Bank must take the steps necessary to determine that:

(i) within the first year after completion of a rental project, the services and activities committed to in the AHP application have been provided in connection with the project; and

(ii) the AHP subsidies were used for eligible purposes, the project's actual costs were reasonable and customary in accordance with the Bank's project feasibility guidelines, and the subsidies were necessary for the financial feasibility of the project, as currently structured.

See 12 CFR 951.10(c)(2).

A number of Banks have indicated that if a project owner does not provide its certifications and other documentation to the Bank until late in the first year after project completion, the Bank may not be able to complete its reviews of the documentation and make its determinations of compliance under § 951.10(c)(2) by the end of that year, as prescribed by the regulation. The suggestion has been made that the Banks be given some additional reasonable period of time after receipt of the project owners' documentation to conduct their own review and compliance determinations. This would be consistent with the approach taken in the regulation for Bank reviews of owner-occupied certifications. *See* 12 CFR 951.10(c)(1).

The Finance Board believes that providing the Banks with an additional 120 days after receipt of the project owner documentation would be a reasonable amount of time to complete the compliance reviews. The Finance Board also believes that this requirement should apply not only to the services and activities review, but also to the review of eligible purposes, actual costs and feasibility required under existing § 951.10(c)(2)(ii).

Accordingly, the proposed rule would amend § 951.10(c)(2) to require each Bank to complete the compliance reviews required thereunder within 120 days after receiving the project owner documentation.

I. Permitting the Banks to Allow Re-Use by Project Sponsors or Members of Recaptured Direct Subsidies or Unused Interest-Rate Subsidies From Prepaid Mortgage Loans For Owner-Occupied Projects—Sections 951.12(e), 951.13(c)(3)(iii)

Prior to 1995, sponsors of owner-occupied projects were allowed to re-use recaptured AHP direct subsidies to provide the same kind of direct subsidy assistance to subsequent eligible households in accordance with the sponsor's approved application. A sponsor also could use the unused interest-rate subsidy of a prepaid mortgage loan funded with an AHP subsidized advance to subsidize the interest rate on another mortgage loan to an eligible household that replaced the prepaid mortgage loan in a pool of mortgage loans held by the member.

In 1995, the Finance Board discontinued authorization of these types of re-use of AHP funds in new projects, pending a comprehensive review and revision of the AHP regulation. The current regulation, which went into effect in 1998, continues to prohibit such re-use of AHP funds. Specifically, the AHP regulation provides generally that an owner-occupied unit that is purchased, constructed, or rehabilitated with the proceeds of an AHP direct subsidy must be subject to a deed restriction requiring that the homeowner repay directly to the Bank a pro rata share of the subsidy if the unit is sold to an ineligible household or refinanced prior to the end of the five-year retention period and is no longer subject to a deed restriction. *See* 12 CFR 951.13(d)(1). The Bank may use these recaptured AHP subsidies to fund project modifications, interest-rate increases in approved projects, homeownership set-aside applications, or an approved alternate project if

sufficient other funds are available. *See* 12 CFR 951.8(c)(4), 951.12(e), 951.14(a)(2). Where mortgage loans financed by an AHP subsidized advance are prepaid by the project to the member, the AHP regulation provides generally that the member must either repay the advance to the Bank and possibly be subject to a prepayment penalty, or maintain the advance outstanding subject to the Bank resetting the interest rate. *See* 12 CFR 951.13(c)(3).

A number of Banks and project sponsors have requested that the Finance Board allow owner-occupied project sponsors (or members in the case of AHP direct subsidies provided through the homeownership set-aside program) to re-use direct subsidies in the ways described above. The Banks and project sponsors maintain that allowing such re-use of direct subsidies can be an efficient use of AHP subsidies. The amounts recaptured or unused are generally quite small, the sponsor receives no additional subsidy from the Bank, and the re-used subsidy continues to assist AHP-eligible households in accordance with the original application commitments. Any household assisted through the re-use of recaptured or unused direct subsidy would be subject to a new five-year retention agreement. *See* 12 CFR 951.5(a)(5), 951.13(c)(4), 951.13(d)(1). Permitting such re-use of direct subsidies can help those sponsors whose projects are aimed at maintaining a core of homeowners in particular areas to promote neighborhood stabilization and revitalization in those areas.

For the reasons discussed above, the Finance Board believes that the Banks should have the authority to allow the re-use of recaptured or unused direct subsidy. Accordingly, the proposed rule would amend §§ 951.12(e) and 951.13(c)(3) to authorize each Bank, in its discretion, as provided in its AHP implementation plan, to allow project sponsors or members to re-use recaptured or unused direct subsidy, respectively, as further prescribed in the proposed rule. One concern that has been raised is that recaptured or unused direct subsidies might not be re-used quickly and could remain idle, when they otherwise could be made available by the Bank for project modifications or new AHP-eligible projects. The proposed rule would address this concern by requiring the Bank to specify in its AHP implementation plan a time limit by which such subsidy must be re-used by the sponsor. A second concern that has been raised is whether the sponsor could earn interest on the recaptured funds while they remain idle. This would not be possible under the proposed rule, which would retain the current requirement that any recaptured or unused direct subsidy be returned directly to the Bank rather being held by the project sponsors, pending subsequent disbursement by the Bank for re-use by the sponsor.

III. Paperwork Reduction Act

The proposed rule does not contain any collections of information pursuant to the Paperwork Reduction Act of 1995. *See* 44 U.S.C. 3501 *et seq.* Therefore, the Finance Board has not submitted any information to the Office of Management and Budget for review.

IV. Regulatory Flexibility Act

The proposed rule would apply only to the Banks, which do not come within the meaning of ''small entities,'' as defined in the Regulatory Flexibility Act (RFA). *See* 5 U.S.C. 601(6). Thus, in accordance with section 605(b) of the RFA, 5 U.S.C. 605(b), the Finance Board hereby certifies that the proposed rule, if promulgated as a final rule, will not have a significant economic impact on a substantial number of small entities.

List of Subjects in 12 CFR Part 951

Community development, Credit, Federal home loan banks, Housing, Reporting and recordkeeping requirements.

Accordingly, the Finance Board hereby proposes to amend part 951, title 12, chapter IX, Code of Federal Regulations, as follows:

PART 951—AFFORDABLE HOUSING PROGRAM

1. The authority citation for part 951 continues to read as follows:

Authority: 12 U.S.C. 1430(j).

2. Amend § 951.1 by:

a. Removing the definition of ''Homeless household''; and

b. In the definition of ''Median income for the area'', redesignating paragraphs (1)(ii) through (1)(iv) and paragraph (2)(ii) as paragraphs (1)(iii) through (1)(v) and paragraph (2)(iii), respectively; and adding new paragraphs (1)(ii) and (2)(ii).

The revisions read as follows:

§ 951.1 Definitions.

* * * * *

Median income for the area.

(1) * * *

(ii) The median income for the area obtained from the Federal Financial Institutions Examination Council;

* * * * *

(2) * * *

(ii) The median income for the area obtained from the Federal Financial Institutions Examination Council;

* * * * *

3. Revise § 951.3(a)(2) to read as follows:

§ 951.3 Operation of Program and adoption of AHP implementation plan.

(a) * * *

(2) *Competitive application program.* That portion of a Bank's required annual AHP contribution that is not set aside to fund homeownership set-aside programs shall be provided to members through a competitive application program, pursuant to the requirements of this part. A Bank may allocate up to the greater of $3 million or 25 percent of its annual required AHP contribution for the subsequent year to the current year's competitive application program. Beginning in 2002 and for subsequent years, the maximum dollar limit set forth in this paragraph shall be adjusted annually by the Finance Board to reflect any percentage increase in the preceding year's Consumer Price Index (CPI) for all urban consumers, as published by the Department of Labor. Each year, as soon as practicable after the publication of the previous year's CPI, the Finance Board shall publish notice by **Federal Register**, distribution of a memorandum, or otherwise, of the CPI-adjusted limit on the maximum competitive application dollar amount.

* * * * *

4. Amend § 951.6 by:

a. Removing the last sentence in paragraph (b)(1);

b. Removing the first sentence in paragraph (b)(4)(i);

c. Revising paragraph (b)(4)(iv)(A); and

d. Revising paragraph (b)(4)(iv)(D).

The revisions read as follows:

§ 951.6 Procedure for approval of applications for funding.

* * * * *

(b) * * *

(4) * * *

(iv) * * *

(A) *Use of donated or conveyed government-owned or other properties.* The creation of housing using a significant proportion of:

(*1*) Land donated by the Federal government or any agency or instrumentality thereof, or any other party;

(*2*) Units conveyed by the Federal government or any agency or instrumentality thereof, regardless of the amount charged for such conveyance; or

(*3*) Units conveyed by any other party for an amount significantly below the fair market value of the property, as

defined by the Bank in its AHP implementation plan.

* * * * *

(D) *Housing for homeless households.* The creation of rental housing, excluding overnight shelters, reserving at least 20 percent of the units for homeless households, the creation of transitional housing for homeless households permitting a minimum of six months occupancy, or the creation of permanent owner-occupied housing reserving at least 20 percent of the units for homeless households. For purposes of this paragraph, the term ''homeless households'' shall have the meaning as defined by the Bank in its AHP implementation plan.

* * * * *

§ 951.7 [Amended]

5. Amend § 951.7 by:

a. In the section heading, adding the words ''or after'' between the words ''to'' and ''project''; and

b. In the introductory text of paragraph (a), adding the words ''or after'' between the words ''to'' and ''final.''

§ 951.9 [Removed]

6. Remove § 951.9.

7. Revise § 951.10(c)(2) introductory text and paragraph (c)(2)(i) to read as follows:

§ 951.10 Initial monitoring requirements.

* * * * *

(c) * * *

(2) *Rental projects.* Each Bank must take the steps necessary to determine that, within 120 days after receiving the documentation described in paragraph (a)(2)(ii) of this section:

(i) The services and activities committed to in the AHP application have been provided in connection with the project; and

* * * * *

8. Amend § 951.12 by revising paragraph (e) to read as follows:

§ 951.12 Remedial actions for noncompliance.

* * * * *

(e) *Use of repaid subsidies*—(1) *Use of repaid AHP subsidies in other AHP-eligible projects.* Except as provided in paragraph (e)(2) of this section, amounts of AHP subsidy repaid to a Bank pursuant to this section, including any interest, shall be made available by the Bank for other AHP-eligible projects.

(2) *Re-use of repaid AHP subsidies in same project.* Where AHP direct subsidy has been provided by the project sponsor (or the member in the case of direct subsidy provided through the homeownership set-aside program) as downpayment, closing cost, rehabilitation or interest rate buydown assistance to a household to purchase an owner-occupied unit pursuant to an approved AHP application, amounts of AHP subsidy repaid to the Bank, including any interest, may, if authorized, in the Bank's discretion, in its AHP implementation plan and within the period of time specified by the Bank in such plan, be made available by the project sponsor or member to another AHP-eligible household to purchase an owner-occupied unit in accordance with the terms of the approved AHP application.

* * * * *

9. Amend § 951.13 by adding paragraph headings to paragraph (c)(3)(i) and (c)(3)(ii), and adding paragraph (c)(3)(iii) to read as follows:

§ 951.13 Agreements.

* * * * *

(c) * * *

(3) * * *

(i) *Repayment of advance.* * * *

(ii) *Maintain advance outstanding with reset interest rate.* * * *

(iii) *Loan pool substitution.* If authorized, in the Bank's discretion, in its AHP implementation plan, continue to maintain the advance outstanding without the Bank resetting the interest rate, provided that:

(A) The loan, before its prepayment, was used by a household to purchase an owner-occupied unit pursuant to the project sponsor's approved AHP application;

(B) The loan was purchased by the member from the project sponsor and held by the member as part of a pool of loans financed by subsidized advances or direct subsidies and purchased from the project sponsor;

(C) Within the period of time specified by the Bank in its AHP implementation plan, the member makes the unused AHP subsidy resulting from the prepaid loan available to the project sponsor to reduce the interest rate on a new loan from the project sponsor to another AHP-eligible household to purchase an owner-occupied unit in accordance with the terms of the approved AHP application;

(D) Within the period of time specified by the Bank in its AHP implementation plan, the member purchases the new loan for inclusion in the loan pool; and

(E) After substitution of the new loan for the prepaid loan in the loan pool, the aggregate principal balance of the loan pool is the same as or higher than the original principal balance of the loan pool.

* * * * *

Dated: December 11, 2001.

By the Board of Directors of the Federal Housing Finance Board.

J. Timothy O'Neill,

Chairman.

[FR Doc. 01–31569 Filed 12–26–01; 8:45 am]

BILLING CODE 6725–01–P

DEPARTMENT OF TRANSPORTATION

Federal Aviation Administration

14 CFR Part 39

[Docket No. 98–ANE–61–AD]

RIN 2120–AA64

Airworthiness Directives; Pratt & Whitney (PW) PW2000 Series Turbofan Engines

AGENCY: Federal Aviation Administration, DOT.

ACTION: Supplemental notice of proposed rulemaking (NPRM); reopening of comment period.

SUMMARY: This action revises an earlier proposed airworthiness directive (AD), applicable to certain Pratt & Whitney (PW) PW2000 series turbofan engines, that would supersede an existing airworthiness directive (AD) by modifying the airworthiness limitations section of the manufacturer's manual and an air carrier's approved continuous airworthiness maintenance program to incorporate additional inspection requirements. This action revises the proposed rule by adding the low pressure compressor (LPC) hub assembly, high pressure turbine (HPT) 1st stage disk, and HPT 2nd stage hub to the additional inspection requirements. The regulatory section revises the manufacturer's Airworthiness Limitations Section (ALS) of the Instructions for Continued Airworthiness (ICA), and for air carrier operations revises the approved continuous airworthiness maintenance program. The actions specified by this proposed AD are intended to prevent critical life-limited rotating engine part failure, which could result in an uncontained engine failure and damage to the airplane.

DATES: Comments must be received by January 28, 2002.

ADDRESSES: Submit comments in triplicate to the Federal Aviation Administration (FAA), New England Region, Office of the Regional Counsel, Attention: Rules Docket No. 98–ANE–

61–AD, 12 New England Executive Park, Burlington, MA 01803–5299. Comments may be inspected at this location, by appointment, between 8 a.m. and 4:30 p.m., Monday through Friday, except Federal holidays. Comments may also be sent via the Internet using the following address: ''*9-ane-adcomment@faa.gov*.'' Comments sent via the Internet must contain the docket number in the subject line.

FOR FURTHER INFORMATION CONTACT: Jason Yang, Aerospace Engineer, Engine Certification Office, FAA, Engine and Propeller Directorate, 12 New England Executive Park, Burlington, MA 01803–5299; telephone (781) 238–7747, fax (781) 238–7199.

SUPPLEMENTARY INFORMATION:

Comments Invited

Interested persons are invited to participate in the making of the proposed rule by submitting such written data, views, or arguments as they may desire. Communications should identify the Rules Docket number and be submitted in triplicate to the address specified above. All communications received on or before the closing date for comments, specified above, will be considered before taking action on the proposed rule. The proposals contained in this action may be changed in light of the comments received.

Comments are specifically invited on the overall regulatory, economic, environmental, and energy aspects of the proposed rule. All comments submitted will be available, both before and after the closing date for comments, in the Rules Docket for examination by interested persons. A report summarizing each FAA-public contact concerned with the substance of this proposal will be filed in the Rules Docket.

Commenters wishing the FAA to acknowledge receipt of their comments submitted in response to this proposal must submit a self-addressed, stamped postcard on which the following statement is made: ''Comments to Docket Number 98–ANE–61–AD.'' The postcard will be date stamped and returned to the commenter.

Availability of NPRM's

Any person may obtain a copy of this NPRM by submitting a request to the FAA, New England Region, Office of the Regional Counsel, Attention: Rules Docket No. 98–ANE–61–AD, 12 New England Executive Park, Burlington, MA 01803–5299.

Discussion

A proposal to amend part 39 of the Federal Aviation Regulations (14 CFR part 39) to add an airworthiness directive (AD), applicable to certain Pratt & Whitney (PW) PW2000 series turbofan engines, was published as a notice of proposed rulemaking (NPRM) in the **Federal Register** on November 1, 2001 (66 FR 55138). That NPRM would have modified the airworthiness limitations section of the manufacturer's manual and an air carrier's approved continuous airworthiness maintenance program to incorporate additional inspection requirements. That NPRM was prompted by an FAA study of in-service events involving uncontained failures of critical rotating engine parts. That condition, if not corrected, could result in an uncontained engine failure and damage to the airplane.

Since the issuance of that NPRM, the FAA has become aware that the LPC hub assembly, HPT 1st stage disk, and HPT 2nd stage hub were inadvertantly omitted from the list of parts for enhanced inspection, and must be added. This proposal would add to that NPRM, modification of the airworthiness limitations section of the manufacturer's manual and air carrier's approved continuous airworthiness maintenance program to incorporate additional inspection requirements.

Since this change expands the scope of the originally proposed rule, the FAA has determined that it is necessary to reopen the comment period to provide additional opportunity for public comment.

Economic Analysis

The FAA estimates that 724 engines installed on airplanes of US registry would be affected by this proposed AD, that it would take approximately 20 work hours per engine to do the proposed actions. The average labor rate is $60 per work hour. The cost effect of the added inspections per engine is approximately $1,200 per year, with the approximate total cost for the U.S. fleet of $868,800 per year.

Regulatory Analysis

The regulations adopted herein will not have a substantial direct effect on the States, on the relationship between the national Government and the States, or on the distribution of power and responsibilities among the various levels of government. Therefore, it is determined that this action does not have federalism implications under Executive Order 13132.

For the reasons discussed above, I certify that this proposed regulation (1) is not a ''significant regulatory action'' under Executive Order 12866; (2) is not a ''significant rule'' under the DOT Regulatory Policies and Procedures (44 FR 11034, February 26, 1979); and (3) if promulgated, will not have a significant economic effect, positive or negative, on a substantial number of small entities under the criteria of the Regulatory Flexibility Act. A copy of the draft regulatory evaluation prepared for this action is contained in the Rules Docket. A copy of it may be obtained by contacting the Rules Docket at the location provided under the caption **ADDRESSES.**

List of Subjects in 14 CFR Part 39

Air transportation, Aircraft, Aviation safety, Safety.

The Proposed Amendment

Accordingly, pursuant to the authority delegated to me by the Administrator, the Federal Aviation Administration proposes to amend part 39 of the Federal Aviation Regulations (14 CFR part 39) as follows:

PART 39—AIRWORTHINESS DIRECTIVES

1. The authority citation for part 39 continues to read as follows:

Authority: 49 U.S.C. 106(g), 40113, 44701.

§ 39.13 [Amended]

2. Section 39.13 is amended by adding the following new airworthiness directive:

Pratt & Whitney: Docket No. 98–ANE–61–AD. Supersedes AD 2000–21–09, Amendment 39–11914.

Applicability: This airworthiness directive (AD) is applicable to Pratt & Whitney (PW) PW2037, PW2040, PW2037M, PW2240, PW2337, PW2043, PW2643, and PW2143, series turbofan engines, installed on but not limited to Boeing 757 series and Ilyushin IL–96T series airplanes.

Note 1: This AD applies to each engine identified in the preceding applicability provision, regardless of whether it has been modified, altered, or repaired in the area subject to the requirements of this AD. For engines that have been modified, altered, or repaired so that the performance of the requirements of this AD is affected, the owner/operator must request approval for an alternative method of compliance in accordance with paragraph (c) of this AD. The request should include an assessment of the effect of the modification, alteration, or repair on the unsafe condition addressed by this AD; and, if the unsafe condition has not been eliminated, the request should include specific proposed actions to address it.

Compliance: Required as indicated, unless already done.

To prevent critical life-limited rotating engine part failure, which could result in an

uncontained engine failure and damage to the airplane, do the following:

(a) Within 30 days after the effective date of this AD, revise the manufacturer's Time Limits section (TLS) of the manufacturer's engine manual, as appropriate for PW PW2037, PW2040, PW2037M, PW2240, PW2337, PW2043, PW2643, and PW2143 series turbofan engines, and for air carriers revise the approved continuous airworthiness maintenance program, by adding the following:

''MANDATORY INSPECTIONS

(1) Perform inspections of the following parts at each piece-part opportunity in accordance with the instructions provided in PW2000 Engine Manuals 1A6231 and 1B2412:

Nomenclature	Part number	EM manual section	Inspection check	Subtask
Hub, LPC Assembly	ALL	72–31–04	–06.	
Disk, HPT 1st Stage	ALL	72–52–02	FPI entire disk per 72–52–00, Inspection/Check–02.	72–52–02–230–007
Hub, HPT 2nd Stage	ALL	72–52–16	Fpi entire hub per 72–52–00, Inspection/Check–02.	72–52–16–230–007
Hub, HPC Front	ALL	72–35–02	–05.	
Disk, HPC Drum Rotor Assembly (7–15)	ALL	72–35–03	–04	
Disk, HPC Drum Rotor Assembly (16–17)	ALL	72–35–10	–05	
Disk, HPC 16th Stage	ALL	72–35–06	–04	
Disk, HPC 17th Stage	ALL	72–35–07	–04	
LPC Drive Turbine Shaft	ALL	72–32–01	–06	
Hub, Turbine Rear	ALL	72–53–81	–06	
Disk, LPT 3rd Stage	ALL	72–53–31	–01	
Disk, LPT 4th Stage	ALL	72–35–41	–01	
Disk, LPT 5th Stage	ALL	72–32–51	–01	
Disk, LPT 6th Stage	ALL	72–53–61	–01	
Disk, LPT 7th Stage	ALL	72–53–71	–01	

(2) For the purposes of these mandatory inspections, piece-part opportunity means:

(i) The part is considered completely disassembled when done in accordance with the disassembly instructions in the manufacturer's engine manual to either part number level listed in the table above, and

(ii) The part has accumulated more than 100 cycles in service since the last piece-part opportunity inspection, provided that the part was not damaged or related to the cause for its removal from the engine.''

(b) Except as provided in paragraph (e) of this AD, and notwithstanding contrary provisions in § 43.16 of Federal Aviation Regulations (14 CFR 43.16), these enhanced inspections must be performed only in accordance with the TLS of the appropriate PW2000 series engine manuals.

Alternative Methods of Compliance

(c) An alternative method of compliance or adjustment of the compliance time that provides an acceptable level of safety may be used if approved by the Manager, Engine Certification Office (ECO). Operators must submit their requests through an appropriate FAA Principal Maintenance Inspector (PMI), who may add comments and then send it to the Manager, ECO.

Note 2: Information concerning the existence of approved alternative methods of compliance with this airworthiness directive, if any, may be obtained from the ECO.

Special Flight Permits

(d) Special flight permits may be issued in accordance with §§ 21.197 and 21.199 of the Federal Aviation Regulations (14 CFR 21.197 and 21.199) to operate the aircraft to a location where the requirements of this AD can be done.

(e) FAA-certificated air carriers that have an approved continuous airworthiness maintenance program in accordance with the record keeping requirement of § 121.369 (c) of the Federal Aviation Regulations (14 CFR 121.369 (c)) of this chapter must maintain records of the mandatory inspections that result from revising the Time Limits section of the Instructions for Continuous Airworthiness (ICA) and the air carrier's continuous airworthiness program. Alternatively, certificated air carriers may establish an approved system of record retention that provides a method for preservation and retrieval of the maintenance records that include the inspections resulting from this AD, and include the policy and procedures for implementing this alternate method in the air carrier's maintenance manual required by § 121.369 (c) of the Federal Aviation Regulations (14 CFR 121.369 (c)); however, the alternate system must be accepted by the appropriate PMI and require the maintenance records be maintained either indefinitely or until the work is repeated. Records of the piece-part inspections are not required under § 121.380 (a)(2)(vi) of the Federal Aviation Regulations (14 CFR 121.380 (a)(2)(vi)). All other operators must maintain the records of mandatory inspections required by the applicable regulations governing their operations.

Issued in Burlington, Massachusetts, on December 17, 2001.

Jay J. Pardee,

Manager, Engine and Propeller Directorate, Aircraft Certification Service.

[FR Doc. 01–31557 Filed 12–26–01; 8:45 am]

BILLING CODE 4910–13–U

DEPARTMENT OF TRANSPORTATION

Federal Aviation Administration

14 CFR Part 39

[Docket No. 2001–SW–40–AD]

RIN 2120–AA64

Airworthiness Directives; MD Helicopters, Inc. Model 369D, 369E, 369F, and 369FF Helicopters

AGENCY: Federal Aviation Administration, DOT.

ACTION: Notice of proposed rulemaking (NPRM).

SUMMARY: This document proposes the adoption of a new airworthiness directive (AD) for MD Helicopters, Inc. Model 369D, 369E, 369F, and 369FF helicopters with a tailboom modified according to Aerometals supplemental type certificate (STC) SH5055NM or SH4801NM. The AD would require an inspection to identify the part number (P/N) of the bolts that attach the tail rotor gearbox to the tailboom and replacing any bolt of inadequate grip length with an airworthy bolt. This AD would also require determining the number of bolt threads protruding from each nutplate and adding an additional washer if more than four threads protrude. This proposal is prompted by the discovery that bolts of inadequate grip length were specified to attach the tail rotor gearbox to the tailboom. The actions specified by the proposed AD are intended to prevent loss of a tail rotor gearbox due to bolts of inadequate

grip length and subsequent loss of control of the helicopter.

DATES: Comments must be received on or before February 25, 2002.

ADDRESSES: Submit comments in triplicate to the Federal Aviation Administration (FAA), Office of the Regional Counsel, Southwest Region, Attention: Rules Docket No. 2001–SW–40–AD, 2601 Meacham Blvd., Room 663, Fort Worth, Texas 76137. You may also send comments electronically to the Rules Docket at the following address: *9-asw-adcomments@faa.gov.* Comments may be inspected at the Office of the Regional Counsel between 9 a.m. and 3 p.m., Monday through Friday, except Federal holidays.

FOR FURTHER INFORMATION CONTACT: John Cecil, Aviation Safety Engineer, FAA, Los Angeles Aircraft Certification Office, Airframe Branch, 3960 Paramount Blvd., Lakewood, California 90712–4137, telephone (562) 627–5228, fax (562) 627–5210.

SUPPLEMENTARY INFORMATION:

Comments Invited

Interested persons are invited to participate in the making of the proposed rule by submitting such written data, views, or arguments as they may desire. Communications should identify the Rules Docket number and be submitted in triplicate to the address specified above. All communications received on or before the closing date for comments will be considered before taking action on the proposed rule. The proposals contained in this document may be changed in light of the comments received.

Comments are specifically invited on the overall regulatory, economic, environmental, and energy aspects of the proposed rule. All comments submitted will be available, both before and after the closing date for comments, in the Rules Docket for examination by interested persons. A report summarizing each FAA-public contact concerned with the substance of this proposal will be filed in the Rules Docket.

Commenters wishing the FAA to acknowledge receipt of their mailed comments submitted in response to this proposal must submit a self-addressed, stamped postcard on which the following statement is made: ''Comments to Docket No. 2001–SW–40–AD.'' The postcard will be date stamped and returned to the commenter.

Availability of NPRMs

Any person may obtain a copy of this NPRM by submitting a request to the FAA, Office of the Regional Counsel, Southwest Region, Attention: Rules Docket No. 2001–SW–40–AD, 2601 Meacham Blvd., Room 663, Fort Worth, Texas 76137.

Discussion

This document proposes adopting a new AD for MD Helicopters, Inc. Model 369D, 369E, 369F, and 369FF helicopters with a tailboom modified according to either Aerometals STC SH5055NM or SH4801NM. Yehnert Helicopters, Inc. formerly owned both STCs. This proposal is prompted by the discovery that the maintenance instructions supplied to installers of STCs SH5055NM and SH4801NM incorrectly specified the tail rotor gearbox attaching bolt as P/N NAS6204–25, which has an inadequate grip length. This condition, if not corrected, could result in loss of a tail rotor gearbox and subsequent loss of control of the helicopter.

The FAA has reviewed Aerometals Service Bulletin SB–001, dated August 3, 2000, which describes procedures for verifying that the proper attaching bolts are used to install the tail rotor gearbox to the tailboom.

We have identified an unsafe condition that is likely to exist or develop on other MD Helicopters, Inc. Model 369D, 369E, 369F, and 369FF helicopters of the same type design modified by STC SH5055NM or SH4801NM. Therefore, the proposed AD would require the following:

- Inspect the tail rotor gearbox attach bolts to determine the P/N. Replace any bolt for which a P/N cannot be determined and any bolt that is not P/N NAS1304–26 before further flight. After replacing a bolt, inspect for loosening of the bolt torque at a specified interval. Retorque the bolt, reapply the slippage mark, and reinspect the torque between 2 and 10 hours TIS thereafter.
- Remove the tailboom control rod and determine the number of bolt threads protruding from each nutplate on the internal surface of the aft tailboom frame casting. At least one thread must protrude. If more than four threads protrude, add an additional washer under the bolt head.

The FAA estimates that this proposed AD would affect 500 helicopters of U.S. registry. The FAA estimates approximately ½ work hour would be required to determine whether either STC has been installed. For the estimated 40 helicopters that have been modified by either STC, approximately 1 work hour per helicopter will be required to inspect and replace the bolts. The average labor rate is approximately $60 per work hour. Required parts would cost approximately $40 per helicopter. Based on these figures, the total cost impact of the proposed AD on U.S. operators is estimated to be $19,000.

The regulations proposed herein would not have a substantial direct effect on the States, on the relationship between the national Government and the States, or on the distribution of power and responsibilities among the various levels of government. Therefore, it is determined that this proposal would not have federalism implications under Executive Order 13132.

For the reasons discussed above, I certify that this proposed regulation (1) is not a ''significant regulatory action'' under Executive Order 12866; (2) is not a ''significant rule'' under the DOT Regulatory Policies and Procedures (44 FR 11034, February 26, 1979); and (3) if promulgated, will not have a significant economic impact, positive or negative, on a substantial number of small entities under the criteria of the Regulatory Flexibility Act. A copy of the draft regulatory evaluation prepared for this action is contained in the Rules Docket. A copy of it may be obtained by contacting the Rules Docket at the location provided under the caption **ADDRESSES.**

List of Subjects in 14 CFR Part 39

Air transportation, Aircraft, Aviation safety, Safety.

The Proposed Amendment

Accordingly, pursuant to the authority delegated to me by the Administrator, the Federal Aviation Administration proposes to amend part 39 of the Federal Aviation Regulations (14 CFR part 39) as follows:

PART 39—AIRWORTHINESS DIRECTIVES

1. The authority citation for part 39 continues to read as follows:

Authority: 49 U.S.C. 106(g), 40113, 44701.

§ 39.13 [Amended]

2. Section 39.13 is amended by adding a new airworthiness directive to read as follows:

MD Helicopters, Inc.: Docket No. 2001–SW–40–AD.

Applicability: Model 369D, 369E, 369F, and 369FF helicopters, modified in accordance with Aerometals Supplemental Type Certificate (STC) SH5055NM or SH4801NM, certificated in any category.

Note 1: This AD applies to each helicopter identified in the preceding applicability provision, regardless of whether it has been otherwise modified, altered, or repaired in the area subject to the requirements of this

AD. For helicopters that have been modified, altered, or repaired so that the performance of the requirements of this AD is affected, the owner/operator must request approval for an alternative method of compliance in accordance with paragraph (c) of this AD. The request should include an assessment of the effect of the modification, alteration, or repair on the unsafe condition addressed by this AD; and if the unsafe condition has not been eliminated, the request should include specific proposed actions to address it.

Compliance: Required as indicated, unless accomplished previously.

To prevent loss of the tail rotor gearbox due to attaching bolts of inadequate grip length and subsequent loss of control of the helicopter, accomplish the following:

(a) Within 25 hours time-in-service (TIS), conduct the following inspections:

(1) For each tail rotor gearbox attaching bolt (bolt):

(i) Determine the part number (P/N).

(ii) If the P/N cannot be determined or if the bolt is not P/N NAS1304–26, before further flight, replace the bolt with bolt, P/N NAS1304–26.

(iii) Torque the bolt to 100–110 in-lbs and apply a slippage mark.

(2) Remove the tailboom control rod and determine the number of bolt threads protruding from each nutplate on the internal surface of the aft tailboom frame casting, P/N 369D23503, as shown in Figure 1. At least one thread must protrude. If more than four threads protrude, add an additional washer, P/N AN960D416, under the bolt head. Torque the bolt to 100–110 in-lbs., and reapply a slippage mark.

(b) Between 2 and 10 hours TIS after accomplishing the requirements of paragraph (a) of this AD, inspect the torque on each bolt by applying 100 in-lbs. If any bolt movement occurs, retorque the bolt to 100–110 in-lbs. and reapply a slippage mark. Reinspect the torque between 2 and 10 hours TIS thereafter until no bolt movement occurs.

Note 2: Aerometals Service Bulletin SB–001, dated August 3, 2000, pertains to the subject of this AD.

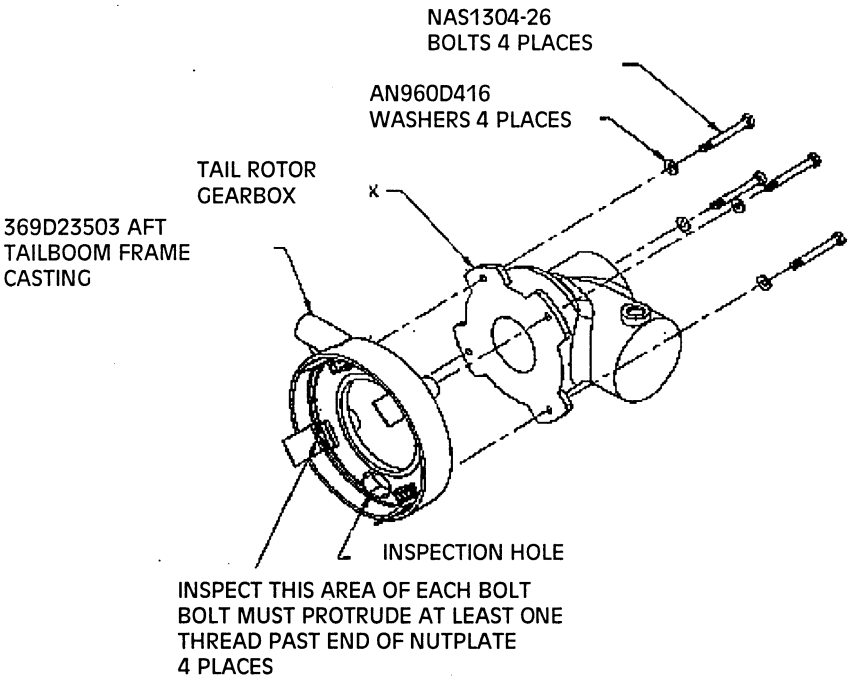

Figure 1 – Inspection Location

(c) An alternative method of compliance or adjustment of the compliance time that provides an acceptable level of safety may be used if approved by the Manager, Los Angeles Aircraft Certification Office (LAACO), FAA. Operators shall submit their requests through an FAA Principal Maintenance Inspector, who may concur or comment and then send it to the Manager, LAACO.

Note 3: Information concerning the existence of approved alternative methods of compliance with this AD, if any, may be obtained from the LAACO.

(d) Special flight permits will not be issued.

Issued in Fort Worth, Texas, on December 14, 2001.

David A. Downey,

Manager, Rotorcraft Directorate, Aircraft Certification Service.

[FR Doc. 01–31556 Filed 12–26–01; 8:45 am]

BILLING CODE 4910–13–U

DEPARTMENT OF TRANSPORTATION

Federal Aviation Administration

14 CFR Part 39

[Docket No. 2001–CE–36–AD]

RIN 2120–AA64

Airworthiness Directives; Air Tractor, Inc. AT–400, AT–500, and AT–800 Series Airplanes

AGENCY: Federal Aviation Administration, DOT.

ACTION: Notice of proposed rulemaking (NPRM).

SUMMARY: This document proposes to supersede Airworthiness Directive (AD) 2001–10–04 R1, which lowered the safe life for the wing lower spar cap on

certain Air Tractor, Inc. (Air Tractor) AT–400, AT–500, and AT–800 series airplanes. AD 2001–10–04 R1 resulted from numerous reports of cracks in the ⅜-inch bolthole of the wing lower spar cap on the affected airplanes. This proposed AD would maintain the safe life and add a requirement for you to eddy—current inspect the wing lower spar cap immediately prior to the replacement/modification in order to detect and correct any crack in a bolthole before it extends to the modified center section of the wing and repair that crack or replace the wing section. This proposed AD would also further reduce the safe life for certain AT–400 and AT–500 series airplanes that incorporate or have incorporated Marburger Enterprises, Inc. winglets. These winglets are installed in accordance with Supplemental Type Certificate (STC) SA00490LA. The actions specified by this proposed AD are intended to prevent fatigue cracks from occurring in the wing lower spar cap before the originally-established safe life is reached. Fatigue cracks in the wing lower spar cap, if not detected and corrected, could result in the wing separating from the airplane during flight.

DATES: The Federal Aviation Administration (FAA) must receive any comments on this proposed rule on or before February 15, 2002 .

ADDRESSES: Submit comments to FAA, Central Region, Office of the Regional Counsel, Attention: Rules Docket No. 2001–CE–36–AD, 901 Locust, Room 506, Kansas City, Missouri 64106. You may view any comments at this location between 8 a.m. and 4 p.m., Monday through Friday, except Federal holidays.

You may get service information that applies to this proposed AD from Air Tractor, Incorporated, P.O. Box 485, Olney, Texas 76374; or Marburger Enterprises, Inc., 1227 Hillcourt, Williston, North Dakota 58801; telephone: (800) 893–1420 or (701) 774–0230; facsimile: (701) 572–2602. You may also view this information at the Rules Docket at the address above.

FOR FURTHER INFORMATON CONTACT: Direct all questions to:

—For the airplanes that do not incorporate and never have incorporated Marburger Enterprises, Inc. winglets: Rob Romero, Aerospace Engineer, FAA, Fort Worth Airplane Certification Office, 2601 Meacham Boulevard, Fort Worth, Texas 76193–0150; telephone: (817) 222–5102; facsimile: (817) 222–5960; and

—For certain AT–400 and AT–500 series airplanes that incorporate or have incorporated Marburger Enterprises, Inc. winglets: John Cecil, Aerospace Engineer, Los Angeles Aircraft Certification Office, FAA, 3960 Paramount Boulevard, Lakewood, California, 90712; telephone: (562) 627-5228; facsimile: (562) 627–5210.

SUPPLEMENTARY INFORMATION:

Comments Invited

How do I comment on this proposed AD? The FAA invites comments on this proposed rule. You may submit whatever written data, views, or arguments you choose. You need to include the rule's docket number and submit your comments to the address specified under the caption **ADDRESSES.** We will consider all comments received on or before the closing date. We may amend this proposed rule in light of comments received. Factual information that supports your ideas and suggestions is extremely helpful in evaluating the effectiveness of this proposed AD action and determining whether we need to take additional rulemaking action.

Are there any specific portions of this proposed AD I should pay attention to? The FAA specifically invites comments on the overall regulatory, economic, environmental, and energy aspects of this proposed rule that might suggest a need to modify the rule. You may view all comments we receive before and after the closing date of the rule in the Rules Docket. We will file a report in the Rules Docket that summarizes each contact we have with the public that concerns the substantive parts of this proposed AD.

How can I be sure FAA receives my comment? If you want FAA to acknowledge the receipt of your comments, you must include a self-addressed, stamped postcard. On the postcard, write ''Comments to Docket No. 2001–CE–36–AD.'' We will date stamp and mail the postcard back to you.

Discussion

Has FAA taken any action to this point? Several reports of cracked wing lower spar caps on Air Tractor AT–400, AT–500, and AT–800 series airplanes have caused the manufacturer (Air Tractor) to recalculate the fatigue life of the wing lower spar cap on these airplanes. One report was of an accident where the wing separated from the airplane during flight. The cracks are originating in the outboard ⅜-inch bolthole of the wing lower spar cap.

To address this condition, FAA issued AD 2001–10–04, Amendment 39–12230 (66 FR 27014, May 16, 2001). This AD lowers the safe life for the wing lower spar cap on Air Tractor AT–400, AT–500, and AT–800 series airplanes. This AD also allows for inspection, using eddy current methods, of the wing lower spar cap for airplanes that are at or over the lower safe life and parts are not available. Operation of the airplane is not allowed if cracks are found and inspections must be terminated when parts become available or after performing three repetitive inspections.

AD 2001–10–04 superseded AD 2000–14–51, Amendment 39–11837 (65 FR 46567, July 31, 2000). AD 2000–14–51 required inspection of the wing lower spar cap for cracks on Air Tractor Models AT–501, AT–502, and AT–502A airplanes, and modification or replacement of any cracked wing lower spar cap.

We inadvertently included certain AT–800 series airplanes in the Applicability of AD 2001–10–04. Those AT–800 series airplanes that are equipped with the factory-supplied part number 80540 computerized fire gate should not be affected by AD 2001–10–04. Therefore, we revised this AD to incorporate this change. AD 2001–10–04 R1, Amendment 39–12247, was published in the **Federal Register** on June 4, 2001 (66 FR 29900).

What has happened since AD 2001–10–04 R1 to initiate this action? In response to AD 2001–10–04 R1, FAA received a comment from the National Transportation Safety Board that recommended an eddy-current inspection requirement immediately prior to the accomplishment of the two-part modification described in Snow Engineering Service Letters #197, #202, #203, or #205, all Revised March 26, 2001, as applicable. This is to eliminate the possibility that a crack that exists in a bolt hole prior to the modification is still present after accomplishing the modification. Prior to the modification, any crack present will be larger than it would appear after the outermost bolt holes are enlarged. This makes the crack easier to detect and gives the mechanic an area to concentrate on any post-modification inspections.

Additional analysis also indicates a higher wing root bending moment that could lead to reduction of the safe life for certain AT–400 and AT–500 series airplanes with a certain configuration. Airplanes with this configuration either incorporate or have incorporated Marburger Enterprises, Inc. winglets on the wing lower spar cap. These winglets are installed in accordance with Supplemental Type Certificate (STC) SA00490LA. We have developed criteria for determining what the new safe life should be for airplanes that either incorporate or have incorporated these winglets.

The FAA's Determination and an Explanation of the Provisions of this Proposed AD

What has FAA decided?

After examining the circumstances and reviewing all available information related to the incidents described above, we have determined that:

—The unsafe condition referenced in this document exists or could develop on other AT–400, AT–500, and AT–800 series airplanes (specific models as referenced in the AD) of the same type design;

—All airplanes should have the eddy-current inspection accomplished on the wing lower spar cap immediately prior to the replacement/modification in order to detect and correct any crack in a bolthole before it extends to the modified center section of the wing;

—Certain AT–400 and AT–500 series airplanes that incorporate or have incorporated Marburger Enterprises, Inc. winglets should have the safe life further reduced; and

—AD action should be taken in order to correct this unsafe condition.

What would this proposed AD require? This proposed AD would supersede AD 2001–10–04 R1 with a new AD that would maintain the safe life and would add a requirement for you to eddy-current inspect the wing lower spar cap immediately prior to the replacement/modification in order to detect and correct any crack in a bolthole before it extends to the modified center section of the wing and repair that crack or replace the wing section. The proposed AD would also further reduce the safe life for those AT–400 and AT–500 series airplanes that incorporate or have incorporated Marburger Enterprises, Inc. winglets.

Cost Impact

How many airplanes would this proposed AD impact? We estimate that this proposed AD affects 1,179 airplanes in the U.S. registry.

What would be the cost impact of this proposed AD on owners/operators of the affected airplanes? We estimate the following costs to accomplish the proposed inspection:

Labor cost	Parts cost	Total cost per airplane	Total cost on U.S. operators
2 workhours at $60 per hour = $120	No parts required for inspection.	$120	$141,480

We estimate the following costs to accomplish the proposed replacement/modification:

Labor cost	Parts cost	Total cost Per Airplane	Total cost on U.S. operators
210 workhours at $60 per hour = $7,200	$11,500	$18,700	$22,047,300

What is the difference between the cost impact of this proposed AD and the cost impact of AD 2001–10–04 R1? AD 2001–10–04 R1 already established the safe life for the lower wing spar cap on the affected airplanes. Therefore, the replacement/modification is already required through that AD. The only difference in the cost impact upon the public of this proposed AD and AD 2001–10–04 R1 is the cost for the eddy-current inspection upon replacement and the further safe life reduction for those AT–400 and AT–500 series airplanes that incorporate or have incorporated Marburger Enterprises, Inc. winglets.

Regulatory Impact

Would this proposed AD impact various entities? The regulations proposed herein would not have a substantial direct effect on the States, on the relationship between the national government and the States, or on the distribution of power and responsibilities among the various levels of government. Therefore, it is determined that this proposed rule would not have federalism implications under Executive Order 13132.

Would this proposed AD involve a significant rule or regulatory action? For the reasons discussed above, I certify that this proposed action (1) is not a ''significant regulatory action'' under Executive Order 12866; (2) is not a ''significant rule'' under DOT Regulatory Policies and Procedures (44 FR 11034, February 26, 1979); and (3) if promulgated, will not have a significant economic impact, positive or negative, on a substantial number of small entities under the criteria of the Regulatory Flexibility Act. A copy of the draft regulatory evaluation prepared for this action has been placed in the Rules Docket. A copy of it may be obtained by contacting the Rules Docket at the location provided under the caption **ADDRESSES**.

List of Subjects in 14 CFR Part 39

Air transportation, Aircraft, Aviation safety, Safety.

The Proposed Amendment

Accordingly, under the authority delegated to me by the Administrator, the Federal Aviation Administration proposes to amend part 39 of the Federal Aviation Regulations(14 CFR part 39) as follows:

PART 39—AIRWORTHINESS DIRECTIVES

1. The authority citation for part 39 continues to read as follows:

Authority: 49 U.S.C. 106(g), 40113, 44701.

§ 39.13 [Amended]

2. FAA amends § 39.13 by removing Airworthiness Directive (AD) 2001–10–04 R1, Amendment 39–12247 (66 FR 29900, June 4, 2001), and by adding a new AD to read as follows:

Air Tractor, Inc.: Docket No. 2001-CE–36–AD; Supersedes AD 2001–10–04 R1, Amendment 39–12247.

(a) *What airplanes are affected by this AD?* Use paragraph (a)(1) of this AD for airplanes that do not incorporate and never have incorporated winglets and use paragraph (a)(2) of this AD for certain AT–400 and AT–500 series airplanes that incorporate or have incorporated Marburger Enterprises, Inc. winglets.

(1) The following presents airplanes (certificated in any category) that are affected by this AD, along with the new safe life (presented in hours time-in-service (TIS)) of the wing lower spar cap for all airplane models and serial numbers:

Model	Serial Nos.	Safe life
AT–400	all serial numbers beginning with 0416	13,300 hours TIS.
AT–401	0662 through 0951	10,757 hours TIS.
AT–401B	0952 through 1014 and 1016 though 1020	6,948 hours TIS.
AT–401B	1015 and 1021 through 1124	7,777 hours TIS
AT–402	0694 through 0951	7,440 hours TIS.
AT–402A	0738 through 0951	7,440 hours TIS.
AT–402A	0952 through 1020	4,589 hours TIS.
AT–402A	1021 through 1124	5,268 hours TIS.
AT–402B	0966 through 1020	4,589 hours TIS.
AT–402B	1021 through 1124	5,268 hours TIS.
AT–501	0002 through 0061	4,531 hours TIS.
AT–501	all serial numbers beginning with 0062	7,693 hours TIS.
AT–502	0003 through 0236	4,000 hours TIS.
AT–502A	0158 through 0618	3,000 hours TIS.
AT–502B	0187 through 0618	4,000 hours TIS.
AT–503A	all serial numbers beginning with 0067	4,000 hours TIS.
AT–802	0001 through 0059 except those equipped with the factory-supplied part number 80540 computerized fire gate.	4,132 hours TIS.
AT–802	0060 through 0091 except those equipped with the factory-supplied part number 80540 computerized fire gate.	4,188 hours TIS.
AT–802	0092 through 0101 except those equipped with the factory-supplied part number 80540 computerized fire gate.	8,163 hours TIS.
AT–802A	0003 through 0059 except those equipped with the factory-supplied part number 80540 computerized fire gate.	4,969 hours TIS.
AT–802A	0060 through 0091 except those equipped with the factory-supplied part number 80540 computerized fire gate.	4,531 hours TIS.
AT–802A	0092 through 0101 except those equipped with the factory-supplied part number 80540 computerized fire gate.	8,648 hours TIS.

Note 1: Piston powered aircraft that have been converted to turbine power should use the limits for corresponding serial number turbine-powered aircraft.

(2) The following presents airplanes (certificated in any category) that could incorporate or could have incorporated Marburger Enterprises, Inc. winglets. These winglets are installed in accordance with Supplemental Type Certificate (STC) SA00490LA. Use the winglet usage factor in the table below, the safe life specified in paragraph (a)(1) of this AD, and the instructions included in the Appendix to this AD to determine the new safe life of these airplanes:

Model	Serial Nos.	Winglet usage factor
AT–401	0662 through 0951	1.6
AT–401B	0952 through 1014 and 1016 though 1020	1.1
AT–401B	1015 and 1021 through 1124	1.1
AT–402	0694 through 0951	1.6
AT–402A	0738 through 0951	1.6
AT–402A	0952 through 1020	1.1
AT–402A	1021 through 1124	1.1
AT–402B	0966 through 1020	1.1
AT–402B	1021 through 1124	1.1
AT–501	0002 through 0061	1.6
AT–501	All serial numbers beginning with 0062	1.6
AT–502	0003 through 0236	1.6
AT–502A	0158 through 0618	1.6
AT–502B	0187 through 0618	1.2

(b) *Who must comply with this AD?* Anyone who wishes to operate any of the above airplanes must comply with this AD.

(c) *What problem does this AD address?* The actions specified by this AD are intended to prevent fatigue cracks from occurring in the wing lower spar cap before the originally-established safe life is reached. Fatigue cracks in the wing lower spar cap, if not detected and corrected, could result in the wing separating from the airplane during flight.

(d) *What must I do to address this problem?* To address this problem, you must accomplish the following actions:

Note 2: The 10-hour time-in-service (TIS) compliance time is maintained from AD 2001–10–04 R1.

Action	Compliance time	Procedures
(1) Modify the applicable aircraft records as follows to show the reduced safe life for the wing lower spar cap (use the information from the table in paragraph (a)(1) of this AD and utilize the information in paragraph (a)(2) of and the Appendix to this AD, as applicable): (i) For the affected Models AT–802 and AT–802A airplanes: update the Owners Manual, Section 6—Airworthiness Limitations, Life Limited Parts. (ii) For all affected airplanes other than the Models AT–802 and AT–802A airplanes: incorporate the following into the Aircraft Logbook ''In accordance with this AD, the wing lower spar cap is life limited to ____ (insert the applicable safe life number from the applicable tables in paragraphs (a)(1) and (a)(2) of this AD). (iii) If, as of the time of the logbook all entry requirement of paragraph (d)(1) of this AD, your airplane is over or within 10 hours of the safe life, an additional 10 hours TIS is allowed to accomplish the replacement/modification	Accomplish the logbook entry within the next 10 hours TIS after the effective date of this AD.	The owner/operator holding at least a private pilot certificate as authorized by section 43.7 of the Federal Aviation Regulations (14 CFR 43.7) may modify the aircraft records as specified in paragraphs (d)(1)(i) and (d)(1(ii) of this AD. Make an entry into the aircraft records showing compliance with this portion of the AD in accordance with section 43.9 of Federal the Aviation Regulations (14 CFR 43.9). Accomplish the actual replacement/modification in accordance with Snow Engineering Service Letter #197, #202, #203, or #205, Revised March 26, 2001, as applicable. The owner/operator may not accomplish the replacement/modification.
(2) If you have ordered parts from the factory when it is time to replace the wing lower spar cap (as required per the logbook safe life reduction in paragraph (d)(1) of this AD), but the parts are not available, you may eddy-current inspect the wing lower spar cap. These inspections are allowed until one of the following occurs, at which time the replacement/modification (required when the lower spar cap has reached its safe life) must be accomplished: (i) Crack(s) is/are found; (ii) Parts become available from the manufacturer; or (iii) Not more than three inspections or 1,200 hours TIS go by: the first inspection would have to be accomplished upon accumulating the safe life; the second inspection would have to be accomplished within 400 hours TIS after accumulating the safe life; the third inspection would have to be accomplished 400 hours TIS after the second inspection; and the replacement/modification would have to be accomplished within 400 hours TIS after the third inspection (maximum elapsed time would be 1,200 hours TIS)	Prior to further flight after ordering the parts and thereafter at intervals not to exceed 400 hours TIS until one of the criteria paragraphs (d)(2)(i), (d)(2)(ii), and (d)(2)(iii) of this AD is met.	In accordance with the procedures in Snow Engineering Service Letter #197, #202, #203, or #205, all Revised March 26, 2001, as applicable.
(3) Eddy-current inspect the wing lower spar cap in order to detect and correct any crack before it extends to the modified center section of the wing and repair that crack or replace the wing section	Immediately prior to the replacement/modification required when you reach the new safe life. For airplanes that had this replacement/modification accomplished in accordance with either AD 2001–10–04 or AD 2001–10–04 R1, accomplish this inspection and any necessary corrective action within the next 400 hours TIS after the effective date of this AD, unless already accomplished (have the mechanic who accomplished the work mark the logbooks accordingly).	In accordance with the procedures in Snow Engineering Service Letter #197, #202, #203, or #205, all Revised March 26, 2001, as applicable.

(e) *Can I comply with this AD in any other way?* (1) You may use an alternative method of compliance or adjust the compliance time if:

(i) Your alternative method of compliance provides an equivalent level of safety; and

(ii) The Manager, Fort Worth or Los Angeles Airplane Certification Office (ACO), as applicable, approves your alternative. Submit your request through an FAA Principal Maintenance Inspector. The inspector may add comments before sending it to the Manager, Fort Worth or Los Angeles ACO.

(2) Alternative methods of compliance approved for AD 2001–10–04 and/or AD 2000–14–51 are not considered approved for this AD.

(3) Alternative methods of compliance approved for AD 2001–10–04 R1 are considered approved for this AD.

Note 3: This AD applies to each airplane identified in paragraphs (a)(1) and (a)(2) of this AD, regardless of whether it has been modified, altered, or repaired in the area subject to the requirements of this AD. For airplanes that have been modified, altered, or repaired so that the performance of the requirements of this AD is affected, the owner/operator must request approval for an alternative method of compliance in accordance with paragraph (e) of this AD. The request should include an assessment of the effect of the modification, alteration, or repair on the unsafe condition addressed by this AD; and, if you have not eliminated the unsafe condition, specific actions you propose to address it.

(f) *Are there any alternative methods of compliance already approved or being considered for this AD?* The FAA may approve, as an alternative method of compliance, inspection of the wing lower spar cap. You must submit the request in accordance with the procedures in paragraph (e) of this AD and adhere to the following:

(1) If you are over or within 10 hours TIS of the safe life for the wing lower spar cap and you have ordered parts and scheduled a date for the replacement/modification, but having the replacement/modification done on this date grounds the airplane, accomplish the following:

(i) Inspect the wing lower spar cap within 10 hours TIS after approval of the alternative method of compliance;

(ii) Reinspect thereafter at intervals not to exceed 400 hours TIS until either cracks are found, the date of the scheduled replacement/modification occurs, or 1,200 hours TIS after the initial inspection are accumulated, whichever occurs first; and

(iii) Accomplish the inspections in accordance with the procedures in Snow Engineering Service Letter #197, #202, #203, or #205, all Revised March 26, 2001, as applicable.

(2) Submit the following to the Fort Worth or Los Angeles ACO, as applicable, using the procedures described in paragraph (e) of this AD:

(i) The airplane model serial number designation, and airplane registration number (N-number);

(ii) The number of hours TIS on the airplane;

(iii) The scheduled date for the replacement/modification; and

(iv) The name and location of the authorized repair shop.

(3) For more information about this issue, contact:

(i) For the airplanes that do not incorporate and never have incorporated Marburger Enterprises, Inc. winglets: Rob Romero, Aerospace Engineer, FAA, Fort Worth Airplane Certification Office, 2601 Meacham Boulevard, Fort Worth, Texas 76193–0150; telephone: (817) 222–5102; facsimile: (817) 222–5960; and

(ii) For the airplanes that incorporate or have incorporated winglets: John Cecil, Aerospace Engineer, Los Angeles Aircraft Certification Office, FAA, 3960 Paramount Boulevard, Lakewood, California, 90712; telephone: (562) 627–5228; facsimile: (562) 627–5210.

(g) *What if I need to fly the airplane to another location to comply with this AD?* The FAA can issue a special flight permit under sections 21.197 and 21.199 of the Federal Aviation Regulations (14 CFR 21.197 and 21.199) to operate your airplane to a location where you can accomplish the requirements of this AD provided that the following is adhered to:

(1) Only operate in day visual flight rules (VFR) only.

(2) Ensure that the hopper is empty.

(3) Limit airspeed to 135 miles per hour (mph) indicated airspeed (IAS).

(4) Avoid any unnecessary g-forces.

(5) Avoid areas of turbulence.

(6) Plan the flight to follow the most direct route.

(h) *How do I get copies of the documents referenced in this AD?* You may get copies of the documents referenced in this AD from Air Tractor, Incorporated, P.O. Box 485, Olney, Texas 76374; or Marburger Enterprises, Inc., 1227 Hillcourt, Williston, North Dakota 58801; telephone: (800) 893–1420 or (701) 774–0230; facsimile: (701) 572–2602. You may view these documents at FAA, Central Region, Office of the Regional Counsel, 901 Locust, Room 506, Kansas City, Missouri 64106.

Appendix to Docket No. 2001–CE–36–AD

The following provides procedures for determining the safe life for those AT–400 and AT–500 series airplanes that incorporate or have incorporated Marburger Enterprises, Inc. winglets. These winglets are installed in accordance with Supplemental Type Certificate (STC) SA00490LA.

1. Review your airplane's logbook to determine your airplane's time in service (TIS) with winglets installed per Marburger Enterprises STC SA00490LA. This includes all time spent with the winglets currently installed and any previous installations where the winglet was installed and later removed.

Example: A review of your airplane's logbook shows that you have accumulated 350 hours TIS since incorporating the Marburger STC. Further review of the airplane's logbook shows that a previous owner had installed the STC and later removed the winglets after accumulating 150 hours TIS. Therefore, your airplane's TIS with the winglets installed is 500 hours.

If you determine that the winglet STC has never been incorporated on your airplane, then your safe life is presented in paragraph (a)(1) of this AD. Any future winglet installation would be subject to a reduced safe life per these instructions.

2. Determine your airplane's unmodified safe life from paragraph (a)(1) of this AD.

Example: Your airplane is a Model AT–502B, serial number 0292. From paragraph (a)(1) of this AD, the safe-life of your airplane is 4,000 hours TIS. All examples from hereon will be based on the Model AT–502B, serial number 0292 airplane.

3. Determine the winglet usage factor from paragraph (a)(2) of this AD.

Example: Again, your airplane is a Model AT–502B, serial number 0292. From paragraph (a)(2) of this AD, your winglet usage factor is 1.2.

4. Adjust the winglet TIS to account for the winglet usage factor. Multiply the winglet TIS (result of 1.) by the winglet usage factor (result of 3.).

Example: Winglet TIS is 500 hours X a winglet usage factor of 1.2. The adjusted winglet TIS is 600 hours.

5. Calculate the winglet usage penalty. Subtract the winglet TIS (result of 1.) from the adjusted winglet TIS (result of 4.).

Example: Adjusted winglet TIS is 600 hours—the winglet TIS of 500 hours. The winglet usage penalty is 100 hours TIS.

6. Adjust the safe life of your airplane to account for winglet usage. Subtract the winglet usage penalty (result of 5.) result from the unmodified safe life from paragraph (a)(1) of this AD (the result of 2.).

Example: The unmodified safe life is 4,000 hours TIS − the 100 hours TIS usage penalty = 3,900 hours TIS adjusted safe life.

7. If you remove the winglets from your airplane prior to further flight or no longer have the winglets installed on your airplane, the safe life of your airplane is the adjusted safe life (result of 6.). Enter this number in paragraph (d)(1) of this AD and the airplane logbook.

8. If you keep the current winglet installation on your airplane, you must further reduce the safe life by dividing the adjusted safe life (result of 6.) by the winglet usage factor (result of 3.). Record this result in your airplane's logbook.

Example: Adjusted safe life is 3,900 hours ÷ winglet usage factor of 1.2 = 3,250 hours TIS.

9. If, at anytime in the future, you install or remove the Marburger winglet STC from your airplane, you must repeat the procedures in this Appendix.

Issued in Kansas City, Missouri, on December 17, 2001.

Michael Gallagher,

Manager, Small Airplane Directorate, Aircraft Certification Service.

[FR Doc. 01–31555 Filed 12–26–01; 8:45 am]

BILLING CODE 4910–13–P

DEPARTMENT OF TRANSPORTATION

Federal Aviation Administration

14 CFR Part 39

[Docket No. 2001–CE–47–AD]

RIN 2120–AA64

Airworthiness Directives; Fairchild Aircraft, Inc. Models SA226 and SA227 Series Airplanes

AGENCY: Federal Aviation Administration, DOT.

ACTION: Notice of proposed rulemaking (NPRM).

SUMMARY: This document proposes to supersede Airworthiness Directive (AD)

2001–20–14, which currently requires you to replace the brake shuttle valves with parts of improved design and install a shield over the hydraulic lines on certain Fairchild Aircraft SA226 and SA227 series airplanes. AD 2001–20–14 also requires you to replace the rubber fuel hose with a metal device for certain SA226 series airplanes. AD 2001–20–14 resulted from a report of a wheel brake system malfunction caused by a faulty brake shuttle valve. The FAA incorrectly referenced Model SA226–T(A) airplanes and inadvertently omitted certain serial numbers of Model SA227–AC airplanes from AD 2001–20–14. This proposed AD would retain the actions of AD 2001–20–14, correct the reference of Model SA226–T(A) airplanes, and would add additional Model SA227–AC airplanes to the Applicability section of the AD. The actions specified by this proposed AD are intended to correct potential brake shuttle valve problems, which could cause the brake assembly to drag and overheat. Hydraulic or fuel line damage could then occur if the overheated brake assembly is retracted into the main wheel well with a consequent fire if the hydraulic or fuel lines ruptured.

DATES: The Federal Aviation Administration (FAA) must receive any comments on this proposed rule on or before February 19, 2002 .

ADDRESSES: Submit comments to FAA, Central Region, Office of the Regional Counsel, Attention: Rules Docket No. 2001–CE–47–AD, 901 Locust, Room 506, Kansas City, Missouri 64106. You may view any comments at this location between 8 a.m. and 4 p.m., Monday through Friday, except Federal holidays.

You may get service information that applies to this proposed AD from Fairchild Aircraft, Inc., P.O. Box 790490, San Antonio, Texas 78279–0490; telephone: (210) 824–9421; facsimile: (210) 820–8609. You may also view this information at the Rules Docket at the address above.

FOR FURTHER INFORMATION CONTACT: Werner Koch, Aerospace Engineer, FAA, Airplane Certification Office, 2601 Meacham Boulevard, Fort Worth, Texas 76193–0150; telephone: (817) 222–5133; facsimile: (817) 222–5960.

SUPPLEMENTARY INFORMATION:

Comments Invited

How do I comment on this proposed AD? The FAA invites comments on this proposed rule. You may submit whatever written data, views, or arguments you choose. You need to include the rule's docket number and submit your comments to the address specified under the caption **ADDRESSES.** We will consider all comments received on or before the closing date. We may amend this proposed rule in light of comments received. Factual information that supports your ideas and suggestions is extremely helpful in evaluating the effectiveness of this proposed AD action and determining whether we need to take additional rulemaking action.

Are there any specific portions of this proposed AD I should pay attention to? The FAA specifically invites comments on the overall regulatory, economic, environmental, and energy aspects of this proposed rule that might suggest a need to modify the rule. You may view all comments we receive before and after the closing date of the rule in the Rules Docket. We will file a report in the Rules Docket that summarizes each contact we have with the public that concerns the substantive parts of this proposed AD.

How can I be sure FAA receives my comment? If you want FAA to acknowledge the receipt of your comments, you must include a self-addressed, stamped postcard. On the postcard, write ''Comments to Docket No. 2001–CE–47–AD.'' We will date stamp and mail the postcard back to you.

Discussion

Has FAA taken any action to this point? The FAA received a report of an accident involving a Fairchild Model SA226–TC airplane where the flight crew lost control of the airplane at low altitude during the final approach for landing. Prior to the accident, the flight crew reported a loss of hydraulic pressure and a fire on the left side of the airplane. The report of this accident caused us to issue AD 2001–20–14, Amendment 39–12462 (66 FR 52020, October 12, 2001). This AD requires the following on certain Fairchild Aircraft SA226 and SA227 series airplanes:

—Replace the brake shuttle valves with parts of improved design (except on airplanes with an anti-skid/power brake system);

—Install a shield over the hydraulic lines; and

—Replace the rubber fuel hose with a metal device on certain SA226 series airplanes.

What has happened since AD 2001–20–14 to initiate this action? The FAA incorrectly referenced Model SA226–T(A) airplanes and inadvertently omitted certain serial numbers of Model SA227–AC airplanes from the applicability of AD 2001–20–14. In particular, we referenced serial numbers T(A)249 through T(A)291 as Model SA226–T(A) airplanes. These serial numbers should be T249 through T291, except T276, as Model SA226–T airplanes. We also restricted the applicability of Model SA227–AC airplanes to serial numbers AC406, AC415, AC416, and AC420 through AC599. Any Model SA227–AC airplane incorporating a serial number from AC600 through AC789 should also be affected by the actions of AD 2001–20–14.

Accomplishment of the actions as specified in AD 2001–20–14 is required in accordance with the following documents:

—Fairchild Aircraft Service Bulletin No. 226–26–003, which applies to certain SA226 series airplanes and incorporates the following pages:

Pages	Date
16	Issued: March 1, 2000.
14, 15	Issued: March 1, 2000, Revised: June 27, 2000.
17	Issued: March 1, 2000, Revised: October 2, 2000.
4, 5, 6, 7, 10, 11, 12, and 13.	Issued: March 1, 2000, Revised: January 19, 2001.
1, 2, 3, 8, and 9.	Issued: March 1, 2000, Revised: August 10, 2001 and

—Fairchild Aircraft Service Bulletin No. 227–26–002, which applies to certain SA227 series airplanes and incorporates the following pages:

Pages	Date
1, 2, 8, and 9.	Issued: March 1, 2000.
7	Issued: March 1, 2000, Revised: June 27, 2000.
3, 4, 5, and 6.	Issued: March 1, 2000, Revised: October 2, 2000.

What are the provisions of these service bulletins? These service bulletins include procedures for:

—Replacing each brake shuttle valve with a part number (P/N) MS28767–4 brake shuttle valve;

—Replacing the rubber fuel hose with a metal device; and

—Installing a shield over the hydraulic lines.

The FAA's Determination and an Explanation of the Provisions of This Proposed AD

What has FAA decided? After examining the circumstances and reviewing all available information related to the incidents described above, we have determined that:

—The unsafe condition referenced in this document exists or could develop on other certain Fairchild Aircraft

SA226 and SA227 series airplanes of the same type design;

—The actions specified in the previously-referenced service information should be accomplished on the affected airplanes; and

—AD action should be taken in order to correct this unsafe condition.

What would this proposed AD require? This proposed AD would supersede AD 2001–20–14 with a new AD that would retain the actions of AD 2001–20–14, correct the reference to Model SA226–T(A) airplanes, and would include additional Model SA227–AC airplanes in the Applicability section of the AD.

Cost Impact

How many airplanes would this proposed AD impact? We estimate that this proposed AD affects 186 SA226 Series airplanes and 72 SA227 Series airplanes in the U.S. registry for total of 258 affected airplanes.

What would be the cost impact of this proposed AD on owners/operators of the affected airplanes? We estimate the following costs to accomplish the proposed replacement and installation:

SA226 SERIES AIRPLANES

Labor cost	Parts cost	Total cost per airplane	Total cost on U.S. operators
65 workhours × $60 per hour = $3,900	$3,431	$7,331	$7,331 × 186 = $1,363,566.

SA227 SERIES AIRPLANES

Labor cost	Parts cost	Total cost per airplane	Total cost on U.S. operators
55 workhours × $60	$1,369 per hour = $3,300.	$4,669	$4,669 × 72 = $336,168.

The only difference between AD 2001–20–14 and this proposed AD is the expanded applicability of Model SA227–AC airplanes that we inadvertently omitted from the

''Applicability'' section of AD 2001–20–14. However, the estimated number of total airplanes affected has not changed. The only impact this proposed AD would have over that already required by AD 2001–20–14 is the burden to the owners/operators of the cost of the proposed actions on the additional airplanes.

Compliance Time of this Proposed AD

What would be the compliance time of this proposed AD? The compliance time of this proposed AD is at whichever of the following that occurs later:

—Within 500 hours time-in-service (TIS) after the effective date of this AD or AD 2001–20–14, as applicable; or

—Within 6 months after the effective date of this AD or AD 2001–20–14, as applicable.

Why is the compliance time of the proposed AD presented in both hours TIS and calendar time? The affected airplanes are used in both general aviation and commuter operations. Those commuter operators may accumulate 500 hours TIS on the airplane in less than 2 months and many owners have numerous affected airplanes in their fleets. We have determined that the dual compliance time:

—gives all owners/operators of the affected airplanes adequate time to schedule and accomplish the actions in this proposed AD; and

—assures that the unsafe condition referenced in this AD will be corrected within a reasonable time period without inadvertently grounding any of the affected airplanes.

Regulatory Impact

Would this proposed AD impact various entities? The regulations proposed herein would not have a substantial direct effect on the States, on the relationship between the national government and the States, or on the distribution of power and responsibilities among the various levels of government. Therefore, it is determined that this proposed rule would not have federalism implications under Executive Order 13132.

Would this proposed AD involve a significant rule or regulatory action? For the reasons discussed above, I certify that this proposed action (1) is not a ''significant regulatory action'' under Executive Order 12866; (2) is not a ''significant rule'' under DOT Regulatory Policies and Procedures (44 FR 11034, February 26, 1979); and (3) if promulgated, will not have a significant economic impact, positive or negative, on a substantial number of small entities under the criteria of the Regulatory Flexibility Act. A copy of the draft regulatory evaluation prepared for this action has been placed in the Rules Docket. A copy of it may be obtained by contacting the Rules Docket at the location provided under the caption **ADDRESSES.**

List of Subjects in 14 CFR Part 39

Air transportation, Aircraft, Aviation safety, Safety.

The Proposed Amendment

Accordingly, under the authority delegated to me by the Administrator, the Federal Aviation Administration proposes to amend part 39 of the Federal Aviation Regulations(14 CFR part 39) as follows:

PART 39—AIRWORTHINESS DIRECTIVES

1. The authority citation for part 39 continues to read as follows:

Authority: 49 U.S.C. 106(g), 40113, 44701.

§ 39.13 [Amended]

2. FAA amends § 39.13 by removing Airworthiness Directive (AD) 2001–20–14, Amendment 39–12462 (66 FR 52020, October 12, 2001), and by adding a new AD to read as follows:

Fairchild Aircraft, Inc.: Docket No. 2001–CE–47–AD; Supersedes AD 2001–20–14, Amendment 39–12462.

(a) *What airplanes are affected by this AD?* This AD affects the following airplane models and serial numbers that are certificated in any category:

(1) Group 1: Fairchild Aircraft Inc. airplanes retained from AD 2001–20–14:

Model	Serial Nos.
SA226–AT	AT001 through AT074.
SA226–T	T201 through T291, except T276.
SA226–T(B)	T(B) 276 and T(B) 292 through T(B) 417.
SA226–TC	TC201 through TC419.

Model	Serial Nos.
SA227–AC	AC406, AC415, AC416, and AC420 through AC599.
SA227–AT	AT421, AT423 through AT631, and AT695.
SA227–TT	TT421 through TT555.
SA227–TT(300)	TT447, TT465, TT471, TT483, TT512, TT518, TT521, TT527, TT529, and 536.

(2) Group 2: Fairchild Aircraft, Inc. airplanes added to the applicability of this AD (not included in AD 2001–20–14):

Model	Serial Nos.
SA227–AC	AC600 through AC789.

(b) *Who must comply with this AD?* Anyone who wishes to operate any of the above airplanes must comply with this AD. The AD applies to any airplane with or without an anti-skid/power brake system installed.

(c) *What problem does this AD address?* The actions specified by this AD are intended to correct potential brake shuttle valve problems, which could cause the brake assembly to drag and overheat. Hydraulic or fuel line damage could then occur if the overheated brake assembly is retracted into the main wheel well, with a consequent fire if the hydraulic or fuel lines ruptured.

(d) *What actions must I accomplish to address this problem for Group 1 airplanes?* To address this problem for Group 1 airplanes, you must accomplish the following:

Actions	Compliance	Procedures
(1) For all affected airplanes, except those equipped with an anti-skid/power brake system, replace each brake shuttle valve with part number (P/N) MS28767–4 brake shuttle valve (or FAA-approved equivalent part number).	Within 500 hours time-in-service (TIS) after November 21, 2001 (the effective date of AD 2001–20–14), or within 6 months after November 21, 2001 (the effective date of AD 2001–20–14), whichever occurs later.	In accordance with the ACCOMPLISHMENT INSTRUCTIONS section of Fairchild Aircraft Service Bulletin No. 226–26–003, or Fairchild Aircraft Service Bulletin No. 227–26–002, as applicable.
(2) For all affected airplanes, install a shield over the hydraulic lines.	Within 500 hours time-in-service (TIS) after November 21, 2001 (the effective date of AD 2001–20–14), or within 6 months after November 21, 2001 (the effective date of AD 2001–20–14), whichever occurs later.	In accordance with the ACCOMPLISHMENT INSTRUCTIONS section of Fairchild Aircraft Service Bulletin No. 226–26–003, or Fairchild Aircraft Service Bulletin No. 227–26–002, as applicable.
(3) For all airplane models within the SA226 series replace the rubber fuel hose with a metal device.	Within 500 hours time-in-service (TIS) after November 21, 2001 (the effective date of AD 2001–20–14), or within 6 months after November 21, 2001 (the effective date of AD 2001–20–14), whichever occurs later.	In accordance with the ACCOMPLISHMENT INSTRUCTIONS section of Fairchild Aircraft Service Bulletin No. 226–26–003.
(4) Do not install any brake shuttle valve that is not a P/N MS28767–4 brake shuttle valve (or FAA-approved equivalent part number) or a fuel hose that is made out of rubber.	As of November 21, 2001 (the effective date of AD 2001–20–14).	Not Applicable.

(e) *What actions must I accomplish to address this problem for Group 2 airplanes?* To address this problem for Group 2 airplanes, you must accomplish the following:

Actions	Compliance	Procedures
(1) For all affected airplanes except those equipped with an anti-skid/power brake system, replace each brake shuttle valve with part number (P/N) MS28767–4 brake shuttle valve (or FAA-approved equivalent part number).	Within 500 hours time-in service (TIS) after the effective date of this AD or within 6 months after the effective date of this AD, whichever occurs later.	In accordance with the ACCOMPLISHMENT INSTRUCTIONS section of Fairchild Aircraft Service Bulletin No. 227–26–002.
(2) For all affected airplanes, install a shield over the hydraulic lines.	Within 500 hours time-in-service (TIS) after the effective date of this AD or within 6 months after the effective date of this AD, whichever occurs later.	In accordance with the ACCOMPLISHMENT INSTRUCTIONS section of Fairchild Aircraft Service Bulletin No. 227–26–002.
(3) Do not install any brake shuttle valve that is not a P/N MS28767–4 brake shuttle valve (or FAA-approved equivalent part number) or a fuel hose that is made out of rubber.	As of the effective date of this AD	Not Applicable.

(f) *What revision levels do the affected service bulletins currently incorporate?* The service bulletins required to accomplish these actions incorporate the following pages:

(1) Fairchild Aircraft Service Bulletin No. 226–26–003:

Affected pages	Revision level	Date
16	Original Issue	March 1, 2000.
14, 15	Revision 1	June 27, 2000.
17	Revision 2	October 2, 2000.
4, 5, 6, 7, 10, 11, 12, and 13	Revision 3	January 19, 2001.
1, 2, 3, 8, and 9	Revision 4	August 10, 2001.

(2) Fairchild Aircraft Service Bulletin No. 227–26–002:

Affected pages	Revision Level	Date
1, 2, 8, and 9	Original Issue	March 1, 2000.
7	Revision 1	June 27, 2000.
3, 4, 5, and 6	Revision 2	October 2, 2000.

(g) *Can I comply with this AD in any other way?* (1) You may use an alternative method of compliance or adjust the compliance time if:

(i) Your alternative method of compliance provides an equivalent level of safety; and

(ii) The Manager, Fort Worth Airplane Certification Office (ACO), approves your alternative. Submit your request through an FAA Principal Maintenance Inspector, who may add comments and then send it to the Manager, Fort Worth ACO.

(2) Alternative methods of compliance approved in accordance with AD 2001–20–14, which is superseded by this AD, are approved as alternative methods of compliance with this AD.

Note: This AD applies to each airplane identified in paragraph (a) of this AD, regardless of whether it has been modified, altered, or repaired in the area subject to the requirements of this AD. For airplanes that have been modified, altered, or repaired so that the performance of the requirements of this AD is affected, the owner/operator must request approval for an alternative method of compliance in accordance with paragraph (g) of this AD. The request should include an assessment of the effect of the modification, alteration, or repair on the unsafe condition addressed by this AD; and, if you have not eliminated the unsafe condition, specific actions you propose to address it.

(h) *Where can I get information about any already-approved alternative methods of compliance?* Contact Werner Koch, Aerospace Engineer, FAA, Airplane Certification Office, 2601 Meacham Boulevard, Fort Worth, Texas 76193–0150; telephone: (817) 222–5133; facsimile: (817) 222–5960.

(i) *What if I need to fly the airplane to another location to comply with this AD?* The FAA can issue a special flight permit under sections 21.197 and 21.199 of the Federal Aviation Regulations (14 CFR 21.197 and 21.199) to operate your airplane to a location where you can accomplish the requirements of this AD.

(j) *How do I get copies of the documents referenced in this AD?* You may get copies of the documents referenced in this AD from Fairchild Aircraft, Inc., P.O. Box 790490, San Antonio, Texas 78279–0490. You may view these documents at FAA, Central Region, Office of the Regional Counsel, 901 Locust, Room 506, Kansas City, Missouri 64106.

(k) *Does this AD action affect any existing AD actions?* This amendment supersedes AD 2001–20–14, Amendment 39–12462.

Issued in Kansas City, Missouri, on December 14, 2001.

Dorenda D. Baker,

Acting Manager, Small Airplane Directorate, Aircraft Certification Service.

[FR Doc. 01–31554 Filed 12–26–01; 8:45 am]

BILLING CODE 4910–13–P

DEPARTMENT OF TRANSPORTATION

Federal Aviation Administration

14 CFR Part 71

[Airspace Docket No. 01–ASO–18]

Proposed Establishment of Class E5 Airspace, Andrews, SC

AGENCY: Federal Aviation Administration (FAA), DOT.

ACTION: Notice of proposed rulemaking.

SUMMARY: This action proposes to establish Class E5 airspace at Andrews, SC. A Non-Directional Beacon (NDB) Runway (RWY) 36 Standard Instrument Approach Procedure (SIAP) has been developed for Robert F. Swinnie Airport, Andrews SC. As a result, controlled airspace extending upward from 700 feet Above Ground Level (AGL) is needed to contain the SIAP and other Instrument Flight Rules (IFR) operations at Robert F. Swinnie Airport. The operating status of the airport would change from Visual Flight Rules (VFR) to include IFR operations concurrent with the publication of the SIAP.

DATES: Comments must be received on or before January 28, 2002.

ADDRESSES: Send comments on the proposal in triplicate to: Federal Aviation Administration, Docket No. 01–ASO–18, Manager, Airspace Branch, ASO–520, P.O. Box 20636, Atlanta, Georgia 30320.

The official docket may be examined in the Office of the Regional Counsel for Southern Region, Room 550, 1701 Columbia Avenue, College Park, Georgia 30337, telephone (404) 305–5586.

FOR FURTHER INFORMATION CONTACT: Walter R. Cochran, Manager, Airspace Branch, Air Traffic Division, Federal Aviation Administration, P.O. Box 20636, Atlanta, Georgia 30320; telephone (404) 305–5586.

SUPPLEMENTARY INFORMATION:

Comments Invited

Interested parties are invited to participate in this proposed rulemaking by submitting such written data, views or arguments as they may desire. Comments that provide the factual basis supporting the views and suggestions presented are particularly helpful in developing reasoned regulatory decisions on the proposal. Comments are specifically invited on the overall regulatory, aeronautical, economic, environmental, and energy-related aspects of the proposal. Communications should identify the airspace docket number and be submitted in triplicate to the address listed above. Commenters wishing the FAA to acknowledge receipt of their comments on this action must submit with those comments a self-addressed, stamped postcard on which the following statement is made: ''Comments to Airspace Docket No. 01–ASO–18.'' The postcard will be date/time stamped and returned to the commenter. All communications received before the specified closing date for comments will be considered before taking action on the proposed rule. The proposal contained in this action may be changed in light of the comments received. All comments submitted will be available for examination in the Office of the Regional Counsel for Southern Region, Room 55, 1701 Columbia Avenue, College Park, Georgia 30337, both before and after the closing date for comments. A report summarizing each substantive public contact with FAA personnel concerned with this rulemaking will be filed in the docket.

Availability of NPRMs

Any person may obtain a copy of this Notice of Proposed Rulemaking (NPRM) by submitting a request to the Federal Aviation Administration, Manager, Airspace Branch, ASO–520, Air Traffic Division, P.O. Box 20636, Atlanta, Georgia 30320. Communications must identify the docket number of this NPRM. Persons interested in being placed on a mailing list for future NPRM's should also request a copy of Advisory Circular No. 11–2A which describes the application procedure.

The Proposal

The FAA is considering an amendment of Part 71 of the Federal Aviation Regulations (14 CFR part 71) to establish Class E5 airspace at Andrews, SC. Class E airspace designations for airspace areas extending upward from 700 feet or more above the surface of the earth are published in Paragraph 6005 of FAA Order 7400.9J, dated August 31, 2001, and effective September 16, 2001, which is incorporated by reference in 14

CFR 71.1. The Class E airspace designation listed in this document would be published subsequently in the Order.

The FAA has determined that this proposed regulation only involves an established body of technical regulations for which frequent and routine amendments are necessary to keep them operationally current. It, therefore, (1) is not a ''significant regulatory action'' under Executive Order 12866; (2) is not a ''significant rule'' under DOT Regulatory Policies and Procedures (44 FR 11034; February 26, 1979); and (3) does not warrant preparation of a Regulatory Evaluation as the anticipated impact is so minimal. Since this is a routine matter that will only affect air traffic procedures and air navigation, it is certified that this rule, when promulgated, will not have a significant economic impact on a substantial number of small entities under the criteria of the Regulatory Flexibility Act.

List of Subjects in 14 CFR Part 71

Airspace, Incorporation by reference, Navigation (air).

The Proposed Amendment

In consideration of the foregoing, the Federal Aviation Administration proposes to amend 14 CFR Part 71 as follows:

PART 71—DESIGNATION OF CLASS A, CLASS B, CLASS C, CLASS D, AND CLASS E AIRSPACE AREAS; AIRWAYS; ROUTES; AND REPORTING POINTS

1. The authority citation for part 71 continues to read as follows:

Authority: 49 U.S.C. 106(g); 40103, 40113, 40120; E.O. 10854, 24 FR 9565, 3 CFR, 1959–1963 Comp., p. 389.

§ 71.1 [Amended]

2. The incorporation by reference in 14 CFR 71.1 of Federal Aviation Administration Order 7400.9J, Airspace Designations and Reporting Points, dated August 31, 2001, and effective September 16, 2001, is amended as follows:

Paragraph 6005 Class E Airspace Areas Extending Upward From 700 Feet or More Above the Surface of the Earth.

* * * * *

ASO SC E5 Andrews, SC [NEW]

Robert F. Swinnie Airport, SC
(Lat. 33°27′06″N, long. 79°31′34″W)
Andrews NDB
(Lat. 33°27′05''N, long. 79°31′38″W)

That airspace extending upward from 700 feet above the surface within a 6.3—mile radius of Robert F. Swinnie Airport and within 4 miles east and 8 miles west of the 174° bearing from the Andrews NDB extending from the 6.3—mile radius to 16 miles south of the airport, excluding that airspace within the Georgetown, SC, Class E airspace area.

* * * * *

Issued in College Park, Georgia, on December 18, 2001.

Wade T. Carpenter,

Acting Manager, Air Traffic Division, Southern Region.

[FR Doc. 01–31726 Filed 12–26–01; 8:45 am]

BILLING CODE 4910–13–M

DEPARTMENT OF TRANSPORTATION

Office of the Secretary

14 CFR Part 234

[Docket No. OST 2000–8164]

RIN 2139–AA09

Reporting the Causes of Airline Delays and Cancellations

AGENCY: Office of Secretary, DOT.

ACTION: Notice of proposed rulemaking (NPRM).

SUMMARY: As required by Federal statute, the Department of Transportation is considering modifying the reporting requirements regarding air carriers' quality of services. We are proposing requiring air carriers that file airline service quality performance reports under the regulations to collect and report the causes of airline delays and cancellations. Currently, there is a lack of data on the specific causes of airline delays and cancellations. The proposed changes are designed to fill the data gaps for airline delays and cancellations and provide this information to the public and other interested parties.

DATES: Comment Deadline: February 25, 2002.

ADDRESSES: Written, signed comments containing the docket number that appears in the heading of this document can be sent to: Docket Clerk, US DOT Dockets, Room PL–401, 400 Seventh Street SW., Washington DC 20590–0001. All comments will be available for examination at the above address from 9 a.m. to 5 p.m., Monday through Friday, except Federal holidays. If you would like notification that we have received your comment, please include a self addressed stamped envelop or postcard.

FOR FURTHER INFORMATION CONTACT: Bernard Stankus or Clay Moritz, Office of Airline Information, K–25, Bureau of Transportation Statistics, Department of Transportation, 400 Seventh Street, SW., Washington, DC, 20590–0001, (202) 366–4387 or 366–4385, respectively. You can also contact them by e-mail at bernard.stankus@bts.gov or clay.moritz@bts.gov or by fax at (202) 366–3383.

SUPPLEMENTARY INFORMATION:

Electronic Access

An electronic copy of this document may be downloaded by using a computer, modem, and suitable communications software from the Government Printing Office's Electronic Bulletin Board Services at (202) 512–1661. Internet users may reach the Office of the Federal Register's home page at: *http://www.nara.gov/fedreg* and the Government Printing Office's database at: *http://www.access.gpo.gov/nara*. You can also view and download this document by going to the webpage of the Department's Docket Management System (*http://dms.dot.gov/*). On that page, click on ''search.'' On the next page, type the last four digits of the docket number shown in the heading of this document. Then click on ''search.''

Background

Section 227 of the Wendell H. Ford Aviation Investment and Reform Act for the 21st Century (AIR–21) requires that we modify our airline data collection system, 14 CFR Part 234—Airline Service Quality Performance Reports, to explain more fully to the public the nature and source of airline delays and cancellations (See Pub. L. 106–181, 114 Stat. 61). AIR–21 also directed that DOT establish a Task Force to review airline delays and cancellations and develop recommendations for the associated reporting criteria. Since the passage of AIR–21, Congress has continued to express concern that DOT needs more accurate data to better understand gate, tarmac and airborne delays. The DOT Office of the Inspector General (OIG) also highlighted the need to examine airline delays and cancellations in its July 25, 2000 report on air carrier flight delays and cancellations. Our own consumer complaint statistics also support regulatory action in this area.

In August 2000, we formed the Air Carrier On-Time Reporting Advisory Committee (the Task Force). The Task Force members were chosen to reflect a balanced cross section of interests. In addition to government representatives, they included representatives from consumer airline groups, air carriers, labor unions and airport operators. On September 25, 2000, the Task Force was chartered as a Federal advisory committee. Its mission was to consider

changes to the current on-time reporting system so that the public would have clear information about the nature and sources of airline delays and cancellations.

In the Fall of 2000 (*i.e.,* October 25 and 26, November 1 and 2, and November 13), the Task Force held several meetings to identify the issues surrounding airline delays and cancellations and to develop reporting criteria. The meetings were announced in the **Federal Register** (65 FR 63285) and were open to the public. We opened a public docket for submission of comments, Docket OST–2000–8164. On November 29, 2000, the Task Force submitted its report to DOT. The Task Force made a number of recommendations, including that we establish a reporting framework for collecting information about the causes of airline delays and cancellations. The Task Force also recommended that, prior to rulemaking, we conduct a pilot program to test the proposed reporting categories. Following up on that recommendation, we contacted a number of air carriers; four air carriers agreed to participate in a voluntary pilot project. The four carriers were American Airlines, Delta Air Lines, Southwest Airlines and United Airlines. Over the past seven months, we met with the four carriers and discussed what causal delay and cancellation information should be collected and how best to report that delay and cancellation data. After the parties agreed on a reporting framework, the carriers began submitting delay and cancellation data to us.

We have used the recommendations from the Task Force, the results of our pilot project and our outreach efforts to form the proposals contained in this NPRM.

Scope of Proposed Rulemaking

We are proposing to amend 14 CFR Part 234 to require that air carriers report the causes of airline delays and cancellations. We are proposing that this new reporting requirement apply only to those air carriers that are already reporting under part 234. Under part 234, a reporting carrier is an air carrier that holds a certificate under 49 U.S.C. 41102 and that accounted for at least one percent of domestic scheduled passenger revenues in the 12 months ending March 31 of each year. We believe that this proposal will provide those air carriers in a position to quickly adopt the new reporting system, that opportunity, but it also would provide a transition period to those air carriers who may face technological obstacles. In taking this approach, we believe that the proposal minimizes the regulatory burden on the industry and yet, provides valuable information to the public.

We are proposing this phased regulatory approach, based on a Task Force recommendation that, after an assessment of the reporting burdens, we consider applying the new reporting requirements to other major and national air carriers and the code-share partners of major carriers. In order to evaluate the Task Force's recommendation on expanding the part 234 reporting requirements to other major and national air carriers and the code-share partners of major carriers and to announce the results of the delay-reporting pilot project, we conducted several outreach efforts with industry representatives.

During an August 10, 2001 meeting with air carriers already reporting under Part 234, several airline representatives indicated that non-reporting airlines would face significant start-up costs, including software changes and computer hardware upgrades. Several representatives voiced the opinion that the non-reporting carriers would face a difficult and lengthy transition period and, from a technological standpoint, were not in a position to comply with the Part 234 reporting requirements in the near term.

During the previous Task Force meetings, the Air Carrier Association of America indicated that expanding the Part 234 reporting requirements to its members would result in each carrier facing additional annual costs of $25,000 to $100,000. The Regional Airline Association also indicated that expanding the reporting requirements to its members would have a significant impact on resources, personnel, and operations. It did not provide, however, an actual cost estimate for its members to report on-time data.

We have reviewed domestic enplanement data. Domestic enplanements include all enplanements for scheduled service operations between two U.S. points. For 2000, the data showed that the 12 air carriers currently reporting under Part 234 accounted for approximately 83% of the domestic passenger enplanements. We also examined the data for ''code-sharing partners.'' Airlines use two-character designator codes to identify themselves in the computer reservation systems. Code-sharing is an arrangement whereby one carrier's designator code is used to identify a flight operated by another carrier. The 2000 data showed that the reporting carrier's code-share partners accounted for approximately 9% of the enplanements. There are also other major and national air carriers that are not code-sharing partners and the enplanement data indicates they handled approximately 5% of the domestic enplanements.

We reviewed data for medium and large regional air carriers. We defined medium and large regional air carriers as those carriers that provide passenger service with aircraft having a passenger capacity of 61 seats or more. Medium regional air carriers have annual operating revenue of $20 million or less. Large regional carriers have annual operating revenue of more than $20 million but less than $100 million. The 42 medium and regional air carriers handled approximately 2% of the domestic enplanements.

We also reviewed data for small air carriers. One definition of small carriers is those certificated or commuter air carriers that do not provide code-share service for a major air carrier, but do provide passenger service with aircraft having passenger capacity of 60 seats or fewer. For our regulatory purposes, the Small Business Administration defines an air carrier as a small business if it has 1500 or fewer employees. We estimate there are approximately 80–90 small air carriers. The 2000 data showed that small carriers accounted for only 1% of the enplanements.

Based on the our review and the feedback we received concerning cost, resource considerations, and the time to implement a reporting system, we are limiting the scope of the NPRM. Based on the small number of enplanements handled by small air carriers, medium and large regional air carriers, and the potential burdens and costs faced by these carriers that are not now required to submit on-time flight performance reports, the NPRM excludes these carriers from the on-time reporting requirements. This decision is being made in recognition of the amount of time and expense required to implement a reporting system as well as the additional potential resource burdens associated with reporting. We are therefore not proposing, at this time, to include code-share partners and other major/national carriers in the Part 234 reporting system. We believe that based on the feedback gathered during the pilot project, we need additional time to examine and estimate the potential burdens. Instead, the inclusion of code-share partners and other major/national carriers in the Part 234 reporting system will be the subject of a future rulemaking.

We recognize that our proposal would not include approximately 17% of the enplanement data in the reporting system and thus, potentially affect the

utility of the information available to the public. Accordingly, we are inviting comments on what should be the proper time frame to include the remaining major carriers as well as the national carriers, and the reporting carriers' code-share partners in the part 234 reporting requirements. We are also seeking cost estimates from air carriers on our proposal and input from members of the public on whether they would benefit from expanding the part 234 reporting requirements. After reviewing all the comments, we will determine whether the proposed scope of the rulemaking is appropriate.

Causal Categories and Methodology

By requiring air carriers to report the causes of delays and cancellations, we hope to address two important air transportation issues: (1) identify the causes of flight delays and cancellations for future corrective action and (2) alleviate some of the frustration and anger that airline passengers have expressed concerning delayed and cancelled flights.

The primary purpose for collecting causal data is to categorize delays and cancellations so that system problems can be identified and the appropriate parties can take corrective action. Based on the Task Force's recommendations and our work in the pilot program, we are proposing four categories for reporting delays: (1) Air carrier, (2) extreme weather, (3) National Aviation System (NAS), and (4) late arriving aircraft; and three categories for reporting cancellations: (1) Air carrier, (2) extreme weather, and (3) the NAS.

Air Carrier Delays or Cancellations

Below is a list of examples of causes for delays and cancellations that we believe are within the control of the air carrier. This list should be used as a guide for the type of occurrences that should be reported as an air carrier delay and/or cancellation. It should not be considered a complete list and we welcome comments on additions or deletions.

Aircraft cleaning, Aircraft damage, Awaiting the arrival of connecting passengers or crew, Baggage, Bird strike, Cargo loading, Catering, Computer, outage—carrier equipment, Crew legality (pilot or attendant rest), Damage by hazardous goods, Engineering Inspection, Fueling, Handling disabled passengers, Late Crew, Lavatory Servicing, Maintenance, Oversales, Potable Water Servicing, Removal of unruly passenger, Slow boarding or seating, Stowing carry-on baggage, Weight and balance delays.

During the pilot program, bird strikes were coded as an air carrier caused delay and/or cancellation. Although air carriers generally cannot prevent bird strikes, they are in the best position to take corrective action by having spare aircraft or by repairing damaged parts. However, during our meetings with industry representatives, other carriers, who did not participate in the pilot program, questioned whether this coding designation is the appropriate way to report bird strikes. We request comments on the appropriate coding designation for bird strikes.

Extreme Weather

Extreme weather delays or cancellations are caused by weather conditions (*e.g.,* significant meteorological conditions), actual or forecasted at the point of departure, en route, or point of arrival that, in accordance with applicable regulatory standards and/or in the judgment of the air carrier, prevents operation of that flight and/or prevents operations of subsequent flights due to the intended aircraft being out of position as a result of a prior delay or cancellation attributable to weather.

National Aviation System (NAS)

Delays and cancellations attributable to NAS refer to a broad set of conditions: weather-non extreme, airport security, airport operations, heavy traffic volume, air traffic control, etc. Recent Congressional legislation will transition passenger screening and other security responsibilities from the air carriers to the Department of Transportation.

Using the available internal data, the FAA will review the delays reported by the air carriers in the NAS category to identify the actual causes of the delays. As stated earlier, air carriers track delays up to the time the aircraft pushes away from the departure gate. Delays that occur after ''push-back'' are generally assigned to the NAS category. The FAA has various data sets, which would be used to identify delays after ''push-back.'' One of these data sets is FAA's Air Traffic Operations Network (OPSNET) information. This data set provides information on delays incurred by aircraft while under the control of the air traffic system.

In addition, the National Oceanic and Atmospheric Administration provides the FAA with weather information. Airport operators provide the FAA with information on runway closures and other airport incidents. With these data sets, the FAA has the capability to refine the NAS delays into weather-non extreme, volume, equipment outages, runway closures, other or ''no match.''

Volume delays are those delays that occur because the amount of air traffic exceeds the airport's capacity. These delays or cancellations are assigned to NAS rather than to the air carriers because the heavy traffic volume generally consists of flights from a multitude of carriers. Consistent high volume delays are an indication to airport operators and to state and local governments that there is a need for infrastructure investments and improvements. Equipment outages are failures that involve FAA equipment and do not involve the air carrier's equipment. A ''no match'' means there was a NAS delay reported, but FAA found nothing in its tracking system that would account for a NAS delay.

Late Arriving Aircraft

Consumers have an interest in knowing if particular flights are consistently late due to late arriving aircraft. Delays reported under the ''late arriving aircraft'' category demonstrate the ripple effects of an earlier flight delay problem. The cause of the initial delay would have to be addressed to cure the delays associated with late arriving aircraft. Some carriers track the initial causes and use an internal code to identify the initial cause for downline late arriving aircraft. Other carriers do not track the downline effects of earlier delays and only code that the flight was late because of the previous flight's late ''turn around.'' While we would like to collect data that identifies the initial causes of downline delays, we are not proposing that carriers alter their tracking systems to provide the data. Rather, we are proposing to give the carriers the flexibility of reporting a delay caused by previous late arriving aircraft under several reporting codes. Under our proposal, a carrier would use the code D for delays attributed to a previous late arriving aircraft and the initial cause is unknown. Also, carriers may use the codes DA for delays attributed to a previous late arriving aircraft where the initial delay was assigned to the air carrier; DB for delays attributed to a previous late arriving aircraft where the initial delay was caused by extreme weather; and DC for delays attributed to a previous late arriving aircraft where the initial delay was assigned to the NAS.

As a result of our delay reporting pilot program with American Airlines, Delta Air Lines, Southwest Airlines, and United Air Lines, we have discovered that most air carriers only track and code delays up to the time the aircraft pushes away from the gate at the origin

airport. After that time, the aircraft is generally under the command of the air traffic control system. Some carriers track delays for each minute of the delay and other carriers track delays only when the delay is five minutes or longer.

One of our aims in developing the causal reporting system is to require minimal change to the air carriers' internal tracking systems, while still collecting useful data. Thus, based on the results of our pilot project, we are proposing to collect the number of minutes for each flight delay category for every flight that arrives 15 minutes or more after the scheduled arrival time. As such, carriers would be required to:

1. Create a bridge or map to translate their internal codes to the BTS assigned categories.

2. Report delay categories when the arrival delay is 15 minutes or more. The proposal would not require carriers to report causal data for flights that are considered Aon-time,'' meaning the flight arrived less than 15 minutes after its published arrival time.

3. Ensure that the total minutes of causal delays equal the actual minutes of arrival delay.

Since not all carriers track and code departure delays of less than 5 minutes, we are proposing that carriers code the total delay as a NAS delay when there is a departure delay of 4 minutes or less and an arrival delay of 15 minutes or more.

Air carriers track only departure delays. Therefore, whenever the arrival delay is greater than the departure delay, the air carriers will assign NAS minutes to make up the difference between the departure delay and the arrival delay (Departure delay + NAS delay = Arrival delay).

Whenever the departure delay is more than the arrival delay, the en route time savings would be prorated back to the departure delay categories. For example, if a 50 minute departure delay consists of a 15 minute air carrier delay, a 10 minute NAS delay, and a 25 minute late arriving aircraft, then the departure delay would be 30% air carrier, 20% NAS and 50% late arriving aircraft. If the flight arrived 40 minutes late, this would be reported in minutes as 12 minutes air carrier, 8 minutes NAS and 20 minutes late arriving aircraft.

Reporting of Delayed Flights

Carriers use a fixed-length file format to report on-time data. We propose to add four-position numeric fields for each of the seven possible causes of delays. Instead of reporting delay codes, we proposes that carriers report the number of minutes attributed to the cause of delay into the assigned fields for the appropriate cause of delay. There often are multiple reasons for delayed flights, and we propose that air carriers report each category of flight delay as applicable. The proposed fixed-length file format is as follows:

FIELD SPECIFICATIONS FOR FORM 234, ON-TIME PERFORMANCE REPORTS

Field and description	Type	Location	Length	Comments
A—Carrier code	Alpha	1–2	2	
B—Flight number	Num	3–6	4	
C—Origin airport code	Alpha	7–9	3	
D—Destination airport code	Alpha	10–12	3	
E—Date of flight operation	Num	13–20	8	Format yyyymmdd.
F—Day of the week of flight operation	Num	21	1	Mon = 1, Sun = 7.
G—Scheduled departure time per OAG	Num	22–25	4	Local time 24 hour clock.
H—Scheduled departure time per CRS	Num	26–29	4	Local time 24 hour clock.
I—Gate departure time (actual)	Num	30–33	4	Local time 24 hour clock.
J—Scheduled arrival time per OAG	Num	34–37	4	Local time 24 hour clock.
K—Scheduled arrival time per CRS	Num	38–41	4	Local time 24 hour clock.
L—Gate arrival time (actual)	Num	42–45	4	Local time 24 hour clock.
M—Difference between OAG and CRS scheduled departure times.	Num	46–49	4	In minutes (2 hrs = 120 min) Caused-In Minutes.
N—Difference between OAG and CRS scheduled arrival times.	Num	50–53	4	In minutes.
O—Scheduled elapsed time per CRS	Num	54–57	4	In minutes.
P—Actual gate-to-gate time	Num	58–61	4	In minutes.
Q—Departure delay time (actual minutes CRS)	Num	62–65	4	In minutes.
R—Arrival delay time (actual minutes CRS)	Num	66–69	4	In minutes.
S—Elapsed time difference (actual minutes CRS).	Num	70–73	4	In minutes.
T—Wheels-off time (actual)	Num	74–77	4	Local time 24 hour clock.
U—Wheels-on time (actual)	Num	78–81	4	Local time 24 hour clock.
V—Aircraft tail number	Alpha/Num	82–87	6	Left justified, trailing blanks.
W—Cancellation code	Num	88	1	(1, 2, or 3).
X—Minutes late for delay code A	Num	89–92	4	Carrier Caused Delays—In min.
Y—Minutes late for delay code B	Num	93–96	4	Extreme Weather Delays—In minutes.
Z—Minutes late for delay code C	Num	97–100	4	NAS Delays—In minutes.
AA—Minutes late for delay code D	Num	101–104	4	Late Arriving Aircraft Delays—In minutes.
AB—Minutes late for delay code DA	Num	105–108	4	Late Arriving Aircraft—Carrier Caused—In Minutes.
AC—Minutes late for delay code DB	Num	109–112	4	Late Arriving Aircraft—Weather.
AD—Minutes late for delay code DC	Num	113–116	4	Late Arriving Aircraft—NAS Caused—In Minutes.

Cancellation codes	Delay codes
1—Carrier Caused	A—Carrier Caused.
2—Extreme Weather	B—Extreme Weather.
3—National Aviation System	C—National Aviation System.
	D—Late Arriving Aircraft.
	DA—Late Arriving Aircraft—Carrier Caused.

Cancellation codes	Delay codes
	DB—Late Arriving Aircraft—Weather Caused. DC—Late Arriving Aircraft—NAS Caused.

All numeric fields for which data are unavailable will be zero-filled.

All alpha fields for which data are unavailable will be left blank. The data fields in this document are Y2K compliant.

For delays that were caused by a previous late arriving aircraft, the carrier has two options for reporting this delay. Carriers that do not track the initial cause of the late arriving aircraft would report the minute for the late arriving aircraft in Delay Code D, and report zeros for delay codes DA, DB and DC. Carriers that track the initial cause, would assign the minutes to the applicable DA, DB and DC codes, and report a zero for delay code D.

Examples of Delayed Flight Coding

1. A flight received a 20 minute ground hold because of congestion at the destination airport, and the flight was 18 minutes late arriving at the destination airport gate. The delayed flight would be coded 18 minutes for NAS.

2. A flight was 4 minutes late pushing back from the gate and arrived 21 minutes late. The delayed flight would be coded 21 minutes for NAS. Please note in this example that the air carrier delay was less than 5 minutes, and thus, would not be attributed to the air carrier.

3. A flight was delayed 4 minutes to load a handicapped passengers and another 3 minutes to load late-arriving baggage. The flight arrived 15 minutes late. The delayed flight would be coded 7 minutes for air carrier and 8 minutes for NAS. Please note in this example that while no single air carrier caused delay was 5 minutes or more, the sum of the carrier delay was more than 5 minutes and the total delay was 15 minutes and thus, reportable.

4. A flight was delayed 20 minutes waiting for connecting passengers from another flight and arrived 28 minutes late. The delayed flight would be coded 20 minutes for air carrier and 8 minutes for NAS.

5. A flight had a 16 minute ground hold and arrived 14 minutes late. There is no delay coding as the flight is consider on-time.

6. A flight is 20 minutes late because of weather and is coded 20 minutes for weather. The next flight with that aircraft is 15 minutes late leaving the gate and arrives 20 minutes late. The delayed flight would be coded 15 minutes for late arriving aircraft—weather or 15 minutes for late arriving flight, if the carrier did not track the initial delay cause. Please note in this example that the air carrier made up 5 minutes of the initial late arriving aircraft delay, but then experienced a 5 minute en-route delay.

7. A flight was 30 minutes late pushing back from the gate. The 30 minute delay consisted of 10 minutes for a late arriving aircraft and 20 minutes for slow boarding process because of an oversales problem. The flight arrived 24 minutes late. The delayed flight would be coded 8 minutes for late arriving flight and 16 minutes for air carrier. Please note in this example that the 6 minutes gained after push back was prorated back to the two recorded delays. In this example, late arriving aircraft was 33.3% of the original delay and the air carrier delay was 66.6% of the delay. Therefore, late arriving aircraft was computed as 33.3% of 24 which equals 8; and air carrier was computed as 66.6% of 24 which equals 16.

8. A flight was 20 minutes late because of a thunderstorm and 6 minutes late because of a crew problem. The flight arrived 18 minutes late. The delayed flight would be coded 14 minutes for weather and 4 minutes for air carrier. In this example, the air carrier must round the prorated minutes to whole numbers. Carriers should not report fractions or decimals. Also, carriers would report an air carrier delay of less than 5 minutes because the carrier was required to track the crew delay because it was 5 minutes or more.

9. Flight number 234 was 20 minutes late departing the gate because the air carrier substituted a spare aircraft to reduce a known upcoming delay. The flight was scheduled to be operated with an aircraft that, at the time, was experiencing a 3 hour extreme weather delay. Flight number 234 arrived 16 minutes late, and was reported as a 16 minute late arriving aircraft—extreme weather.

Reporting of Cancelled Flights

Carriers use a fixed-length file format to report on-time data. We propose to add a one position numeric field for the cancellations code. The proposed codes are as follows: ''1''—Air Carrier, ''A2''—Extreme Weather, ''3''—NAS (national aviation system).

Examples of Cancelled Flight Coding

1. A flight cancelled because of mechanical problems is code ''1'' for air carrier.

2. Flight 123, BOS–DCA was cancelled because, overnight, the airport had two feet of snow. The cancellation would be coded ''2'' for weather.

3. The next segment of Flight 123, DCA—MIA was cancelled because the aircraft that was to be used for this flight is stuck in two feet of snow in Boston. The weather in Washington and Miami is clear. The cancellation would be coded ''2'' for weather, because the intended aircraft was out of position as a result of a prior cancellation attributed to weather.

4. It's a clear day at O'Hare. However, there is a ground hold for flights to DFW because of severe thunderstorm around the DFW airport. After a 3 hour wait, the weather at DFW has not changed, and the carrier cancels the flight. The cancellation would be coded ''2'' for weather.

5. It's a rainy, misty day at O'Hare. Operations have been slow all morning. The air carrier receives a call from air traffic control asking that it cancel one of its next five flights to allow the airport to return normal operations. Other carriers receive similar calls. These cancellations would be coded ''3'' for NAS.

ADP Computer Tape

We are proposing to remove the requirement that carriers must submit on-time data on ADP computer tape. BTS is migrating from the mainframe computer to a mid-tier processing environment. Thus, BTS will be able to accommodate other types of reporting media.

Rulemaking Analyses and Notices

Executive Order 12866 and DOT Regulatory Policies and Procedures

This proposed rule is ''significant'' under Executive Order 12866 and the regulatory policies and procedures of the Department of Transportation (44 FR 11034), and was reviewed by the Office of Management and Budget. As discussed above, the purpose of the proposed rule is to disclose more fully to the public the nature and source of the delays and cancellations experienced by air travelers. This objective is achieved by amending 14 CFR 234 to require reporting air carriers

to identify and report causes of airline delays and cancellations. Based on information collected during the pilot project, we estimate that the proposed reporting requirements would require each reporting carrier to expend 10–20 hours to reconfigure its data system. Once these initial resources are expended, we estimate that there will be no additional costs or burdens for delay and cancellation reporting. We estimated reprogramming costs of $100.00/hour. Thus, we estimate that for the 12 reporting air carriers, there would be an initial reprogramming costs of $12,000–$24,000. We estimate that the benefits to the traveling public, as well, more accurate information for the allocation of transportation resources outweigh the minimal costs that would be incurred by the reporting air carriers.

Executive Order 12612

This proposed rule has been analyzed in accordance with the principles and criteria contained in Executive Order 12612 (''Federalism'') and we have determined the rule does not have sufficient federalism implications to warrant the preparation of a Federalism Assessment.

Initial Regulatory Flexibility Act Analysis

The Regulatory Flexibility Act (5 U.S.C. 601 *et seq.*) requires an agency to review its regulations to assess their impact on small entities unless the agency determines that a rule is not expected to have a significant impact on a substantial number of small entities. Unless alternative definitions have been established by the agency in consultation with the Small Business Administration (SBA), the definition of Asmall business' has the same meaning as under the Small Business Act (15 CFR parts 631–657c). For those companies providing scheduled passenger air transportation, the SBA defines a small business as an air carrier that has 1500 employees or fewer (See NAICS Number 48111).

The proposed rule would apply only to those air carriers that meet the part 234 reporting criteria (*i.e.,* carriers that hold a certificate under 49 U.S.C. 41102 and account for at least 1 percent of the domestic scheduled-passenger revenues in the past 12 months). We have reviewed our data base and find that none of the air carriers that report under part 234 have 1500 employees or fewer. In fact, our information indicates that all of these carriers employ more than 3,000 employees. Therefore, we believe that the proposed rule would not apply to any Asmall business' as defined by the SBA.

Thus, based on the above discussion, I certify this proposed rule will not have a significant economic impact on a substantial number of small entities.

Unfunded Mandates Reform Act

This rulemaking would not impose unfunded mandates under the Unfunded Mandates Reform Act of 1995. It would not result in costs of $100 million or more to either State, local, or tribal governments, in the aggregate, or to the private sector.

Environmental Assessment

We believe that the proposed changes to the part 234 reporting system would have no significant impact on the environment. The changes proposed in this NPRM should increase the quality of data collected on the causes of airline delays and cancellations, thus increasing our ability to evaluate potential air traffic problems and allocate the appropriate resources. Thus, the proposed revisions should produce a small net benefit to the environment by improving the data sources used in regulatory development. Therefore, we find that there are no significant environmental impacts associated with this proposed rule.

Initial Paperwork Reduction Act Analysis

The reporting and recordkeeping requirements associated with this proposed rule are being sent to the Office of Management and Budget in accordance with 44 U.S.C. Chapter 35 under OMB NO: 2138–0040. *Administration:* Bureau of Transportation Statistics; *Title:* Airline Service Quality Performance Reports; *Need for Information:* Statistical information on the cause of airline delays and cancellations; *Proposed use of Information:* To disclose more fully to the public the nature and source of the delays and cancellations experienced by air travelers; *Frequency:* Monthly; *Burden Estimate:* 180 hours; Average Annual Burden Hours per Respondent After Final Rule is Issued—No burden. Based on information collected during the pilot project, we estimate that the proposed reporting requirements would require each reporting carrier to expend 10–20 hours to reconfigure its data system. We estimated reprogramming costs of $100.00/hour. Thus, we estimate that for the 12 reporting air carriers, there would be an initial reprogramming costs of $12,000–$24,000. Once these initial resources are expended, we estimate that there would be no additional annual burden. We invite comments on our burden estimates. For further information or to comment on the burden hour estimate contact: The Office of Information and Regulatory Affairs, Office of Management and Budget, Room 10235, New Executive Office Building, Washington, DC 20503, Attention Desk Office for the Department of Transportation or Bernie Stankus at the address listed under **FOR FURTHER INFORMATION CONTACT.**

Regulation Identifier Number

A regulation identifier number (RIN) is assigned to each regulatory action listed in the Unified Agenda of Federal Regulations. The Regulatory Information Service Center publishes the Unified Agenda in April and October of each year. The RIN number 2139–AA09 contained in the heading of this document can be used to cross reference this action with the Unified Agenda.

Regulatory Text

Accordingly, the Bureau of Transportation Statistics, under delegated authority pursuant to 49 CFR part 1, proposes to amend chapter II of 14 CFR, as follows:

List of Subjects in 14 CFR Part 234

Advertising, Air carriers, Consumer protection, Reporting requirements, Travel agents.

PART 234—[AMENDED]

1. The authority citation for Part 234 would be revised to read as follows:

Authority: 49 U.S.C. 329 and chapters 401, 413, 417.

2. Section 234.4 would be amended by adding paragraphs (a)(16) through (a)(23), revising paragraph (b), and adding paragraphs (g), (h) and (i) as follows:

§ 234.4 Reporting of on-time performance.

(a) * * *

(16) Causal code for cancellation, if any.

(17) Minutes of delay attributed to the air carrier, if any.

(18) Minutes of delay attributed to extreme weather, if any.

(19) Minutes of delay attributed to the national aviation system, if any.

(20) Minutes of delay attributed to a previous late arriving aircraft, if any.

(21) Minutes of delay attributed to a previous late arriving aircraft where the original delay was an air carrier delay, if any.

(22) Minutes of delay attributed to a previous late arriving aircraft where the original delay was caused by extreme weather, if any.

(23) Minutes of delay attributed to a previous late arriving aircraft where the

original cause was assigned to the national aviation system, if any.

(b) When reporting the information specified in paragraph (a) of this section for a diverted flight, a reporting carrier shall use the original scheduled flight number and the original scheduled origin and destination airport codes. Carriers are not required to report causal information for diverted flights.

* * * * *

(g) Reporting carriers should use the following codes to identify causes for cancelled flights:

CODE
1—Air Carrier
2—Extreme Weather
3—National Aviation System (NAS).

(1) Air Carrier cancellations are due to circumstances that were within the control of the air carrier (*e.g.,* lack of flight crew, maintenance, etc.).

(2) Extreme weather cancellations are caused by weather conditions (e.g., significant meteorological conditions), actual or forecasted at the point of departure, en route, or point of arrival that, in accordance with applicable regulatory standards and/or in the judgment of the air carrier, prevents operation of that flight and/or prevents operations of subsequent flights due to the intended aircraft being out of position as a result of a prior cancellation or delay attributable to weather.

(3) NAS cancellations are caused by circumstances within the National Aviation System. This term is used to refer to a broad set of condition: weather-non extreme, airport operations, heavy traffic volume, air traffic control, etc.

(h) Reporting carriers should use the following causes to identify the reasons for delayed flights:

CAUSE
A—Air Carrier
B—Extreme weather
C—NAS
D—Late arriving aircraft
DA—Late arriving aircraft—air carrier
DB—Late arriving aircraft—extreme weather
DC—Late arriving aircraft—NAS.

(1) Air carrier delays are due to circumstances within the control of the air carrier.

(2) Extreme weather delays are caused by weather conditions (e.g., significant meteorological conditions, actual or forecasted at the point of departure, en route, or point of arrival that, in accordance with applicable regulatory standards and/or in the judgment of the air carrier, prevents operation of that flight and/or prevents operations of subsequent flights due to the intended aircraft being out of position as a result of a prior cancellation or delay attributable to weather.

(3) NAS delays are caused by circumstances within the National Aviation System. This term is used to refer to a broad set of conditions: Weather—non extreme, airport operations, heavy traffic volume, air traffic control, etc.

(4) Late arriving aircraft delays are the result of a late incoming aircraft from the previous flights. Reporting carriers should use this code only when they are unable to identify the root cause of the initial delay.

(5) Late arriving aircraft—carrier caused delays are the result of a late incoming aircraft from the previous flight, in which the root cause of the late arriving aircraft was within the air carrier's control.

(6) Late arriving aircraft—extreme weather delays are the result of a late incoming aircraft from the previous flight, in which the root cause of the late arriving aircraft was extreme weather.

(7) Late arriving aircraft—NAS caused delays are the result of a late incoming aircraft from the previous flight, in which the root cause of the late arriving aircraft was a NAS problem.

(i) When reporting causal codes in paragraph (a), reporting carriers are required to code delays only when the arrival delay is 15 minutes or greater; and reporting carriers must report each causal component of the reportable delay when the causal component is 5 minutes or greater.

3. Section 234.5 would be revised to read as follows:

§ 234.5 Form of reports.

Except where otherwise noted, all reports required by this part shall be filed within 15 days of the end of the month for which data are reported. The reports must be submitted to the Office of Airline Information in a format specified in accounting and reporting directives issued by the Assistant Director for Airline Information.

Ashish Sen,

Director, Bureau of Transportation Statistics.

[FR Doc. 01–31725 Filed 12–26–01; 8:45 am]

BILLING CODE 4910–62–P

SECURITIES AND EXCHANGE COMMISSION

17 CFR Part 230

[Release No. 33–8041; File No. S7–23–01]

RIN 3235–AI25

Defining the Term ''Qualified Purchaser'' Under the Securities Act of 1933

AGENCY: Securities and Exchange Commission.

ACTION: Proposed rule.

SUMMARY: The Securities and Exchange Commission today proposes a definition for the term ''qualified purchaser'' under the Securities Act of 1933 to implement a provision of the National Securities Markets Improvement Act of 1996. The proposed definition mirrors the definition of accredited investor under Regulation D of the Securities Act. Thus, the new qualified purchaser definition identifies well-established categories of persons we have previously determined to be financially sophisticated and therefore not in need of the protection of state registration when they are offered or sold securities. This proposal should facilitate capital formation, especially for small businesses. It will implement the Congressional intent, impose uniformity in the regulation of transactions to these financially sophisticated persons and reduce burdens on capital formation.

DATES: Public comments are due February 25, 2002.

ADDRESSES: Please send three copies of your comment letter to Jonathan G. Katz, Secretary, U.S. Securities and Exchange Commission, and 450 Fifth Street, NW, Washington DC 20549–0609. You may send comment letters electronically to the following e-mail address: Rule-comments@sec.gov. Comment letters should refer to File No. S7–23–01; if you use e-mail, please include the file number on the subject line. We will make all comments available for public inspection and copying in our public reference room at the same address. Comment letters (submitted electronically) will be posted on our Internet site (http://www.sec.gov).[1]

FOR FURTHER INFORMATION CONTACT: Marva Simpson, Office of Small Business Policy, at (202) 942–2950, Division of Corporation Finance, U.S. Securities and Exchange Commission,

[1] We do not edit personal, identifying information, such as names or electronic mail addresses, from electronic submissions. Submit only information you wish to make publicly available.

450 Fifth St., NW., Washington, DC 20549–0310.

SUPPLEMENTARY INFORMATION: The National Securities Markets Improvement Act of 1996 (''NSMIA'') [2] preempts the state registration and review of transactions involving ''covered securities.'' It amended Section 18 [3] of the Securities Act of 1933 (''Securities Act'') [4] to establish seven classes of ''covered securities.'' All but one of these classes is self-executing. The one that is not—securities offered or sold to qualified purchasers—requires Commission rulemaking to adopt a definition of the term ''qualified purchaser.'' [5] We are proposing for comment a definition to be contained in Rule 146 [6] of the Securities Act.

I. Background

A. NSMIA

In NSMIA, Congress realigned the federal and state regulatory partnership governing registration of securities offerings, thus changing the dual system of securities offering registration that has prevailed in this country since the 1930s. While the Commission retains authority to require that securities offerings be registered, the states may not require registration of offerings involving ''covered securities.'' [7] Section 18 of the Securities Act now specifies the classes of covered securities:

- Securities that are listed on the New York Stock Exchange (''NYSE''), American Stock Exchange (''Amex'') or Nasdaq National Market System (''Nasdaq NMS''); [8]
- Securities issued by an investment company registered under the Investment Company Act of 1940 [9] (the ''1940 Act'');
- Most exempt securities listed in Section 3(a) of the Securities Act; [10]
- Securities issued in exempt transactions under Section 4(1) or (3) of the Securities Act [11] where the issuer files reports under the Securities Exchange Act of 1934 (''Exchange Act''); [12]
- Securities issued in exempt transactions under Section 4(4) of the Securities Act; [13]
- Securities issued in exempt offerings under Rule 506 of Regulation D; [14] and
- Any security offered or sold to a ''qualified purchaser.'' [15]

The states retain authority to require the registration of other types of securities offerings, including certain offerings registered with us.[16] They also retain authority to regulate, through registration or exemption, securities offerings made under certain federal exemptions from registration,[17] except to the extent offers or sales are made to qualified purchasers.

Congress authorized us to define the term ''qualified purchaser'' under the Securities Act to include ''sophisticated investors, capable of protecting themselves in a manner that renders regulation by State authorities unnecessary,'' [18] thus preempting securities transactions with these persons from state ''blue sky'' law. Although the states may not require registration of offers and sales of securities to qualified purchasers, offers and sales to those persons must be registered with us under the Securities Act, unless a federal registration exemption is available.

Our proposal is to define ''qualified purchaser'' to mean an accredited investor as defined in Rule 501(a) of Regulation D.[19] We believe that it is appropriate to equate qualified purchasers with accredited investors because the regulatory and legislative history of both terms are based upon similar notions of the financial sophistication of investors,[20] and accredited investor is a long-standing concept familiar to the small business community and other industry participants. Thus, unifying the definition for financially sophisticated investors simplifies the regulatory structure for issuers and should facilitate the capital formation process. Moreover, our considerable regulatory experience with the use of the term ''accredited investor'' leads us to believe it strikes the appropriate balance between the necessity for investor protection and meaningful relief for issuers offering securities, especially small businesses.

B. The Development of the Accredited Investor Concept

Transactions that do not involve any public offering are exempt from federal registration under Section 4(2) of the Securities Act.[21] Because the Securities Act does not define these transactions, the Courts and the Commission have interpreted this exemption. Long ago, the U.S. Supreme Court set the basic criteria for the Section 4(2) exemption in *SEC* v. *Ralston Purina Co.*[22] The Court indicated that the application of the non-public offering exemption depended on whether the offerees were able to fend for themselves and had access to the same kind of information that would be disclosed in registration. The Court noted that such persons, by virtue of their knowledge, would not need to rely on the protections afforded by registration.

After the *Ralston Purina* decision, we provided guidance on the Section 4(2)

---

[2] Pub. L. 104–290, 11 Stat. 3416 (Oct. 11, 1996).

[3] 15 U.S.C. 77r.

[4] 15 U.S.C. 77a *et seq.*

[5] Section 18(b)(3) [15 U.S.C. 77c(b)(3)].

[6] 17 CFR 230.146.

[7] See the House-Senate Conference Report, H.R. Rep. No. 864, 104th Cong. 2d Sess. at 40 (1996) (the ''Conference Report''). In these cases, the states may not prohibit, limit or impose any conditions on the use of any offering document. In addition, they may not prohibit, limit, or impose any conditions on the offer or sale of a covered security based on the merits of the offering or the issuer. See Section 18(a)(2) and (3) of the Securities Act [15 U.S.C. 77r(a)(2) and (3)]. The states retain limited authority over offerings of some covered securities: they may require notice filings and fees. Also, they continue to be able to investigate and bring fraud cases involving securities and securities transactions. See Section 18(c)(1) and (2) of the Securities Act [15 U.S.C. 77r(c)(1) and (2)].

[8] This category also includes securities that are senior, or equal in seniority, to those listed securities. Companies that offer securities listed on these national markets need not register with the states. We have expanded this category to include securities listed on Tier 1 of the Pacific Exchange, Tier I of the Philadelphia Stock Exchange, and the Chicago Board Options Exchange. See Securities Act Rule 146(b) [17 CFR 230.146(b)].

[9] 15 U.S.C. 89a–1 *et seq.*

[10] 15 U.S.C. 77c(a).

[11] 15 U.S.C. 77d(1) and (3).

[12] 15 U.S.C. 78a *et seq.*

[13] 15 U.S.C. 77d(4).

[14] 17 CFR 230.506.

[15] See Section 18(b)(3) [15 U.S.C. 77r(b)(3)].

[16] They may require registration of offerings of securities listed on markets other than the national markets, such as the regional exchanges, the Nasdaq SmallCap market, the NASD's over-the-counter (''OTC'') Electronic Bulletin Board and the OTC ''pink sheets.'' The pink sheets are published by the National Quotation Bureau, Inc.

[17] For instance, the states may regulate exempt offerings under Section 3(b) of the Securities Act [15 U.S.C. 77c(b)], including Rule 504 and 505 offerings [17 CFR 230.504 and 230.505] and Regulation A offerings [17 CFR 230.251–263], offerings under Section 4(6) of the Securities Act [17 U.S.C. 77d(6)], and offerings under Section 4(2) of the Securities Act [15 U.S.C. 77d(2)] that do not satisfy the Rule 506 safe harbor requirements.

[18] H.R. Rep. No. 622, 104th Cong. 2d Sess. at 31 (1996) (''House Report''). See also S. Rep. No. 293, 104th Cong. 2d Sess. at 15 (1996) (''Senate Report''). These committee reports relate to bills that were eventually enacted as NSMIA.

[19] 17 CFR 230.501(a). Rule 215 [17 CFR 230.215], along with Section 2(a)(15) of the Securities Act [15 U.S.C. 77b(a)(15)(i)], provides the same definition for accredited investors as Rule 501(a), but for purposes of Section 4(6) of the Securities Act.

[20] See note 18 above. Congress deemed accredited persons as sophisticated and able to protect their financial interests without regulatory assistance. See also the Small Business Investment Incentive Act of 1980, Pub.L. 96–477 (Oct. 21, 1980), and Senate Report at 15 (''based on their level of wealth and sophistication, investors who come within the definition of qualified purchaser do not require the protection of registration.'')

[21] 15 U.S.C. 77d(2).

[22] *SEC* v. *Ralston Purina Co.,* 346 U.S. 119 (1953). At the time of the *Ralston Purina* decision, Section 4(1) contained the non-public offering exemption.

criteria in our rules and interpretations. For instance, former Rule 146, which was rescinded in 1982, provided a test for determining whether persons were financially sophisticated enough to be offered or purchase securities in non-public offerings.[23] That test, however, still required issuers to make a subjective determination concerning the sophistication of each offeree and purchaser. Further, it created uncertainty about whether the exemption was available and thus posed problems for issuers, primarily small issuers, about potential rescission liability should the exemption turn out to be unavailable. In response to these concerns, the accredited investor concept was created in 1979 as a part of former Rule 242.[24] There, specific classes of investors were designated as accredited investors based on their ability to obtain information upon which to make an informed investment decision.[25]

Shortly after we adopted Rule 242, Congress added the accredited investor concept to the Securities Act.[26] The statutory definition was similar to Rule 242, although not identical.[27] It defines types of purchasers that, based on objective criteria indicating financial sophistication and ability to fend for themselves, do not require the protections of registration under the federal securities laws.[28] Congress determined that companies offering and selling securities in non-public transactions solely to these investors should be exempt from Securities Act registration.[29]

Congress itself established several categories of accredited investors in Section 2(a)(15)(i) of the Securities Act and in Section 2(a)(15)(ii) authorized us to adopt additional categories based on ''such factors as financial sophistication, net worth, knowledge, and experience in financial matters, or amount of assets under management.'' [30] This authority has been used to expand the variety and number of persons classified as accredited investors.[31]

The definitions accredit some investors based on their income, net worth, and assets. Natural persons qualify as accredited investors if they meet certain income or net worth tests. Accredited investors, for instance, include natural persons with individual incomes in excess of $200,000 (or joint spousal incomes of $300,000) for the two most recent years, if they reasonably expect to earn at least the same amount in the current year. Natural persons with individual (or joint, with a spouse) net worths over $1 million also are considered to be accredited investors.[32]

Other investors are accredited if they have more than $5 million of assets. These generally include state or ERISA employee benefit plans, charitable organizations or business entities if they were not formed for the specific purpose of investing in the securities offered, and trusts if they were not formed for the specific purpose of acquiring the securities offered and their purchase is directed by a sophisticated person.[33]

The current accredited investor definition also includes investors that are financially sophisticated by their nature. These include various institutional investors and employee benefit plans where sophisticated fiduciaries make investment decisions.[34] Directors, executive officers, and general partners of securities issuers also are accredited, due to their relationship with the issuer, and any entity where all of its equity owners are accredited investors.[35]

C. Possible Alternative Definitions for Securities Act Qualified Purchasers

NSMIA's legislative history indicates that qualified purchasers for purposes of the Securities Act preemption of state regulation should include investors that, by virtue of their financial sophistication and ability to fend for themselves, do not require the protections of registration under the state securities laws.[36] As set forth below, there are a number of existing definitions in the federal securities regulatory framework, other than ''accredited investor,'' concerning financially sophisticated investors that could be used to implement the qualified purchaser concept under the Securities Act. Of course, a wholly new definition could be crafted. Given the legislative intent which looks to simplification, conforming different state standards governing sophisticated investors, eliminating redundancy and working a meaningful preemption in the area of disparate securities registration systems to reduce unnecessary costs to issuers, we believe using ''accredited investor'' is more appropriate than any of the alternatives. We solicit comment on whether any of the other definitions would be appropriate for purposes of Section 18(b)(3).

1. Qualified Institutional Buyers

In April 1990, as part of Rule 144A under the Securities Act,[37] the Commission created another category of financially sophisticated investors—qualified institutional buyers or QIBs. Rule 144A provides a safe harbor exemption from federal registration requirements for resales of restricted securities to QIBs. QIBs generally are institutions or other entities owning and investing large amounts of securities, ranging from $10 million up to $100 million depending on the type of QIB. These investors would undoubtedly fall within the definition of accredited

[23] Rule 506 of Regulation D replaced former Rule 146. See the adopting release for Regulation D, note 31 below.

[24] Rule 505 of Regulation D replaced Rule 242. See the adopting release for Regulation D, note 31 below.

[25] See Release No. 33–6180 (Jan. 17, 1980) [45 FR 6362].

[26] Congress added the accredited investor concept and Section 4(6) to the Securities Act as part of the Small Business Investment Incentive Act of 1980, Pub. L. 96–477 (Oct. 21, 1980).

[27] Rule 242 defined ''accredited person'' as any bank as defined in Section 3(a)(2) of the Securities Act whether acting individually or as a fiduciary; an insurance company as defined in Section 2(a)(13) of the Securities Act; an employee benefit plan within the meaning of Title I of the Employee Retirement Income Security Act of 1974 [29 U.S.C. 1002] where the plan fiduciary is a bank, insurance company, registered investment company or investment advisor or a licensed small business investment company; any person purchasing $100,000 or more; and any director or executive officer of the issuer. Release No. 33–6180 (Jan. 17, 1980) [45 FR 6362].

[28] Release No. 33–6683 (Jan. 16, 1987) [52 FR 3015].

[29] Section 4(6) of the Securities Act provides issuers an exemption for offers and sales of securities to accredited investors if they offer no more than $5 million of securities and do not engage in general solicitation. The exemption provides for no reasonable belief standard as to investors accreditation. Building on this legislative construction, the Commission created Rules 505 and 506 of Regulation D, which limit the number of unaccredited investors in offerings under these rules to no more than 35. Accredited investors, however, are excluded from the 35-purchaser limit in these exempt offerings. Issuers relying on Rules 505 and 506 also must provide specific disclosure to unaccredited investors. The rules do not require issuers to provide that disclosure to accredited investors.

[30] 15 U.S.C. 77b(a)(15)(i) and (ii).

[31] Regulation D, initially adopted in 1982, contains a definition of accredited investor that includes the statutory categories of accredited investors plus the additional categories the Commission created. See Release No. 33–6389 (Mar. 8, 1982) [47 FR 11251]. The Regulation D definition applies to offerings under Rules 505 and 506 of Regulation D. The definition for purposes of Section 4(6) is contained partly in Section 2(a)(15)(i) of the Securities Act and partly in Securities Act Rule 215. Rule 215 contains the categories of accredited investors adopted by the Commission. Taken together, the accredited investor categories under Section 4(6) are the same as under Regulation D.

[32] Securities Act Rule 501(a)(5) and (6) [17 CFR 230.501(a)(5) and (6)].

[33] Securities Act Rule 501(a)(1), (3) and (7) [17 CFR 230.501(a)(1), (3) and (7)].

[34] Securities Act Rule 501(a)(1), (2) and (3) [17 CFR 230.501(a)(1), (2) and (3)].

[35] Securities Act Rule 501(a)(1), (4) and (8) [17 CFR 230.501(a)(1), (4) and (8)].

[36] See Senate Report at 15 and House Report at 31.

[37] 17 CFR 230.144A. See Release No. 33–6862 (Apr. 23, 1990) [55 FR 17933].

investor and transactions with them would be with qualified purchasers under our proposed definition. Defining qualified purchaser as a QIB would significantly reduce the number of transactions preempted by Section 18(b)(3). Such a high threshold might make this Section 18 preemption less meaningful and thus not consistent with what we see as Congress' intent.

2. 1940 Act Qualified Purchasers

NSMIA also uses the term ''qualified purchaser'' under Section 3(c)(7) of the 1940 Act.[38] There, the concept is tied to a person owning a certain dollar amount of investments.[39] Congress determined that the level of a person's investments should be used to measure the person's financial sophistication in the context of the 1940 Act. The levels were Congressionally set at $5 million for individuals and $25 million for entities and are consistent with the 1940 Act objective of addressing special risks associated with investments in pooled vehicles. Because of the high dollar levels established in the statute, the specific purpose for the provision and the Congressional reluctance to use them for the securities registration preemption, this alternative is not as appropriate as accredited investor.

3. Investment Advisers Act of 1940 Qualified Clients

Rule 205–3[40] under the Investment Advisers Act of 1940[41] provides a limited exemption from that statute's prohibition on charging performance fees to clients. Such a person is one who has at least $750,000 under management with the adviser or in excess of $1.5 million net worth; or is a ''qualified purchaser'' as defined for purposes of the 1940 Act or is a highly knowledgeable employee of the adviser. This relief from general prohibitions in the Advisers Act regarding the linking of adviser compensation to the gains or appreciation of the assets under management recognizes that certain clients may want to use performance fees as a technique of dealing with an adviser and that they are sufficiently sophisticated that the prohibitions in the Advisers Act can be modified. We think that these purposes are quite different from those sought to be addressed in our proposed definition of a covered security.

4. Exchange Act Qualified Investors

Recently, the Congress adopted amendments to the Exchange Act[42] definitions of broker[43] and dealer[44] to include a list of specific exceptions from these definitions for banks. Included in this amendment is a new concept of ''qualified investor.''[45] When a bank participates in the issuance or sale of certain ''identified banking products'' to qualified investors, the bank is excepted from both the new broker and dealer definitions.[46] Because of the high dollar levels in the provision and the special purpose for the provision, this alternative is not as appropriate as accredited investor.

We solicit comment on these existing standards in our regulations which we use to measure financial sophistication and whether concepts used there might be transposed or modified for purposes of Section 18(b)(3). In particular, we ask whether the value of a person's investments would serve as a basis for who is a ''qualified purchaser.'' If so, what are the appropriate amounts? Are there assets that should be included or excluded from this definition if we were to use this model? For example, how should personal residences, automobiles, and retirement accounts be treated?

II. Proposed Definition

The new qualified purchaser definition would have the same meaning as accredited investor. Offers and sales to these persons would not be subject to state registration.[47] Proposed Rule 146(c) under the Securities Act would refer to Rule 501(a) of Regulation D.[48] We believe that the harmonization

[38] 15 U.S.C. 80a–3(c)(7). This section creates an exclusion from the definition of an investment company for privately offered investment companies, such as ''hedge funds,'' owned solely by qualified purchasers.

[39] Section 3(a)(51) of the 1940 Act [15 U.S.C. 80a–3(a)(51)]. The Division of Investment Management has developed a detailed definitional scheme in Commission regulations under the 1940 Act in Rule 2a51–1 [17 CFR 270.2a51–1].

[40] 17 CFR 275.205–3.

[41] 15 U.S.C. 80b–1 et seq.

[42] Gramm-Leach-Bliley Act, Pub. L. No. 106–102, 113 Stat. 1338 (Nov.12, 1999).

[43] 15 U.S.C. 78c(a)(4).

[44] 15 U.S.C. 78c(a)(5).

[45] The definition includes 1940 Act registered investment companies, banks, savings and loan associations, brokers, dealers, business development companies, licensed small business investment companies, certain employee benefit plans, related trusts, certain market intermediaries, associated persons of a broker or dealer other than a natural person, foreign banks, foreign governments, companies or individuals owning and investing on a discretionary basis at least $25 million ($10 million for asset-backed securities), governments or political subdivisions owning or investing on a discretionary basis at least $50 million, and multinational entities. The Commission also was given authority to define ''qualified investor'' as any other person based upon such factors as the individual's financial sophistication, net worth, knowledge and experience in financial matters. Section 3(a)(54) of the Exchange Act [15 U.S.C. 78c(a)(54)].

[46] Additionally, certain asset-backed securities transactions between the bank and a qualified investor do not make the bank a ''dealer.'' The Commission has adopted interim final regulations. Release No. 34–44291 (May 11, 2001) [66 FR 27760]. The comment period for the interim final regulations was extended from July 17, 2001 until September 4, 2001. The effective date of the statutory amendments, originally set for May 12, 2001, has been extended until May 12, 2002. Release No. 34–44569; 34–44570 (July 18, 2001) [66 FR 38370].

[47] We stress, however, that persons making these offers and sales, or otherwise participating in effecting securities transactions, must continue to consider whether their activities require them to register with the Commission as broker-dealers. Broker-dealer registration generally is required to effect transactions in securities, even if those transactions are exempt from registration under the Securities Act. Release No. 34–42728 (April 28, 2000) [65 FR 25843]. The ''exempted securities'' for which broker-dealer registration is not required are strictly limited and do not include securities issued under Regulations A, D, or S or privately placed securities that would be ''restricted'' securities under Securities Act Rule 144. *Id.*

Broker-dealer registration under the Exchange Act provides protections to investors and the securities markets that are not present under the Securities Act. Release No. 34–27017 (July 18, 1989) [54 FR 30013]; see also Release No. 34–30608 (April 20, 1992) [57 FR 18004]. For example, regulations promulgated under the Exchange Act require registered broker-dealers to comply with extensive net capital, recordkeeping, and reporting obligations. In addition, registered broker-dealers must be members of a self-regulatory organization and the Securities Investor Protection Corporation. They are also subject to fiduciary duties and special antifraud rules, as well as the Commission's broad enforcement authority over broker-dealers. Release No. 34–27017.

[48] The eight categories of accredited investors under Rule 501(a) include:

(1) Banks, insurance companies, registered investment companies; business development companies; savings and loan associations and similar institutions; registered broker-dealers purchasing for their own accounts; employee plans subject to ERISA advised by a bank, savings and loan association, insurance company or registered investment advisor; any employee plan subject to ERISA with total assets in excess of $5 million; any self-directed plan where investment decisions are made solely by accredited investors; employee plans established and maintained by governments of the states or their political subdivisions, as well as their agencies and instrumentalities, if they have total assets in excess of $5 million.

(2) Private business development companies meeting the definition in Section 202(a)(22) of the Investment Advisers Act of 1940 [15 U.S.C. 80b–2(a)(22)].

(3) Any organization described as exempt in Section 501(c)(3) of the Internal Revenue Code [26 U.S.C. 501(c)(3)], corporation, Massachusetts or similar business trust, limited partnership, if not formed for the purpose of the offered investment and having total assets in excess of $5 million.

(4) Directors, executive officers and general partners of general partners.

(5) Natural persons whose individual or joint net worth with a spouse exceeds $1 million.

(6) Natural persons with individual income in excess of $200,000 in each of the past two years, or joint income with his or her spouse in excess of $300,000 in each of those years, with the expectation for the same income levels in the current year.

(7) Any trust with total assets in excess of $5 million, if not formed for the offered investment, where a sophisticated person directs the purchase.

of the terms qualified purchaser and accredited investor will simplify the regulation of securities offerings. This uniformity would reduce burdens and costs on the capital formation process, given that state regulation of these transactions would be greatly reduced.[49]

The qualified purchaser definition should reduce the regulatory burdens on companies that seek to raise capital, without compromising investor protection. First, the definition should increase issuers' ability to offer and sell securities without state registration. Second, a nationwide, uniform definition of qualified purchaser would override diverse state exemptions for financially sophisticated investors. The federal definition permits issuers to conduct offerings in several states without having to comply with different state exemptions. This uniformity would simplify the securities registration and offering process, and possibly cause more companies to sell their securities to accredited investors because of the smaller burdens upon and costs of capital formation. It also promotes capital formation by permitting issuers to conduct offerings in more states.

Your comments are invited on this proposed approach in defining qualified purchasers. Should the definitions of accredited investor and qualified purchaser under the Securities Act be the same? Are there reasons for us to develop different definitions? If so, what are they?

A. Effects of Proposed Qualified Purchaser Definition

1. State Preemption

With the objective of streamlining the registration process, Congress intended to preempt the states in offers and sales to qualified purchasers in securities offerings registered or exempt from registration under the Securities Act.[50] Accordingly, the qualified purchaser definition would apply in registered offerings and in all exempt offerings.

In April 1997, the North American Securities Administrators Association, Inc. (''NASAA'') adopted the Model Accredited Investor Exemption (''MAIE''). Offerings made exclusively to accredited investors, as defined by Rule 501 of Regulation D under limitations and specified conditions established in MAIE, are exempt from state registration.[51] Forty states have adopted the provision or some variation of it exempting accredited investor transactions.[52] As a result, the coordination of the qualified purchaser definition with accredited investor would have little effect on the registration programs of many states and would work to enforce uniformity here by eliminating variations in state provisions.[53] Further, it will implement Congress' intent that states cease the review of registration statements for transactions involving qualified purchasers.

We solicit comment on the potential impact of our proposal on state law. MAIE contains conditions and restrictions not included in our proposed definition. The preemption however would apply to all transactions involving accredited investors. Your comments should address any implications the preemption would have on the states' ability to regulate generally, for example, intrastate offerings and secondary transactions.

Under the proposed definition, issuers would be able to offer and sell securities to qualified purchasers without compliance with state registration requirements and, in the same offering, register with the states or rely on state exemptions in offers and sales to non-qualified purchasers.[54] For example, an issuer whose securities are quoted on the Nasdaq SmallCap market could conduct a private securities offering exempt from federal registration under Section 4(2) of the Securities Act, but not satisfying the Rule 506 safe harbor requirements.[55] At the state level, the issuer could offer and sell securities to qualified purchasers privately in any state it wishes without either registration or reliance upon any state exemption. Also, the issuer could offer and sell securities in the same offering to non-qualified purchasers in any state where the offering satisfies a state exemption, such as a limited offering exemption or isolated purchaser exemption.[56] If the same issuer desired to register a securities offering with the Commission, one not otherwise preempted from state regulation, it could offer and sell to qualified purchasers in any state without registration or exemption. At the same time, if the issuer desired to include non-qualified purchasers in the same offering, it could register or rely on an available state exemption for offers and sales to those purchasers.

Congress preserved the states' authority to investigate and bring enforcement actions for fraud or unlawful conduct by broker-dealers.[57] States also are permitted to require notice filings in certain instances and require filings of consent to service of process. States may also collect any associated fees with such filings.[58]

2. Interaction With Rule 504 Public Offering Exemption

Rule 504 of Regulation D provides an exemption from registration for securities offerings up to $1 million made by non-reporting companies.[59] An offering under Rule 504 may be either public or private in nature. An issuer doing an offering publicly under Rule 504 has two significant advantages: it may generally solicit and advertise in the offering, and the securities it issues are freely tradeable. A Rule 504 public offering depends upon state oversight. In order to enjoy the benefits of a public offering an issuer must register with the states where the offering is conducted, or, in the alternative, the issuer must rely on a state exemption that permits public offerings exclusively to accredited investors. If the issuer neither registers nor relies on the accredited investor exemption at the state level, its Rule 504 offering must be conducted privately. As a result, the issuer cannot generally advertise or

(8) Any entity where all of the equity owners are accredited investors.

The rule also covers persons the issuer reasonably believes come within any of the foregoing descriptions at the time of sale.

[49] In keeping with the legislative purpose cited in the Senate Report, the uniformity of these definitions would reduce the confusing and conflicting nature caused by the overlapping and costly federal and state registration processes. See Senate Report at 2.

[50] See Senate Report at 32.

[51] CCH NASAA Reporter Para 361. MAIE restricts subsequent resales for 12 months after issuance, except to other accredited investors. Also, written solicitations may consist of a 25-word description of the issuer's business, but is limited to a kind of ''tombstone ad.'' MAIE is a NASAA guideline; in order to establish a functional exemption, state legislative or regulatory action is necessary.

[52] Therefore, 10 states have no special exemptive provision related to accredited investor purchases.

[53] The Senate Report notes that the bill ''codifies another exemption existing in most states—the preemption from state 'blue sky' registration for offers and sales to qualified purchasers.'' Senate Report at 15.

[54] The House Report states, ''the qualified purchaser provision allows State preemption, State exemptions and State registrations to be tacked together to comply with State requirements. Thus, sales to qualified purchasers would qualify for preemption without regard to whether, in the same offering, offers and sales are also made to non-qualified purchasers.'' House Report at 32.

[55] If the issuer complies with the requirements of the Rule 506 safe harbor in the offering, the securities would be covered securities for that reason alone, and the states would be preempted from regulating the offering.

[56] Of course, to rely on the Section 4(2) exemption federally, the issuer cannot conduct a public offering in any state.

[57] 15 U.S.C. 77r(c)(1).

[58] 15 U.S.C. 77r(c)(2)(A). States may not, however, assess fees for any nationally traded securities. See Section 18(c)(2)(D) [15 U.S.C. 77r(c)(2)(D)].

[59] See Rule 504(A) of Regulation D [17 CFR 230.504(a)].

solicit in the offering and the securities issued in the offering are restricted and not freely tradeable.

We are concerned about one implication of preempting state regulation of transactions involving accredited investors: the accredited investor prong of the Rule 504 public offering exemption may no longer be usable. By preempting transactions with qualified purchasers from state registration requirements, we would make state accredited investor exemptions a nullity.[60] Accordingly, we propose as a first step to rescind Rule 504(b)(1)(iii) if the proposed definition of qualified purchaser is adopted. We ask whether the state accredited investor exemption prong can or should be retained because states use definitions different than the Commission's definition of accredited investor. If the provision should be retained, describe the transactions it would continue to cover.

We are concerned, nonetheless, that if we adopt the proposed definition, issuers, especially small ones, might be disadvantaged in their ability to raise capital under Rule 504 because they would no longer be able to publicly offer securities to accredited investors by relying on the availability of a state exemption. It is not our intention to change the existing ability of issuers to reach investors under Rule 504. Would our proposed definition of qualified purchaser significantly restrict small businesses' access to capital since these issuers could not generally solicit and advertise to find accredited investors?

We are considering two alternative approaches to preserving the ability of issuers to offer and sell to accredited investors without the need to register the offerings—exclude accredited investors purchasing in public Rule 504 offerings from the definition of qualified purchaser, or create a new, uniform federal accredited investor exemption, either with or without conditions. We seek comment on these two approaches and any other approach that preserves this capital-raising mechanism without jeopardizing investor protection.

As a first approach, we ask whether offerees and purchasers in public Rule 504 offerings who fall within the accredited investor exemption(s) of the relevant state(s) should be excluded from the qualified purchaser definition and therefore from the preemption. If we do this, state registration of these offerings would not be preempted for the purpose of Rule 504 and Rule 504 offerings could continue to be made in reliance on the state accredited investor exemptions.[61] The benefits that inure to investors and states from state regulation of public Rule 504 offerings would be unchanged. We solicit comment on whether maintaining this benefit justifies the cost to those raising capital. Would there be new or additional costs and benefits through this approach?

We are also considering a second approach to the interaction between the qualified purchaser definition and public Rule 504 offerings. Under this second approach, the accredited investor prong of Rule 504 would be replaced with a uniform, federal exemption from Securities Act registration that substantially replicates the current state exemptions, as represented, for example, by MAIE.[62] Rule 504 therefore would continue to be available for public offerings and sales to accredited investors, but pursuant to federal rather than state regulation. We want to preserve the ability of small businesses to raise up to $1 million of capital in offerings to accredited investors. We solicit comment on how, in conjunction with defining qualified purchaser as proposed, we can be helpful to small businesses raising capital and not undermine investor protections.

We contemplate that if we adopted this second approach, the exemption could impose conditions similar to those found in MAIE and in typical state accredited investor exemptions. These would include limits on the extent to which general solicitation may be used, for example, not permitting written public communications except for tombstone ads containing a brief description of the issuer's business (25 words or less), name, address, telephone number, brief description of the securities to be sold, type, number and aggregate dollar amount of securities to be sold and the name, address and telephone number of a contact person. Do these conditions make sense for a federal exemption? Are there additional or alternative conditions we should impose? Would a legend indicating that the securities are being offered and sold solely to accredited investors pursuant to an exemption from federal registration requirements be needed? Are other cautionary legends necessary? Should certain types of issuers, in addition to those currently ineligible to use Rule 504, be excluded, such as those within the scope of disqualification provisions like Rule 262[63]? Is it necessary to be this restrictive? Should any free writing be permitted? MAIE also limits the extent to which securities may be resold, not permitting resales within a year except to other accredited investors. Is it necessary to impose resale restrictions, or should securities purchased under the exemption be freely tradeable?

Finally, we solicit comment on the interaction of the qualified purchaser definition with another aspect of Rule 504—the exemption for public offerings that are registered or qualified with the states.[64] The preemption of accredited investor transactions also reaches these offerings to the extent offers and sales involve such investors, raising the same concerns we have with state accredited investor exemptions. The states would no longer be permitted to register or review any accredited investor transactions. We believe, however, that if an issuer registers with a state an offering targeted to both accredited and non-accredited investors, the exemption under Rule 504 should continue to be available. Otherwise, issuers would be unduly restricted in their ability to raise capital in a state-registered offering including accredited investors. In order to make this clear, should the definition of qualified purchaser exclude purchasers in state-registered offerings? Should we also include these accredited investor transactions within any federal exemption we might develop, as suggested above? Would it be appropriate to permit both parts of the Rule 504 public exemption to work in tandem? For example, should a state-registered offering to non-qualified purchasers be permitted contemporaneously with a public tombstone ad solicitation to qualified purchasers?

B. The Proposed Definition and the Legislative History

The legislative history of NSMIA makes it clear that Congress intended to preempt state registration in offers and sales to financially sophisticated investors for the purpose of providing a nationwide, uniform definition, thereby eliminating the variations found among the states.[65]

[60] Where state accredited investor exemptions use definitions different from the one contained in Rule 501(a), states could continue to regulate transactions with such investors.

[61] Private Rule 504 offerings would not be affected by the proposed preemption because the availability of the exemption does not depend on state regulation. Therefore, isssuers could continue to make private Rule 504 offerings to accredited investors regardless of the approach adopted with respect to public Rule 504 offerings.

[62] See note 51 above.

[63] These are the so-called ''bad body'' disqualification provisions used under the Regulation A exemption. 17 CFR 230.262.

[64] Rule 504(b)(1)(i) and (ii).

[65] House Report at 31. (''First, many States currently exempt such securities from registration

The House Commerce Committee gave two other reasons for preempting offers and sales of securities to qualified purchasers from state registration requirements.[66] The Committee noted that certain securities are ''fundamentally national in character and generally (though not always) subject to regulation at the Federal level.''[67] The Committee said it expected us to define qualified purchaser to include purchasers of these fundamentally national securities. The Committee listed mortgage-backed, asset-backed and other structured securities, and securities issued in connection with project financings as examples of fundamentally national securities. Other language in the House Report makes clear that the primary factor for our consideration in defining qualified purchaser must be the financial sophistication of these investors. The House Report states ''[i]n all cases, however, the Committee intends that the Commission's definition be rooted in the belief that ''qualified purchasers'' are sophisticated investors, capable of protecting themselves in a manner that renders regulation by State authorities unnecessary.''[68]

Although Section 18 expressly permits us to define qualified purchaser differently with respect to different categories of securities, the proposal is to define qualified purchaser the same regardless of the nature of the security being offered or sold. For instance, there is no limitation in the proposed definition to only offerees and purchasers of ''fundamentally national'' securities. We believe that the nature of the investor rather than the investment is the critical feature in the determination of whether transactions with qualified purchasers should be exempt from state registration. Your views and comments are requested on this approach. Should the definition be restricted to include investors in certain securities only? How would a definition of ''fundamentally national'' securities be formulated, consistent with the direction to limit the definition to financially sophisticated persons? Should only certain kinds of securities be included, such as debt securities, or both debt and equity securities? Please describe the criteria that these securities should meet and explain why these criteria are necessary. Should certain types of securities be excluded? For example, should all securities that are considered ''penny stock'' under the Exchange Act be excluded?[69] Should securities issued in initial public offerings be excluded? Should certain types of securities registered with the Commission, such as asset-backed ones, and offered and sold pursuant to effective registration statements be deemed to be ''covered securities'' under the qualified purchaser rubric?

Are there segments of offerings that are so essentially national that they should be construed in a way to preempt state regulation and registration, i.e., the offer but not the sale? For example, under Rule 254 of Regulation A,[70] an issuer is permitted to make a public solicitation to determine whether there would be any interest in a proposed securities offering before incurring the expense of developing the required offering materials. In this way, federal regulation provides an offer exemption pursuant to Regulation A, but regulates, in a different way, other later offers and sales. Could the offer pursuant to this Commission exemption be deemed to be made to qualified purchasers so that it would be preempted from state regulation, even though other later offers and the sale might have to be state qualified? Are there other situations where this approach might be appropriate?[71] Are there particular conditions that should be applicable to deregulate a particular offer but not the sale; or vice versa?

Should issuer requirements be imposed? For example, should the issuer be a reporting company under the Exchange Act that has filed its reports for a specified period of time on a timely basis? Should the issuer meet specified asset or revenue tests? Should certain issuers be disqualified, such as issuers that are ''blank check'' companies,[72] or that have past securities laws violations?

What criteria should be applied to ensure that investors in these securities are financially sophisticated? Is the nature of these securities such that no additional investor-specific criteria are needed? Should securities be classified in some other manner and then have qualified purchasers defined differently based on those classes? If so, what classifications should be made and why? How should qualified purchasers be defined differently based on those classes?

III. Request for Comment

We request your comments on the proposal and on the matters discussed in Sections IV through VII, including the application of the Paperwork Reduction Act, the preliminary analysis of costs and benefits and effects on competition, and the Initial Regulatory Flexibility Analysis. Comment is solicited from the point of view of both issuers and investors, as well as facilitators of capital formation, such as underwriters and placement agents, and other regulatory bodies, such as state securities regulators.

IV. Paperwork Reduction Act

We have not prepared a submission to the Office of Management and Budget under the Paperwork Reduction Act of 1995[73] because the proposed rule does not impose recordkeeping or information collection requirements, or other collections of information requiring the approval of the Office of

requirements, but the qualification standard can vary from State to State. This provision will result in uniform national rule for qualified purchasers, which should greatly facilitate the ability of issuers to use it.'')

In addition to the variations among accredited investor exemptions, many sates provide separate exemptions from registration for offers and sales to institutional investors, such as banks, savings institutions, trust companies, insurance companies, investment companies, pension or profit-sharing trust, and dealers, but the states have various exemptions for other types of financially sophisticated investors.

Most states have adopted the exemption included in the 1956 Uniform Securities Act (''1956 USA''). The 1956 USA is a model state securities law statute drafted by the National Conference of Commissioners on Uniform State Laws. About 37 states have adopted part or all of that Act. Section 402(b)(8) of the 1956 USA exempts offers or sales to ''a bank, savings institution, trust company, insurance company, investment company as defined in the Investment Company Act of 1940, pension or profit-sharing trust, or other financial institution or institutional buyer, or to a broker-dealer, whether the purchaser is acting for itself or in some fiduciary capacity.'' Some states have adopted a modified version of the 1956 exemption, some states use the exemption contained in the 1985 Revised Uniform Securities Act (''1985 USA''), and other states have unique institutional investor exemptions. The 1985 USA is a revised version of the model state securities law act drafted by the National Conference. It has been adopted in full or in part by nine jurisdictions.

[66] See House Report at 31.

[67] *Id.*

[68] *Id.* The House Report noted that trusts or other special purpose vehicles that offer asset-backed, mortgage-backed or other structured securities generally are unable to list on the national markets. Consequently, their securities would not qualify for state preemption as national market securities. By preempting offers and sales to qualified purchasers, Congress intended to provide these issuers with a way to avoid state securities registration.

[69] See Exchange Act Rule 3a51–1 [17 CFR 240.3a51–1].

[70] 17 CFR 230.254. A free writing is permitted, but it must identify the issuer's chief executive officer and the business and products of the company and must indicate that no money is being solicited and will not be accepted and that the offer involves no obligation or commitment of any kind. The material is subject to the Commission's anti-fraud provisions.

[71] See, e.g., Securities Act Rule 701 [17 CFR 230.701] where offers are exempt and only sales are subject to specified regulatory requirements.

[72] See Section 7(b) of the Securities Act [15 U.S.C 77g(b)]; Securities Act Rule 419(a)(2) [17 CFR 230.419(a)(2)].

[73] 44 U.S.C. 3501 et seq.

Management and Budget. (We note that, if adopted, the definition would reduce the paperwork burden imposed by state registration requirements. We do not impose these requirements and they are not otherwise subject to the Paperwork Reduction Act.)

V. Cost-Benefit Analysis

Congress realigned the federal and state regulatory partnership to promote investment, eliminate duplicative regulation, decrease the cost of capital, and encourage competition, while protecting investors. Consistent with legislative intent and the protection of investors, the proposals would benefit companies and their investors in a number of ways.

We believe that the proposed qualified purchaser definition would reduce costs for issuers by expanding the number of investors to whom issuers may offer and sell securities without complying with state registration requirements. The proposal also would eliminate the need for issuers to comply with different state exemptions for financially sophisticated investors. This nationwide uniform definition would permit issuers to expand the geographic scope of their offerings. These effects should facilitate the capital formation process. These benefits are difficult to quantify.

It appears that a consequence of our proposed definition will be a reduction in state registration and other transaction-related fees. This result is a product of the Congressional directive to include as a ''covered security'' preempted from state registration, transactions with qualified purchasers.

There also may be a cost to investors through the loss of the benefits of state registration and oversight, although this cost is also difficult to quantify. In addition, we do not think this cost will be significant for the following reasons. The proposed qualified purchaser definition should not reduce investor protection. It is designed to encompass only those financially sophisticated investors who are considered to have access to information and fend for themselves. Transactions with these persons are currently exempt from federal registration under specified conditions as well as many state laws. We are not aware of any diminution in investor protection as a result of our current definition of accredited investor. They do not benefit from state regulation in a way that justifies the costs to the issuers subject to state registration requirements. To fully evaluate the benefits and costs associated with the proposed new qualified purchaser definition and the revised accredited investor definition, we request commenters to provide views and supporting information as to the costs and benefits associated with these proposals. We request comments on any potential costs to the states from adopting this particular definition (being mindful that Congress assumed there would be some cost from preempting transactions with qualified purchasers.)

VI. Initial Regulatory Flexibility Analysis

We have prepared this Initial Regulatory Flexibility Analysis under 5 U.S.C. § 603 concerning the rule proposed today.

A. Reasons for and Objectives of the Proposed Action

The proposed rule would comply with the mandate of NSMIA to preempt from state securities registration and regulation transactions involving qualified purchasers. That Act makes these transactions ''covered securities,'' which are not subject to certain state ''blue sky'' law provisions. We were delegated the responsibility to determine the meaning of the term ''qualified purchaser.'' In accordance with legislative direction, the proposed definition needs to be based upon the financial sophistication of the investors who should not need the protections offered by state registration and review. We have therefore proposed, for purposes of defining qualified purchasers, our existing definition of accredited investor contained in Rule 501(a), which uses an objective standard and has been in operation for about 20 years.

B. Small Entities Subject to the Rule

The proposed rule addition would exempt small entities from complying with state registration and review requirements in offering securities to qualified purchasers. The proposal would affect small entities that are offering securities under the Securities Act and small entities that invest in securities.

For purposes of the Regulatory Flexibility Act, the Securities Act defines a ''small business'' issuer, other than an investment company as one that on the last day of its most recent fiscal year had total assets of $5 million or less and is engaged in or proposes to engage in an offering of securities of $5 million or less. When used with respect to an investment company, the term is defined as one with any related investment company having aggregate net assets of $50 million or less at the end of its most recent fiscal year.

We are currently aware of approximately 2,500 reporting companies that are not investment companies with assets of $5 million or less. There are approximately 400 investment companies that satisfy the ''small entity'' definition. This proposal would only affect these small entities that offer securities in states that do not currently exempt offerings to accredit investors from state registration requirements. We have no reliable way to determine how many businesses may become subject to our reporting obligations in the future, or may otherwise be impacted by the change in state oversight of financing transactions.

''Accredited Investor'' also includes broker/dealers, investment advisors and investment companies as investors. Many of them are small. These entities would be accredited investors and would be able to be offered and sold offerings without state registration. We do not know how many of these entities would purchase securities in these transactions.

C. Reporting, Recordkeeping, and Other Compliance Requirements

The proposed rule would not impose any new reporting, recordkeeping or compliance requirements. In fact, the proposed rule would, pursuant to Congressional directive, remove state law requirements for the registration of offers and sales to certain entities.

D. Significant Alternatives

The Regulatory Flexibility Act directs us to consider significant alternatives that would accomplish the stated objectives, while minimizing any significant adverse impact on small issuers. In connection with the proposed rule, we considered several alternatives, including:

- Establishing different compliance and reporting requirements or timetables that take into account the resources of small businesses;
- Clarifying, consolidating or simplifying compliance and reporting requirements under the rule for small businesses;
- Using performance rather than design standards; and
- Exempting small businesses from all or part of the requirements.

The proposed rule would reduce the burden of complying with state securities laws for both large and small businesses. Because the proposal reduces burdens on securities issuers, we believe it is advantageous to small issuers to include them, rather than exclude them. Further, we are not aware of any alternative that would increase

the benefit of this proposal for small entities.

The Securities Act prohibits the states from requiring the registration of securities transactions with qualified purchasers. Consequently, the states may not review or comment on the disclosure provided to qualified purchasers, nor apply standards with respect to the merits of the offering or impose conditions on offerings to qualified purchasers. Removing these costs should facilitate capital raising.

We believe that preempting state regulation of transactions involving qualified purchasers who we define the same as accredited investors may make state accredited investor exemptions a nullity. In this case, the accredited investor prong of the Rule 504 public offering exemption may no longer be usable. We are concerned, however, that as a result, issuers, especially small ones, might be disadvantaged in their ability to raise capital by publicly offering their securities to accredited investors. Consequently, we have invited comment on the issue and to see if it would be better to provide limited relief from our proposed preemption for these public Rule 504 transactions. We also have solicited comment on an alternative approach that would replace the accredited investor prong with a new exemption for offerings to qualified purchasers.

We believe that design standards of objectively defining qualified purchasers add certainty and promote the purposes of the rule. We therefore do not propose performance standards to specify different requirements for small entities. We do not believe that it is feasible to further clarify, consolidate or simplify the proposed rule for small entities.

E. Overlapping or Conflicting Federal Rules

We do not believe any current federal rules duplicate, overlap or conflict with the rule we propose to amend.

F. Solicitation of Comments

We encourage the submission of written comments with respect to any aspect of this initial regulatory flexibility analysis. Such written comments will be considered in the preparation of the final regulatory flexibility analysis, if the proposed rule amendment is adopted. Persons wishing to submit written comments should follow the instructions contained in the beginning of this release. We particularly seek comment on:

- The number of small entities that would be affected by the proposed rule;
- The expected impact of the proposal;
- How to quantify the number of small entities that would be affected by, and how to quantify the impact of the proposed rule.

We ask commenters to describe the nature of any impact and provide empirical data supporting the extent of the impact.

VII. Promotion of Efficiency, Competition, and Capital Formation

We request your comment on whether the proposed amendment would be a ''major rule'' for purposes of the Small Business Regulatory Enforcement Fairness Act of 1996. We request comments on whether the proposed amendment is likely to have a $100 million or greater annual effect on the economy. Your comments should provide empirical data to support your views.

We are required to define qualified purchaser consistent with the public interest and the protection of investors. When the public interest is considered, we must determine whether the definition selected would promote efficiency, competition and capital formation, in addition to investor protection.[74] As described in this release, we believe the proposal fosters each of these important goals. We request your comments on how our proposals would affect each of these objectives.

VIII. Statutory Basis

We propose an amendment to Rule 146 under the authority set forth in Sections 2(b), 18(b) and 19 of the Securities Act.

IX. Text of the Amendments

List of Subjects in 17 CFR Part 230

Securities.

In accordance with the foregoing, Title 17, Chapter II of the Code of Federal Regulations is proposed to be amended as follows:

PART 230—GENERAL RULES AND REGULATIONS, SECURITIES ACT OF 1933

1. The authority citation for Part 230 continues to read in part as follows:

Authority: 15 U.S.C. 77b, 77c, 77d, 77f, 77g, 77h, 77j, 77r, 77sss, 77z–3, 78c, 78d, 78*l*, 78m, 78n, 78o, 78t, 78w, 78*ll*(d), 78mm, 79t, 80a–8, 80a–24, 80a–28, 80a–29, 80a–30, and 80a–37, unless otherwise noted.

* * * * *

[74] See Section 2(b) of the Securities Act (15 U.S.C. 77b(b)).

2. Section 230.146 is amended by adding paragraph (c) to read as follows:

§ 230.146 Rules under section 18 of the Act.

* * * * *

(c) *Qualified Purchaser.* A ''qualified purchaser'' as used in Section 18(b)(3) of the Act (15 U.S.C. 77r(b)(3)) means any accredited investor as defined in § 230.501(a).

3. Section 230.504 is amended by:

a. Adding ''or'' at the end of paragraph (b)(1)(i);

b. Removing ''; or'' at the end of paragraph (b)(1)(ii) and adding in its place a period; and

c. Removing paragraph (b)(1)(iii).

By the Commission.

Dated: December 19, 2001.

Margaret H. McFarland,

Deputy Secretary.

[FR Doc. 01–31742 Filed 12–26–01; 8:45 am]

BILLING CODE 8010–01–U

DEPARTMENT OF THE INTERIOR

Bureau of Indian Affairs

25 CFR Part 292

RIN 1076–AD93

Gaming on Trust Lands Acquired After October 17, 1988

AGENCY: Bureau of Indian Affairs, Interior.

ACTION: Proposed rule: reopening of comment period.

SUMMARY: This notice reopens the comment period for the proposed rule that was published in the **Federal Register** on September 14, 2000.

EFFECTIVE DATE: Comments must be received on or before February 25, 2002.

ADDRESSES: Mail comments to George Skibine, Director, Office of Indian Gaming Management, Bureau of Indian Affairs, 1849 C Street NW, MS 2070–MIB, Washington, DC 20240. Comments may be hand delivered to the same address from 9 a.m. to 4 p.m., Monday through Friday or sent by facsimile to 202–273–3153.

FOR FURTHER INFORMATION CONTACT: Nancy Pierskalla, Office of Indian Gaming Management, 202–219–4066.

SUPPLEMENTARY INFORMATION: On September 14, 2000, the Bureau of Indian Affairs published a proposed rule (65 FR 55471) concerning Gaming on Trust Lands Acquired After October 17, 1988. The deadline for receipt of comments was November 13, 2000. Six comments were received after

November 13, 2000. Several of these comments raise substantive issues that may result in modification of the proposed rule. The comment period is reopened to allow consideration of the comments received after November 13, 2000, and to allow additional time for comment on the proposed rule. Comments must be received on on before March 27, 2002.

This notice is published in accordance with the authority delegated by the Secretary of the Interior to the Assistant Secretary—Indian Affairs by 209 Department Manual 8.1.

Dated: December 11, 2001.

Neal A. McCaleb,

Assistant Secretary, Indian Affairs.

[FR Doc. 01–31664 Filed 12–26–01; 8:45 am]

BILLING CODE 4310–02–M

DEPARTMENT OF THE INTERIOR

Minerals Management Service

30 CFR Part 250

RIN 1010–AC95

Oil and Gas and Sulphur Operations in the Outer Continental Shelf—Document Incorporated by Reference—API 510

AGENCY: Minerals Management Service (MMS), Interior.

ACTION: Proposed rule.

SUMMARY: MMS is proposing to add a document to be incorporated by reference into our regulations governing oil and gas and sulphur operations in the Outer Continental Shelf (OCS). This revision will ensure that lessees use the best available and safest technologies while operating in the OCS. The new document, API 510, is titled ''Pressure Vessel Inspection Code: Maintenance Inspection, Rating, Repair, and Alteration.''

DATES: We will consider all comments we receive by February 25, 2002. We will begin reviewing comments then and may not fully consider comments we receive after February 25, 2002.

ADDRESSES: Mail or hand-carry comments (three copies) to the Department of the Interior; Minerals Management Service; Mail Stop 4024; 381 Elden Street; Herndon, Virginia 20170–4817; Attention: Rules Processing Team. If you wish to e-mail comments, the e-mail address is: rules.comments@mms.gov. Reference API 510 in your e-mail subject line. Include your name and return address in your e-mail message and mark your message for return receipt.

FOR FURTHER INFORMATION CONTACT: Richard Ensele, Operations Analysis Branch, at (703) 787–1583.

SUPPLEMENTARY INFORMATION: We use standards, specifications, and recommended practices developed by standard-setting organizations and the oil and gas industry for establishing requirements for activities in the OCS. This practice, known as incorporation by reference, allows us to incorporate the provisions of technical standards into the regulations without increasing the volume of the Code of Federal Regulations (CFR). The legal effect of incorporation by reference is that the material is treated as if it was published in the **Federal Register**. This material, like any other properly issued regulation, then has the force and effect of law. We hold operators/lessees accountable for complying with the documents incorporated by reference in our regulations. The regulations found at 1 CFR part 51 govern how MMS and other Federal agencies incorporate various documents by reference. Agencies can only incorporate by reference through publication in the **Federal Register**. Agencies must also gain approval from the Director of the Federal Register for each publication incorporated by reference. Incorporation by reference of a document or publication is limited to the specific edition or specific edition and supplement or addendum cited in the regulations.

The proposed rule will incorporate by reference into MMS regulations the provisions of API 510.

We have reviewed this document and have determined that the latest edition should be incorporated into the regulations to ensure the use of the best available and safest technologies.

MMS's Review Concerning Pressure Vessels

The MMS documents incorporated by reference currently include three sections of the American Society of Mechanical Engineers (ASME) 1998 Boiler and Pressure Vessel Code:

Section I— Rules for the Construction of Power Boilers;

Section IV—Rules for the Construction of Heating Boilers; and

Section VIII—Rules for the Construction of Pressure Vessels.

Each of these sections provides requirements applicable to the design, fabrication, inspection, testing, and certification of newly constructed boilers and pressure vessels. The ASME Code has been the recognized standard for the construction of new boilers and pressure vessels since the early 1900's. The ASME Code does not, however, address the maintenance inspection, rating, repair, and alteration of pressure vessels after the vessels are placed into service.

MMS has not previously included in its documents incorporated by reference a standard on pressure vessel maintenance inspection, rating, repair, and alteration. Our review of the document proposed for incorporation into MMS regulations, API 510, indicates that it would be beneficial to us and to the offshore industry to clarify requirements on pressure vessel operations, inspections, repairs, and maintenance of the pressure vessels in service on the OCS.

In December 1931, ASME and the American Petroleum Institute (API) created a joint committee to consider safe practices in the design, construction, inspection, and repair of pressure vessels used in the oil and gas industry. The resulting API/ASME Code remained in effect until discontinued in 1956. Since the need for uniform maintenance, inspection, and repair of pressure vessels continued, API published the first edition of API 510 in 1958 to satisfy this need.

Another set of boiler and pressure vessel requirements exists, which is widely used or referenced by many states and municipalities in their regulations. It is the National Board Inspection Code (NBIC). Many elements of the discontinued API/ASME Code have been included in the NBIC since its 1960 edition. It is the intention of both API and NBIC that their respective scopes not overlap. NBIC advises in its scope that ''It is recognized that an American Petroleum Institute Inspection Code, API–510, exists covering the maintenance inspection, repair, alteration and re-rating procedures for pressure vessels used by the petroleum and chemical process industries, which is applicable in these special circumstances. It is the intent that this Inspection Code cover installations other than those covered by API–510 unless the jurisdiction rules otherwise.''

NBIC is an excellent generic code applicable to boilers and pressure vessels in general industrial uses. API 510 is designed specifically for the petroleum and chemical process industries. Therefore, API 510 is the appropriate document to provide for the safest maintenance inspection, rating, repair, and alteration of pressure vessels in service on the OCS.

Procedural Matters

Public Comments Procedure

Our practice is to make comments, including names and home addresses of respondents, available for public review during regular business hours. Individual respondents may request that we withhold their home address from the rulemaking record, which we will honor to the extent allowable by law. There may be circumstances in which we would withhold from the rulemaking record a respondent's identity, as allowable by the law. If you wish us to withhold your name and/or address, you must state this prominently at the beginning of your comment. However, we will not consider anonymous comments. We will make all submissions from organizations or businesses, and from individuals identifying themselves as representatives or officials of organizations or businesses, available for public inspection in their entirety.

Background

This proposed rulemaking will add a document to those incorporated by reference in the regulations. The addition of API 510, dealing with maintenance inspection, rating, repair, and alteration of the various pressure vessels in use on the OCS, to the documents incorporated by reference in our regulations will have a minor impact on the entire industry. The maintenance and repair of pressure vessels has been an ongoing responsibility of the industry since the OCS program's inception. The inclusion of API 510, first published in 1958, will provide for uniform maintenance and inspection practices.

Regulatory Planning and Review (Executive Order 12866)

This document is not a significant rule and is not subject to review by the Office of Management and Budget (OMB) under Executive Order 12866.

(1) This rule will not have an effect of $100 million or more on the economy. It will not adversely affect in a material way the economy, productivity, competition, jobs, the environment, public health or safety, or State, local, or tribal governments or communities.

The rule would have no significant economic impact because the documents do not contain any significant revisions that will cause lessees or operators to change their business practices. The documents will not require the retrofitting of any facilities. The documents may lead to minimal changes in operating practices, but the associated costs will be very minor.

(2) This rule will not create a serious inconsistency or otherwise interfere with an action taken or planned by another agency.

(3) This rule does not alter the budgetary effects or entitlements, grants, user fees, or loan programs or the rights or obligations of their recipients.

(4) This rule does not raise novel legal or policy issues.

Regulatory Flexibility (RF) Act

The Department certifies that this rule will not have a significant economic effect on a substantial number of small entities under the RF Act (5 U.S.C. 601 *et seq.*). The provisions of this rule will not have a significant economic effect on offshore lessees and operators, including those that are classified as small businesses. The Small Business Administration (SBA) defines small business as having:

- Annual revenues of $5 million or less for exploration service and field service companies.
- Fewer than 500 employees for drilling companies and for companies that extract oil, gas, or natural gas liquids.

Under the North American Industry Classification System Code 211111, Crude Petroleum and Natural Gas Extraction, MMS estimates that a total of 1,380 firms drill oil and gas wells onshore and offshore. The group affected by this rule is the approximately 130 companies that are offshore lessees/operators. According to SBA criteria, 39 companies qualify as large firms, leaving up to 91 companies that may qualify as small firms with fewer than 500 employees. However, because of the extremely high cost and technical complexity involved in exploration and development offshore, the vast majority of lessees/operators that will be affected will be companies with larger revenues.

The API document proposed for incorporation into MMS regulations covers pressure vessels on offshore structures. Offshore structures can cost hundreds of millions of dollars to build and install. The document to be incorporated by this rule has been used by the industry for many years, and the latest edition represents the current state-of-the-art industry practices. Boilers and pressure vessels currently being built are being constructed according to the requirements in the ASME Code. Existing pressure vessel equipment is being inspected and maintained to the requirements of API 510. Additional costs, if any, are already accepted by the industry.

Your comments are important. The Small Business and Agriculture Regulatory Enforcement Ombudsman and 10 Regional Fairness Boards were established to receive comments from small businesses about Federal agency enforcement actions. The Ombudsman will annually evaluate the enforcement activities and rate each agency's responsiveness to small business. If you wish to comment on the enforcement actions of MMS, call toll-free (888) 734–3247.

Small Business Regulatory Enforcement Fairness Act (SBREFA)

This rule is not a major rule under 5 U.S.C. 804(2), SBREFA. This rule:

(a) Does not have an annual effect on the economy of $100 million or more. The proposed rule will not cause any significant costs to lessees or operators. The only costs will be the purchase of the new documents and minor revisions to some operating and maintenance procedures. The minor revisions to operating and maintenance procedures may result in some minor costs or may actually result in minor cost savings.

(b) Will not cause a major increase in costs or prices for consumers, individual industries, Federal, State, or local government agencies, or geographic regions.

(c) Does not have significant adverse effect on competition, employment, investment, productivity, innovation, or the ability of United States-based enterprises to compete with foreign-based enterprises.

Paperwork Reduction Act (PRA) of 1995

There are no information collection requirements associated with this rule. The DOI has determined that this regulation does not contain information collection requirements pursuant to PRA (44 U.S.C. 3501 *et seq.*) We will not be submitting an information collection request to OMB.

Federalism (Executive Order 13132)

According to Executive Order 13132, the rule does not have significant Federalism effects. This rule will not substantially and directly affect the relationship between the Federal and State Governments. This rule will simply add one additional document incorporated by reference to ensure that the industry uses the best and safest technologies. This rule does not impose costs on States or localities. Any costs incurred affect only the oil industry and will be minor.

Takings Implication Assessment (Executive Order 12630)

According to Executive Order 12630, this rule does not have significant Takings implications. A Takings Implication Assessment is not required.

Energy Supply, Distribution, or Use (Executive Order 13211)

This rule is not a significant rule and is not subject to review by the Office of Management and Budget under Executive Order 12866. The rule does not have a significant effect on energy supply, distribution, or use because it merely adds a new standard to be incorporated by reference that will provide for uniform maintenance and inspection practices. Thus, a Statement of Energy Supply, Distribution, or Use is not required.

Civil Justice Reform (Executive Order 12988)

According to Executive Order 12988, the Office of the Solicitor has determined that this rule does not unduly burden the judicial system and meets the requirements of sections 3(a) and 3(b)(2) of the Order.

National Environmental Policy Act (NEPA)

This rule does not constitute a major Federal action significantly affecting the quality of the human environment. A detailed statement under the NEPA of 1969 is not required.

Unfunded Mandates Reform Act (UMRA) of 1995

This rule does not impose an unfunded mandate on State, local, and tribal governments or the private sector of more than $100 million per year. The rule does not have a significant or unique effect on State, local, or tribal governments or the private sector. A statement containing the information required by the UMRA (2 U.S.C. 1531 *et seq.*), is not required.

List of Subjects in 30 CFR Part 250

Continental shelf, Environmental impact statements, Environmental protection, Government contracts, Incorporation by reference, Investigations, Mineral royalties, Oil and gas development and production, Oil and gas exploration, Oil and gas reserves, Penalties, Pipelines, Public lands—mineral resources, Public lands—rights-of-way, Reporting and recordkeeping requirements, Sulphur development and production, Sulphur exploration, Surety bonds.

Dated: December 3, 2001.

J. Steven Griles,

Acting Assistant Secretary, Land and Minerals Management.

For the reasons stated in the preamble, the Minerals Management Service proposes to amend 30 CFR Part 250 as follows:

PART 250—OIL AND GAS AND SULPHUR OPERATIONS IN THE OUTER CONTINENTAL SHELF

1. The authority citation for part 250 continues to read as follows:

Authority: 43 U.S.C. 1331 *et seq.*

2. In § 250.198, in the table in paragraph (e), a new entry for document API 510 is added in alphanumeric order to read as follows:

§ 250.198 Documents incorporated by reference.

* * * * *

(e) * * *

Title of document	Incorporated by reference at
* * * * * * *	
API 510, Pressure Vessel Inspection Code: Maintenance Inspection, Rating, Repair, and Alteration, Eighth Edition, June 1997, API Stock No. C51008.	§ 250.803(b)(1), (b)(1)(i); § 250.1629(b)(1), (b)(1)(i).
* * * * * * *	

4. In § 250.803, paragraph (b)(1) and the first sentence of paragraph (b)(1)(i) are revised to read as follows:

§ 250.803 Additional production system requirements.

* * * * *

(b) * * *

(1) *Pressure and fired vessels.* Pressure and fired vessels must be designed, fabricated, and code stamped in accordance with the applicable provisions of sections I, IV, and VIII of the American Society of Mechanical Engineers (ASME) Boiler and Pressure Vessel Code. Pressure and fired vessels must have maintenance inspection, rating, repair, and alteration performed in accordance with the applicable provisions of the American Petroleum Institute's Pressure Vessel Inspection Code: Maintenance Inspection, Rating, Repair, and Alteration (API 510).

(i) Pressure safety relief valves must be designed and installed in accordance with the applicable provisions of sections I, IV, and VIII of the ASME Boiler and Pressure Vessel Code, and must have maintenance inspection, rating, repair, and alteration performed in accordance with the provisions of API 510. * * *

* * * * *

5. In § 250.1629, paragraph (b)(1) and the first sentence of paragraph (b)(1)(i) are revised to read as follows:

§ 250.1629 Additional production and fuel gas system requirements.

* * * * *

(b) * * *

(1) Pressure and fired vessels must be designed, fabricated, and code stamped in accordance with the applicable provisions of sections I, IV, and VIII of the American Society of Mechanical Engineers (ASME) Boiler and Pressure Vessel Code. Pressure and fired vessels must have maintenance inspection, rating, repair, and alteration performed in accordance with the provisions of the American Petroleum Institute's Pressure Vessel Inspection Code: Maintenance Inspection, Rating, Repair, and Alteration (API 510).

(i) Pressure safety relief valves must be designed and installed in accordance with the applicable provisions of sections I, IV, and VIII of the ASME Boiler and Pressure Vessel Code, and must have maintenance inspection, rating, repair, and alteration performed in accordance with the applicable provisions of API 510. * * *

* * * * *

[FR Doc. 01–31710 Filed 12–26–01; 8:45 am]

BILLING CODE 4310–MR–P

DEPARTMENT OF THE INTERIOR

Minerals Management Service

30 CFR Part 250

RIN 1010–AC85

Oil and Gas and Sulphur Operations in the Outer Continental Shelf (OCS) Fixed and Floating Platforms and Documents Incorporated by Reference

AGENCY: Minerals Management Service (MMS), Interior.

ACTION: Notice of proposed rulemaking.

SUMMARY: We are proposing to amend our regulations to address floating offshore platforms that, until now, have not been expressly covered. These floating production systems (FPSs) are variously described as column-stabilized units (CSUs); floating production, storage and offloading facilities (referred to by industry as ''FPSOs''); tension-leg platforms (TLPs); spars, etc. We are also incorporating into our regulations a body of industry standards pertaining to FPSs, and this will save the public the costs of developing separate, and in many cases unnecessarily duplicative, government standards. However, it will increase costs to industry by making certain independent third-party reviews mandatory, particularly by requiring hazards analyses for all new FPSs.

DATES: We will consider all comments we receive by February 25, 2002. We will begin reviewing comments then and may not fully consider comments we receive after February 25, 2002.

ADDRESSES: If you wish to comment, you may submit your comments by any one of several methods. You may mail or hand-carry comments (three copies) to the Department of the Interior; Minerals Management Service; Mail Stop 4024; 381 Elden Street; Herndon, Virginia 20170–4817; Attention: Rules Processing Team. You may also comment via e-mail to rules.comments@mms.gov. Please submit e-mail comments as an ASCII file (MS Word) avoiding the use of special characters and any form of encryption. Include your name and return address in your e-mail message and mark your message for return receipt. Show the Rule Identification Number (RIN 1010–AC–85) in your subject line.

Mail or hand-carry comments with respect to the information collection burden of the proposed rule to the Office of Information and Regulatory Affairs; Office of Management and Budget; Attention: Desk Officer for the Department of the Interior (OMB control number 1010–XXXX); 725 17th Street, NW., Washington, DC 20503.

FOR FURTHER INFORMATION CONTACT: Carl Anderson, Physical Scientist, at (703) 787–1608; or Joseph Levine, Chief, Operations Analysis Branch, at (703) 787–1033 or FAX (703) 787–1555.

SUPPLEMENTARY INFORMATION: We propose incorporating into our regulations a body of industry standards pertaining to FPSs, and this will save the public the costs of developing Government standards. It will also enhance the efficient exploration and development of the most promising new sources of United States oil and gas supplies in the deepwater areas of the Gulf of Mexico (GOM).

Incorporating the now-voluntary industry standards into our regulations would dictate that respondents comply with the requirements in the incorporated documents. This includes certified verification agent (CVA) reviews and hazards analyses for some areas that current regulations do not require, but the voluntary standards recommend. Thus, the now-voluntary CVA reviews and hazards analyses would become mandatory. This would increase the number of CVA nominations and reports associated with the facilities and require hazards analysis documentation for new floating platforms. (In some of the industry standards, the CVA is referred to as an independent verification agent (IVA)). Also, industry sources estimate that it will cost an average of $1.2 million to apply hazards analysis to each new floating production facility. Requiring the industry hazards analysis standard for all new deepwater floating production platforms will be the most costly element of the proposed rule.

Deepwater areas of the GOM have shown a remarkable increase in oil and gas exploration, development, and production. In part this is due to the development of new technologies that (1) enable drilling and production in deeper waters; and (2) reduce operational costs and risks, such as new geophysical software used to identify highly productive reservoirs. In 1993, deepwater areas of the GOM (water depths greater than 1,000 feet, or 305 meters) accounted for only 12 percent and 2 percent, respectively, of total GOM oil and gas production. Discovery and development of deepwater fields began accelerating in 1994, so that by the end of 1999, deepwater areas of the GOM accounted for 45 percent and 17 percent, respectively, of total GOM oil and gas production. (From 1994 through 1998, deepwater production of oil rose 260 percent.)

To realize just how important the new deepwater areas of the GOM are to United States energy supplies, it is helpful to compare the productivity of deepwater wells to past wells in more shallow waters. Historically, GOM wells generally have produced between 200 and 300 barrels (bbls.) per day. However, at least one existing deepwater well is producing over 30,000 bbls. of oil per day, and several are producing over 20,000 bbls. per day. An existing deepwater platform in the GOM is producing 140,000 bbls. of oil and 140 million cubic feet of gas per day. Success in deepwater is evident in both the high production rates and sustained drilling for new discoveries announced each year. Drilling is expected to move into water depths of 10,000 feet (3,048 meters).

The following discussion is intended to give the reviewer an idea of how fast technological changes are occurring in deepwater oil and gas operations. It is also meant to establish the urgency for MMS to adopt common industry standards so that system designers will know what is acceptable when they plan for floating deepwater platforms. Any of the drilling or production ''records'' discussed below will likely be exceeded by the time this Notice is published. Several notable examples show how new deepwater exploration and production systems are ''leap-frogging'' the technical achievements of their recent predecessors.

As of December 2000, there were 40 rigs drilling in water depths greater than 305 meters (1,000 feet), versus 32 for December 1999. This represents a record number of rigs drilling in deepwater. Until now, about 100 deepwater discoveries have been announced for the GOM.

Concerning exploratory drilling in August 1998, Chevron U.S.A. set a GOM water-depth record in 7,718 feet of water (2,352 meters) on Atwater Valley Block 118, 175 miles southeast of New Orleans. But Chevron's record was recently exceeded, (1) in the GOM by Broken Hill Proprietary Petroleum, which drilled an exploratory well in 8,835 feet (2,693 meters) of water in the Walker Ridge area; and (2) offshore Brazil, where PetroBras set a new 9,111-foot (2,777-meter) world record.

Concerning production water-depth records, Petrobras holds the water-depth record for sustained production at their Roncador field in the Campos Basin with the Petrobras 36 column stabilized floating production system installed in 6,079 feet (1,853 meters) of water. Subsea wells tie back to Petrobras 36 in

6,560 feet (1,999 meters) of water, which is a world production depth record.

So far, only 21 permanent development platforms have been installed in waters over 1,000 feet deep (305 meters) in the GOM. Seven of these structures are fixed platforms, three are compliant towers, eight are TLPs, and three are spars. All of these production platforms were approved on a case-by-case basis under existing MMS regulations. However, it would streamline the permitting process and increase the up-front net-present-value of deepwater projects for the offshore industry if MMS had a designated body of standards to specifically deal with the whole new class of floating production platforms. The offshore oil and gas industry has already developed its own body of standards because of the recognized need to streamline the design process for floating platform facilities and their subsystems. In addition to describing the primary platform facilities, the industry standards also govern production and pipeline risers, stationkeeping and mooring systems, flexible pipelines, and hazards analysis.

A discussion of the expense involved in exploring for and developing deepwater oil and gas reserves was presented at the World Petroleum Congress (WPC) in Calgary, Canada, in June 2000. According to the ''Oil & Gas Journal,'' Mr. Luiz Rodolfo Landim Machado of Petroleo Brasileiro SA projected that through 2004, the oil industry would spend about $76 billion in deepwater areas worldwide to explore for and develop about 19 billion barrels of oil equivalent. He indicated that about 27 percent of the reserves would be found in the GOM. (''WPC: Deepwater holds industry's greatest challenges, opportunities,'' Vol. 98, Issue 26 (June 26, 2000).) Assuming a commensurate expenditure of 27 percent, that would lead to the oil industry spending $20.5 billion in deepwater areas of the GOM through 2004. That represents industry deepwater expenditures of over $4.5 billion per year from June 2000 through 2004.

To provide further background on the potential impact of this proposal, leases lying in water depths of from 400 to 800 meters (from 1,312 to 2,625 feet) have lease terms of 8 years, as opposed to the customary 5-year term. Leases lying in water depth of over 800 meters (2,625 feet) have 10-year terms. These longer lease terms give lessees much longer time horizons to plan their lease development activities. Consequently, the MMS GOM Region estimates that about six FPSs will be approved for installation during any given year. This means that probably much fewer than even half of the approximately 98 companies currently holding leases in deepwater would ever submit development plans for a floating platform before their lease terms expire.

The Purpose of this Rule

The purpose of this proposed rule is to incorporate into our regulations a body of industry standards that will enable us to more efficiently examine plans for and issue permits for floating offshore platforms. Our regulations currently do not specifically cover these facilities. Therefore, this proposal includes a complete rewrite of subpart I of 30 CFR Part 250 to cover floating platforms. Incorporating the voluntary industry standards would save the public the cost of developing government-specific standards. It would also enhance the efficient exploration and development of the most promising new sources of United States oil and gas supplies in the deepwater areas of the GOM in two ways. First, it would provide more certainty to the lessees' design engineers so that they would know in advance what design criteria are acceptable to MMS. Second, it would enhance MMS engineers' efforts in reviewing each new project to ensure structural integrity, operational and human safety, and environmental protection. This is because the proposed regulation would establish a single body of standards on which each new project would be based. These enhancements would streamline the regulatory review process and, thereby, increase the net-present-value of the project to lessees that assume the high financial risks of developing deepwater areas. There can be considerable costs to the industry if revenues from the project are delayed while industry and government engineers haggle over acceptable standards for the project in question.

Under existing MMS regulations, lessees and operators have to use standards that are acceptable to MMS or they will not receive a permit to proceed with their development plans. If they do not choose to use standards that we have already incorporated, they have the option to use equivalent standards, provided they first obtain our approval.

Many industry standards reference ''second-tier documents'' that we do not directly incorporate into our regulations. Nevertheless, the fact that an industry standard relies on second-tier documents effectively makes them part of the justification for approving a permit. It is incumbent upon MMS and the certified verification agent (CVA) to make certain that referenced standards are properly followed. MMS has operated under this premise for years, and it has worked well. However, the system usually works more efficiently when an industry standard is directly incorporated by reference into our regulations. That way, lessees do not have to go through the steps of obtaining our approval for various standards prior to developing their plans. Also, it saves MMS time, because we do not have to conduct special reviews of certain industry standards with which we may be unfamiliar.

The 1996 National Technology Transfer and Advancement Act (NTTAA) (Pub. L. 104–113) directs Federal agencies to achieve greater reliance on voluntary standards and standards-developing organizations by participating in developing voluntary standards without dominating the process. The NTTAA encourages ''the use by Federal agencies of private sector standards, emphasizing where possible the use of standards developed by private, consensus organizations.'' This is for the purpose of ''eliminating unnecessary duplication and complexity in the development and promulgation of conformity assessment requirements and measures'' (i.e., standards and regulations). Office of Management and Budget (OMB) Circular A–119 specifies the requirements for Federal agencies to implement the NTTAA. According to Circular A–119, agencies must use domestic and international voluntary consensus standards in their regulatory and procurement activities instead of government standards, unless use of consensus standards would be inconsistent with applicable law or otherwise impractical. Agencies have the discretion to decline to use existing voluntary consensus standards if they determine that such standards are inconsistent with applicable law or otherwise impractical.

In this proposed rulemaking, MMS intends to incorporate eight American Petroleum Institute (API) standards, and one American Welding Society (AWS) standard. In one case, we would be adopting the latest edition of an API standard already incorporated into MMS regulations. We have actively participated in developing several of these standards and believe that we could not write duplicative government regulations that would be either as technically detailed or as broad in their scope as these standards. Moreover, the writing of such duplicative government regulations could neither be done in a timely nor economically efficient way—nor could it be done with the same level of expertise that was involved in the

industry effort. We believe that it is entirely within the letter and spirit of the NTTAA that we incorporate these voluntary industry standards into our regulations. Moreover, we believe it is in the public interest that we so adopt these standards.

The nine industry standards proposed for incorporation are as follows:

(1) *API Recommended Practice 2A (API RP 2A)—WSD, Recommended Practice for Planning, Designing and Constructing Fixed Offshore Platforms—Working Stress Design; Twenty-First Edition, December 2000, API Order No. G2AWSD.* The 19th and 20th editions of this standard are already incorporated by reference into MMS regulations. The 21st edition would simply update and replace these two earlier editions. The 21st edition provides the rationale for revising much of subpart I—Platforms and Structures—in the proposed rulemaking. It deals with bottom-founded structures which, until this rulemaking, have been the primary focus of Subpart I. Upon the effective date of the final rule, the following National Notices to Lessees and Operators (NTLs) related to API RP 2A would be cancelled: (1) NTL No. 98–1N provides interim guidance for applying platform design criteria from API RP 2A; and (2) NTL No. 98–4N provides interim guidance for applying the ''Simplified Fatigue Analysis Procedure'' from API RP 2A. These two NTLs had been published in cooperation with the API RP 2A workgroup. The workgroup had discovered some insufficient design criteria in both the 19th and 20th editions of RP 2A related to various structures and the water depths in which they were to be constructed. Depending on the type of structure, either the 19th or 20th edition was the correct standard to be used. The NTLs provided guidance on the correct use of the standards.

(2) *API RP 2RD, Design of Risers for Floating Production Systems (FPSs) and Tension-Leg Platforms (TLPs), First Edition, June 1998, API Stock No. G02RD1.* This standard covers drilling, production, and pipeline risers associated with all FPSs, including spars, TLPs, CSUs, and FPSOs. Moreover, it deals with construction of flexible riser systems, which have not been explicitly covered under MMS regulations.

(3) *API RP 2SK, Recommended Practice for Design and Analysis of Stationkeeping Systems for Floating Structures, Second Edition, December 1996, Effective Date: March 1, 1997, API Stock No. G02SK2.* Again, stationkeeping systems for floating platforms have not been explicitly covered under MMS regulations.

(4) *API RP 2T, Recommended Practice for Planning, Designing, and Constructing Tension Leg Platforms, Second Edition, August 1997, API Order No. G02T02.* Over the past 13 years, every application for a TLP installation in the GOM OCS has relied on API RP 2T as the basis for its design. MMS has approved each of these applications on a case-by-case basis. There are now eight such installations in the deepwater areas of the GOM. For all practical purposes, API RP 2T is the de facto industry guideline on the design and construction of TLPs. In some areas, API RP 2T relies very heavily on the analysis contained in API RP 2A, particularly for environmental loading and foundation and anchoring factors. Considered by itself, API RP 2T imposes no new reporting requirements or third-party review requirements.

(5) *API RP 14J, Recommended Practice for Design and Hazards Analysis for Offshore Production Facilities, First Edition, Sept. 1, 1993, API Stock No. 811–07200.* Implementing this standard for all new deepwater floating production platforms will be the most costly element of the proposed rule. This is a standard that has provided much of the early rationale and background for MMS's voluntary Safety and Environmental Management Planning program. During 2000, a consensus was reached within the industry that the complexities and safety issues involved in FPSs warrant the imposition of this standard to all new FPSs, variously described as CSUs, TLPs, spars, and FPSOs, etc. Deepwater FPSs are the most complex systems on the OCS and can include numerous production wells that flow at over 20,000 barrels per day. Therefore, we have concluded that new floating production facilities should be assigned the highest priority for conducting hazards analysis. This analysis should follow one or more of the methods described in API RP 14J. Further, we believe it is most efficient to address potential safety and environmental hazards during the facility design phase. (Hazards analysis is much less useful and less cost-effective when applied to facilities that are already installed.) We would require an analysis of operational hazards to be included as integral parts of all Deepwater Operations Plans. Industry sources estimate that it will cost an average of $1.2 million to apply API RP 14J hazards analysis in the design of each new floating production facility.

(6) *API Specification (Spec) 17J, Specification for Unbonded Flexible Pipe, Second Edition, November 1999, Effective Date: July 1, 2000, API Stock No. G17J02.* For several years MMS has been permitting remote subsea wells that use flexible pipe for deep sea production pipelines. We believe that this standard adequately serves the interests of environmental protection and safety in providing guidance to both regulators and industry in the proper design and construction of flexible pipelines and flowlines. The industry projects that as many as 50 percent of future deepwater wells will be remote subsea wells tied back to existing production platforms. Also, there will be an increasing number of shallow water subsea tie-backs. Therefore, this standard will be essential for future production operations.

(7) *AWS D3.6M:1999, Specification for Underwater Welding.* MMS refers to this document every time we receive an application for an underwater welding repair. This document is analogous and complimentary to the AWS Standard D1.1 (Structural Welding Code-Steel) which is used for above-water welding. Both AWS D1.1 and AWS D1.4 (Structural Welding Code-Reinforcing Steel) have been incorporated into our regulations for over 20 years. Further, MMS was a member of the subcommittee which developed AWS D3.6M. It serves a definite purpose in our reassessment process. Underwater welding is used infrequently because of the expenses involved in making such repairs. However, it has been used with great success over the years to solve several complex underwater repair problems, some in very deep water. We receive applications for underwater welding repairs on an infrequent basis; but AWS D3.6M is the primary document the industry follows for these purposes. We need to incorporate it into our regulations, because we anticipate a growing future need for underwater welding repairs. Considered by itself, AWS D3.6M imposes no new reporting requirements or third-party review requirements.

(8) *API RP 2FPS, Recommended Practice for Planning, Designing, and Constructing Floating Production Systems, First Edition, March 2001, API Order No. G2FPS1.* RP 2FPS serves as an ''umbrella document'' for all FPSs, except for TLPs (covered by API RP 2T). It incorporates as second-tier standards the requirements of API RP 2RD, API RP 2SK, API RP 14J, API Spec 17J, and those of other standards. Considered by itself, API RP 2FPS imposes no new reporting requirements or third-party review requirements.

(9) *API RP 2SM, Recommended Practice for Design, Manufacture,*

Installation, and Maintenance of Synthetic Fiber Ropes for Offshore Mooring, First Edition, March 2001, API Order No. G02SM1. This is a new API RP that addresses an important component of offshore mooring systems. To date, synthetic fiber ropes have not been used in the mooring systems of floating OCS platforms and have seen only limited use for similar applications worldwide. Therefore, given the lack of long-term experience with the use of synthetic fiber rope, API RP 2SM will serve as the primary MMS document of reference for use in approving applications which propose the use of such mooring systems. MMS was a member of the API subcommittee which developed API RP 2SM.

Regulatory Changes in Addition to Documents Incorporated by Reference

In addition to incorporating new industry documents, the proposed rule would include language specific to FPSs. This language complements the December 16, 1998, Memorandum of Understanding (MOU) between MMS and the U.S. Coast Guard (USCG) that we published in the **Federal Register** on January 15, 1999 (64 FR 2660–2667). The MOU describes our respective and overlapping responsibilities for regulating ''Floating Outer Continental Shelf (OCS) Facilities.''

In response to issues raised by the International Association of Drilling Contractors (IADC) and Noble Drilling Services, Inc., we propose to insert new language to address our regulatory responsibilities under the MOU. We propose to insert the language into subpart H, at § 250.800(b), and subpart I at proposed § 250.904(e). The IADC and Noble Drilling Services had commented on an MMS **Federal Register** Notice of June 21, 2000 (65 FR 38453). In reviewing our third-party review requirements in that Notice, they expressed concern that we did not adequately clarify the differences between our responsibilities and those of the USCG. MMS and the USCG have overlapping responsibilities under the MOU, so it is not possible to completely eliminate ambiguities in our regulations.

We stated above that the 21st edition of API RP 2A provides the rationale for revising and shortening much of Subpart I—Platforms and Structures—in the proposed rulemaking. With the incorporation of the 21st edition, we can eliminate much of the verbiage in the current subpart I regulations. Therefore, we propose to rename and totally reorganize subpart I.

On July 7, 2000, we published a proposed rule concerning decommissioning activities (65 FR 41892). We assume that the decommissioning rule will be finalized before this rule. Therefore, we have written proposed § 250.913 to correspond to relevant sections of the decommissioning activities proposed rule. If, for any reason, the decommissioning rule does not become final before this rule, § 250.913 will be rewritten in the final rule to correspond to the status of 30 CFR part 250 at the time of publication.

Derivation Table

The following derivation table shows where the proposed requirements originate from in the current 30 CFR 250, subpart I, regulations.

Proposed new section	Current regulation section
§ 250.900 What general requirements apply to fixed and floating platforms?	§ 250.900; New requirement.
§ 250.901 What industry standards must fixed and floating platforms meet?	§ 250.900(g); § 250.907(b), (c), (d); § 250.908 (b), (c), (d), (e); New requirements.
§ 250.902 What must an application to approve a fixed, or floating platform contain?	§ 250.901(a), (b)
§ 250.903 Which of my platforms, associated structures, and major modifications are subject to the Platform Verification Program?	250.902; New requirements.
§ 250.904 If my platform, associated structure, or major modification is subject to the Platform Verification Program, what must I do?	§ 250.902; New requirements.
§ 250.905 What plans must I submit under the Platform Verification Program?	§ 250.902; New requirements.
§ 250.906 When must I resubmit Platform Verification Program plans?	§ 250.902; New requirements.
§ 250.907 When must I combine Platform Verification Program plans?	§ 250.902; New requirements.
§ 250.908 How do I nominate a CVA?	§ 250.902; § 250.903(b).
§ 250.909 What are the CVA's primary responsibilities?	§ 250.903(a).
§ 250.910 What are the CVA's primary duties during the design phase?	§ 250.903(a)(1).
§ 250.911 What are the CVA's primary duties during the fabrication phase?	§ 250.903(a)(2).
§ 250.912 What are the CVA's primary duties during the installation phase?	§ 250.903(a)(3).
§ 250.913 What are the minimum structural fatigue requirements?	§ 250.907(c).
§ 250.914 What records must I keep for all primary structural members?	§ 250.907(a).
§ 250.915 Where must I locate foundation boreholes?	New requirements.
§ 250.916 What in-service inspection requirements must I meet?	§ 250.912(b); New requirements.
§ 250.917 What are the requirements for fixed or floating platform removal and location clearance?	§ 250.913
§ 250.918 What records must I keep?	§ 250.914

Procedural Matters

Public Comment Procedures

Our practice is to make comments, including names and home addresses of respondents, available for public review during regular business hours. Individual respondents may request that we withhold their home address from the rulemaking record, which we will honor to the extent allowable by law. There may be circumstances in which we would withhold from the rulemaking record a respondent's identity, as allowable by law. If you wish us to withhold your name and/or address, you must state this prominently at the beginning of your

comment. However, we will not consider anonymous comments. We will make all submissions from organizations or businesses, and from individuals identifying themselves as representatives or officials of organizations or businesses, available for public inspection in their entirety.

Regulatory Planning and Review (Executive Order 12866)

This document is not a significant rule and is not subject to review by OMB under Executive Order 12866.

(1) The proposed rule will not have an annual effect on the economy of $100 million or more or adversely affect in a material way the economy, a sector of the economy, productivity, competition, jobs, the environment, public health or safety, or State, local, or tribal governments or communities. The overall effect of the proposed rule will not create an adverse effect upon the ability of the United States offshore oil and gas industry to compete in the world marketplace, nor will the proposal adversely affect investment or employment factors locally. (Indeed, of the 98 lessees who hold leases in deepwater and, therefore, could be affected by the proposed rule, 19 are foreign multinational corporations.) The economic analysis prepared for this proposed rule indicates that the estimated regulatory costs would be about $3 million for a ''generic'' floating platform having 10 production risers, 2 pipeline risers, a mooring system, and 80 miles of pipelines. This represents less than 1 percent of the total cost of the facility. Assuming that plans for 6 such facilities were submitted for approval in any given year, the total annual regulatory cost to the offshore oil and gas industry would be about $18 million [$3,000,000 x 6 = $18 million]. The economic analysis for this proposed rule is available from the Department of the Interior; Minerals Management Service; Operations Analysis Branch; Mail Stop 4022; 381 Elden Street; Herndon, Virginia 20170–4817; Attention: Carl W. Anderson.

(2) This rule will not create inconsistencies with other agencies' actions. This rule does not change the relationships of the OCS oil and gas leasing program with other agencies' actions. These relationships are all encompassed in agreements and memorandums of understanding that will not change with this proposed rule.

(3) This rule does not alter the budgetary effects or entitlements, grants, user fees, or loan programs or the rights or obligations of their recipients.

(4) This rule does not raise novel legal or policy issues. There are precedents for actions of this type under past lease stipulations and regulations dealing with oil spill response and oil spill financial responsibility provisions under the OCS Lands Act and the Oil Pollution Act of 1990.

Regulatory Flexibility (RF Act)

The Department certifies that this document will not have a significant economic effect on a substantial number of small entities under the RF Act (5 U.S.C. 601 *et seq.*). The economic analysis prepared for this rule concluded that not more than two small deepwater lessees would submit plans for floating platforms in any given year. Most likely, these lessees would join in as partners in a single application for a floating platform. To the extent that these lessees participate in such joint ventures, the costs imposed by the proposed rule on individual operators would be reduced significantly. Therefore, we conclude that the rule would not have a significant economic impact on a substantial number of small entities.

For the purposes of this section a ''small entity'' is considered to be an individual, limited partnership, or small company, considered to be at ''arm's length'' from the control of any parent companies, with fewer than 500 employees. Mid-size and large corporations and partnerships under their direct control have access to lines of credit and internal corporate cash flows that are not available to the ''small entity.'' Some of the operators MMS regulates under the OCS oil and gas leasing program would be considered small entities. They are generally represented by the North American Industry Classification System Code 211111, which represents crude petroleum and natural gas extractors.

Of the 98 lessees that have deepwater leases, as many as 26 may be considered to be small. These 26 lessees represent about 33 percent of all small operators on the OCS. Of the 26, only 2 hold 100-percent interest in their deepwater leases. These two lessees have annual revenues such that they would have little difficulty in meeting the requirements of the proposed rule. In all other cases, the small lessees have reduced their deepwater economic risks by being in partnership with other lessees. Sixteen of these lessees hold less than 50-percent interest in their deepwater leases.

Your comments are important. The Small Business and Agriculture Regulatory Enforcement Ombudsman and 10 Regional Fairness Boards were established to receive comments from small business about Federal agency enforcement actions. The Ombudsman will annually evaluate the enforcement activities and rate each agency's responsiveness to small business. If you wish to comment on the enforcement actions of MMS, call toll-free (888) 734–3247.

Small Business Regulatory Enforcement Fairness Act (SBREFA)

This rule is not a major rule under (5 U.S.C. 804(2)), SBREFA. This rule:

(a) Does not have an annual effect on the economy of $100 million or more.

(b) Will not cause a major increase in costs or prices for consumers, individual industries, Federal, State, or local government agencies, or geographic regions.

(c) Does not have significant adverse effects on competition, employment, investment, productivity, innovation, or ability of United States-based enterprises to compete with foreign-based enterprises. (Of the 98 lessees who hold leases in deepwater and, therefore, could be affected by the proposed rule, 19 are foreign multinational corporations.)

The economic analysis prepared for this rule concluded that not more than two small deepwater lessees would submit plans for floating platforms in any given year. Most likely, these lessees would join in as partners in a single application for a floating platform. To the extent that these lessees participate in such joint ventures, the costs imposed by the proposed rule on individual operators would be reduced significantly. Therefore, we conclude that the rule would not have a significant economic impact on a substantial number of small entities.

Paperwork Reduction Act (PRA) of 1995

The proposed revisions to sections in subparts A and B of 30 CFR 250 do not affect the information collection (IC) aspects of those regulations. These are currently approved under OMB control numbers 1010–0114 (subpart A) and 1010–0049 (subpart B). We did not submit an information collection request (ICR) to OMB for these sections.

With respect to the proposed revisions in 30 CFR part 250, subparts H, I, and J, we have submitted an ICR (form OMB 83–I) to OMB for review and approval according to section 3507(d) of the PRA. The title of the collection of information is ''Proposed Rulemaking—30 CFR part 250, Subparts J, H, and I, Fixed and Floating Platforms and Structures.'' The ICR covers only the proposed changes to subparts H and J. Because subpart I would be revised in

its entirety, the ICR does cover the burden for all of subpart I.

Potential respondents are approximately 130 Federal OCS lessees and operators and CVAs or other third-party reviewers of fixed and floating platforms. Responses are mandatory. The frequency of response varies by section, but is primarily on occasion or annual. The IC does not include questions of a sensitive nature. We will protect information considered proprietary according to 30 CFR 250.196 (Data and information to be made available to the public) and 30 CFR part 252 (OCS Oil and Gas Information Program).

MMS will use the information collected and records maintained under subpart I to determine the structural integrity of all fixed and floating platforms and to ensure that such integrity will be maintained throughout the useful life of these structures. The information is necessary to determine that platforms and structures are sound and safe for their intended purpose and the safety of personnel and pollution prevention. MMS will use the proposed information collected under subparts H and J to ensure proper construction of production safety systems and pipelines.

Although the proposed regulations would specifically cover floating platforms as well as fixed platforms, this is not a new category of IC. MMS has always permitted floating facilities on a case-by-case basis. Incorporating the new documents provides industry with specific standards by which we will hold them accountable in the design, fabrication, and installation of fixed and floating platforms offshore. Making mandatory these now voluntary standards would dictate that respondents comply with the requirements in the incorporated documents. This includes CVA review for some areas that current regulations do not require, but the voluntary standards recommend. The proposed regulations will increase the number of CVA nominations and reports associated with the facilities and require hazards analysis documentation for new floating platforms.

A separate proposed rulemaking on 30 CFR part 250, subpart Q, Decommissioning Activities (published on July 7, 2000, 65 FR 41892) would relocate the platform and structure removal and site clearance requirements from current subpart I regulations to the new subpart Q. The hour burdens for those paperwork requirements were included in the OMB approval of the IC requirements of that rulemaking (1010–0142) and are not included in this submission.

OMB has approved the IC required by current regulations in subparts H, I, and J under control numbers 1010–0059, 1010–0058 and 1010–0050. We estimate the proposed changes will increase the currently approved hour burdens by:

3,300	hours for subpart H
4,320	hours for subpart I
1,800	hours for subpart J
9,420	total burden hour increase

The proposed rule eliminates the notice requirement currently in § 250.901(e) on transporting the platform to the installation site, and the departure request in § 250.912(a) on platform inspection intervals. This reporting change results in a decrease of 570 annual burden hours.

The following chart details the IC burden for the new requirements in subparts H and J and all of the requirements in subpart I. New subpart I requirements are so noted.

Citation 30 CFR 250 proposed section	Reporting or recordkeeping requirement	Hour burden per response or record (hours)
	Subpart H	
800(b)	Submit CVA documentation under API RP 2RD. (Estimate 60 per year)	50
803(b)(2)(iii)	Submit CVA documentation under API RP 17J. (Estimate 6 per year)	50
	Subpart I	
900(a); 901(b); 902; 903; 905; 907	Submit application to install new fixed or floating platform or significant changes to approved applications, including use of alternative codes, rules, or standards; and Platform Verification Program plans for design, fabrication and installation of new, fixed, bottom-founded, pile-supported, or concrete-gravity platforms and new floating platforms.	24
900(a)(2); 903(c); 906	Submit application for major modification to any platform	24
900(a)(4)	Notify MMS within 24 hours of damage and emergency repairs and request approval of repairs.	16
900(a)(5)	Submit application for the conversion of the use of an existing mobile offshore drilling unit (MODU).	24
901(a)(6), (a)(7), (a)(8)	NEW: Submit CVA documentation under API RP 2RD, API RP 2SK, and API RP 2SM. (Estimate 6 per year).	100
901(a)(10)	NEW: Submit hazards analysis documentation under API RP 14J. (Estimate 6 per year).	500
904(c); 908	Submit nomination and qualification statement for CVA	16
910(c), (d)	Submit interim and final CVA reports and recommendations on design phase	200
911(d), (e), (f)	NEW: Submit interim and final CVA reports and recommendations on fabrication phase, including notice of fabrication procedure changes or design specification modifications. (Estimate 6 per year).	60
912(c), (d), (e)	NEW: Submit interim and final CVA reports and recommendations on installation phase, including notice of any discrepancies or damage to structural members. (Estimate 6 per year).	60
914; 918: See footnote*	Recordkeeping: Record origin and relevant material test results of all primary structural materials; retain records during all stages of construction. Compile, retain, and make available to MMS for the functional life of platform, the as-built drawings, design assumptions/analyses, summary of nondestructive examination records, and inspection results.	50

Citation 30 CFR 250 proposed section	Reporting or recordkeeping requirement	Hour burden per response or record (hours)
916	Develop in-service inspection plan and submit annual (November 1 of each year) report on inspection of fixed or floating platforms, including summary of testing results.	45
900 thru 918	General departure and alternative compliance requests not specifically covered elsewhere in subpart I regulations.	2
Subpart J		
1002(b)(4); 1007(a)(4)	Submit CVA documentation under API RP 17J. (Estimate 12 per year)	100
1002(b)(5)	Submit CVA documentation under API RP 2RD. (Estimate 12 per year)	50

*The records required are such that respondents would retain them as a usual and customary business practice. The burden would be to make them available to MMS for review.

As part of our continuing effort to reduce paperwork and respondent burdens, MMS invites the public and other Federal agencies to comment on any aspect of the reporting burden in the proposed rule. You may submit your comments directly to the Office of Information and Regulatory Affairs, OMB. Please send a copy of your comments to MMS so that we can summarize written comments and address them in the final rule preamble. Refer to the **ADDRESSES** section for mailing instructions.

The PRA provides that an agency may not conduct or sponsor a collection of information unless it displays a currently valid OMB control number. Until OMB approves the collection of information and assigns a control number, you are not required to respond. The PRA requires OMB to make its decision on the information collection aspects of this proposed rule between 30 to 60 days after publication in the **Federal Register**. Therefore, a comment to OMB is best assured of having its full effect if OMB receives it by January 28, 2002. This does not affect the deadline for the public to comment to MMS on the proposed regulations.

a. We specifically solicit comments on the following questions:

(1) Is the proposed collection of information necessary for MMS to properly perform its functions, and will it be useful?

(2) Are the estimates of the burden hours of the proposed collection reasonable?

(3) Do you have any suggestions that would enhance the quality, clarity, or usefulness of the information to be collected?

(4) Is there a way to minimize the information collection burden on those who are to respond, including the use of appropriate automated electronic, mechanical, or other forms of information technology?

b. In addition, the PRA requires agencies to estimate the total annual reporting and recordkeeping ''non-hour'' cost burden resulting from the collection of information. We have not identified any and solicit your comments on this item. For reporting and recordkeeping only, your response should split the cost estimate into two components: (1) The total capital and startup cost component, and (2) annual operation, maintenance, and purchase of services component. Your estimates should consider the costs to generate, maintain, and disclose or provide the information. You should describe the methods you use to estimate major cost factors, including system and technology acquisition, expected useful life of capital equipment, discount rate(s), and the period over which you incur costs. Generally, your estimates should not include equipment or services purchased: before October 1, 1995; to comply with requirements not associated with the information collection; for reasons other than to provide information or keep records for the Government; or as part of a usual and customary business or private practice.

Federalism (Executive Order 13132)

According to Executive Order 13132, this rule does not have Federalism implications. This rule would not substantially or directly affect the relationship between the Federal and State governments, because it deals strictly with technical standards that the offshore oil and gas industry must use in designing, fabricating, and installing floating offshore facilities. This rule would not impose costs on States or localities, nor would it require any action on the part of States or localities.

Takings Implications Assessment (Executive Order 12630)

According to Executive Order 12630, the rule does not have significant Takings implications. A Takings Implication Assessment is not required. Based on our Paperwork Burden analysis and our economic analysis for this proposed rule, the annual incremental cost of complying with this regulation for approximately 98 businesses will be about $190,000 per business, per year. This incremental cost will be absorbed by an industry sector where (1) operating costs just for a contract drilling unit to drill a single well can exceed $1,750,000 per week, and (2) the cost of a deepwater platform can exceed $1 billion. We do not believe that paying this cost will result in any takings. Thus, the Department of the Interior does not need to prepare a Takings Implication Assessment under Executive Order 12630, Governmental Actions and Interference with Constitutionally Protected Property Rights. The proposed rule would not take away or restrict a lessee's right to develop an OCS oil and gas lease according to the lease terms.

Energy Supply, Distribution, or Use (Executive Order 13211)

This rule is not a significant rule and is not subject to review by the Office of Management and Budget under Executive Order 13211. The rule does not have a significant effect on energy supply, distribution, or use, because it would streamline the regulatory review process and, thereby, enhance the development and production of energy resources from deepwater areas of the OCS. It would do this by specifying a single body of approved industry standards so that lessees would know in advance which design criteria are acceptable to MMS for deepwater production operations. The proposed rule would also simplify MMS engineers' efforts in reviewing each new project to ensure structural integrity, operational and human safety, and environmental protection. This would be beneficial for increasing energy

resources and would provide more certainty to OCS lessees who assume the high financial risks of developing deepwater areas.

Clarity of This Regulation (Executive Order 12866)

Executive Order 12866 requires each agency to write regulations that are easy to understand. We invite your comments on how to make this proposed rule easier to understand, including answers to questions such as the following:

(1) Are the requirements in the rule clearly stated?

(2) Does the rule contain technical language or jargon that interferes with its clarity?

(3) Does the format of the rule (grouping and order of sections, use of headings, paragraphing, etc.) aid or reduce its clarity?

(4) Would the rule be easier to understand if it were divided into more (but shorter) sections?

(5) Is the description of the rule in the **SUPPLEMENTARY INFORMATION** section of this preamble helpful in understanding the rule? What else can we do to make the rule easier to understand?

Send a copy of any comments that concern how we could make this rule easier to understand to: Office of Regulatory Affairs, Department of the Interior, Room 7229, 1849 C Street, NW., Washington, DC 20240. You may also e-mail the comments to this address: *Exsec@ios.doi.gov.*

Civil Justice Reform (Executive Order 12988)

According to Executive Order 12988, the Office of the Solicitor has determined that this rule does not unduly burden the judicial system and meets the requirements of sections 3(a) and 3(b)(2) of the Order.

National Environmental Policy Act (NEPA)

This rule does not constitute a major Federal action significantly affecting the quality of the human environment. We have analyzed this rule under the criteria of the NEPA and 516 Departmental Manual 6, Appendix 10.4C(1). We completed a Categorical Exclusion Review for this action on November 20, 2000, and concluded that ''the proposed rulemaking does not represent an exception to the established criteria for categorical exclusion; therefore, preparation of an environmental analysis or environmental impact statement will not be required.''

Unfunded Mandate Reform Act (UMRA) of 1995

This rule does not impose an unfunded mandate on State, local, or tribal governments or the private sector of more than $100 million per year. The rule does not have a significant or unique effect on State, local or tribal governments or the private sector. A statement containing the information required by the UMRA (2 U.S.C. 1531 *et seq.*) is not required.

List of Subjects in 30 CFR Part 250

Continental shelf, Environmental impact statements, Environmental protection, Government contracts, Incorporation by reference, Investigations, Mineral royalties, Oil and gas development and production, Oil and gas exploration, Oil and gas reserves, Penalties, Pipelines, Public lands—mineral resources, Public lands—rights-of-way, Reporting and recordkeeping requirements, Sulphur development and production, Sulphur exploration, Surety bonds.

Dated: December 3, 2001.

J. Steven Griles,

Acting Assistant Secretary, Land and Minerals Management.

For the reasons stated in the preamble, the Minerals Management Service (MMS) proposes to amend 30 CFR part 250 as follows:

PART 250—OIL AND GAS AND SULPHUR OPERATIONS IN THE OUTER CONTINENTAL SHELF

1. The authority citation for part 250 continues to read as follows:

Authority: 43 U.S.C. 1331, *et seq.*

2. In § 250.105, the definition for ''facility,'' is revised to read as follows:

§ 250.105 Definitions.

* * * * *

Facility means: (1) As used in § 250.130, all installations permanently or temporarily attached to the seabed on the OCS (including manmade islands and bottom-sitting structures). They include mobile offshore drilling units (MODUs) or other vessels engaged in drilling or downhole operations, used for oil, gas or sulphur drilling, production, or related activities. They include all floating production systems (FPSs), variously described as column-stabilized-units (CSUs); floating production, storage and offloading facilities (FPSOs); tension-leg platforms (TLPs); spars, etc. They also include facilities for product measurement and royalty determination (e.g. lease Automatic Custody Transfer Units, gas meters) of OCS production on installations not on the OCS. Any group of OCS installations interconnected with walkways, or any group of installations that includes a central or primary installation with processing equipment and one or more satellite or secondary installations is a single facility. The Regional Supervisor may decide that the complexity of the individual installations justifies their classification as separate facilities.

(2) As used in § 250.303, means all installations or devices permanently or temporarily attached to the seabed. They include mobile offshore drilling units (MODUs), even while operating in the ''tender assist'' mode (i.e. with skid-off drilling units) or other vessels engaged in drilling or downhole operations. They are used for exploration, development, and production activities for oil, gas, or sulphur and emit or have the potential to emit any air pollutant from one or more sources. They include all floating production systems (FPSs), including column stabilized units (CSUs); floating production, storage and offloading facilities (FPSOs); tension-leg platforms (TLPs); spars, etc. During production, multiple installations or devices are a single facility if the installations or devices are at a single site. Any vessel used to transfer production from an offshore facility is part of the facility while it is physically attached to the facility.

(3) As used in § 250.417(b), means a vessel, a structure, or an artificial island used for drilling, well completion, well-workover, or production operations.

(4) As used in §§ 250.900 through 250.918, means all installations or devices permanently or temporarily attached to the seabed. They are used for exploration, development, and production activities for oil, gas, or sulphur and emit or have the potential to emit any air pollutant from one or more sources. They include all floating production systems (FPSs), including column stabilized units (CSUs); floating production, storage and offloading facilities (FPSOs); tension-leg platforms (TLPs); spars, etc. During production, multiple installations or devices are a single facility if the installations or devices are at a single site. Any vessel used to transfer production from an offshore facility is part of the facility while it is physically attached to the facility.

* * * * *

3. In § 250.198, in the table in paragraph (e), the following changes are made:

A. Remove entries for API RP 2A, 19th Edition; API RP 2A–WSD, 20th

Edition; and API RP 2A–WSD, 20th Edition, Supplement 1.

B. Add entries in alphanumerical order for API RP 2A–WSD, API RP 2FPS; API RP 2RD, API RP 2SK, API RP 2SM; API RP 2T, API RP 14J, API Spec 17J, and AWS D3.6M:1999 as set forth below:

C. Revise entries for ACI Standard 318–95, ACI 357R–84, AISC Standard Specification for Structural Steel Buildings, ASTM Standard C 33–99a, ASTM Standard C 94/C 94M–99, ASTM Standard C 150–99, ASTM Standard C 330–99, ASTM Standard C 595–98, AWS D1.1–96, AWS D1.4–79, NACE Standard MR0175–99 and NACE Standard RP 01–76–94.

§ 250.198 Documents incorporated by reference.

* * * * *

(e) * * *

Title of documents	Incorporated by reference at
* * * *	* * *
ACI Standard 318–95, Building Code Requirements for Reinforced Concrete, plus Commentary on Building Code Requirements for Reinforced Concrete (ACI 318R–95).	§ 250.901(a)(1).
ACI 357R–84, Guide for the Design and Construction of Fixed Offshore Concrete Structures, 1984.	§ 250.901(a)(2).
AISC Standard Specification for Structural Steel Buildings, Allowable Stress Design and Plastic Design, June 1, 1989, with Commentary.	§ 250.901(a)(3).
* * * *	* * *
API RP 2A—WSD, Recommended Practice for Planning, Designing and Constructing Fixed Offshore Platforms—Working Stress Design; Twenty-first Edition, December 2000, API Order No. G2AWSD.	§ 250.901(a)(4).
* * * *	* * *
API RP 2FPS, Recommended Practice for Planning, Designing, and Constructing Floating Production Systems, First Edition, March 2001, API Order No. G2FPS1.	§ 250.901(a)(5).
API RP 2RD, Design of Risers for Floating Production Systems (FPSs) and Tension-Leg Platforms (TLPs), First Edition, June 1998, API Stock No.G02RD1.	§ 250.800(b); § 250.901(a)(6); § 250.1002(b)(5).
API RP 2SK, Recommended Practice for Design and Analysis of Stationkeeping Systems for Floating Structures, Second Edition, December 1996, Effective Date: March 1, 1997, API Stock No. G02SK2.	§ 250.800(b); § 250.901(a)(7).
API RP 2SM, Recommended Practice for Design, Manufacture, Installation, and Maintenance of Synthetic Fiber Ropes for Offshore Mooring, First Edition, March 2001, API Order No. G02SM1.	§ 250.901(a)(8).
API RP 2T, Planning, Designing and Constructing Tension Leg Platforms, Second Edition, August 1997, Order No. G02T02.	§ 250.901(a)(9).
* * * *	* * *
API RP 14J, Recommended Practice for Design and Hazards Analysis for Offshore Production Facilities, First Edition, Sept. 1, 1993, API Stock No. 811–07200.	§ 250.800(b); § 250.803(a); § 250.901(a)(10).
* * * *	* * *
API Spec 17J, Specification for Unbonded Flexible Pipe, Second Edition, November 1999, Effective Date: July 1, 2000, API Stock No. G17J02.	§ 250.803(b)(2)(iii); § 250.1002(b)(4); § 250.1007(a)(4).
* * * *	* * *
ASTM Standard C 33–99a, Standard Specification for Concrete Aggregates	§ 250.901(a)(11).
ASTM Standard C 94/C 94M–99, Standard Specification for Ready-Mixed Concrete.	§ 250.901(a)(12).
ASTM Standard C 150–99, Standard Specification for Portland Cement	§ 250.901(a)(13).
ASTM Standard C 330–99, Standard Specification for Lightweight Aggregates for Structural Concrete.	§ 250.901(a)(14).
ASTM Standard C 595–98, Standard Specification for Blended Hydraulic Cements.	§ 250.901(a)(15).
AWS D1.1–96, Structural Welding Code—Steel, 1996, including Commentary	§ 250.901(a)(16).
AWS D1.4–79, Structural Welding Code—Reinforcing Steel, 1979	§ 250.901(a)(17).
AWS D3.6M:1999, Specification for Underwater Welding	§ 250.901(a)(18).
NACE Standard MR0175–99, Sulfide Stress Cracking Resistant Metallic Materials for Oilfield Equipment, Revised January 1999, NACE Item No. 21302.	§ 250.417(p)(2); § 250.901(a)(19).
NACE Standard RP 01–76–94, Standard Recommended Practice, Corrosion Control of Steel Fixed Offshore Platforms Associated with Petroleum Production.	§ 250.901(a)(20).

4. In § 250.204, paragraph (a)(2) is revised to read as follows:

§ 250.204 Development and Production Plan.

(a) * * *

(2) A description of any drilling vessels, fixed or floating platforms, pipelines, or other facilities and operations located offshore which are proposed or known by the lessee (whether or not owned or operated by

the lessee) to be directly related to the proposed development. The description must include the location, size, design, and important safety, pollution prevention, and environmental monitoring features of the facilities and operations. Floating production systems (FPSs) include column-stabilized units (CSUs); floating production, storage, and offloading facilities (FPSOs); tension-leg platforms (TLPs); spars, etc.

* * * * *

5. In § 250.800, the introductory paragraph is redesignated as paragraph (a), and a new paragraph (b) is added to read as follows:

§ 250.800 General requirements.

* * * * *

(b) For all new floating production systems (FPSs) (e.g., column-stabilized units (CSUs); floating production, storage and offloading facilities (FPSOs); tension-leg platforms (TLPs); spars, etc.), you, the lessee, must do all of the following:

(1) Comply with API RP 14J;

(2) Meet the drilling and production riser standards of API RP 2RD;

(3) Meet the production-safety systems requirements contained in this subpart;

(4) Design all stationkeeping systems for floating facilities to meet the standards of API RP 2SK, as well as relevant U.S. Coast Guard regulations; and

(5) Design stationkeeping systems for floating facilities to meet structural requirements in subpart I, §§ 250.900 through 250.918 of this part.

6. In § 250.803, paragraph (a) is revised and paragraph (b)(2)(iii) is added to read as follows:

§ 250.803 Additional production system requirements.

(a) For all new floating production platforms, you must comply with API RP 14J. For all production platforms, you must comply with the following production safety system requirements, in addition to the requirements of § 250.802 and the requirements of API RP 14C.

(b) * * *

(2) * * *

(iii) If you are installing flowlines constructed of unbonded flexible pipe on a floating platform, you must comply with the requirements of API Spec 17J, including its third-party review standards for independent verification agents (IVAs). You must submit your IVA reviews for flowlines constructed of unbonded flexible pipe for review by the MMS District Supervisor.

* * * * *

7. Subpart I and its title are revised to read as follows:

Subpart I—Fixed and Floating Platforms and Structures

Sec.

250.900 What general requirements apply to fixed and floating platforms?
250.901 What industry standards must fixed and floating platforms meet?
250.902 What must an application to approve a fixed or floating platform contain?
250.903 Which of my platforms, associated structures, and major modifications are subject to the Platform Verification Program?
250.904 If my platform, associated structure, or major modification is subject to the Platform Verification Program, what must I do?
250.905 What plans must I submit under the Platform Verification Program?
250.906 When must I resubmit Platform Verification Program plans?
250.907 When must I combine Platform Verification Program plans?
250.908 How do I nominate a CVA?
250.909 What are the CVA's primary responsibilities?
250.910 What are the CVA's primary duties during the design phase?
250.911 What are the CVA's primary duties during the fabrication phase?
250.912 What are the CVA's primary duties during the installation phase?
250.913 What are the minimum structural fatigue requirements?
250.914 What records must I keep for all primary structural members?
250.915 Where must I locate foundation boreholes?
250.916 What in-service inspection requirements must I meet?
250.917 What are the requirements for fixed or floating platform removal and location clearance?
250.918 What records must I keep?

Subpart I—Fixed and Floating Platforms and Structures

§ 250.900 What general requirements apply to fixed and floating platforms?

(a) You must design, fabricate, install, inspect, and maintain all fixed and floating platforms, and related structures on the Outer Continental Shelf (OCS) so as to ensure their structural integrity for the safe conduct of drilling, workover, and production operations. In doing this, you must consider the specific environmental conditions at the platform location. You must submit an application under § 250.902 and obtain the approval of the Regional Supervisor before installing any platform or performing any of the other activities described in the following table:

Activity	Conditions to be met for application
(1) Install a platform	You must adhere to the requirements of this subpart, including the industry standards in § 250.901
(2) Make a major modification to any platform	Major modifications are any structural changes that materially alter the approved plan or cause a major deviation from approved operations. They are subject to the requirements of this subpart, including the industry standards in § 250.901
(3) Make a major repair to damage to any platform.	Major repairs of damage are corrective operations involving structural members affecting the structural integrity of a portion or all of the platform. They are subject to the requirements of this subpart, including the industry standards in § 250.901
(4) Make an emergency repair to a primary structural element to restore an existing permitted condition.	Under emergency conditions, you may make repairs to primary structural elements to restore an existing permitted condition without an application or prior approval. You must notify the Regional Supervisor of the damage that occurred within 24 hours, and you must notify the Regional Supervisor of the repairs that were made within 24 hours of completing the repairs
(5) Conversion of the use of an existing mobile offshore drilling unit (MODU).	The Regional Supervisor will determine on a case-by-case basis the requirements for an application for conversion of an existing MODU. Your application must include: (i) The converted MODU's intended location and use; (ii) A demonstration of the adequacy of the design and structural condition of the converted MODU; and (iii) A demonstration that the level of safety for the converted MODU is at least equal to that of reused platforms.

(b) You must design, fabricate, install, inspect, and maintain all new fixed or bottom-founded platforms (e.g., template type, tower type, caisson, gravity-base type, artificial island, etc.) according to all the requirements of this section, § 250.901 (including applicable referenced documents), § 250.902, and §§ 250.913 through 250.918.

(c) Section 250.903 fully describes the facilities that are subject to the Platform Verification Program. In brief, all floating platforms are subject to the Platform Verification Program. Also, all fixed or bottom-founded platforms that meet certain conditions listed in § 250.903(a) are subject to the Platform Verification Program.

§ 250.901 What industry standards must fixed and floating platforms meet?

(a) In addition to the other requirements of this subpart, your plans for fixed or floating platform design, analysis, fabrication, and installation must, as appropriate, conform to:

(1) American Concrete Institute (ACI) Standard 318, Building Code Requirements for Reinforced Concrete, plus Commentary.

(2) ACI 357R, Guide for the Design and Construction of Fixed Offshore Concrete Structures;

(3) American Institute of Steel Construction (AISC) Standard Specification for Structural Steel Buildings, Allowable Stress Design and Plastic Design;

(4) American Petroleum Institute (API) Recommended Practice (RP) 2A, Recommended Practice for Planning, Designing, and Constructing Fixed Offshore Platforms;

(5) API RP 2FPS, Recommended Practice for Planning, Designing, and Constructing Floating Production Systems;

(6) API RP 2RD, Design of Risers for Floating Production Systems (FPSs) and Tension-Leg Platforms (TLPs);

(7) API RP 2SK, Recommended Practice for Design and Analysis of Station Keeping Systems for Floating Structures;

(8) API RP 2SM, Recommended Practice for Design, Manufacture, Installation, and Maintenance of Synthetic Fiber Ropes for Offshore Mooring;

(9) API RP 2T, Recommended Practice for Planning, Designing and Constructing Tension Leg Platforms;

(10) API RP 14J, Recommended Practice for Design and Hazards Analysis for Offshore Production Facilities;

(11) American Society for Testing and Materials (ASTM) Standard C 33–99a, Standard Specification for Concrete Aggregates;

(12) ASTM Standard C 94/C 94M–99, Standard Specification for Ready-Mixed Concrete;

(13) ASTM Standard C 150–99, Standard Specification for Portland Cement;

(14) ASTM Standard C 330–99, Standard Specification for Lightweight Aggregates for Structural Concrete;

(15) ASTM Standard C 595–98, Standard Specification for Blended Hydraulic Cements;

(16) AWS D1.1, Structural Welding Code—Steel;

(17) AWS D1.4, Structural Welding Code—Reinforcing Steel;

(18) AWS D3.6M, Specification for Underwater Welding;

(19) NACE Standard MR0175, Sulfide Stress Cracking Resistant Metallic Materials for Oilfield Equipment; and

(20) NACE Standard RP 01–76–94, Standard Recommended Practice, Corrosion Control of Steel Fixed Offshore Platforms Associated with Petroleum Production.

(b) You must follow the requirements contained in the documents listed under paragraph (a) of this section insofar as they do not conflict with other provisions of 30 CFR part 250. You may use applicable provisions of these documents, as approved by the Regional Supervisor, for the design, fabrication, and installation of platforms such as spars, since standards specifically written for such structures do not exist. You may also use alternative codes, rules, or standards, as approved by the Regional Supervisor, under the conditions enumerated in § 250.141, paragraphs (a), (b), and (c) of this part.

(c) For information on all standards mentioned in this section, see § 250.198 of this part.

§ 250.902 What must an application to approve a fixed or floating platform contain?

You must submit to the Regional Supervisor for approval all applications under this subpart and all significant changes or modifications to approved applications. Your application for all new fixed or floating platforms or major modifications must contain all of the following general facility information:

Required documents	Required contents	Other requirements
(a) Application cover letter	Proposed facility designation, lease number, area, name, and block number, and the type of facility (e.g., drilling, production, quarters)..	You must submit three copies.*
(b) Location plat	Latitude and longitude coordinates, Universal Mercator grid-system coordinates, state plane coordinates in the Lambert or Transverse Mercator Projection System, and distances in feet from nearest block lines.	Your plat must be drawn to a scale of 1 inch equals 2,000 feet and include the coordinates of the the lease block boundary lines. You must submit three copies.*
(c) Front, Side, and Plan View drawings.	Platform dimensions and orientation, elevations relative to M.S.L., and pile sizes and penetrations.	Your drawing sizes must not exceed 11″ x 17″. You must submit three copies.*
(d) Complete set structural drawings		Your drawing sizes must not exceed 11″ x 17″. You must submit one copy.
(e) Summary of environmental data	A Summary of the environmental data described in the standards referenced under § 250.901(a) and in § 250.198 of this part, where the data is used in the design or analysis of the platform. Examples of relevant data include information on waves, wind, current, tides, temperature, snow and ice effects, marine growth, and water depth.	You must submit one copy.
(f) Summary of the enigneering design data.	Loading information (e.g., live, dead, environmental), structural information (e.g., design-life, material types, cathodic protection systems, design criteria fatigue life, fabrication and installation guidelines), and foundation information (e.g., soil stability, design criteria).	You must submit one copy.

Required documents	Required contents	Other requirements
(g) Project-specific	All studies pertinent to platform design or installation, e.g., soil and/or oceanographic reports.	You must submit one copy each study.
(h) Description of the loads imposed on the facility.	Loads imposed by production and pipeline risers and mooring and anchoring systems.	You must submit one copy.
(i) A copy of the inservice inspection plan.	This plan is described in §250.916	You must submit one copy.
(j) Certification	The following statement: ''The design of this structure has been certified by a recognized classification society, or a registered civil or structural engineer, or equivalent, specializing in the design of offshore structures. The certified design and as-built plans and specifications will be on file at (give location)''.	An authorized company must sign the registered statement. You must submit one copy.

*For your facilities subject to Platform Verification Program requirements in §§ 250.903 through 250.912, you must submit one additional copy of these items (four copies total).

§ 250.903 Which of my platforms, associated structures, and major modifications are subject to the Platform Verification Program?

(a) All new fixed or bottom-founded platforms that meet any of the following five conditions are subject to the Platform Verification Program:

(1) Platforms installed in water depths exceeding 400 feet (122 meters);

(2) Platforms having natural periods in excess of 3 seconds;

(3) Platforms installed in areas of unstable bottom conditions;

(4) Platforms having configurations and designs which have not previously been used or proven for use in the area; or

(5) Platforms installed in seismically active areas.

(b) All new floating platforms are subject to the Platform Verification Program. Floating platforms include floating production systems (FPSs) such as column-stabilized units (CSUs); floating production, storage and offloading systems (FPSOs); tension-leg platforms (TLPs); spars, etc. The following structures that may be associated with a floating platform are also subject to the Platform Verification Program:

(1) Drilling and production risers, and riser tensioning systems;

(2) Turrets and turret-and-hull interfaces;

(3) Foundations and anchoring systems; and

(4) Mooring or tethering systems.

(c) Platform Verification Program requirements apply to any major modification to a fixed or floating platform covered under this section.

(d) The applicability of Platform Verification Program requirements to other types of facilities will be determined by MMS on a case-by-case basis.

§ 250.904 If my platform, associated structure, or major modification is subject to the Platform Verification Program, what must I do?

If your platform, associated structure, or major modification meets the criteria in § 250.903, you must:

(a) Design, fabricate, and install your facility, associated structures, or major modification to your facility according to the requirements of §§ 250.900 through 250.918, and the applicable documents listed in § 250.901(a);

(b) Submit for the Regional Supervisor's approval three copies each of the design verification, fabrication verification, and installation verification plans required by § 250.905; and

(c) Include as a part of each verification plan required by § 250.905 your nomination of a Certified Verification Agent (CVA);

(d) Follow the additional requirements in §§ 250.906 through 250.912; and

(e) Prepare and submit for MMS review, plans for ship-shaped FPSs which are modified to address in detail only those items listed in § 250.903(b). For detailed requirements pertaining to the ship-shaped hull and superstructure, you must refer to, and comply with applicable U.S. Coast Guard regulations.

§ 250.905 What plans must I submit under the Platform Verification Program?

If your platform, associated structure, or major modification meets the criteria in § 250.903, you must submit all of the following plans required by this section:

(a) *Design verification plan.* You may submit your design verification plan with or subsequent to the submittal of your Exploration Plan (EP) or Development and Production Plan (DPP). You may not submit your design verification plan before you submit your EP or DPP. Your design verification must be conducted by, or be under the direct supervision of, a registered professional civil or structural engineer or equivalent, with previous experience in directing the design of similar facilities, systems, structures, or equipment. Your design verification plan must include the following:

(1) All design documentation specified in § 250.902;

(2) Abstracts of the computer programs used in the design process; and

(3) A summary of the major design considerations and the approach to be used to verify the validity of these design considerations.

(b) *Fabrication verification plan.* You must submit your fabrication verification plan to the Regional Supervisor, and the Regional Supervisor must approve your fabrication verification plan before you may initiate any related operations. Your fabrication verification plan must include the following:

(1) Fabrication drawings and material specifications for artificial island structures and major members of concrete- and steel-gravity structures;

(2) For jacket and floating structures, all the primary load-bearing members included in the space-frame analysis; and

(3) A summary description of the following:

(i) Structural tolerances;

(ii) Welding procedures;

(iii) Material (concrete, gravel, or silt) placement methods;

(iv) Fabrication standards;

(v) Material quality-control procedures;

(vi) Methods and extent of nondestructive examinations for welds and materials; and

(vii) Quality assurance procedures.

(c) *Installation verification plan.* You must submit your installation verification plan to the Regional Supervisor, and the Regional Supervisor must approve your installation verification plan before you may initiate any related operations. Your installation verification plan must include:

(1) A summary description of the planned marine operations;

(2) Contingencies considered;
(3) Alternative courses of action; and
(4) The inspections to be performed, including an identification of areas to be inspected and the acceptance and rejection criteria to be used.

§ 250.906 When must I resubmit Platform Verification Program plans?

(a) You must resubmit any design verification, fabrication verification, or installation verification plan to the Regional Supervisor for approval if:
(1) The CVA changes;
(2) The CVA's or assigned personnel's qualifications change; or
(3) The level of work to be performed changes.
(b) If only part of a verification plan is affected by one of the changes described in paragraph (a) of this section, you can resubmit only the affected part. You do not have to resubmit the summary of technical details unless you make changes in the technical details.

§ 250.907 When must I combine Platform Verification Program plans?

You must combine fabrication verification and installation verification plans for manmade islands or platforms fabricated and installed in place.

§ 250.908 How do I nominate a CVA?

(a) As part of your design verification, fabrication verification, or installation verification plan, you must nominate a CVA for the Regional Supervisor's approval. You must specify whether the nomination is for the design, fabrication, or installation phase of verification; for two phases; or for all three phases.
(b) For each CVA, you must submit a qualification statement that includes the following:
(1) Previous experience in third-party verification or experience in the design, fabrication, or installation of fixed offshore oil and gas platforms, similar facilities and other structures, floating platforms, manmade islands, other marine structures, and related systems and equipment;
(2) Technical capabilities of the individual or the primary staff to be associated with the CVA functions for the specific project;
(3) Size and type of organization or corporation;
(4) In-house availability of, or access to, appropriate technology, i.e., computer programs and hardware and testing materials and equipment;
(5) Ability to perform the CVA functions for the specific project considering current commitments;
(6) Previous experience with MMS requirements and procedures;
(7) The level of work to be performed by the CVA; and
(8) A list of documents to be furnished to the CVA.

§ 250.909 What are the CVA's primary responsibilities?

(a) The CVA nominated by you and approved by the Regional Supervisor must conduct specified reviews according to §§ 250.910, 250.911, and 250.912.
(b) The CVA must handle all data you provide in the strictest confidence. Other than to MMS, the CVA must not release any data without your consent.
(c) Individuals or organizations acting as CVAs for a particular platform or floating facility must not function in any capacity other than that of a CVA for that specific project whenever the additional activities would create a conflict of interest, or the appearance of a conflict of interest.

§ 250.910 What are the CVA's primary duties during the design phase?

(a) The CVA must conduct the design verification to ensure that the proposed fixed or floating platform or major modification is designed to withstand the maximum environmental and functional load conditions anticipated during the intended service life at the proposed location.
(b) The CVA must consider the applicable provisions of the documents listed in § 250.901(a) and of §§ 250.913 through 250.915 and use good engineering practice in conducting an independent assessment of the adequacy of all proposed:
(1) Planning criteria;
(2) Operational requirements;
(3) Environmental data;
(4) Load determinations;
(5) Stress analyses;
(6) Material designations;
(7) Soil and foundation conditions;
(8) Safety factors; and
(9) Other pertinent parameters of the proposed design.
(c) The CVA must submit interim reports to the Regional Supervisor and to you, as appropriate.
(d) The CVA, upon completion of the design verification, must prepare a final report which summarizes the material reviewed and the CVA's findings. The CVA must submit one copy of the report to the Regional Supervisor. The CVA must make this submittal within 6 weeks of the receipt of the design data or from the date the approval to act as a CVA was issued, whichever is later. The final report must include:
(1) The CVA's recommendation that the Regional Supervisor either accept, request modifications, or reject the proposed design;
(2) The particulars of how, by whom, and when the independent review was conducted; and
(3) Any special comments the CVA may deem necessary.

§ 250.911 What are the CVA's primary duties during the fabrication phase?

(a) The CVA must monitor the fabrication of the fixed or floating platform or major modification to ensure that it has been built according to the approved design plans and specifications and the fabrication plan.
(b) The CVA must make periodic onsite inspections while fabrication is in progress. The CVA must verify the following fabrication items, as appropriate:
(1) Quality control by lessee and builder;
(2) Fabrication site facilities;
(3) Material quality and identification methods;
(4) Fabrication procedures specified in the approved plan and adherence to such procedures;
(5) Welder and welding procedure qualification and identification;
(6) Structural tolerences specified and adherence to those tolerances;
(7) The nondestructive examination requirements and evaluation results of the specified examinations;
(8) Destructive testing requirements and results;
(9) Repair procedures;
(10) Installation of corrosion-protection systems and splash-zone protection;
(11) Erection procedures to ensure that overstressing of structural members does not occur;
(12) Alignment procedures;
(13) Dimensional check of the overall structure, including any turrets, turret and hull interfaces, any mooring line and chain and riser tensioner line segments; and
(14) Status of quality-control records at various stages of fabrication.
(c) The CVA must consider the applicable provisions of the documents listed in § 250.901(a) and of §§ 250.913 through 250.915 and use good engineering practice in conducting the independent assessment of the adequacy of the fabrication of the fixed or floating platform or major modification.
(d) The CVA must submit interim reports to the Regional Supervisor and to you, as appropriate.
(e) If the CVA finds that fabrication procedures are changed or design specifications are modified, the CVA must inform you. If you accept the modifications, then the CVA must so inform the Regional Supervisor.

(f) The CVA must prepare a final report covering the adequacy of the entire fabrication phase. The CVA is not required in the final report to cover aspects of the fabrication already included in interim reports. The CVA must submit one copy of the report to the Regional Supervisor immediately after completion of the fabrication of the fixed or floating platform. In the report the CVA must:

(1) Give details of how, by whom, and when the independent monitoring activities were conducted;

(2) Provide any special comments that the CVA deems necessary;

(3) Describe the CVA's activities during the verification process;

(4) Summarize the CVA's findings

(5) Confirm or deny compliance with the design specifications and the approved fabrication plan; and

(6) Make a recommendation to accept or reject the fabrication.

§ 250.912 What are the CVA's primary duties during the installation phase?

(a) The CVA must perform the following:

(1) Witness the loadout of the jacket, decks, piles, or structures from each fabrication site;

(2) Review the towing records;

(3) Witness the loadout of a floating platform;

(4) Conduct an onsite survey after transportation to the approved location;

(5) Witness the actual installation of the fixed or floating platform or major modification;

(6) For floating platforms, witness the installation of the mooring, tethering, and anchoring systems; and

(7) Determine that the platform has been installed at the approved location according to the approved design and the installation plan.

(b) The CVA must consider the applicable provisions of the documents listed in § 250.901(a) and of §§ 250.913 through 250.915 and use good engineering practice in conducting an independent assessment of the adequacy of the installation activities. The CVA must verify the following parts of the overall installation process, as appropriate:

(1) Loadout and initial flotation operations, if any;

(2) Towing operations to the specified location;

(3) Launching and uprighting operations;

(4) Submergence operations;

(5) Pile or anchor installation;

(6) Installation of mooring and tethering systems; and

(7) Final deck and component installations on fixed and floating offshore facilities.

(c) The CVA must observe the installation activities, spot-check equipment, procedures, and recordkeeping, as necessary, to determine compliance with the applicable documents listed in § 250.901(a) and of §§ 250.913 through 250.915 and the approved plans, and immediately report to you and the Regional Supervisor any discrepancies or damage to structural members. You must obtain approval for modified installation procedures or for major deviations from approved installation procedures from the Regional Supervisor.

(d) The CVA must submit interim reports to you and the Regional Supervisor, as appropriate.

(e) The CVA must prepare a final report covering the adequacy of the entire installation phase and submit one copy of the final report to the Regional Supervisor within 2 weeks of completion of the installation of the platform. In the report, the CVA must:

(1) Give details of how, by whom, and when the independent monitoring activities were conducted;

(2) Provide any special comments that the CVA deems necessary;

(3) Describe the CVA's activities during the verification process;

(4) Summarize the CVA's findings;

(5) Write a confirmation or denial of compliance with the approved installation plan; and

(6) Provide recommendation to accept or reject the installation.

§ 250.913 What are the minimum structural fatigue requirements?

There are numerous circumstances in which it may be necessary to conduct a detailed analysis of cumulative fatigue damage on structural members and joints. The following table provides minimal requirements for structural members and joints which require a detailed analysis of cumulative fatigue damage.

If * * *	Then * * *
(a) There is sufficient structural redundancy to prevent catastrophic failure of the member or join under consideration.	The results of the analysis must indicate a minimum calculated life of twice the design life of the platform.
(b) There is not sufficient structural reduncancy to prevent catastrophic failure of the member or joint.	The results of a fatigue analysis must indicate a minimum calculated life of three times the design life of the platform.
(c) The desirable degree of redundancy is significantly reduced as a result of fatigue damage.	The results of a fatigue analysis must indicate a minimum calculated life of three times the design life of the platform.

§ 250.914 What records must I keep for all primary structural members?

You must record and retain the origin and relevant material test results of all primary structural materials during all stages of construction. Primary material is material that, should it fail, it would lead to a significant reduction in platform safety, structural reliability, or operating capabilities. Items such as steel brackets, deck stiffeners and secondary braces or beams would not generally be considered primary structural members (or materials).

§ 250.915 Where must I locate foundation boreholes?

(a) For fixed or bottom-founded platforms and tension leg platforms, your maximum distance from any foundation pile to a soil boring must not exceed 500 feet.

(b) For deepwater floating platforms which utilize catenary or taut-leg moorings, you must take borings at the most heavily loaded anchor location, at the anchor points approximately 120 and 240 degrees around the anchor pattern from that boring, and, as necessary, other points throughout the anchor pattern to establish the soil profile suitable for foundation design purposes.

§ 250.916 What in-service inspection requirements must I meet?

(a) You must develop an in-service inspection plan. As a minimum, your plan must fulfill the recommendations of the appropriate API documents listed in § 250.901(a). Your plan must specify the type, extent, and frequency of in-place inspections which your contractor will conduct for both the above water and the under water structure of all platforms, and pertinent components of the mooring systems for floating platforms.

(b) You must submit a report annually on November 1 to the Regional Supervisor that must include :

(1) A list of fixed or floating platforms inspected in the preceding 12 months;

(2) The extent and area of inspection;

(3) The type of inspection employed, i.e., visual, magnetic particle, ultrasonic testing; and

(4) A summary of the testing results indicating what repairs, if any, were needed and the overall structural condition of the fixed or floating platform.

§ 250.917 What are the requirements for fixed or floating platform removal and location clearance?

You must remove all structures according to §§ 250.1725 through 250.1730 of Subpart Q—Decommissioning Activities—of this part.

§ 250.918 What records must I keep?

You must compile, retain, and make available to MMS representatives for the functional life of all fixed or floating platforms:

(a) The as-built drawings;

(b) The design assumptions and analyses;

(c) A summary of the fabrication and installation nondestructive examination records; and

(d) The inspection results from the inspections required by § 250.916.

8. In § 250.1002 paragraphs (b)(4) and (b)(5) are added to read as follows:

§ 250.1002 Design requirements for DOI pipelines.

* * * * *

(b) * * *

(4) If you are installing pipelines constructed of unbonded flexible pipe, they must be built according to the standards and the third-party review standards for an independent verification agent (IVA) in API Spec 17J.

(5) You must construct pipeline risers for tension leg platforms and other floating platforms according to the design standards of API RP 2RD.

* * * * *

9. In § 250.1007, a new sentence is added at the end of paragraph (a)(4) to read as follows:

§ 250.1007 What to include in applications.

(a) * * *

(4) * * * If your application involves using unbonded flexible pipe, you must include a review by a third-party IVA according to API Spec 17J.

* * * * *

[FR Doc. 01–31723 Filed 12–26–01; 8:45 am]

BILLING CODE 4310–MR–P

DEPARTMENT OF TRANSPORTATION

Coast Guard

33 CFR Part 117

[CGD09–01–148]

RIN–2115–AE47

Drawbridge Operation Regulations; Chicago River, IL

AGENCY: Coast Guard, DOT.

ACTION: Notice of proposed rulemaking.

SUMMARY: The Coast Guard proposes to revise the operating regulation governing drawbridges over Chicago River waterways. The proposed rule would add Division Street bridge, mile 3.30, over the North Branch of Chicago River, to the current list of bridges not required to open for navigation; remove the requirement for Kinzie Street bridge, mile 1.81 over North Branch of Chicago River, and Cermak Road bridge, mile 4.05 over South Branch of Chicago River, to open on signal for commercial vessels due to the recently accomplished increases in vertical clearances; require a 12-hour advance notice requirement from commercial vessels year-round for City of Chicago moveable bridges; update ownership of certain railroad bridges; specify rush hour times (7 a.m. to 10 a.m. and 4 p.m. to 6:30 p.m.—Monday through Friday, with the exception of Federal holidays) that City of Chicago bridges would not be required to open for any vessels; and generally make the regulation easier to read and understand.

DATES: Comments must be received on or before February 25, 2002.

ADDRESSES: Comments may be mailed or delivered to: Commander (obr), Ninth Coast Guard District, 1240 East Ninth Street, Room 2019, Cleveland, OH, 44199–2060 between 8 a.m. and 3 p.m., Monday through Friday, except Federal holidays. The telephone number is (216) 902–6084.

FOR FURTHER INFORMATION CONTACT: Mr. Scot M. Striffler, Project Manager, Ninth Coast Guard District Bridge Branch, at (216) 902–6084.

SUPPLEMENTARY INFORMATION:

Request for Comments

The Coast Guard encourages interested persons to participate in this rulemaking by submitting written data, views or arguments for or against this rule. Persons submitting comments should include names and addresses, identify the rulemaking [CGD09–01–148] and the specific section of this proposal to which each comment applies, and give the reason(s) for each comment. Please submit all comments and attachments in an unbound format, no larger than 8½ by 11 inches, suitable for copying and electronic filing. Persons wanting acknowledgement of receipt of comments should enclose a stamped, self-addressed postcard or envelope.

The Coast Guard plans no public hearing. Individuals may request a public hearing by writing to the address under **ADDRESSES.** The request should include the reasons why a hearing would be beneficial. If the Coast Guard determines that the opportunity for oral presentation will aid this rulemaking, we will hold a public hearing at a time and place announced by a subsequent notice in the **Federal Register**.

Background and Purpose

The City of Chicago has requested that Commander, Ninth Coast Guard District, revise the operating regulations for Chicago City operated drawbridges over Chicago River waterways. The primary changes are: (1) Remove the requirements for Kinzie Street bridge over the North Branch and Cermak Road bridge over the South Branch to open on signal for commercial vessels due to restrictive clearances. Both bridges have been raised to provide vertical clearances consistent with other fixed and moveable bridges on the Chicago River system. (2) Add Division Street bridge over the North Branch of Chicago River to the current list of drawbridges not required to open for vessels. (3) Require a 12-hour advance notice requirement for bridge openings from commercial vessels for City of Chicago moveable bridges throughout the year. (4) Clarify rush hour times (7 a.m. to 10 a.m. and 4 p.m. to 6:30 p.m.—Monday through Friday, with the exception of Federal holidays) that City of Chicago bridges would not be required to open for any vessels.

Discussion of Proposed Rule

The current operating regulations for Chicago River bridges are contained in 33 CFR 117.391. This section was last changed on October 6, 1995 (60 FR 52311) to establish opening schedules for recreational vessels. This proposed rule only alters the sections pertaining to recreational vessels by specifying rush hour times (7 a.m. to 10 a.m. and 4 p.m. to 6:30 p.m.—Monday through Friday, with the exception of Federal holidays) that bridges would not be required to open.

The City of Chicago requested that both Kinzie Street bridge over North Branch and Cermak Road bridge over South Branch be granted the same status as all other City of Chicago bridges and

only be required to open for commercial vessels if at least 12-hours advance notice is provided. The bridges have been raised to provide vertical clearances consistent with other fixed and moveable bridges on the Chicago River system.

The City has also requested that Division Street bridge over North Branch not be required to open for vessels. This would place the bridge in the same status as all other City bridges for a vessel proceeding northbound on North Branch above Division Street. There is adequate clearance for commercial vessels equipped with retractable pilothouses to pass under each of these bridges. There are currently no recreational vessel facilities from Division Street northward that require the opening of drawbridges for masted vessels. A marina south of Division Street services masted vessels, therefore, all bridges southward are still required to open in accordance with the articles pertaining to recreational vessels. Bridge opening logs provided by the City indicate that the last request for a bridge opening at Division Street occurred in 1982.

This proposed rule would also update the current ownership of railroad bridges on Chicago River and remove the emergency provisions specifically listed in paragraph (e). These provisions apply to all drawbridges, as noted in 33 CFR 117.31, and need not be re-stated in this regulation.

Regulatory Evaluation

This proposed rule is not a significant regulatory action under section 3(f) of Executive Order 12866 and does not require an assessment of potential costs and benefits under section 6(a)(3) of that order. The Office of Management and Budget has not reviewed it under that Order. It is not significant under the regulatory policies and procedures of the Department of Transportation (DOT) (44 FR 11040; February 26, 1979). The Coast Guard expects the economic impact of this rule to be so minimal that a full Regulatory Evaluation under paragraph 10e of the regulatory policies and procedures of DOT is unnecessary.

This determination is based on the current and prospective facilities and needs of all navigation on the Chicago River system.

Small Entities

Under the Regulatory Flexibility Act (5 U.S.C. 601 *et seq.*), the Coast Guard must consider whether this proposed rule will have a significant impact on a substantial number of small entities. ''Small entities'' may include small businesses and not-for-profit organizations that are independently owned and operated and are not dominant in their fields, and governmental jurisdictions with populations of less than 50,000 people.

The identified small entities operating on Chicago River would not be significantly affected by the proposed rule. Marinas located on the North Branch and South Branch of Chicago River would still have bridge openings during designated times. However, rush hour times, where no openings would be required, have been expanded. These entities do not require openings of bridges from Division Street northward on North Branch. In addition, the three identified commercial tug companies operating on Chicago River do not require openings of Chicago City bridges.

Therefore, the Coast Guard certifies under 5 U.S.C 605(b) that this proposed rule will not have a significant economic impact on a substantial number of small entities.

If you think that your business, organization, or governmental jurisdiction qualifies as a small entity and that this proposed rule would have a significant economic impact on it, please submit a comment (*see* **ADDRESSES**) explaining why you think it qualifies and how and to what degree this proposed rule would economically affect it.

Assistance for Small Entities

Under section 213(a) of the Small Business Regulatory Enforcement Fairness Act of 1996 (Public Law 104–121), we want to assist small entities in understanding this proposed rule so that they can better evaluate its effects on them and participate in the rulemaking. If the proposed rule would affect your small business, organization, or governmental jurisdiction and you have questions concerning its provisions or options for compliance, please contact the Bridge Administration Branch, Ninth Coast Guard District, at the address above.

Collection of Information

This proposed rule would call for no new collection of information requirement under the Paperwork Reduction Act (44 U.S.C. 3501 *et seq.*).

Federalism

The Coast Guard has analyzed this proposed rule under the principles and criteria contained in Executive Order 13132, and determined that this rule does not have federalism implications under that Order.

Unfunded Mandates Reform Act

The Unfunded Mandates Reform Act of 1995 (2 U.S.C. 1531–1538) requires Federal agencies to assess the effects of their discretionary regulatory actions. In particular, the Act addresses actions that may result in the expenditure by a State, local, or tribal government, in the aggregate, or by the private sector of $100,000,000 or more in any one year. Though this rule will not result in such expenditure, we do discuss the effects of this rule elsewhere in this preamble.

Taking of Private Property

This proposed rule will not effect a taking of private property or otherwise have taking implications under Executive Order 12630, Governmental Actions and Interference with Constitutionally Protected Property Rights.

Civil Justice Reform

This proposed rule meets applicable standards in sections 3(a) and 3(b)(2) of Executive Order 12988, Civil Justice Reform, to minimize litigation, eliminate ambiguity, and reduce burden.

Protection of Children

We have analyzed this proposed rule under Executive Order 13045, Protection of Children from Environmental Health Risks and Safety Risks. This rule is not an economically significant rule and does not concern an environmental risk to health or risk to safety that may disproportionately affect children.

Indian Tribal Governments

This proposed rule does not have tribal implications under Executive Order 13175, Consultation and Coordination with Indian Tribal Governments, because it would not have a substantial direct effect on one or more Indian tribes, on the relationship between the Federal Government and Indian tribes, or on the distribution of power and responsibility between the Federal Government and Indian tribes.

Energy Effects

We have analyzed this proposed rule under Executive Order 13211, Actions Concerning Regulations That Significantly Affect Energy Supply, Distribution, or Use. We have determined that it is not a ''significant energy action'' under that order because it is not a ''significant regulatory action'' under Executive Order 12866 and it is not likely to have a significant adverse effect on the supply, distribution, or use of energy. It has not been designated by the Administrator of the Office of

Information and Regulatory Affairs as a significant energy action. Therefore, it does not require a Statement of Energy Effects under Executive Order 13211.

Environment

The Coast Guard considered the environmental impact of this proposed rule and concluded that, under figure 2–1, paragraph 32(e) of Commandant Instruction M16475.lD, this proposed rule is categorically excluded from further environmental documentation. A ''Categorical Exclusion Determination'' is available in the docket where indicated under **ADDRESSES.**

List of Subjects in 33 CFR Part 117 Bridges.

For reasons set out in the preamble, the Coast Guard proposes to amend Part 117 of Title 33, Code of Federal Regulations, as follows:

PART 117—DRAWBRIDGE OPERATION REGULATIONS

1. The authority citation for Part 117 continues to read as follows:

Authority: 33 U.S.C. 499; 49 CFR 1.46; 33 CFR 1.05–1(g); section 117.255 also issued under the authority of Pub. L. 102–587, 106 Stat. 5039.

2. In § 117.391, revise the introductory text, paragraphs (a)(1), (b)(1)(iv), (b)(2), and (c); and remove paragraphs (d) and (e), to read as follows:

§ 117.391 Chicago River.

The draws of the bridges operated by the City of Chicago over the Main Branch of Chicago River, the bridges on the North Branch of Chicago River from the Main Branch to North Halsted Street, mile 2.65, and bridges on the South Branch of Chicago River from the Main Branch to South Ashland Avenue, mile 4.47, shall operate as follows:

(a) For commercial vessels:

(1) All bridges shall open on signal if at least 12-hours advance notice is provided to the Chicago City Bridge Desk prior to the intended time of passage; except that, from Monday through Friday between the hours of 7 a.m. and 10 a.m., and between the hours of 4 p.m. and 6:30 p.m., except for Federal holidays, the draws need not open for the passage of vessels.

* * * * *

(b) * * *

(1) * * *

(i) * * *

(iv) That draws shall open at times in addition to those listed in paragraphs (b)(1)(i) through (b)(1)(iii) of this section, after notice has been given at least 20 hours in advance requesting passage for a flotilla of at least five vessels. However, the bridges need not open Monday through Friday from 7 a.m. to 10 a.m., and 4 p.m. to 6:30 p.m., except for Federal holidays.

(2) From December 1 through March 31, the draws shall open on signal if at least 48 hours notice is given. However, the bridges need not open Monday through Friday from 7 a.m. to 10 a.m., and 4 p.m. to 6:30 p.m., except for Federal holidays.

* * * * *

(c) The following bridges need not be opened for the passage of vessels: The draws of South Damen Avenue, mile 6.14, over South Branch of Chicago River; all highway drawbridges between South Western Avenue, mile 6.7, and Willow Springs Road, mile 19.4, over Chicago Sanitary and Ship Canal; North Halsted Street, mile 2.85, and Division Street, mile 2.99, over North Branch Canal of Chicago River; and Division Street, mile 3.30, North Avenue, mile 3.81, Cortland Avenue, mile 4.48, Webster Avenue, mile 4.85, North Ashland Avenue, mile 4.90, and Union Pacific Railroad, mile 5.01, over North Branch of Chicago River.

Dated: November 27, 2001.

James D. Hull,

Rear Admiral, U.S. Coast Guard, Commander, Ninth Coast Guard District.

[FR Doc. 01–31842 Filed 12–26–01; 8:45 am]

BILLING CODE 4910–15–P

ENVIRONMENTAL PROTECTION AGENCY

40 CFR Part 80

[FRL–7122–1]

RIN 2060–AJ76

Prohibition on Gasoline Containing Lead or Lead Additives for Highway Use: Fuel Inlet Restrictor Exemption for Motorcycles

AGENCY: Environmental Protection Agency (EPA).

ACTION: Withdrawal of direct final rule.

SUMMARY: EPA published a direct final rule on October 31, 2001 that exempts motorcycles with emission control devices that could be affected by the use of leaded gasoline from having to be equipped with gasoline tank filler inlet restrictors. However, we received an adverse comment during the 30 day comment period and are now withdrawing that direct final rule.

DATES: As of December 27, 2001, EPA withdraws the direct final rule published at 66 FR 54955, on October 31, 2001.

FOR FURTHER INFORMATION CONTACT: Richard Babst at (202) 564–9473.

SUPPLEMENTARY INFORMATION: Because EPA received adverse comment, we are withdrawing the direct final rule for ''Prohibition on Gasoline Containing Lead or Lead Additives for Highway Use: Fuel Inlet Restrictor Exemption For Motorcycles.'' We published the direct final rule on October 31, 2001 (66 FR 54955), that exempts motorcycles with emission control devices that could be affected by the use of leaded gasoline from having to be equipped with gasoline tank filler inlet restrictors. We stated in that **Federal Register** document that if we received adverse comment by November 30, 2001, we would publish a timely notice of withdrawal in the **Federal Register**. We subsequently received adverse comment on that direct final rule. We will address the comment in a subsequent final action based on the parallel proposal also published on October 31, 2001 (66 FR 54965). As stated in the parallel proposal, we will not institute a second comment period on this action.

Dated: December 19, 2001.

Jeffrey R. Holmstead,

Assistant Administrator for Office of Air and Radiation.

[FR Doc. 01–31797 Filed 12–26–01; 8:45 am]

BILLING CODE 6560–50–P

FEDERAL COMMUNICATIONS COMMISSION

47 CFR Part 73

[DA 01–2868, MM Docket No. 01–334, RM–10343]

Digital Television Broadcast Service; Green Bay, WI

AGENCY: Federal Communications Commission.

ACTION: Proposed rule.

SUMMARY: The Commission requests comments on a petition filed by CBS Broadcasting Inc., licensee of station WFRV–TV, NTSC channel 5, Green Bay, Wisconsin, requesting the substitution of DTV channel 39 for DTV channel 56 at Green Bay. DTV Channel 39 can be allotted to Green Bay, Wisconsin, in compliance with the principle community coverage requirements of Section 73.625(a) at reference coordinates 44–20–01 N. and 87–58–56 W. However, since Green Bay is located within 400 kilometers of the U.S.-Canadian border, concurrence from the Canadian government must be obtained

for this allotment. As requested, we propose to allot DTV Channel 39 to Green Bay with a power of 1000 and a height above average terrain (HAAT) of 364 meters.

DATES: Comments must be filed on or before February 4, 2002, and reply comments on or before February 19, 2002.

ADDRESSES: Federal Communications Commission, 445 12th Street, SW., Room TW–A325, Washington, DC 20554. In addition to filing comments with the FCC, interested parties should serve the petitioner, or its counsel or consultant, as follows: Raymond A. White, Assistant General Counsel, CBS Broadcasting Inc., 600 New Hampshire Avenue, Suite 1200, Washington, DC 20037.

FOR FURTHER INFORMATION CONTACT: Pam Blumenthal, Mass Media Bureau, (202) 418–1600.

SUPPLEMENTARY INFORMATION: This is a synopsis of the Commission's Notice of Proposed Rule Making, MM Docket No. 01–334, adopted December 13, 2001, and released December 19, 2001. The full text of this document is available for public inspection and copying during regular business hours in the FCC Reference Information Center, Portals II, 445 12th Street, SW., Room CY–A257, Washington, DC, 20554. This document may also be purchased from the Commission's duplicating contractor, Qualex International, Portals II, 445 12th Street, SW., Room CY–B402, Washington, DC, 20554, telephone 202–863–2893, facsimile 202–863–2898, or via-e-mail qualexint@aol.com.

Provisions of the Regulatory Flexibility Act of 1980 do not apply to this proceeding.

Members of the public should note that from the time a Notice of Proposed Rule Making is issued until the matter is no longer subject to Commission consideration or court review, all *ex parte* contacts are prohibited in Commission proceedings, such as this one, which involve channel allotments. See 47 CFR 1.1204(b) for rules governing permissible *ex parte* contacts.

For information regarding proper filing procedures for comments, see 47 CFR 1.415 and 1.420.

List of Subjects in 47 CFR Part 73

Television, Digital television broadcasting.

For the reasons discussed in the preamble, the Federal Communications Commission proposes to amend 47 CFR part 73 as follows:

PART 73—TELEVISION BROADCAST SERVICES

1. The authority citation for part 73 continues to read as follows:

Authority: 47 U.S.C. 154, 303, 334, and 336.

§73.622 [Amended]

2. Section 73.622(b), the Table of Digital Television Allotments under Wisconsin is amended by removing DTV Channel 56 and adding DTV Channel 39 at Green Bay.

Federal Communications Commission

Barbara A. Kreisman,

Chief, Video Services Division, Mass Media Bureau.

[FR Doc. 01–31831 Filed 12–26–01; 8:45 am]

BILLING CODE 6712–01–P

DEPARTMENT OF THE INTERIOR

Fish and Wildlife Service

50 CFR Part 17

RIN 1018–AI19

Endangered and Threatened Wildlife and Plants; Listing the Tumbling Creek Cavesnail as Endangered

AGENCY: Fish and Wildlife Service, Interior.

ACTION: Proposed rule.

SUMMARY: We, the Fish and Wildlife Service (Service), propose to list the Tumbling Creek cavesnail, *Antrobia culveri,* as endangered pursuant to the Endangered Species Act of 1973, as amended (Act). An emergency rule listing this species as endangered for 240 days is published concurrently in this issue of the **Federal Register**. This species is known to occur in one cave in Missouri. The distribution of this species has decreased in Tumbling Creek by 90 percent since 1974. Although cavesnail numbers fluctuated seasonally and annually between 1996 and 2000, it was not found in the monitored section of the cave stream during five surveys in 2001. A few individuals continue to be found in an upstream area, but the population has declined so drastically that the species is on the verge of extinction. Reasons for the decline are unknown, but are likely caused by activities in Tumbling Creek Cave's surface recharge area that have degraded the stream's water quality. Critical habitat is not being proposed at this time. We solicit additional data, information, and comments from the public that may assist us in making a final decision on this proposed action.

DATES: Comments from all interested parties must be received by February 25, 2002. Public hearing requests must be received by February 11, 2002.

ADDRESSES: Comments and other materials concerning this proposal should be sent to the Field Supervisor, Columbia, Missouri Field Office, U.S. Fish and Wildlife Service, 608 E. Cherry St., Room 200, Columbia, Missouri 65201–7712. Comments and materials received, as well as the supporting documentation used in preparing the rule, will be available for public inspection, by appointment, during normal business hours at the above address.

FOR FURTHER INFORMATION CONTACT: Dr. Paul McKenzie at the address listed above (telephone: 573–876–1911, ext. 107; email: paul_mckenzie@fws.gov; facsimile: 573–876–1914; or Mr. Ron Refsnider, U.S. Fish and Wildlife Service, Bishop Henry Whipple Federal Building, 1 Federal Drive, Fort Snelling, Minnesota 55111–4056; telephone: 612–713–5346; email: ron_refsnider@fws.gov; facsimile: 612–713–5292).

SUPPLEMENTARY INFORMATION:

Background

For a discussion of biological background information, previous Federal actions, factors affecting the species, critical habitat, and conservation measures available, consult the emergency rule for the Tumbling Creek cavesnail published concurrently in this issue of the **Federal Register**.

Public Comments Solicited

We intend that any final action resulting from this proposal will be as accurate and as effective as possible. Therefore, we solicit comments or suggestions from the public, other concerned governmental agencies, the scientific community, industry, or any other interested party concerning this proposed rule. We particularly seek comments concerning:

(1) Biological, commercial trade, or other relevant data concerning any threat (or lack thereof) to this species;

(2) The location of any additional populations of this species;

(3) Additional information concerning the range, distribution, and population size of this species;

(4) Current or planned activities in the subject area and their possible impacts on this species; and

(5) The reasons why any habitat should or should not be determined to be critical habitat as provided by section 4 of the Act.

In making any final decision on this proposal we will take into consideration the comments and any additional information we receive, and such communications may lead to a final regulation that differs from this proposal.

The Act requires that a public hearing be held if requested within 45 days of the date of publication of a proposed rule. Such requests must be made in writing and must be addressed to the Field Supervisor of our Columbia, Missouri, Field Office. (*See* **ADDRESSES** section).

National Environmental Policy Act

We have determined that an Environmental Assessment or Environmental Impact Statement, as defined under the authority of the National Environmental Policy Act of 1969, need not be prepared in connection with regulations adopted pursuant to section (4)(a) of the Endangered Species Act. We published a notice outlining our reasons for this determination in the **Federal Register** on October 25, 1983 (48 FR 49244).

Paperwork Reduction Act

This rule does not contain any collections of information other than those already approved under the Paperwork Reduction Act, 44 U.S.C. 3501 *et seq.*, and assigned Office of Management and Budget clearance number 1018–0094. An agency may not conduct or sponsor, and a person is not required to respond to, a collection of information unless it displays a currently valid control number. For additional information concerning permit and associated requirements for endangered species, see 50 CFR 17.21 and 17.22.

Author

The primary author of this proposed rule is Paul McKenzie, Ph.D., of our Columbia, Missouri, Field Office (see **ADDRESSES** section).

List of Subjects in 50 CFR Part 17

Endangered and threatened species, Exports, Imports, Reporting and recordkeeping requirements, Transportation.

Proposed Regulation Promulgation

For the reasons given in the preamble to the emergency rule listing the Tumbling Creek cavesnail as endangered, published concurrently in this issue of the **Federal Register**, we propose to amend part 17, subchapter B of chapter I, title 50 of the Code of Federal Regulations, as set forth below:

PART 17—[AMENDED]

1. The authority citation for part 17 continues to read as follows:

Authority: 16 U.S.C. 1361–1407; 16 U.S.C. 1531–1544; 16 U.S.C. 4201–4245; Pub. L. 99–625, 100 Stat. 3500, unless otherwise noted.

2. Amend § 17.11(h) by adding the following, in alphabetical order under SNAILS, to the List of Endangered and Threatened Wildlife:

§ 17.11 Endangered and threatened wildlife.

* * * * *

(h) * * *

Species		Historic range	Vertebrate population where endangered or threatened	Status	When listed	Critical habitat	Special rules
Common name	Scientific name						
*	*	*	*	*	*	*	
SNAILS							
*	*	*	*	*	*	*	
Cavesnail, Tumbling Creek.	*Antrobia culveri*	U.S.A. (MO)	NA	E		NA	NA
*	*	*	*	*	*	*	

Dated: December 10, 2001.

Marshall P. Jones Jr.,

Acting Director, Fish and Wildlife Service.

[FR Doc. 01–31306 Filed 12–26–01; 8:45 am]

BILLING CODE 4310–55–P

Notices

Federal Register

Vol. 66, No. 248

Thursday, December 27, 2001

This section of the FEDERAL REGISTER contains documents other than rules or proposed rules that are applicable to the public. Notices of hearings and investigations, committee meetings, agency decisions and rulings, delegations of authority, filing of petitions and applications and agency statements of organization and functions are examples of documents appearing in this section.

DEPARTMENT OF AGRICULTURE

Forest Service

Lassen National Forest; California; Lakes Forest Recovery Project

AGENCY: Forest Service, USDA

ACTION: Cancellation of Notice of Intent.

SUMMARY: This notice cancels the Notice of Intent to analyze the Lakes Forest Recovery Project on the Lassen National Forest, published in the **Federal Register** on December 13, 2000 (Volume 65, Number 240, 77848–77849). The Lakes Forest Recovery Project was cancelled because the area in which the project was to be implemented has been incorporated into another project known as the Treatment Unit-1 Project.

ADDRESSES: Almanor District Ranger, Lassen National Forest, P.O. Box 767, Chester, CA, 96020.

FOR FURTHER INFORMATION CONTACT: Dominic Cesmat, Interdisciplinary Team Leader, telephone (530) 258–2141.

SUPPLEMENTARY INFORMATION: A Notice of Intent to prepare an environmental impact statement for the Lakes Forest Recovery Project was published in the **Federal Register** on December 13, 2000 (Volume 65, Number 240, 77848–77849). The Lakes Forest Recovery Project was designed to reduce wildland fire hazard, promote forest health and provide economic benefits as described within the Herger-Feinstein Quincy Library Group Forest Recovery Act of October 21, 1998. From the date of that filing, the Lassen National Forest's Land and Resource Management Plan has been amended by the signing of the Record of Decision (January 12, 2001) by the Regional Forester for the Sierra Nevada Forest Plan Amendment (SNFPA) Final Environmental Impact Statement. The Record of Decision made changes to the way Herger-Feinstein Quincy Library Group projects are implemented.

Amongst changes to the Lassen National Forest's Land and Resource Management Plan, the Record of Decision for the SNFPA called for an administrative study to examine the relationship between management-caused changes in vegetation and their effects on California spotted owl habitat and spotted owl population dynamics. One of the proposed administrative study areas, known as Treatment Unit-1, includes a large portion of the Lakes Forest Recovery Project area. Based on the changes to the Land and Resource Management Plan, the planning effort on the Lakes Forest Recovery Project was stopped, and a new planning effort has begun on the Treatment Unit-1 Project.

Dated: December 14, 2001.

Edward C. Cole,

Forest Supervisor.

[FR Doc. 01–31731 Filed 12–26–01; 8:45 am]

BILLING CODE 3410–11–M

DEPARTMENT OF AGRICULTURE

Forest Service

Oregon Coast Provincial Advisory Committee Meeting

AGENCY: Forest Service, USDA.

ACTION: Notice of meeting.

SUMMARY: The Oregon Coast Provincial Advisory Committee (PAC) will meet on January 17, 2002. The meeting will begin at 9 a.m., in the Siuslaw River Room, at Siuslaw National Forest Headquarters, 4077 SW Research Way, Corvallis, OR. Agenda items will include: Grand Ronde Stewardship; 2001 in Review; Focus on the Coming Year (theme, projects, topics); and Round Robin Information Sharing. A fifteen-minute public comment period is scheduled at 1:45 p.m. The committee welcomes the publics' written comments on committee business at any time. The meeting should end around 3:00 p.m. Interested citizens are encouraged to attend. Lunch will be on your own in Corvallis.

FOR FURTHER INFORMATION CONTACT: Joni Quarnstrom, Public Affairs Specialist, Siuslaw National Forest, 541/750–7075 or write to Forest Supervisor, Siuslaw National Forest, P.O. Box 1148, Corvallis, OR 97339.

Dated: December 19, 2001.

Gloria D. Brown,

Forest Supervisor.

[FR Doc. 01–31739 Filed 12–26–01; 8:45 am]

BILLING CODE 3410–11–M

DEPARTMENT OF AGRICULTURE

Forest Service

Siskiyou County Resource Advisory Committee (RAC); Meeting

AGENCY: Forest Service, USDA.

ACTION: Notice of meeting.

SUMMARY: The Siskiyou County Resource Advisory Committee (RAC) will meet on January 21, 2002, in Yreka, California. The purpose of the meeting is organizational and will serve as an orientation to RAC committee members regarding the Secure Rural School and Community Self-Determination Act of 2000.

DATES: The meeting will be held January 21, 2002 from 3 p.m. to 8 p.m.

ADDRESSES: The meeting will be held at the Miners Inn and Convention Center, 122 E. Miner Street, Yreka, California.

FOR FURTHER INFORMATION CONTACT: Heidi Perry, Meeting Coordinator, USDA, Klamath National Forest, 1312 Fairlane Road, Yreka, California, 96097, (530) 841–4468; e-mail *hperry@fs.fed.us.*

SUPPLEMENTARY INFORMATION: Agenda items to be covered include: (1) Roles and Responsibilities for Advisory Committees; (2) Rules, Operational Guides and Conflict of Interests; (3) Project Submittal Process; (4) Project Timelines (5) Public Proposal Workshop (6) Public Comment. The meeting is open to the public. Public input opportunity will be provided and individuals will have the opportunity to address the Committee at that time.

Dated: December 13, 2001.

Margaret J. Boland,

Forest Supervisor.

[FR Doc. 01–31698 Filed 12–26–01; 8:45 am]

BILLING CODE 3410–11–M

DEPARTMENT OF AGRICULTURE

Forest Service

Siuslaw Resource Advisory Committee Meeting

AGENCY: Forest Service, USDA.

ACTION: Notice of meeting.

SUMMARY: The Siuslaw Resource Advisory Committee (RAC) will meet on January 25, 2002. The meeting will begin at 9:30 a.m., in the Siuslaw Valley Fire & Rescue Station, 2625 Highway 101 N., Florence, OR. Agenda items will include: Federal Advisory Committee Act (FACA) Overview; Roles and Responsibilities for Advisory Committees; Rules/Operational Guides/Bylaws; ''The RAC Guidebook;'' How to Stay Connected/Means of Communication; Flow of Work (Future Agendas & Meeting Dates); Project Process & Contracting; Election of RAC Chairperson; and Public Forum (at approximately 3:20 p.m.). The meeting is expected to adjourn at 4:00 p.m. Interested citizens are encouraged to attend.

FOR FURTHER INFORMATION CONTACT: Linda Stanley, Community Development Specialist, Siuslaw National Forest, 541/750–7210 or write to Forest Supervisor, Siuslaw National Forest, P.O. Box 1148, Corvallis, OR 97339.

Dated: December 19, 2001.

Gloria D. Brown,

Forest Supervisor.

[FR Doc. 01–31738 Filed 12–26–01; 8:45 am]

BILLING CODE 3410–11–M

DEPARTMENT OF AGRICULTURE

Natural Resources Conservation Service

EQIP for GPAs, New Mexico

AGENCY: Natural Resources Conservation Service, USDA.

ACTION: Notice of a finding of no significant impact.

SUMMARY: Pursuant to section 102(2)(c) of the National Environmental Policy Act of 1969; the Council on Environmental Quality Regulations (40 CFR part 1500); and the Natural Resources Conservation Service Regulations (7 CFR part 650); the U.S. Department of Agriculture, Natural Resources Conservation Service, in New Mexico, gives notice that an environmental impact statement is not being prepared for: Dry Cropland in Parts of Curry, Quay, and Roosevelt Counties, Santa Clara Pueblo Irrigated Lands in Rio Arriba County. Irrigated Cropland in Curry and Roosevelt Counties, Socorro County Irrigated Valley and Rio Cebolla in Rio Arriba County.

FOR FURTHER INFORMATION CONTACT: Rosendo Trevino III, State Conservationist; Natural Resources Conservation Service; 6200 Jefferson, NE; Albuquerque, NM 87109–3734; Telephone (505)761–4400.

Copies of these environmental assessements are available from NRCS in Albuquerque, NM and are also available electronically on the NRCS New Mexico Internet Homepage at: *http://www.nm.nrfcs.usda.gov/techserv/ea.htm.*

SUPPLEMENTARY INFORMATION: The environmental assessments of these federally assisted action indicates that the projects will not cause significant local, regional, or national effects on the human environment. As a result of these findings, Rosendo Trevino III, State Conservationist, has determined that the preparation and review of an environmental impact statement are not needed for these project. Basic data developed during the environmental assessment is on file and may be reviewed by contacting Rosendo Trevino III.

No administrative action on implementation of the proposed action will be taken until 30 days after the date of this publication in the **Federal Register**.

Dated: December 10, 2001.

Rosendo Trevino III,

State Conservationist.

[FR Doc. 01–31744 Filed 12–26–01; 8:45 am]

BILLING CODE 3410–16–P

DEPARTMENT OF AGRICUTURE

Natural Resources Conservation Service

Description of System To Rank and Approve Requests for Assistance for Rehabilitation of Aging Watershed Dams

AGENCY: Natural Resources Conservation Service, USDA.

ACTION: Notice of availability.

SUMMARY: Pursuant to Section 14 (f) of the Watershed Protection and Flood Prevention Act (Pub. L. 83–566), as amended (16 U.S.C. 1012); The Natural Resources Conservation Service, U.S. Department of Agriculture, gives notice that a system to rank and approve requests for rehabilitation of watershed dams has been prepared for use in implementation of a rehabilitation program.

FOR FURTHER INFORMATION CONTACT: Larry W. Caldwell, National Policy Coordinator for Aging Watershed Infrastructure, Natural Resources Conservation Service, 100 USDA Suite 206, Stillwater, Oklahoma 74074–2655.

SUPPLEMENTARY INFORMATION: Public Law 83–566 was amended by Section 313 of Public Law 106–472. One provision of this amendment directed the Secretary of Agriculture to establish a system of ranking and approving requests for rehabilitation of watershed dams. A description of the system that will be implemented in FY 2002 to establish a priority ranking of all applications for assistance received in a state has been developed. Copies of the description of this ranking and approval system are available upon request at the above address.

Roger L. Bensey,

Director, Watersheds and Wetlands Division.

[FR Doc. 01–31745 Filed 12–26–01; 8:45 am]

BILLING CODE 3410–16–P

AMTRAK REFORM COUNCIL

Notice of Meeting

AGENCY: Amtrak Reform Council.

ACTION: Notice of special public business meeting in Washington, DC.

SUMMARY: As provided in Section 203 of the Amtrak Reform and Accountability Act of 1997 (Reform Act), the Amtrak Reform Council (Council) gives notice of a special public meeting of the Council. On Friday, January 11, 2002, the Council will hold a Business Meeting from 9:30 a.m.–4 p.m. Eastern Standard Time (EST) during which time the Council members will discuss the various options for restructuring intercity rail passenger service.

During the last Council meeting on December 14, 2001, the Council discussed nine options for restructuring Amtrak. The Council then instructed the Council staff to reduce those options to three, and the Council will discuss those three options at the next Council meeting on January 11, 2002. The Council will determine, either at the January 11th Meeting, in a later meeting, or by a mail ballot, which option or options to adopt. The final recommendation will be submitted to Congress on February 7, 2002.

The Amtrak Reform Council on November 9, 2001 approved a resolution finding that Amtrak would not achieve operational self-sufficiency by December 2, 2002 as required by the Amtrak Reform and Accountability Act of 1997. The Council's finding started a 90-day clock in which the Council must submit an action plan for a restructured and rationalized national intercity rail passenger system to Congress.

DATES: The Business Meeting will be held on Friday, January 11, 2002, from 9:30 a.m.–4 p.m. EST. The event is open to the public.

ADDRESSES: The Business Meeting will take place in the Monet Suite (2nd Floor) in the Loews L'Enfant Hotel, 480 L'Enfant Plaza, SW., Washington, DC 20024. The nearest Metro stop is L'Enfant. Persons in need of special arrangements should contact the person listed below.

FOR FURTHER INFORMATION CONTACT: Deirdre O'Sullivan, Amtrak Reform Council, Room 7105, JM–ARC, 400 Seventh Street, SW., Washington, DC 20590, or by telephone at (202) 366–0591; FAX: 202–493–2061. For information regarding ARC's Finding Resolution, the ARC's Proposed Nine Options for Restructuring Amtrak, the ARC's two Annual Reports, information about ARC Council Members and staff, and much more, you can also visit the Council's website at www.amtrakreformcouncil.gov.

SUPPLEMENTARY INFORMATION: The ARC was created by the Amtrak Reform and Accountability Act of 1997 (Reform Act), as an independent commission, to evaluate Amtrak's performance and to make recommendations to Amtrak for achieving further cost containment, productivity improvements, and financial reforms. In addition, the Reform Act provides: that the Council is to monitor cost savings from work rules established under new agreements between Amtrak and its labor unions; that the Council submit an annual report to Congress that includes an assessment of Amtrak's progress on the resolution of productivity issues; and that, after a specified period, the Council has the authority to determine whether Amtrak can meet certain financial goals specified under the Reform Act and, if it finds that Amtrak cannot, to notify the President and the Congress.

The Reform Act prescribes that the Council is to consist of eleven members, including the Secretary of Transportation and ten others nominated by the President and the leadership of the Congress. Members serve a five-year term.

Issued in Washington, DC—December 19, 2001.

Thomas A. Till,

Executive Director.

[FR Doc. 01–31793 Filed 12–26–01; 8:45 am]

BILLING CODE 4910–06–P

COMMISSION ON CIVIL RIGHTS

Hearing on Environmental Justice; Sunshine Act Meeting

AGENCY: Commission on Civil Rights.

ACTION: Amendment of notice of hearing.

SUMMARY: Notice is hereby given pursuant to the provisions of the Civil Rights Commission Amendments Act of 1994, Section 3, Public Law 103–419, 180 Stat. 4338, as amended, and 45 CFR 702.3., that a public hearing before the U.S. Commission on Civil Rights will take place on Friday, January 11, 2002, at the Hilton Hotel, in the Monroe Room, 1919 Connecticut Avenue, NW., Washington, DC 20009, beginning at approximately 10:00 a.m., immediately following previously scheduled Commission business taking place earlier that morning. The purpose of this hearing is to collect information within the jurisdiction of the Commission, under Public Law 98–183, Section 5(a)(1) and Section 5(a)(5), related particularly to the effect of environmental hazards, including hazardous waste sites and industries located in, or near, low-income communities and communities of color, and the question of whether the civil rights of those communities in question are being violated.

The Commission is authorized to hold hearings and to issue subpoenas for the production of documents and the attendance of witnesses pursuant to 45 CFR 701.2. The Commission is an independent bipartisan, fact finding agency authorized to study, collect, and disseminate information, and to appraise the laws and policies of the Federal Government, and to study and collect information with respect to discrimination or denials of equal protection of the laws under the Constitution because of race, color, religion, sex, age, disability, or national origin, or in the administration of justice. Hearing impaired persons who will attend the hearings and require the services of a sign language interpreter, should contact Pamela Dunston, Administrative Services and Clearinghouse Division at (202) 376–8105 (TDD (202) 376–8116), at least five (5) working days before the scheduled date of the hearing.

FOR FURTHER INFORMATION CONTACT: Les Jin, Office of the Staff Director (202) 376–7700.

Dated: December 20, 2001.

Debra A. Carr,

Deputy General Counsel.

[FR Doc. 01–31914 Filed 12–21–01; 11:29 am]

BILLING CODE 6335–01–M

DEPARTMENT OF COMMERCE

International Trade Administration

[A–570–831]

Fresh Garlic From the People's Republic of China: Notice of Extension of Time Limit for the Final Results of Antidumping Duty New Shipper Review and the Final Results of Antidumping Duty Administrative Review

AGENCY: Import Administration, International Trade Administration, Department of Commerce.

ACTION: Notice of extension of time limit for the final results of antidumping duty new shipper review and the final results of antidumping duty administrative review.

SUMMARY: The Department of Commerce is extending the time limit for the final results of the new shipper and administrative reviews of the antidumping duty order on fresh garlic from the People's Republic of China. The new shipper review covers one exporter, Clipper Manufacturing Co. Ltd. The period of review is June 1, 2000, through November 30, 2000.[1] The administrative review covers four manufacturers/exporters and the period November 1, 1999, through October 31, 2000. At the request of the petitioner, the two reviews have been aligned and are being conducted simultaneously.

EFFECTIVE DATE: December 27, 2001.

FOR FURTHER INFORMATION CONTACT: Hermes Pinilla or Edythe Artman, AD/CVD Enforcement 3, Import Administration, International Trade Administration, U.S. Department of Commerce, 14th Street and Constitution Avenue, NW., Washington, DC 20230; telephone: (202) 482–3477 or (202) 482–3931, respectively.

The Applicable Statute

Unless otherwise indicated, all citations to the statute are references to the provisions effective January 1, 1995, the effective date of the amendments made to the Tariff Act of 1930 (the Act) by the Uruguay Round Agreements Act and all citations to the Department of

[1] The period of review for the new shipper review was established in accordance with 19 CFR 351.(g)(1)(ii)(B)

Commerce's regulations are to 19 CFR part 351 (2000).

Background

On February 9, 2001, the petitioner submitted a request for alignment of the new shipper and administrative reviews. Clipper Manufacturing Co. Ltd. responded to the Department that it did not object to the petitioner's request. See Memorandum to the File regarding alignment of new shipper and administrative reviews (Feb. 19, 2001). Therefore, we are conducting these two reviews simultaneously.

On August 24, 2001, the Department published the preliminary results of the new shipper and administrative reviews of the antidumping duty order on fresh garlic from the People's Republic of China. See *Fresh Garlic from the People's Republic of China; Preliminary Results of Antidumping New Shipper Review, Preliminary Results of Antidumping Duty Administrative Review, and Partial Rescission of Administrative Review,* 66 FR 44596 (August 24, 2001). We invited parties to comment on our preliminary results. With respect to the new shipper review, we received comments from the petitioner and the new shipper, Clipper Manufacturing Co. Ltd. We received comments from the petitioner and one of the respondents, Fook Huat Tong Kee Pte., Ltd., and Taian Fook Huat Tong Kee Foods Co., Ltd. (collectively FHTK), that pertained to the administrative review. The final results for these reviews are currently due no later than December 22, 2001.

Extension of Time Limits for Preliminary Results for New Shipper and Administrative Reviews

The comments we received concerning our preliminary results present a number of complex factual and legal questions about the assignment of antidumping duty margins. In addition, we have determined that, in the new shipper review, we may need additional information in order to complete our analysis in that review. Therefore, it is not practicable to complete the reviews within the time limits mandated by section 751(a)(3)(A) of the Act. Consequently, we are extending the time limit for the final results of the reviews to February 2, 2002.

Dated: December 18, 2001.

Richard W. Moreland,

Deputy Assistant Secretary for AD/CVD Enforcement I.

[FR Doc. 01–31836 Filed 12–26–01; 8:45 am]

BILLING CODE 3510–DS–P

DEPARTMENT OF COMMERCE

International Trade Administration

[A–580–807]

Polyethylene Terephthalate Film Sheet, and Strip From Korea; Notice of Rescission of Antidumping Duty Administrative Review

AGENCY: Import Administration, International Trade Administration, Department of Commerce.

ACTION: Notice of rescission of the antidumping duty administrative review.

SUMMARY: On July 23, 2001, in response to requests by Hyosung Corporation (Hyosung) and H.S. Industries (HSI), the Department of Commerce (the Department) published a notice of initiation of antidumping duty administrative review of Polyethylene Terephthalate Film, Sheet and Strip from Korea, for the period June 1, 2000 through May 31, 2001. *See Initiation of Antidumping and Countervailing Duty Administrative Reviews and Requests for Revocation in Part,* 66 FR 38252 (July 23, 2001). Hyosung has timely withdrawn its request for review; therefore, the Department is rescinding this review with respect to Hyosung in accordance with the withdrawal of their request for review. Furthermore, the Department revoked the order with respect to HSI subsequent to initiating this review. It would be inappropriate for the Department to continue to review entries of the subject merchandise by HSI. Therefore, the Department is rescinding this review with respect to HSI.

EFFECTIVE DATE: December 27, 2001.

FOR FURTHER INFORMATION CONTACT: Michael J. Heaney or Robert James, Enforcement Group III, Office 8, Import Administration, International Trade Administration, U.S. Department of Commerce, 14th Street and Constitution Avenue, NW., Washington, DC 20230; telephone (202) 482–4475 and (202) 482–0649, respectively.

SUPPLEMENTARY INFORMATION:

Applicable Statute and Regulations

Unless otherwise indicated, all citations to the Tariff Act of 1930, as amended (the Tariff Act), are references to the provisions effective January 1, 1995, the effective date of the Uruguay Round Agreements Act. In addition, unless otherwise indicated, all citations to the Department's regulations are to the regulations codified at 19 CFR part 351 (2001).

Background

On June 5, 1991 the Department published the antidumping duty order on polyethylene terephthalate film, sheet and strip from Korea. *See Antidumping Duty Order and Amendment to Final Determination of Less Than Fair Value: Polyethylene Terephthalate Film, Sheet and Strip from the Republic of Korea,* 56 FR 25660 (June 5, 1991). On June 29, 2001, HSI and Hyosung, producers of the subject merchandise, requested that the Department conduct an administrative review of their respective sales for the period June 1, 2001 through May 31, 2001. There were no other requests for review. On July 23, 2001, the Department published a notice of initiation of antidumping duty administrative review of polyethylene terephtalate film, sheet and strip from Korea, in accordance with 19 CFR 351.221(c)(1)(i). *See Initiation of Antidumping and Countervailing Duty Administrative Reviews and Requests for Revocation in Part,* 66 FR 38252 (July 23, 2001). On August 7, 2001, Hyosung withdrew its request for review. On November 15, 2001, we revoked the order with respect to HSI. (*See Polyethylene Terephthalate, Film, Sheet, and Strip from Korea: Final Results of Antidumping Duty Administrative Review and Revocation in Part* 66 FR 57417 (November 15, 2001)).

Rescission of Review

The Department's regulations provide that the Department will rescind an administrative review ''if a party that requested the review withdraws the request within 90 days of the date of publication of notice of initiation of the requested review.'' *See* 19 CFR 351.213(d)(1). Hyosung's withdrawal of its request for review was within the 90-day time limit. Therefore, the Department is rescinding this review with respect to Hyosung in accordance with 19 CFR 351.213(d)(1).

As a result of Hyosung's withdrawal of its request for review, the revocation of the order with respect to HSI, and because the Department received no other requests for review, the Department is rescinding the administrative review for the period June 1, 2000 through May 31, 2001, and will issue appropriate assessment instructions to the U.S. Customs Service.

This notice serves as a reminder to parties subject to administrative protective order (APO) of their responsibility concerning the disposition of proprietary information

disclosed under APO in accordance with 19 CFR 351.305(a)(3). Timely written notification of the return or destruction of APO materials or conversion to judicial protective order is hereby requested. Failure to comply with the regulations and terms of an APO is a sanctionable violation.

This determination is issued and published in accordance with 19 CFR 351.213(d)(4) and sections 751(a)(1) and 777(i)(1) of the Tariff Act.

Dated: December 19, 2001.

Barbara E. Tillman,

Acting Deputy Assistant Secretary for Import Administration, Group III.

[FR Doc. 01–31837 Filed 12–26–01; 8:45 am]

BILLING CODE 3510–DS–P

DEPARTMENT OF COMMERCE

International Trade Administration

Notice of Determination with Respect to Modification of Tariff Rate Quotas on the Import of Certain Worsted Wool Fabrics

AGENCY: International Trade Administration, Department of Commerce.

ACTION: The Department has recommended that no modification be made to the 2002 tariff rate quotas.

SUMMARY: The Department of Commerce has determined that the 2002 limitation on the quantity of imports of worsted wool fabrics that may be imported under the tariff rate quotas established by Title V of the Trade and Development Act of 2000 should not be modified.

FOR FURTHER INFORMATION CONTACT: Sergio Botero, Office of Textiles and Apparel, U.S. Department of Commerce, (202) 482–4058.

BACKGROUND:

Title V of the Trade and Development Act of 2000 (The Act) creates two tariff rate quotas, providing for temporary reductions in the import duties on two categories of worsted wool fabrics suitable for use in making suits, suit-type jackets, or trousers. For worsted wool fabric with average fiber diameters greater than 18.5 microns (Harmonized Tariff Schedule of the United States (HTS) heading 9902.51.11), the reduction in duty is limited to 2,500,000 square meters per year. For worsted wool fabric with average fiber diameters of 18.5 microns or less (HTS heading 9902.51.12), the reduction is limited to 1,500,000 square meters per year. Both these limitations may be modified by the President, not to exceed 1,000,000 square meters per year for each tariff rate quota.

The Act requires annual consideration of requests by U.S. apparel manufacturers for modification of the limitation on the quantity of fabric that may be imported under the tariff rate quotas, and grants the President the authority to proclaim modifications to the limitations. In determining whether to modify the limitations, specified U.S. market conditions with respect to worsted wool fabric and worsted wool apparel must be considered.

In Presidential Proclamation 7383, of December 1, 2000, the President authorized the Secretary of Commerce to determine whether the limitations on the quantity of imports of worsted wool fabrics under the tariff rate quotas should be modified and to recommend to the President that appropriate modifications be made.

On January 22, 2001 the Department published regulations establishing procedures for considering requests for modification of the limitations. 66 FR 6459, 15 C.F.R. 340. These procedures include an annual solicitation in the Federal Register of requests to modify the limitations, notice in the Federal Register of any such request(s) and a solicitation of public comments on such request(s).

The regulations provide that not more than 30 days following the close of the comment period, the Department will determine whether the limitations on the quantity of imports under the tariff rate quotas should be modified and recommend to the President that appropriate modifications be made.

On September 14, 2001 the Department published a notice of solicitation of requests for modification of the 2002 tariff rate quotas on the import of certain worsted wool fabric. The Department received four such requests, from Hartmarx Corporation and Hickey-Freeman, on behalf of themselves and the Tailored Clothing Association; Hartz & Company, Inc.; Hugo Boss; and Tom James Company. These requests were for the maximum increase (1,000,000 square meters) in each of the two tariff rate quota limitations (HTS 9902.51.11 and HTS 9902.51.12). On October 24, 2001, the Department solicited comments on the request for a period of 20 days. The Department received comments from seven companies/trade associations. Three of the respondents, the American Apparel and Footwear Association, Corbin Ltd., and Hardwick Clothes, supported the request for modification, and four of the respondents, Burlington Industries, the Northern Textile Association, Victor Forstmann, Inc., and the Warren Corporation, opposed the request for modification.

After reviewing the request, the comments received, and other information obtained, including a report prepared by the U.S. International Trade Commission, and after considering the specific market conditions set forth in the Act, the Department determined that the 2002 limitation on the quantity of imports of worsted wool fabrics that may be imported subject to the tariff rate quotas established by Title V of the Trade and Development Act of 2000 should not be modified. Accordingly, the Department has recommended to the President that no modification be made to the tariff rate quotas.

Dated: December 19, 2001.

D. Michael Hutchinson,

Acting Deputy Assistant Secretary for Textiles, Apparel and Consumer Goods Industries

[FR Doc.01–31701 Filed 12–26–01; 8:45 am]

BILLING CODE 3510–DR–S

DEPARTMENT OF COMMERCE

National Institute of Standards and Technology

[Docket No. 011204291–1291–01]

RIN 0693–ZA47

Small Grants Programs; Availability of Funds

AGENCY: National Institute of Standards and Technology, Commerce.

ACTION: Notice.

SUMMARY: The National Institute of Standards and Technology (NIST) announces that the following programs are soliciting applications for financial assistance for FY 2002: (1) The Precision Measurement Grants Program; (2) the 2002 Summer Undergraduate Research Fellowship (SURF) in the areas of Electronics and Electrical Engineering, Manufacturing Engineering, Chemical Science and Technology, Physics, Materials Science and Engineering, Building and Fire Research, and Information Technology; (3) the Electronics and Electrical Engineering (EEEL) Grants Program; (4) the Manufacturing Engineering Laboratory (MEL) Grants Program; (5) the Chemical Science and Technology Laboratory Grants Program; (6) the Physics Laboratory Grants Program; (7) the Materials Science and Engineering Grants Program; and (8) the Fire Research Grants Program.

The Precision Measurement Grants Program is seeking proposals for significant, primarily experimental,

research in the field of fundamental measurement or the determination of fundamental constants.

The programs ''SURFing the Electronics and Electrical Engineering Laboratory,'' ''SURFing the Manufacturing Engineering Laboratory,'' ''SURFing the Chemical Science and Technology Laboratory,'' ''SURFing the Physics Laboratory,'' ''SURFing the Materials Science and Engineering Laboratory,'' ''SURFing the Building and Fire Research Laboratory,'' and ''SURFing the Information Technology Laboratory;,'' will provide an opportunity for the NIST Electronics and Electrical Engineering Laboratory (EEEL), Manufacturing Engineering Laboratory (MEL), Chemical Science and Technology Laboratory (CSTL) Physics Laboratory (PL), Materials Science and Engineering Laboratory (MSEL), Building and Fire Research Laboratory (BRFL), and Information Technology Laboratory (ITL), and the National Science Foundation (NSF) to join in a partnership to encourage outstanding undergraduate students to pursue careers in science and engineering.

The EEEL program will provide research opportunities with internationally known NIST scientists in the fields of semiconductors (including mainstream silicon, power devices, and compound semiconductors), fundamental electrical measurements, electronic instrumentation, electrical systems, and electronic information. The MEL program will provide research opportunities with internationally known NIST scientists in the fields of intelligent systems, manufacturing petrology, precision engineering, and manufacturing systems integration. The CSTL program will provide research opportunities with internationally known NIST scientists in the fields of chemical characterization of materials, process metrology, chemical and biochemical sensing, nanotechnology, healthcare measurements, environmental measurements, microelectronics, physical property data, chemical and biochemical data, bio-molecules and materials, DNA technologies, and international measurement standards. The PL program will involve students in world-class atomic, molecular, optical (AMO) and radiation physics research with internationally known physicists in the NIST Physics Laboratory. The MSEL program will provide research opportunities with internationally known NIST scientists in the fields of ceramics, solid state chemistry, metallurgy, polymers, neutron condensed matter science, and materials reliability. The BFRL program will provide research opportunities with internationally known NIST scientists in the fields of building materials (concrete, coating), structure (earthquake), building environment (indoor air quality, thermal machinery), and fire science and engineering. The ITL program will provide research opportunities with internationally known NIST scientists in the fields of networking, software quality, security, information access, convergent systems, mathematical science, and statistics. The NIST Program Directors will work with physics, chemistry, materials science, manufacturing engineering, intelligent systems, automated production, precision engineering, information technology, building materials, constructed structures, and other science-related department chairs and directors of multi-disciplinary academic organizations to identify outstanding undergraduates (including graduating seniors) who would benefit from off-campus summer research in an honors academy environment.

The Electronics and Electrical Engineering (EEEL) Grants Program provides grants and cooperative agreements for the development of fundamental electrical metrology and of metrology supporting industry and government agencies in the board areas of semiconductors, electronic instrumentation, radio-frequency technology, optelectronics, magnetics, video, electronic commerce as applied to electronic products and devices, the transmission and distribution of electrical power, national electrical standards (fundamental, generally quantum based physical standards), and law enforcement standards.

The Manufacturing Engineering Laboratory (MEL) Grants Program will provide grants and cooperative agreements in the following fields of research: Dimensional Metrology for Manufacturing, Mechanical Metrology for Manufacturing, Intelligent Systems, and Information Systems Integration for Applications in Manufacturing.

The Chemical Science and Technology Laboratory (CSTL) Grants Program will provide grants and cooperative agreements in the following fields of research: Biotechnology, Process Measurements, Surface and Microanalysis Science, Physical and Chemical Properties, and Analytical Chemistry.

The Physics Laboratory (PL) Grants Program will provide grants and cooperative agreements in the following fields of research: Electron and Optical Physics, Atomic Physics, Optical Technology, Ionizing Radiation, and Time and Frequency.

The Materials Science and Engineering Laboratory (MSEL) Grants Program will provide grants and cooperative agreements in the following fields of research: Ceramics, Metallurgy, Polymer Sciences, Neutron Scattering Research and Spectroscopy.

The Fire Research Grants Program will provide funding for innovative ideas in the fire research area generated by the proposal writer, who chooses the topic and approach, consistent with the program description and objectives of this notice.

SUPPLEMENTARY INFORMATION:

Precision Measurement Grants Program

Dates: Applicants for the Precision Measurement Grants Program must submit an abbreviated proposal for preliminary screening. Based on the merit of the abbreviated proposal, applicants will be advised whether a full proposal should be submitted. The abbreviated proposals must be received at the address listed below no later than the close of business February 1, 2002. Proposals received after this deadline will be returned with no further consideration. The finalists will be notified of their status by March 22, 2002, and will be requested to submit full proposals to NIST by close of business on May 10, 2002. NIST expects to issue awards on or before September 30, 2002.

Addresses: For the Precision Measurement Grants Program, applicants are requested to direct technical questions and submit an abbreviated proposal (original and two (2) signed copies), with a description of their proposed work of no more than five (5) double spaced pages to: Dr. Peter J. Mohr, Manager, NIST Precision Measurement Grants Program, National Institute of Standards and Technology, Bldg. 225, Rm. B161, 100 Bureau Drive, Stop 8401, Gaithersburg, MD 20899–8401, Tel: (301) 975–3217, E-mail: *mohr@nist.gov*, Web site: *http://physics.nist.gov/pmg.*

Although applicants are not required to submit more than three copies of the proposal, the normal review process for the Precision Measurement Grants Program utilizes ten (10) copies. Applicants are encouraged to submit sufficient proposal copies for the full review process if they wish all reviewers to receive color, unusually sized (not 8.5″ x 11″), or otherwise unusual materials submitted as part of the proposal. Only three copies of the Federally required forms are needed.

Authority: The authority for the Precision Measurement Grants Program

is as follows: As authorized by 15 U.S.C. 272(b) and (c), NIST conducts directly, and supports through grants and cooperative agreements, a basic and applied research program in the general area of fundamental measurement and the determination of fundamental constants of nature.

Program Description and Objectives: The program description and objectives for the Precision Measurement Grants Program are as follows: As part of its research program, since 1970 NIST has awarded Precision Measurement Grants to U.S. universities and colleges so that faculty may conduct significant, primarily experimental research in the field of fundamental measurement or the determination of fundamental constants. NIST sponsors these grants and cooperative agreements primarily to encourage basic, measurement-related research in U.S. universities and colleges and to foster contacts between NIST scientists and those faculty members of U.S. academic institutions who are actively engaged in such work. The Precision Measurement Grants are also intended to make it possible for researchers to pursue new, fundamental measurement ideas for which other sources of support may be difficult to find. There is some latitude in research topics that will be considered under the Precision Measurement Grants Program. The key requirement is that the proposed project support NIST's ongoing work in the field of basic measurement science, which includes:

1. Experimental and theoretical studies of fundamental physical phenomena which test the basic laws of physics or which may lead to new or improved fundamental measurement methods and standards.

2. The determination of important fundamental physical constants.

Although proposals for either experimental or theoretical research will be considered, the former will be given preference because of the more immediate applicability of experimental work to metrology. Proposals from workers at the assistant and associate professor level who have some record of accomplishment are especially encouraged in view of the comparative difficulty researchers have in obtaining funds at the early stages of their careers.

Typical projects which have been funded through the NIST Prevision Measurement Grants Program include:

(1) Development of an atom interferometer gyroscope for tests for general relativity, M. Kasevich, Stanford University.

(2) Spectroscopy of francium: Towards a precise parity nonconservation measurement in a laser trap, Luis A. Orozco, State University of New York at Stony Brook.

(3) Measurement of Newton's constant G using a new method, J.H. Gundlach, University of Washington.

(4) Measurement of the polarization of the cosmic microwave background, S.T. Staggs, Princeton University.

(5) Combining the quantum Hall and AC Josephson effects for electric current metrology, E.A. Gwinn, University of California, Santa Barbara.

(6) A test of CPT symmetry using a new K–^{3}He self-compensating magnetometer, M.V. Romalis, University of Washington.

Eligibility: Eligible applicants are institutions of higher education, other non-profits, commercial organizations, international organizations, state, local and Indian tribal governments and Federal agencies with appropriate legal authority. Applications from non-Federal and Federal applicants will be competed against each other. Proposals selected for funding from non-Federal applicants will be funded through a project grant or cooperative agreement under the terms of this notice. Proposals selected for funding from non-NIST Federal agencies will be funded through an interagency transfer. Please Note: Before non-NIST Federal applicants may be funded, they must demonstrate that they have legal authority to receive funds from another federal agency in excess of their appropriation. As this announcement is not proposing to procure goods or services from applicants, the Economy Act (31 U.S.C. 1535) is not an appropriate legal basis.

Funding Availability: For the Precision Measurement Grants Program, the annual budget is approximately $300,000. Two new grants in the amount of $50,000 per year will be awarded; the remaining $200,000 will fund continuing grants. Applicants must propose multi-year projects, not to exceed three (3) years. The scope of work must be clearly severable into annual increments of meaningful work that represent solid accomplishments in case continued funding is not made available to the applicant.

Proposal Review Process: For the Precision Measurement Grants Program, to simplify the proposal writing and evaluation process, the following section procedure will be used: Applicants will initially submit abbreviated proposals, containing a description of the proposed project, including sufficient information to address the evaluation criteria, with a total length of no more than five (5) double spaced pages, to the mailing address given above in the **ADDRESSES** section. These proposals will be screened to determine whether they address the requirements outlined in this notice. Proposals that do not meet those requirements will not be considered further. Eight independent, objective individuals, at least half of whom are NIST employees, and who are knowledgeable about the scientific areas that the program addresses will conduct a technical review of each proposal, based on the evaluation criteria described in the Evaluation Criteria section for this program. The proposals will then be ranked based on the average of the reviewers' rankings. If non-Federal reviewers are used, the reviewers may discuss the proposals with each other, but ranks will be determined on an individual basis, not a consensus.

The program's selecting official will then select approximately four to eight finalists. In selecting finalists, the program's selecting official will take into consideration the results of the reviewers' evaluations, including rank, and relevance to the program objectives described above.

Finalists will then be asked to submit full proposals containing a description of the proposed project, including sufficient information to address the evaluation criteria, with a total length of no more than ten (10) double spaced pages in addition to the federally mandated forms and certifications, to the mailing address given above in the **ADDRESSES** section. The same independent reviewers will then evaluate the detailed proposals based on the same evaluation criteria, and the proposals will be ranked as previously described. In selecting proposals that will be recommended for funding, the program's selecting official will take into consideration the results of the reviewers' evaluations, including rank, and relevance to the program objectives described in the Program Description and Objectives section for this program.

Two proposals will be selected for funding by the end of fiscal year 2002. The final approval of selected applications and award of grants or cooperative agreements will be made by the NIST Grants Officer based on compliance with applicant requirements as published in this notice, compliance with applicable legal and regulatory requirements, and whether the recommended applicants appear to be responsible.

Applicants may be asked to modify objectives, work plans, or budgets and provide supplemental information required by the agency prior to award.

The decision of the Grants Officer is final.

Evaluation Criteria: The evaluation criteria to be used in evaluating the abbreviated application proposals and full proposals are:

1. The importance of the proposed research—Does it have the potential of answering some currently pressing question or of opening up a whole new area of activity?

2. The relationship of the proposed research to NIST's ongoing work—Will it support one of NIST's current efforts to develop a new or improved fundamental measurement method or physical standard, test the basis laws of physics, or provide an improved value for fundamental constant?

3. The feasibility of the research and the potential impact of the grant—Is it likely that significant progress can be made in a three year time period with the funds and personnel available and that the funding will enable work that would otherwise not be done with existing or potential funding?

4. The qualifications of the applicant—Does the educational and employment background and the quality of the research, based on recent publications, of the applicant indicate that there is a high probability that the proposed research will be carried out successfully?

Each of these factors in given equal weight in the evaluation process.

Award Period: For the Precision Measurement Grants Program, NIST is now accepting applications for two grants in the amount of $50,000 per year to be awarded for the initial period of September 30, 2002 through September 29, 2003. Each award may be continued for up to two additional years; however, future or continued funding will be at the discretion of NIST based on satisfactory performance, continuing relevance to program objectives, and availability of funds.

Matching Requirements: The Precision Measurement Grants Program does not require any matching funds.

Application Kit: For the Precision Measurement Grants Program, an application kit, containing all required applications forms and certifications will be provided to the finalists by Ms. Bonnie Whipp, (301) 975–4750.

EEEL, MEL, CSTL, PL, MSEL, BFRL, and ITL SURF Programs

Dates: The EEEL, MEL, CSTL, PL, MSEL, BRFL, and ITL SURF Programs proposals must be received no later than the close of business February 15, 2002.

Addresses: For the PL, MSEL, MEL, ITL, BFRL, EEEL, and CSTL SURF Programs, applicant institutions must submit one signed original and two (2) copies of the proposal to: Attn.: Ms. Anita Sweigert, National Institute of Standards and Technology, 100 Bureau Drive, Stop 8400, Gaithersburg, MD 20899–8400, Tel: (301) 975–4200, e-mail: *anita.sweigert@nist.gov,* Web site: *http://www.surf.nist.gov.*

Technical questions for the EEEL, MEL, CSTL, PL, MSEL, BFRL, and ITL SURF Programs should be directed to the following contact persons: for the EEEL SURF Program, Dr. David Newell, Tel: (301) 975–4228, e-mail: *david.newell@nist.gov;* for the MEL SURF Program, Ms. Lisa Jean Fronczek, Tel: (301) 975–6633, e-mail: *lfronczek@nist.gov;* for the CSTL SURF Program, Michael S. Epstein, Tel: (301) 975–8306, e-mail: *michael.epstein@nist.gov;* for the PL SURF Program, Dr. Marc Desrosiers, Tel: (301) 975–5639; e-mail: *marc.desrosiers@nist.gov;* for the MSEL SURF Program, Dr. Terrell A. Vanderah, Tel: (301) 975–5785, e-mail: *terrell.vanderah@nist.gov;* for the BFRL SURF Program, Dr. Chris White, Tel: (301) 975–6016 e-mail: *cwhite@nist.gov,* or Dr. Clarissa Ferraris, Tel: (301) 975–6711, e-mail: *clarissa@nist.gov;* and for the ITL SURF Program, Dr. Larry Reeker, Tel: (301) 975–5147, e-mail: *larry.reeker@nist.gov.*

Authority: The authority for the EEEL, MEL, CSTL, PL, MSEL, BFRL and ITL SURF Programs is as follows: 15 U.S.C. 278g–1 authorizes NIST to fund financial assistance awards to students at institutions of higher learning within the United States. These students must show promise as present or future contributors to the missions of NIST. Cooperative agreements are awarded to assure continued growth and progress of science and engineering in the United States, including the encouragement of women and minority students to continue their professional development.

Program Description and Objectives: The program description and objectives for the EEEL, MEL, CSTL, PL, MSEL, BFRL, and ITL SURF Programs are as follows: To build a mutually beneficial relationship between the student, the institution of higher learning, and NIST. This is the tenth year of the PL SURF Program, partially funded by the NSF Physics Division as a Research Experience for Undergraduates (REU) site. This is the fifth year of the MSEL SURF Program funded by the NSF Division of Materials Research (DMR) as a REU site. This is the fourth year of the MEL SURF Program and the second year of the BFRL SURF Program, both funded by the NSF Division of Engineering Education and Centers (EEC) as REU sites. This is the second year of the ITL SURF Program funded by the NSF Division of Experimental and Integrative Activities in the Directorate for Computer and Information Science and Engineering (CISE) as a REU site.

NIST is one of the nation's premiere research institutions for the physical and engineering sciences and, as the lead Federal agency for technology transfer, it provides a strong interface between government, industry and academia. NIST embodies a special science culture, developed from a large and well-equipped research staff that enthusiastically blends programs that address the immediate needs of industry with longer-term research that anticipates future needs. This occurs in few other places and enables the Electronics and Electrical Engineering Laboratory, Physics Laboratory, Materials Science and Engineering Laboratory, Building and Fire Laboratory, and Information Technology Laboratory to offer unique research and training opportunities for undergraduates, providing them a research-rich environment and exposure to state of the art equipment.

NIST's EEEL strives to be the world's best source of fundamental and industrial-reference measurement methods and physical standards for electrotechnology. To be a world-class resource for semiconductor measurements, data, models, and standards focused on enhancing U.S. technological competitiveness in the world market, research is conducted in semiconductor materials, processing, devices, and integrated circuits to provide, through both experimental and theoretical work, the necessary basis for understanding measurement-related requirements in semiconductor technology. To provide the world's most technically advanced and fundamentally sound basis for all electrical measurements in the United States, the EEEL's research projects include maintaining and disseminating the national electrical standards, developing the measurement methods and services needed to support electrical materials, components, instruments, and systems used for the generation, transmission, and application of conducted electrical power, and related activities in support of the electronics industry including research on video technology and electronic product data exchange.

NIST's MEL conducts theoretical and experimental research in length, mass, force, vibration, acoustics, and ultrasonics, as well as intelligent machines, precision control of machine tools, information technology for the integration of all elements of a product's life cycle. Much of this applied research

is devoted to overcoming barriers to the next technological revolution, in which manufacturing facilities are spread across the globe. MEL's research and development leads to standards, test methods and data that are crucial to industry's success in exploiting advanced manufacturing technology. Critical components of manufacturing at any level are measurement and measurement-related standards, not just of products, but increasingly of information about products and processes. Thus, MEL programs enhance both physical and information-based measurements and standards. Research projects can be theoretical or experimental, and will range in focus from intelligent machine control, characterizing a manufacturing process or improving product data exchange, to the accurate measurement of an artifact's dimensions.

NIST's CSTL strives to be a world-class research laboratory that is recognized by the Nation as the primary source for the chemical, biochemical, and chemical engineering measurements, data, models, and reference standards that are required to enhance U.S. industrial competitiveness in the world market. CSTL is the primary reference laboratory for chemical measurements, entrusted with developing, maintaining, advancing, and enabling the chemical measurement system for the United States of America, thereby enhancing industry's productivity and competitiveness, establishing comparability of measurements to facilitate equity of global trade, and improving public health, safety, and environmental quality. CSTL's activities include: Chemical Characterization of Materials, Process Metrology, Chemical and Biochemical Sensing, Nanotechnology, Healthcare Measurements, Environmental Measurements, Microelectronics, Physical Property Data, Chemical and Biochemical Data, Bio-Molecules and Materials, DNA Technologies, and International Measurement Standards.

Attending to the long-term needs of many U.S. high-technology industries, NIST's Physics Laboratory conducts basic research in the areas of quantum, electron, optical, atomic, molecular, and radiation physics. To achieve these goals, PL staff develop and utilize highly specialized equipment, such as polarized electron microscopes, scanning tunneling microscopes, lasers, and x-ray and synchrotron radiation sources. Research projects can be theoretical or experimental and will range in focus from computer modeling of fundamental processes through trapping atoms and choreographing molecular collisions, to standards for radiation therapy.

NIST's MSEL conducts basic research in the electronic, magnetic, optical, superconducting, mechanical, thermal, chemical, and structural properties of metals, ceramics, polymers, and composites. Much of this applied research is devoted to overcoming barriers to the next technological revolution, in which individual atoms and molecules will serve as the fundamental building blocks of devices. Preparation of unique materials by atomic level tailoring of multi-layers, perfect single crystals, and nanocomposites are just some of the future technologies being developed and explored in NIST's MSEL. To achieve these goals, staff develop and utilize highly specialized equipment, such as high resolution electron microscopes, atomic force microscopes, neutron scattering instruments, x-ray diffraction sources, lasers, magnetometers, plasma furnaces, melt spinners, molecular beam epitaxy systems, and thermal spray systems. Research projects can be theoretical or experimental and will range in focus from the structural, chemical, and morphological characterization of advanced materials made in the NIST laboratories to the accurate measurement of the unique properties possessed by these special materials.

NIST's BFRL provides technical leadership and participants in developing the measurement and standards infrastructure related to materials critical to U.S. industry, academia, government, and the public. Building and Fire Research programs at NIST cover a full range of materials issues from design to processing to performance. Separate research initiatives address concrete, coating, earthquake resistance of structures, fire science and engineering, the theory and modeling of materials, and materials reliability. Through laboratory-organized consortia and one-on-one collaborations, BFRL's scientists and engineers work closely with industrial researchers, manufacturers of high-technology products, and the major users of advanced materials.

NIST's ITL responds to industry and user needs for objective, neutral tests for information technology. These are enabling tools that help companies produce the next generation of products and services, and that help industries and individuals use these complex products and services. ITL works with industry, research and government organizations to develop and demonstrate tests, test methods, reference data, proof of concept implementations and other infrastrutural technologies. Program activities include: high performance computing and communications systems; emerging network technologies; access to, exchange, and retrieval of complex information; computational and statistical methods; information security; and testing tools and methods to improve the quality of software.

SURF students will have the opportunity to work one-on-one with our nation's top scientists and engineers. It is anticipated that successful SURF students will move from a position of reliance on guidance from their research advisors to one of research independence during the twelve-week period. One goal of this partnership is to provide opportunities for our nation's next generation of scientists and engineers to engage in world-class scientific research at NIST, especially in ground-breaking areas of emerging technologies. This carriers with it the hope of motivating individuals to pursue a Ph.D. in physics, chemistry, materials science, engineering, mathematics, or computer science, and to consider research careers. SURFing the Electronics and Electrical Engineering Laboratory, SURFing the Manufacturing Engineering Laboratory, SURFing the Chemical Science and Technology Laboratory, SURFing the Physics Laboratory, SURFing the Materials Science and Engineering Laboratory, SURFing the Building and Fire Research Laboratory, and SURFing the Information Technology Laboratory will help to forge partnerships with NSF and with post-secondary institutions that demonstrate strong, hands-on undergraduate science curricula especially those with a demonstrated commitment to the education of women, minorities, and students with disabilities.

Eligibility: The EEEL, MEL, CSTL, PL, MSEL, BFRL, and ITL, SURF Programs are open to colleges and universities in the United States and it territories with degree granting programs in materials science, chemistry, engineering, computer science, mathematics, or physics. Participating students must be U.S. citizens or permanent U.S. residents.

Funding Availability: For the EEEL SURF Program, the NIST EEEL anticipates receiving funding as a NSF REU Program at the level of $50,000 per year. For the MEL SURF Program, the NIST MEL anticipates receiving funding as a NSF REU Program at the level of $52,000 per year. For the CSTL SURF

Program, the NIST CSTL will commit approximately $50,000 to support these cooperative agreements and will pursue funding as a NSF REU Program at the level of $50,000 per year.

For the PL SURF Program, the NIST PL will commit approximately $50,000 to support these cooperative agreements. The NIST PL's REU Program is anticipating renewal of funding by the NSF at the level of $85,000 per year. The anticipated direct costs for subsidence, travel, lodging, and conference attendance for twenty-two students is about $135,000.

For the MSEL SURF Program, the NIST MSEL anticipates receiving funding as a NSF REU Program at the level of $70,000 per year. It is anticipated that this funding will provide for the costs of subsistence, travel and lodging, and the conference attendance of ten students.

For the BFRL SURF Program, the NIST BFRL anticipates receiving funding as a NSF REU Program at the level of $50,000 per year. For the ITL SURF Program, the NIST ITL anticipates receiving second year funding as a NSF REU Program at the level of $50,000 per year. It is anticipated that the funding for the EEEL, MEL, CSTL, BFRL, and ITL SURF Programs will provide for the costs of subsistence, travel and lodging, and the conference attendance of eight students for each program.

The actual number of awards made under this announcement will depend on the actual costs. For all SURF Programs described in this notice, it is expected that individual awards to institutions will range from approximately $3,000 to $70,000. NIST is negotiating with NSF to determine whether NIST may contract directly with apartment complexes for student housing, or whether funding for student housing will be included in cooperative agreements awarded as a result of this notice. Selected applicants will be informed prior to award whether housing will be provided via the cooperative agreement or provided separately by NIST.

Proposal Review Process: The EEEL, MEL, CSTL, PL, MSEL, BFRL, and ITL SURF Programs conduct an initial screening of all proposals received by the deadline for substantially incomplete or non-responsive applications, which will not be considered for funding. All substantially complete proposals will be reviewed and ranked by a panel of three NIST scientists appointed by the Program Directors on the basis of the evaluation criteria. Proposals should include the following:

(A) Student Information:

(1) Student application information cover sheet;

(2) Official transcript for each student nominated for participation (students must have a recommended G.P.A. of 3.0 or better, out of a possible 4.0);

(3) A personal statement from each student and statement of commitment to participate in the 2002 SURF program, including a description of the student's prioritized research interests;

(4) A resume for each student; and

(5) Two letters of recommendation for each student.

(B) Information About the Applicant Institution:

(1) Description of the institution's education and research philosophy, faculty interests, on-campus research program(s) and opportunities, and overlapping research interests of NIST and the institution; and

(2) A statement addressing issues of academic credit and cost sharing.

In recommending applications for funding, the program's selecting official will take into consideration the results of the panel's evaluations, including rank, the program objectives of the NIST laboratories as described above, and the relevance to the goals of the SURF Program. The final approval of selected applications and award of cooperative agreements will be made by the NIST Grants Officer based on compliance with application requirements as published in this notice, compliance with applicable legal and regulatory requirements, and whether the recommended applicants appear to be responsible. Applicants may be asked to modify objectives, work plans, or budgets and provide supplemental information required by the agency prior to award. The decision of the Grants Officer is final.

Evaluation Criteria: for the EEEL, MEL, CSTL, PL, MSEL, BFRL, and ITL SURF Programs, the evaluation criteria are:

Evaluation of Student's Academic Ability and Commitment to Program Goals (70%): Includes, but is not limited to, evaluation of the following: completed course work; expressed research interest; prior research experience; grade point average in courses relevant to program; career plans; honors and activities.

Evaluation of Applicant Institution's Commitment to Program Goals (30%): Includes, but is not limited to, evaluation of the following: institution's focus on AMO physics, chemistry, materials science, manufacturing research and all of its components, including but not limited to engineering, computer science, physics, electrical engineering, and mathematics; overlap between research interests of the institution and NIST; emphasis on undergraduate hands-on research; undergraduate participation in research conferences/programs; on-campus research facilities; past participation by students/institution in such programs; and commitment to educate women, minorities, and persons with disabilities.

Award Period: For the EEEL, MEL, CSTL, PL, MSEL, BFRL, and ITL SURF Programs, these programs are anticipated to run between May 28 through August 16, 2002; adjustments may be made to accommodate specific academic schedules (e.g., a limited number of 9-week cooperative agreements).

Matching Requirements: The EEEL, MEL, PL, MSEL, BFRL, and ITL SURF Programs encourage, but do not require, cost sharing. In the spirit of a true partnership, successful applicant institutions will be encouraged to contribute some partial support to the program. A suggested level of participation would be direct coverage of (partially or entirely) student travel (one round trip common carrier) or lodging costs (approximately $2,200); total coverage of indirect costs and/or fringe benefits (NIST will authorize funds for indirect costs or fringe benefits); a stated intent to support the participating student(s) at a research conference; and/or award of academic credit for the student research. The level of cost sharing will not be considered in the award decision. Less than ten percent of the associated student subsistence, travel and lodging has been provided in cost sharing by the participating institutions in previous years.

Application Kit: for EEEL, MEL, CSTL, PL, MSEL, BFRL, and ITL SURF Programs, an application kit, containing all required forms and certifications, may be obtained by contacting Ms. Anita Sweigert, (301) 975–4200; websites for each program's application kit may b4 accessed through the following website: http://www.surf.nist.gov.

Electronics and Electrical Engineering (EEEL) Grants Program

Dates: The Electronics and Electrical Engineering Grants Program proposals must be received no later than the close of business September 30, 2002. Proposals received after June 30, 2002 will continue to be processed and considered for funding but may be funded in the next fiscal year, subject to the availability of funds.

Addresses: For the Electronics and Electrical Engineering Grants Program, submit one signed original and two copies of the proposal package to: Electronics and Electrical Engineering Laboratory, Attn.: D.J. Hamilton,

National Institute of Standards and Technology, 100 Bureau Drive, Stop 8100, Gaithersburg, MD 20899–8100, Tel.: (301) 975–2227, Fax: (301) 975–4091.

Authority: As authorized by 15 U.S.C. 272(b) and (c), the NIST Electronics and Electrical Engineering Laboratory conducts a basic and applied research program directly and through grants and cooperative agreements to eligible recipients.

Program Description and Objectives: The Electronics and Electrical Engineering Grants Program solicits proposals in support of the broad program objectives identified below.

The Electronics and Electrical Engineering Grants Program supports the formal mission of the associated Laboratory: The Electronics and Electrical Engineering Laboratory promotes U.S. Economic growth by providing measurement capability of high impact focused primarily on the critical needs of the U.S. electronics and electrical industries, and their customers and suppliers.

More specifically, the Electronics and Electrical Engineering Grants Program solicits proposals to support specific programs in the areas of metrology for semiconductors (including mainstream silicon, power devices, and compound semiconductors), superconductors (including cryoelectronics and bulk superconductors), electronic instrumentation, radio-frequency technology (including microwave and millimeter-wave, antennas, and electromagnetic compatibility/interference), optoelectronics, magnetics (including bulk magnetic materials and magnetic data storage), video (including flat-panel displays), electronic commerce as applied to electronic products and devices, the transmission and distribution of electrical power, national electrical standards (fundamental, generally quantum-based physical standards), and law enforcement (clothing, communication systems, emergency equipment, investigative aids, protective equipment, security systems, vehicles, speed-measuring equipment, weapons, and analytical techniques and standard reference materials used by the public safety community).

For details on these various activities, please see the Electronics and Electrical Engineering Laboratory Web site at *http://www.eeel.nist.gov.* Note that documents describing the current programs for the five technical divisions and two offices are available through the home page.

Technical contacts for these areas are:

Semiconductors

Semiconductor Electronics Division—Division Chief: Dr. David G. Seiler; (301) 975–2054; *david.seiler@nist.gov*

Office of Microelectronics Programs—Director: Dr. Stephen Knight; (301) 975–4400; *stephen.knight@nist.gov*

Superconductors (bulk); Magnetics

Laboratory Acting Deputy Director: Dr. Alan H. Cookson; (301) 975–2220; *alan.cookson@nist.gov*

Supercondutors (cryoelectronics); National electrical standards (Josephson array development)

Electromagnetic Technology Division—Division Chief: Dr. Richard E. Harris; (303) 497–3678; *richard.harris@boulder.nist.gov*

Electronic instrumentation; Video; Electronic commerce; National electrical standards (other than Josephson array development)

Electricity Division—Division Chief: Dr. Bruce F. Field; (301) 975–2400; *bruce.field@nist.gov*

Radio-frequency technology

Radio-Frequency Technology Division—Division Chief: Dr. Dennis S. Friday; (303) 497–3132; Friday@boulder.nist.gov

Optoelectronics

Optoelectronics Division: Office of Optoelectronics Programs—Division Chief and Office Director: Dr. Gordon W. Day; (303) 497–5432; *gwday@boulder.nist.gov*

Law Enforcement

Office of Law Enforcement Standards—Director: Dr. Kathleen Higgins; (301) 975–2757; *kathleen.higgins@nist.gov*

Eligibility: The Electronics and Electrical Engineering Grants Program is open to institutions of higher education; hospitals; non-profit organizations; commercial organizations; state, local, and Indian tribal governments; foreign governments; organizations under the jurisdiction of foreign governments; and international organizations.

Funding Availability: Over the past three years, the Electronics and Electrical Engineering laboratory funded a total of approximately $1,000,000 in grants and cooperative agreements. The amount available each year fluctuates considerably based on programmatic needs. Individual awards are expected to range between $5,000 and $150,000.

Proposal Review Process: For the Electronics and Electrical Engineering Grants Program, proposals will be distributed to the appropriate Division Chief or Office Director based on technical area by one or more technical professionals familiar with the programs of the Electronics and Electrical Engineering Laboratory. The Divisions and Offices will score proposals based on the evaluation criteria described in the Evaluation Criteria section below.

Reviews will be conducted on a monthly basis during the first quarter, and quarterly thereafter, and all proposals received during the month or quarter will be ranked based on the reviewers' scores. Based on the reviewers' scores, recommendations of the division Chiefs and Office Directors, the availability of funding, and relevance to the objectives of the Electronics and Electrical Engineering Grants Program, as described above, the Laboratory Director will provide recommendations for funding to the NIST Grants Officer. The final approval of selected applications and award of financial assistance will be made by the NIST Grants Officer based on compliance with application requirements as published in this notice, compliance with applicable legal and regulatory requirements, and whether the recommended applicants appear to be responsible. Applicants may be asked to modify objectives, work plans, or budgets and provide supplemental information required by the agency prior to award. The decision of the Grants Officer is final. Applicants should allow up to 90 days processing time.

Evaluation Criteria: The Divisions and Offices will score proposals based on the following criteria and weights:

Proposal addresses specific program objectives as described in this notice (25%)
Proposal provides evidence of applicant's expertise in relevant technical area (20%)
Proposal offers innovative approach (20%)
Proposal provides adequate rationale for budget (15%)

Award Period: For the Electronics and Electrical Engineering Grants Program, proposals will be considered for research projects from one to three years. When a proposal for a multi-year award is approved, funding will generally be provided for only the first year of the program. If an application is selected for funding, NIST has no obligation to provide any additional funding in connection with that award. Continuation of an award to increase funding or extend the period of performance is at the total discretion of NIST. Funding for each subsequent year of a multi-year proposal will be contingent upon satisfactory progress, continued relevance to the mission of the Electronics and Electrical Engineering Grants Program, and the availability

of funds. The multi-year awards must have scopes of work that can be easily separated into annual increments of meaningful work the represent solid accomplishments if prospective funding is not made available to the applicant, (i.e., the scopes of work for each funding period must produce identifiable and meaningful results in and of themselves).

Matching Requirements: The Electronics and Electrical Engineering Grants Program does not require any matching funds.

Application Kit: An application kit, containing all required application forms and certifications is available by contacting: D.J. Hamilton, (301) 975–2227.

Manufacturing Engineering Laboratory (MEL) Grants Program

Dates: The MEL Grants Program proposals must be received no later than the close of business September 30, 2002. Proposals received after June 30, 2002 will continue to be processed and considered for funding but may be funded in the next fiscal year, subject to the availability of funds. Each applicant must submit one signed original and two copies of each proposal along with a Grant Application, (Standard Form 424 REV. 7/97 and other required forms).

Addresses: For the MEL Grants Program, submit one signed original and two copies of the proposal, clearly marked to identify the field of research, to: Manufacturing Engineering Laboratory, Attn: Mrs. Barbara Horner, National Institute of Standards and Technology, 100 Bureau Drive, Stop 8200, Building 220, Room B322, Gaithersburg, Maryland 20899–8200, Tel: (301) 975–4345, E-mail: *barbara.horner@nist.gov*.

Authority: As authorized under 15 U.S.C. 272(b) and (c), the MEL conducts a basic and applied research program directly and through grants and cooperative agreements to eligible recipients.

Program Description and Objectives: All proposals submitted must be in accordance with the program objectives listed below. The appropriate Program Manager for each field of research may be contacted for clarification of the program objectives.

I. Precision Engineering Division, 821—The primary objective is to support laboratory programs in the areas of Engineering Metrology, Large-Scale Metrology, Nanometer-Scale Metrology, and Surface Metrology. The contact person for this division is: Dr. Dennis Swyt, and he may be reached at (301) 975–3463; *dennis.swyt@nist.gov.*

II. Manufacturing Metrology Division, 822—The primary objective is to support laboratory programs in Mechanical Metrology; Advanced Optics Metrology; Predictive Process Engineering; and Metrology and Smart Sensor Systems for Manufacturing Equipment. The contact person for this division is: Dr. E. Clayton Teague, and he may be reached at (301) 975–6600; *clayton.teague@nist.gov.*

III. Intelligent Systems Division, 823—The primary objective is to support laboratory programs in Intelligent Open Architecture Control of Manufacturing Systems, Intelligent Controls of Mobility Systems, and Intelligent Systems. The contract person for this division is: Dr. John M. Evans, and he may be reached at (301) 975–3418; *j.evans@nist.gov.*

IV. Manufacturing Systems Integration Division, 826—The primary objective is to pursue semantics- and ontology-based systems integration technology and standards through support of laboratory programs in Manufacturing Enterprise Integration; Manufacturing Simulation and Visualization; Product Engineering; and Meso-Micro-Nano-Manufacturing. The contact person for this division is: Dr. Steven R. Ray, and he may be reached at (301) 975–3508; *steven.ray@nist.gov.*

Eligibility: The MEL Grants Program is be open to institutions of higher education; hospitals; non-profit organizations; commercial organizations; state, local, and Indian tribal governments; foreign governments; organizations under the jurisdiction of foreign governments; and international organizations.

Funding Availability: In fiscal year 2002, the Mel Grants Program anticipates funding of approximately $750,000, including new awards and continuing projects. Individual awards are expected to range from approximately $25,000 to $300,000.

Proposal Review Process: Responsive proposals will be reviewed in a two-step process. First, at least three independent, objective individuals knowledgeable about the particular scientific area described in the section above that the proposal addresses will conduct a technical review of proposals, based on the evaluation criteria described below. Reviews will be conducted no less than once per quarter, and all proposals since the last review session will be ranked based on the reviewers' scores. Second, the Division Chief or Laboratory Director will make application selections. In making application selections, the Division Chief or Laboratory Director will take into consideration the results of the reviewers' evaluations, the compatibility of the applicant's proposal with the program objectives of the particular division that the proposal addresses, the availability of funds, and relevance to the objectives of the MEL Grants Program. These objectives are described above in the Program Objectives. The final approval of selected applications and award of financial assistance will be made by the NIST Grants Officer based on compliance with application requirements as published in this notice, compliance with applicable legal and regulatory requirements, and whether the recommended applicants appear to be responsible, Applicants may be asked to modify objectives, work plans, or budgets and provide supplemental information required by the agency prior to award. The decision of the Grants Officer is final.

Evaluation Criteria: For the MEL Grants Program, the evaluation criteria the technical reviewers will use in evaluating the proposals are as follows:

1. *Rationality.* Reviewers will consider the coherence of the applicant's approach and the extent to which the proposal effectively addresses scientific and technical issues.

2. *Technical Merit of Contribution.* Reviewers will consider the potential technical effectiveness of the proposal and the value it would contribute to the field of manufacturing engineering and metrology research.

3. *Qualifications of Technical Personnel.* Reviewers will consider the professional accomplishments, skills, and training of the proposed personnel to perform the work in the project.

4. *Resources Availability.* Reviewers will consider the extent to which the proposer has access to the necessary NIST or other facilities and overall to accomplish project objectives.

Each of these factors will be given equal weight in the evaluation process.

Award Period: For the MEL Grants Program, proposals will be considered for research projects from one to three years. When a proposal for a multi-year award is approved, funding will generally be provided for only the first year of the program. If an application is selected for funding, NIST has no obligation to provide any additional funding in connection with that award. Continuation of an award to increase funding or extend the period of performance is at the total discretion of NIST. Funding for each subsequent year of a multi-year proposal will be contingent upon satisfactory progress, continued relevance to the mission of the MEL program, and the availability of fundings. The multi-year awards must

have scopes of work that can be easily separated into annual increments of meaningful work that represent solid accomplishments if prospective funding is not made available to the applicant, (i.e., the scopes of work for each funding period must produce identifiable and meaningful results in and of themselves).

Matching Requirements: The MEL Grants Program does not require any matching funds.

Application Kit: An application kit, containing all required application forms and certifications is available by electronic mail to: Mrs. Barbara Horner, *barbara.horner@nist.gov.* Alternatively, Mrs. Horner can be contacted at (301) 975–4345.

Chemical Science and Technology Laboratory Grants Program

Dates: The Chemical Science and Technology Laboratory Grants Program proposals must be received no later than the close of business September 30, 2002. Proposals received after June 30, 2002 will continue to be processed and considered for funding but may be funded in the next fiscal year, subject to the availability of funds.

Addresses: For the Chemical Science and Technology Laboratory Grant Program applicants are requested to submit one signed original and two copies of the proposal clearly marked to identify the field of research to: Attn. Dr. William F. Koch, National Institute of Standards and Technology, 100 Bureau Drive, Stop 8300, Gaithersburg, MD. 20899–8300, Tel (301) 975–8301, E-Mail: *william.koch@nist.gov*.

Authority: As authorized under 15 U.S.C. 272 (b) and (c), the Chemical Science and Technology Laboratory conducts a basic and applied research program directly and through grants and cooperative agreements to eligible recipients.

Program Description and Objectives: All proposals submitted to the Chemical Science and Technology Laboratory Grants Program must be in accordance with the program objectives listed below. The appropriate Program Manager for each field of research may be contacted for clarification of the program objectives.

I. Biotechnology Division, 831—The primary objective is to advance the commercialization of biotechnology by developing the scientific/engineering technical base, reliable measurements, standards, data and models to enable U.S. industry to quickly and economically produce biochemical products with appropriate quality control. The contact person for this division is: Dr. Gary L. Gilliland, and he may be reached at (301) 975–2629.

II. Process Measurements Division, 836—The primary objective is to develop and provide measurement standards and services, measurement techniques, recommended practices, sensing technology, instrumentation, and mathematical models required for analysis, control, and optimization of industrial processes. The Division's research seeks fundamental understanding of, and generates key data pertinent to, chemical process technology. These efforts include the development and validation of data-predictive computational tools and correlation's, computer simulations of processing operations, and provision of requisite chemical, physical, and engineering data. The contact person for this division is: Dr. James R. Whetstone, and he may be reached at (301) 975–2609.

III. Surface and Microanalysis Science Division, 837—The primary objective is to promote U.S. economic growth, safety, health, and environmental quality by working with industry, other government agencies, and standards organizations to develop and apply key technologies, measurements, and standard for spatially and temporally resolved chemical characterization. The contact person for this division is: Dr. Richard R. Cavanagh, and he may be reached at (301) 975–2368.

IV. Physical and Chemical Properties Division, 838—The primary objective is to be the Nation's reference laboratory for measurements, standards, data, and models for, the thermophysical and thermochemical properties of gases, liquids, and solids—both pure materials and mixtures. The rates and mechanisms of chemical reactions in the gas and liquid phases, fluid-based processes and systems, including separations, low-temperature refrigeration, and low-temperature heat transfer and flow. The contact person for this division is: Dr. Mickey Haynes, and he may be reached at (303) 497–3247.

V. Analytical Chemistry Division, 839—The primary objective is to serve as the Nation's reference laboratory for chemical measurements and standards to enhance U.S. industry's productivity and competitiveness, assure equity in trade, and provide quality assurance for chemical measures used for assessing and improving public health, safety, and environment. The contact person for this division is: Dr. Willie E. May, and he may be reached at (301) 975–3108.

Eligibility: The Chemical Science and Technology Laboratory Grants Program is open to institutions of higher education; hospitals; non-profit organizations; commercial organizations; state, local, and Indian trial governments; foreign governments; organizations under the jurisdiction of foreign governments; and international organizations.

Funding Availability: In fiscal year 2002, the Chemical Science and Technology Laboratory anticipates funding of approximately $1,000,000. Individual awards are expected to range from approximately $5,000 to $100,000.

No funds have been set aside specifically for support of the CSTL Grants Program. The availability of funds depends upon actual authorization of funds and other costs expected to be incurred by incurred by individual divisions within the laboratory. Where funds are identified as available for grants, those funds will be award to highly ranked proposals as determined by the process described in this notice.

Proposal Review Process: For the Chemical Science and Technology Laboratory Grants Program, proposals will be reviewed in two-step process. First, at least three independent, objective individuals knowledgeable about the particular scientific area described in the section above that the proposal addresses will conduct a technical review of each proposal, based on the evaluation criteria described below. Reviews will be conducted on a monthly basis, and all proposals received during the month will be ranked based on the reviewers' scores. Second, the Division Chief will make application selections. In making application selections, the Division Chief will take into consideration the results of the reviews' evaluations, the compatibility of the applicant's proposal with the program objectives of the particular division or center that the proposal addresses, the availability of funds, and relevance to the objectives of the Chemical Science and Technology Laboratory Grants Program. These objectives are described above in the ''Program Objectives'' section. The final approval of selected applications and award of financial assistance will be made by the NIST Grants Officer based on compliance with application requirements as published in this notice, compliance with applicable legal and regulatory requirements, and whether the recommended applicants appear to be responsible. Applicants may be asked to modify objectives, work plans, or budgets and provide supplemental information required by the agency prior to award. The decisions of the Grants Officer are final.

Evaluation Criteria: For the Chemical Science and Technology Laboratory Grants Program, the evaluation criteria the technical reviewers will use in evaluating the proposals are as follows:

1. *Rationality.* Reviewers will consider the coherence of the applicant's approach and the extent to which the proposal effectively addresses scientific and technical issues.

2. *Qualifications of Technical Personnel.* Reviewers will consider the professional accomplishments, skills,and training of the proposed personnel to perform the work in the project.

3. *Resources Availability.* Reviewers will consider the extent to which the proposer has access to the necessary NIST or other facilities and overall support to accomplish project objectives.

4. *Technical Merit of Contribution.* Reviewers will consider the potential technical effectiveness of the proposal and the value it would contribute to the field of Chemistry.

Each of these factors will be given equal weight in the evaluation process.

Award Period: For the Chemical Science and Technology Laboratory Grant Program, proposals will be considered for research projects from one to three years. When a proposal for a multi-year award is approved, funding will generally be provided for only the first year of the program. If an application is selected for funding, NIST has no obligation to provide any additional funding in connection with that award. Continuation of an award to increase funding or extend the period of performance is at the total discretion of NIST. Funding for each subsequent year of a multi-year proposal will be contingent upon satisfactory progress continued relevance to the mission of the Chemical Science and Technology Laboratory program, and the availability of funds. The multi-year awards must have scopes of work that can be easily separated into annual increments of meaningful work that represent solid accomplishments if prospective funding is not made available to the applicant, (i.e. the scopes of work for each funding period must produce identifiable and meaning results in and of themselves).

Matching Requirements: The Chemical Science and Technology Laboratory Grants Program does not require any matching funds.

Contact: For information on the Chemical Science and Technology Laboratory Grants Program, please contact Dr. William Koch, (301) 975–8301.

Application Kit: For the CSTL Grants Program, an application kit, containing all required application forms and certifications is available by contacting Mr. Neil Alderoty, (301) 975–8303.

Physics Laboratory Grants Program

Dates: The Physics Laboratory Grants Program proposals must be received no later than the close of business September 30, 2002. Proposals received after June 30, 2002 will continue to be processed and considered for funding but may be funded in the next fiscal year, subject to the availability of funds.

Addresses: For the Physics Laboratory Grant Program applicants are requested to submit one signed original and two copies of the proposal clearly marked to identify the field of research to: Attn.: Ms. Anita Sweigert, National Institute of Standards and Technology, 100 Bureau Drive, Stop 8400, Gaithersburg, MD 20899–8400, Tel (301) 975–4200, E-Mail: *anita.sweigert@nist.gov.*

Authority: As authorized under 15 U.S.C. 272(b) and (c), the Physics Laboratory conducts a basic and applied research program directly and through grants and cooperative agreements to eligible recipients.

Program Description and Objectives: All proposals submitted to the Physics Laboratory Grants Program must be in accordance with the program objectives listed below. The appropriate Program Manager for each field of research may be contacted for clarification of the program objectives.

1. Electron and Optical Physics Division, 841—The primary objective is to supplement division activities in characterization of nanometer-scale electronic and magnetic structures, characterization of EUV optical components to support semiconductor lithography and ultraviolet radiometric metrology. The contact person for this division is: Dr. Charles W. Clark and he may be reached at (301) 975–3709.

II. Atomic Division, 842—The primary objective is to support division programs aimed at determining basic atomic properties and developing new metrology techniques in atomic spectroscopy, quantum processes, plasma radiation, laser cooling and trapping and quantum metrology. The contact person for this division is: Dr. Wolfgang L. Wiese and he may be reached at (301) 975–3200.

III. Optical Technology Division, 844—The primary objective is to develop, improve and maintain national standards for radiation thermometry, spectroradiometry, photometry, and spectrophotometry as well as conduct basic theoretical and experimental research on the photophysical and photochemical properties of materials, in radiometric and spectroscopic technique's and instrumentation, and in the application of optical technologies. The contact person for this division is: Dr. Albert C. Parr and he may be reached at (301) 975–2316.

IV. Ionizing Radiation Division, 846—The primary objective is to provide primary standards and measurement methods and technology to support the Division's work in meeting national needs in radiation interactions and dosimetry, neutron interactions, dosimetry and radioactivity including both theoretical/experimental and applied research programs. The contact person for this division is: Dr. Bert M. Coursey and he may be reached at (301) 975–5584.

V. Time and Frequency Division, 847—The primary objective is to supplement division basic and applied research programs in area of phase noise measurements, network synchronization, ion storage, atomic standards and optical frequency measurements in support of future standards, dissemination services, and measurement methods. The contact person for this division is: Dr. Donald B. Sullivan and he may be reached at (303) 497–3772.

Eligibility: The Physics Laboratory Grants Program is open to institutions of higher education; hospitals; non-profit organizations; commercial organizations; state, local, and Indian tribal governments; foreign governments; organizations under the jurisdiction of foreign governments: and international organizations.

Funding availability: In fiscal year 2002, the Physics Laboratory anticipates funding of approximately $1,400,000, including new awards and continuing projects. Funding availability will be apportioned by quarter. Individual awards are expected to range from approximately $5,000 to $250,000.

Proposal Review Process: For the Physics Laboratory Grants Program, responsive proposals will be considered as follows: First, at least three independent, objective individuals knowledgeable about the particular scientific area described in the section above that the proposal addresses will conduct a technical review of each proposal, based on the evaluation criteria described below. Reviews will be conducted on a monthly basis, and all proposals received during the month will be ranked on the reviewers' scores. If non-Federal reviewers are used, reviewers may discuss the proposals with each other, but scores will be determined on an individual basis, not as a consensus.

Next, the Division Chief will make final application selections, taking into

consideration the results of the reviewers' evaluations, including rank; the compilation of a slate that, when taken as a whole, is likely to best further the program goals described above; and the availability of funds.

The final approval of selected applications and awards of financial assistance will be made by the NIST Grants Officer based on compliance with application requirements as published in this notice, compliance with applicable legal and regulatory requirements, and whether the recommended applicants appear to be responsible.

Applicants may be asked to modify objectives, work plans, or budgets and provide supplemental information required by the agency prior to award.

The decisions of the Grants Officer are final.

Evaluation Criteria: For the Physics Laboratory Grants Program, the evaluation criteria the technical reviewers will use in evaluating the proposals are as follows:

1. *Rationality:* Reviewers will consider the coherence of the applicants's approach and the extent to which the proposal effectively addresses scientific and technical issues.

2. *Qualifications of Technical Personnel.* Reviewers will consider the professional accomplishments, skills, and training of the proposed personnel to perform the work in the project.

3. *Resources Availability.* Reviewers will consider the extent to which the proposer has access to the necessary NIST or other facilities and overall support to accomplish, project objectives.

4. *Technical Merit of Contribution.* Reviewers will consider the potential technical effectiveness of the proposal and the value it would contribute to the field of physics.

Each of these factors will be given equal weight in the evaluation process.

Award Period: For the Physics Laboratory Grant Program, proposals will be considered for research projects from one to three years. When a proposal for a multi-year project is approved, funding will generally be provided for only the first year of the program. If an application is selected for funding. NIST has no obligation to provide any additional funding in connection with that award. Continuation of an award to increase funding or extend the period of performance is at the total discretion of NIST. Funding for each subsequent year of a multi-year proposal will be contingent upon satisfactory progress, continued relevance to the mission of the Physics Laboratory program, and the availability of funds. The multi-year awards must have scopes of work that can be easily separated into annual increments of meaningful work that represent solid accomplishments if prospective funding is not made available to the applicant, (i.e., the scopes of work for each funding period must produce identifiable and meaningful results in and of themselves).

Matching Requirements: The physics Laboratory Grants Program does not require any matching funds.

Application Kit: For the Physics Laboratory Grants Program, an application kit, containing all required application forms and certifications is available by contacting Ms. Anita Sweigert, (301) 975–4201.

MSEL Grants Program

Dates: The MSEL Grants Program proposals must be received no later than the close of business September 30, 2002. Proposals received after June 30, 2002 will continue to be processed and considered for funding but may be funded in the next fiscal year, subject to the availability of funds. Each application must submit one signed original and two copies of each proposal along with a Grant Application, (Standard Form 424 REV. 7/97 and other required forms).

Addresses: For the MSEL Grants Program, submit one signed original and two copies of the proposal, clearly marked to identify the field of research, to: Materials Science and Engineering Laboratory, Attn: Ms. Marlene Taylor, National Institute of Standards and Technology, 100 Bureau Drive, Stop 8501, Building 223, Room A305, Gaithersburg, Maryland 20899–8501, Tel: (301) 975–5653, E-mail: *marlene.taylor@nist.gov.*

Authority: The authority for the MSEL Grants Program is as follows: As authorized under 15 U.S.C. 272 (b) and (c), the MSEL conducts a basic and applied research directly and through grants and cooperative agreements to eligible recipients.

Program Description and Objectives: All proposals submitted to the MSEL Grants Program must be in accordance with the program objectives listed below. The appropriate Program Manager for each field of research may be contacted for clarification of the program objectives.

I. Ceramics Division, 852–The primary objective is to supplement division activities in the area of ceramic processing, tribology, composites, machining, interfacial chemistry, and microstructural analysis. The contact person for this division is: Dr. Ronald Munro and he may be reached at (301) 975–6127 or by e-mail at ronald.munro@nist.gov.

II. Polymers Division, 854—The primary objective is to support division programs in electronics materials, biomaterials, multiphase materials and processing characterization through participation in research on metrology, synthesis, processing and characterization of structure, mechanical, thermal and electrical properties. The contact person for this division is: Dr. Bruno Fanconi and he may be reached at (301) 975–6769 or by e-mail at bruno.fanconi@nist.gov.

III. Metallurgy Division, 855—The primary objective is to develop techniques to predict, measure and control transformation, phases, microstructure and kinetic processes as well as mechanical, physical and chemical properties in metals and their alloys. The contact person for this division is: Dr. Richard J. Fields and he may be reached at (301) 975–5712 or by e-mail at *richard.fields@nist.gov.*

IV. NIST Center for Neutron Research, 856—The primary objective is to develop high resolution cold and thermal neutron scattering research approaches and related physics, chemistry, macromolecular and materials applications. The contact person for this division is: Dr. John J. Rush and he may be reached at (301) 975–6231 or by e-mail at *john.rush@nist.gov.*

Eligibility: The MSEL Grants Program is open to institutions of higher education; hospitals; non-profit organizations; commercial organizations; state, local, and Indian tribal governments; foreign governments; organizations under the jurisdiction of foreign governments; and international organizations.

Funding Availability: In fiscal year 2002, the MSEL Grants Program anticipates funding of approximately $2,500,000, including new awards and continuing projects. Most grants and cooperative agreements are expected to be in the $25,000 to $100,000 per year range.

Proposal Review Process: For the MSEL Grants Program proposals will be reviewed in a two-step process. First, at least three independent, objective individuals knowledgeable about the particular scientific area described in the section above that the proposal addresses will conduct a technical review of proposals, as they are received on a rolling basis, based on the evaluation criteria. Second, the Division Chief or Center Director will make application selections. In making applications selections, the Division

Chief or Center Director will take into consideration the results of the reviewer's evaluations, the compatibility of the applicant's proposal with the program objectives of the particular division or center that the proposal addresses, the availability of funds, and relevance to the objectives of the MSEL Grants Program. These objectives are described above in the ''Program Objectives'' section. The final approval of selected applications and award of financial assistance will be made by the NIST Grants Officer based on compliance with application requirements as published in this notice, compliance with applicable legal and regulatory requirements, and whether the recommended applicants appear to be responsible. Applicants may be asked to modify objectives, work plans, or budgets and provide supplemental information required by the agency prior to award. The decision of the Grants Officer is final.

Evaluation Criteria: For the MSEL Grants Program, the evaluation criteria the technical reviewers will use in evaluating the proposals are as follows:

1. *Rationality.* Reviewers will consider the coherence of the applicant's approach and the extent to which the proposal effectively addresses scientific and technical issues.

2. *Qualifications of Technical Personnel.* Reviewer will consider the professional accomplishments, skills, and training of the proposed personnel to perform the work in the project.

3. *Resources Availability.* Reviewers will consider the extent to which the proposer has access to the necessary NIST or other facilities and overall support to accomplish project objectives.

4. *Technical Merit of Contribution.* Reviewers will consider the potential technical effectiveness of the proposal and the value it would contribute to the field of materials science and engineering and neutron research.

Each of these factors will be given equal weight in the evaluation process.

Award Period: For the MSEL Grants Program, proposals will be considered for research projects from one to three years. When a proposal for a multi-year award is approved, funding will generally be provided for only the first year of the program. If an application is selected for funding, NIST has no obligation to provide any additional funding in connection with the award. Continuation of an award to increase funding or extend the period of performance is at the total discretion of NIST. Funding for each subsequent year of a multi-year proposal will be contingent upon satisfactory progress, continued relevance to the mission of the MSEL program, and the availability of funds. The multi-year awards must have scopes of work that can be easily separated into annual increments of meaningful work and represent solid accomplishment if prospective funding is not made available to the applicant, (i.e., the scopes of work for each funding period must produce identifiable and meaningful results in and of themselves).

Matching Requirements: The MSEL Grants Program does not require any matching funds.

Application Kit: For the MSEL Grants Program, an application kit, containing all required application forms and certifications is available by contacting Ms. Marlene Taylor, (301) 975–5653.

Fire Research Grants Program

Dates: The Fire Research Grants Program proposals must be received no later than the close of business September 30, 2002. Proposals received after June 30, 2002 will continue to be processed and considered for funding but may be funded in the next fiscal year, subject to the availability of funds.

Addresses: For the Fire Research Grants Program submit one signed original and two copies of the proposal to: Building and Fire Research Laboratory (BFRL), Attn.: Ms. Wanda Duffin, National Institute of Standards and Technology, 100 Bureau Drive, Stop 8660, Gaithersburg, Maryland 20899–8660, Tel: (301) 975–6863, E-mail: *wanda.duffin@nist.gov,* Web site: *http://www.bfrl.nist.gov.*

Authority: As authorized by 15 U.S.C. 278f, the NIST Building and Fire Research Laboratory conducts directly and through grants and cooperative agreements, a basic and applied fire research program.

Program Description and Objectives: The program description and objectives for the Fire Research Grants Program are as follows:

A. *Analysis and Prediction:* The objectives are to develop understanding and predictive methods for dynamic fire phenomena to advance fire science and engineering practice and to perform research to understand the heat and mass transfer processes occurring in fires in order to improve predictions of the growth, spread, suppression, and emissions transport form fires of all scales. Experiments and metrology are developed and used to develop, support, and verify advanced computer simulations of fire phenomena, fire hazards, fire protection, and fire fighting. The contact person for this group is: Dr. Anthony Hamins, and he may be reached at (301) 975–6598.

B. *Fire Metrology:* The objective is to apply measurement science in the development and quantification of new and existing measurement methods for studying fire growth, fire-induced flows, flame radiation, smoke formation and dynamics, species production, heat transfer, fire suppression, and fire suppression, and fire detection. The contact person for this group is: Dr. George Mulholland, and he may be reached at (301) 975–6695.

C. *Fire Fighting Technology:* The objectives are to conduct research that enables advances in fire fighter safety, fire ground operations, and effectiveness of the fire service; develop and apply measurements, modeling and technology, and improve the understanding of the behavior, prevention and control of fires to enhance: Fire fighting operations and equipment, fire suppression, fire investigations, and disaster response; and provide input, including experimental data, fire modeling and test protocols, to advance the effectiveness of fire safety standards and codes. The contact person for this group is Mr. Nelson Bryner, and he may be reached at (301) 975–6868.

D. *Integrated Performance Assessment:* The objective is to produce tools utilizing enhanced data and prediction methods to quantify fire events for fire and hazard and risk assessment; for fire fighting operations and training; for fire investigations; and for performance evaluations of fire protection systems in buildings, transportation systems, and vehicles in response to fire. Stakeholders include architects and design engineers; manufacturers of building materials, products, and furnishings; code developers, enforcers, and regulatory authorities; and those exposed to direct risk such as building owners, occupants, the fire service, and the general public. The contact person for this group is: Dr. Kathy Notarianni, and she can be reached at (301) 975–6883.

E. *Materials and Products:* The objective is to perform research enabling the confident development by industry of new, less-flammable materials and products. This capability is based on understanding fundamentally the mechanisms that control the ignition, flame spread and burning rate of materials, as well as and the chemical and physical characteristics that affect these aspects of flammability. This includes: developing methods of measuring the response of a material to fire conditions that enable assured prediction of the full-scale performance of the final product; developing computational molecular dynamics and

other mechanistic approaches to understand flame retardant mechanisms and the effects of polymer chemical structure on flammability; characterizing the burning rates of charring and non-charring polymers and composites; and delineating and modeling the enthalpy and mass transfer mechanisms of materials combustion. The contact person for this group is Dr. Jefferey Gilman, and he can be reached at (301) 975–6573.

Eligibility: The Fire Research Grants Program is open to institutions of higher education; hospitals; non-profit organizations; commercial organizations; state, local, and Indian tribal governments; foreign governments; organizations under the jurisdiction of foreign governments; and international organizations.

Funding Availability: For the Fire Research Grants Program, the annual budget is approximately $1.0 million. Because of commitments for the support of multi-year projects, only a portion of the budget is available to initiate new programs in any one year. Most grants and cooperative agreements are in the $10,000 to $100,000 per year range.

Proposal Review Process: Responsive proposals will be assigned, as received on a rolling basis, to the appropriate group leader of the five programs listed above in the program description and objectives. Proposals are evaluated for technical merit based on the evaluation criteria by at least three reviewers chosen from NIST professionals, technical experts from other interested government agencies, and experts from the fire research community at large. When non-Federal reviewers are used, reviewers may discuss the proposals with each other, but scores will be determined on an individual basis, not as a consensus. Group leaders will make funding recommendations to the Division Chief based on the technical evaluation score and the relationship of the work proposed to the objectives of the program.

In making application selections, the Division Chief will take into consideration the results of the evaluations, the scores of the reviewers, the group leader's recommendation, the availability of funds, and relevance to the objectives of the Fire Research Grants Program, as described in the Program Description and Objectives section for this program.

The final approval of selected applications and award of financial assistance will be made by the NIST Grants Officer based on compliance with application requirements as published in this notice, compliance with applicable legal and regulatory requirements, and whether the recommended applicants appear to be responsible. Applicants may be asked to modify objectives, work plans, or budgets and provide supplemental information required by the agency prior to award. The award decision of the Grants Officer is final. Applicants should allow up to 90 days processing time.

Evaluation Criteria: For the Fire Research Grants Program, the technical evaluation criteria are as follows:

a. *Technical quality of the research.* Reviewers will assess the rationality, innovation and imagination of the proposal and the fit to NIST's in-house fire research program. (0–35 points).

b. *Potential impact of the results.* Reviewers will assess the potential impact and the technical application of the results to our in-house programs and the fire safety community. (0–25 points)

c. *Staff and institution capability to do the work.* Reviewers will evaluate the quality of the facilities and experience of the staff to assess the likelihood of achieving the objective of the proposal. (0–20 points)

d. *Match of budget to proposed work.* Reviewers will assess the budget against the proposed work to ascertain the reasonableness of the request. (0–20 points)

Award Period: For the Fire Research Grants Program, proposals will be considered for research projects from one to three years. When a proposal for a multi-year project is approved, funding will initially be provided for only the first year of the program. If an application is selected for funding, DoC has no obligation to provide any additional future funding in connection with that award. Funding for each subsequent year of a multi-year proposal will be contingent on satisfactory progress, continuing relevance to the mission of the NIST Fire Research Program, and the availability of funds.

Matching Requirements: The Fire Research Grants Program does not require any matching funds.

Application Kit: For the Fire Research Grants Program, an application kit, containing all required application forms and certifications is available by contacting Ms. Wanda Duffin, (301) 975–6863, web site: *http://www.bfrl.nist.gov.*

Additional Information: The Department of Commerce Pre-Award Notification Requirements for Grants and Cooperative Agreements contained in the **Federal Register** notice of October 1, 2001 (66 FR 49917) are applicable to this solicitation. In addition, the following information is applicable to all programs described above.

Funding Availability: For all Financial Assistance programs listed above, awards are contingent on the availability of funds.

Catalog of Federal Domestic Assistance Name and Number: Measurement and Engineering Research and Standards—11.609.

FOR FURTHER INFORMATION CONTACT: All grants related administration questions concerning these programs should be directed to the NIST Grants and Agreements Management Division at (301) 975–6328.

Where websites are referenced within this notice, those without websites may contact the appropriate Program official to obtain information.

Initial Screening of All Applications

All applications received in response to this announcement will be reviewed to determine whether or not they are complete and responsive. Incomplete or non-responsive applications will not be reviewed for technical merit. The Program will retain one copy of each non-responsive application for three years for recordkeeping purposes. The remaining copies will be destroyed.

Fees and/or Profit

It is not the intent of NIST to pay fee or profit for any of the financial assistance awards that may be issued pursuant to this announcement.

Automated Standardized Application for Payment System (ASAP)

During FY 2002 and becoming mandatory in FY 2003, the Department of Commerce will begin using the Department of Treasury's ASAP. NIST began using the ASAP system in July 2001 and continues to establish new accounts in ASAP. Awards made pursuant to this announcement may contain the ASAP payment clause. In order to receive payments for services under these awards, recipients will be required to register with the Department of Treasury and indicate whether or not they will use the on-line voice response method of withdrawing funds from their ASAP established accounts. More information regarding ASAP can be found on-line at http://www.fms.treas.gov/asap/index.html.

Paperwork Reduction Act

The standard forms in the application kit involve a collection of information subject to the Paperwork Reduction Act. The use of Standard Forms 424, 424A, 424B, SF–LLL, and CD–346 have been approved by OMB under the respective

Control Numbers 0348–0043, 0348–0044, 0348–0040, 0348–0046, and 0605–0001.

Notwithstanding any other provision of the law, no person is required to respond to, nor shall any person be subject to a penalty for failure to comply with, a collection subject to the requirements of the Paperwork Reduction Act, unless that collection of information displays a currently valid OMB Control Number.

Research Projects Involving Human Subjects, Human Tissue, Data or Recordings Involving Human Subjects

Any proposal that includes research involving human subjects, human tissue, data or recordings involving human subjects must meet the requirements of the Common Rule for the Protection of Human Subjects, codified for the Department of Commerce at 15 CFR part 27. In addition, any proposal that includes research on these topics must be in compliance with any statutory requirements imposed upon the Department of Health and Human Services (DHHS) and other federal agencies regarding these topics, all regulatory policies and guidance adopted by DHHS, FDA, and other federal agencies on these topics, and all Presidential statements of policy on these topics.

On December 3, 2000, the U.S. Department of Health and Human Services (DHHS) introduced a new Federalwide Assurance of Protection of Human Subjects (FWA). The FWA covers all of an institution's Federally-supported human subjects research, and eliminates the need for other types of Assurance documents. The Office of Human Research Protections (OHRP) has suspended processing of multiple project assurance (MPA) renewals. All existing MPAs will remain in force until further notice. For information about FWAs, please see the OHRP website at http://ohrp.osophs.dhhs.gov/irbasur.htm.

In accordance with the DHHS charge, NISH will continue to accept the submission of human subjects protocols that have been approved by Institutional Review Boards (IRBs) possessing a current, valid MPA from DHHS. NIST also will accept the submission of human subjects protocols that have been approved by IRBs possessing a current, valid FWA or MPA from DHHS. NIST will not issue a single project assurance (SPA) for any IRB reviewing any human subjects protocol proposed to NIST.

On August 9, 2001, the President announced his decision to allow Federal funds to be used for research on existing human embryonic stem cell lines as long as prior to his announcement (1) The derivation process (which commences with the removal of the inner cell mass from the blastocyst) had already been initiated and (2) the embryo from the which the stem cell line was derived no longer had the possibility of development as a human being. NIST will follow guidance issued by the National Institutes of Health at *http://escr.nih.gov/* for funding such research.

Research Projects Involving Vertebrate Animals

Any proposal that includes research involving vertebrate animals must be in compliance with the National Research Council's ''Guide for the Care and Use of Laboratory Animals'' which can be obtained from National Academy Press, 2101 Constitution Ave, NW., Washington, DC 20055. In addition, such proposals must meet the requirements of the Animal Welfare Act (7 U.S.C. 2131 *et seq.*), 9 CFR parts 1, 2, and 3, and if appropriate, 21 CFR part 58. These regulations do not apply to proposed research using pre-existing images of animals or to research plans that do not include live animals that are being cared for, euthanased, or used by the project participants to accomplish research goals, teaching, or testing. These regulations also do not apply to obtaining animal materials from commercial processors of animal products or to animal cell lines or tissues from tissue banks.

Matching Funds

Although many of the programs described in this notice do not require cost share, if it is determined that your proposal falls within the authority of 19 U.S.C. 2543–45 cost share will be required as follows:

Pursuant to 19 U.S.C. 2543–45, financial assistance shall not exceed 75 percent of such program or activity, when the primary purpose of such program or activity is—

(1) To increase the awareness of proposed and adopted standards-related activities;

(2) To facilitate international trade through the appropriate international and domestic standards-related activities;

(3) To provide adequate United States representation in international standards-related activities; and

(4) To encourage United States exports through increase awareness of foreign standards-related activities that may affect United States exports.

Type of Funding Instrument

The funding instrument will be a grant or cooperative agreement, depending on the nature of the proposed work. A grant will be used unless NIST is ''substantially involved'' in the project, in which case a cooperative agreement will be used. A common example of substantial involvement is collaboration between NIST scientist and recipient scientists or technicians. Further examples are listed in section 5.03.d of Department of Commerce Administrative Order 203–26, which can be found at *http://www.osec.doc.gov/bmi/daos/203–26.htm.* NIST will make decisions regarding the use of a cooperative agreement on a case-by-case basis. Funding for contractual arrangements for services and products for delivery to NIST is not available under this announcement.

Indirect Costs

For the EEEL, MEL, CSTL, Physics, MSEL, BFRL, and ITL SURF Programs, no Federal funds will be authorized for Indirect Costs (IDC) nor fringe benefits; however, an applicant may provide for IDC and/or fringe benefits under his/her portion of Cost Sharing.

Classification

This funding notice was determined to be ''not significant'' for purposes of Executive Order 12866.

It has been determined that this notice does not contain policies with Federalism implications as that term is defined in Executive Order 13132.

Applications under these programs are not subject to Executive Order 12372, ''Intergovernmental Review of Federal Programs.''

Because notice and comment are not required under 5 U.S.C. 553, or any other law, for notices relating to public property, loans, grants, benefits or contracts (5 U.S.C. 553(a)), a Regulatory Flexibility Analysis is not required and has not been prepared for this notice, 5 U.S.C. 601 *et seq.*

Dated: December 18, 2001.

Karen H. Brown,

Deputy Director, NIST.

[FR Doc. 01–31573 Filed 12–26–01; 8:45 am]

BILLING CODE 3510–13–M

DEPARTMENT OF COMMERCE

National Oceanic and Atmospheric Administration

[I.D. 121801F]

Marine Mammals; File No. 1019–1657

AGENCY: National Marine Fisheries Service (NMFS), National Oceanic and Atmospheric Administration (NOAA), Commerce.

ACTION: Receipt of application.

SUMMARY: Notice is hereby given that Daniel J. Cox, Natural Exposures, 16595 Brackett Creek Road, Bozeman, Montana 59715 has applied in due form for a permit to take Northern elephant seals (*Mirounga angustirostris*) for purposes of commercial/educational photography.

DATES: Written or telefaxed comments must be received on or before January 28, 2002.

ADDRESSES: The application and related documents are available for review upon written request or by appointment in the following office(s):

Permits, Conservation and Education Division, Office of Protected Resources, NMFS, 1315 East-West Highway, Room 13705, Silver Spring, MD 20910; phone (301) 713–2289; fax (301) 713–0376; and

Southwest Region, NMFS, 501 West Ocean Blvd., Suite 4200, Long Beach, CA 90802–4213; phone (562) 980–4001; fax (562) 980–4018.

FOR FURTHER INFORMATION CONTACT: Lynne Barre or Jill Lewandowski, (301) 713–2289.

SUPPLEMENTARY INFORMATION: The subject permit is requested under the authority of the Marine Mammal Protection Act of 1972, as amended (MMPA; 16 U.S.C. 1361 *et seq.*) and the Regulations Governing the Taking and Importing of Marine Mammals (50 CFR part 216). Section 104 (c)(6) of the MMPA provides for photography permits for educational or commercial purposes involving non-endangered and non-threatened marine mammals in the wild. NMFS is currently working on proposed regulations to implement this provision. However, in the meantime, NMFS has received and is processing this request as a ''pilot'' application for Level B Harassment of non-listed marine mammals for photographic purposes.

The applicant proposes to take up to 60 Northern elephant seals by close approach during still photography activities for a National Geographic Magazine Photo Essay. Photography is proposed along the coast of California including San Simeon, Piedras Blancas, Ano Nuevo State Reserve, Point Reyes National Seashore and the Farallones and Channel Islands and will take place during January and February of 2002 and in January and February of 2003 as well if additional photos are needed.

In compliance with the National Environmental Policy Act of 1969 (42 U.S.C. 4321 et seq.), an initial determination has been made that the activity proposed is categorically excluded from the requirement to prepare an environmental assessment or environmental impact statement.

Written comments or requests for a public hearing on this application should be mailed to the Chief, Permits, Conservation and Education Division, F/PR1, Office of Protected Resources, NMFS, 1315 East-West Highway, Room 13705, Silver Spring, MD 20910. Those individuals requesting a hearing should set forth the specific reasons why a hearing on this particular request would be appropriate.

Comments may also be submitted by facsimile at (301) 713–0376, provided the facsimile is confirmed by hard copy submitted by mail and postmarked no later than the closing date of the comment period. Please note that comments will not be accepted by e-mail or by other electronic media.

Concurrent with the publication of this notice in the **Federal Register**, NMFS is forwarding copies of this application to the Marine Mammal Commission and its Committee of Scientific Advisors.

Dated: December 19, 2001.

Ann D. Terbush,

Chief, Permits, Conservation and Education Division, Office of Protected Resources, National Marine Fisheries Service.

[FR Doc. 01–31833 Filed 12–26–01; 8:45 am]

BILLING CODE 3510–22–S

DEPARTMENT OF COMMERCE

National Oceanic and Atmospheric Administration

[I.D. 120701A]

Marine Mammals; File No. 779–1633–00

AGENCY: National Marine Fisheries Service (NMFS), National Oceanic and Atmospheric Administration (NOAA), Commerce.

ACTION: Issuance of permit.

SUMMARY: Notice is hereby given that the Southeast Fisheries Science Center, National Marine Fisheries Service, 75 Virginia Beach Drive, Miami, FL 33149 (Principal Investigator: Dr. Keith D. Mullin) has been issued a permit to take marine mammals for purposes of scientific research.

ADDRESSES: The permit and related documents are available for review upon written request or by appointment in the following office(s):

Permits and Documentation Division, Office of Protected Resources, NMFS, 1315 East-West Highway, Room 13705, Silver Spring, MD 20910; phone (301) 713–2289; fax (301) 713–0376;

Northeast Region, NMFS, One Blackburn Drive, Gloucester, MA 01930–2298; phone (978) 281–9200; fax (978) 281–9371;

Southeast Region, NMFS, 9721 Executive Center Drive North, St. Petersburg, FL 33702–2432; phone (727) 570–5301; fax (727) 570–5320.

FOR FURTHER INFORMATION CONTACT: Ruth Johnson or Tammy Adams, (301)713–2289.

SUPPLEMENTARY INFORMATION: On August 16, 2001, notice was published in the **Federal Register** (66 FR 42997) that a request for a scientific research permit to take marine mammals had been submitted by the above-named organization. The requested permit has been issued under the authority of the Marine Mammal Protection Act of 1972, as amended (16 U.S.C. 1361 *et seq.*), the Regulations Governing the Taking and Importing of Marine Mammals (50 CFR part 216), the Endangered Species Act of 1973, as amended (ESA; 16 U.S.C. 1531 et seq.), and the regulations governing the taking, importing, and exporting of endangered and threatened species (50 CFR parts 222–226).

Issuance of this permit, as required by the ESA, was based on a finding that such permit (1) was applied for in good faith, (2) will not operate to the disadvantage of the endangered species which is the subject of this permit, and (3) is consistent with the purposes and policies set forth in section 2 of the ESA.

Dated: December 19, 2001.

Ann D. Terbush,

Chief, Permits, Conservation and Education Division, Office of Protected Resources, National Marine Fisheries Service.

[FR Doc. 01–31834 Filed 12–26–01; 8:45 am]

BILLING CODE 3510–22–S

DEPARTMENT OF COMMERCE

Technology Administration

National Medal of Technology Nomination Evaluation Committee (NMTNEC)

AGENCY: Technology Administration, U.S. Department of Commerce.

ACTION: Notice of Recruitment for Additional Members for NMTNEC.

SUMMARY: The Department of Commerce, Technology Administration (TA), requests nominations of individuals for appointment to the National Medal of Technology Nomination Evaluation Committee (NMTNEC). The Committee provides advice to the Secretary on the implementation of Public Law 96–480 (15 U.S.C. 3711) under the Federal Advisory Committee Act, 5 U.S.C. app. 2. Public Law 105–309; 15 U.S.C. 3711, Section 10, approved by the 105th Congress in 1998, added the National Technology Medal for Environmental Technology.

DATES: Please submit nominations within 30 days of the publication of this notice.

ADDRESSES: Submit nominations to the National Medal of Technology Program Office, Technology Administration, U. S. Department of Commerce, 1401 Constitution Avenue, NW., Room 4226, Washington, DC 20230. Materials may be faxed to 202–501–8153.

FOR FURTHER INFORMATION CONTACT: Mildred Porter, Director, 202–482–5572.

SUPPLEMENTARY INFORMATION: The National Medal of Technology Nomination Evaluation Committee will be rechartered for a period of two years to provide advice to the Secretary on the implementation of Public Law 96–480 (15 U.S.C. 3711) under the Federal Advisory Committee Act, 5 U.S.C. app. 2. The Committee serves as an advisory body to the Under Secretary. Members are responsible for reviewing nominations and making recommendations for the Nation's highest honor for technological innovation, awarded annually by the President of the United States. Members of the Committee have an understanding of, and experience in, developing and utilizing technological innovation and/or they are familiar with the education, training, employment and management of technological human resources.

Under the Federal Advisory Committee Act, membership in a committee constituted under the Act must be balanced. To achieve balance, the Department is seeking additional nominations of candidates from small, medium-sized, and large businesses or with special expertise in the following subsectors of the technology enterprise:

- Biomedical/Pharmaceutical/Health
- Chemistry, product development
- Human Resources/education/technology management
- Other: industry analysts (including manufacturing, environmental technology, transportation, telecommunications)

Typically, Committee members are present or former Chief Executive Officers, former winners of the National Medal of Technology; presidents or distinguished faculty of universities; or senior executives of non-profit organizations. As such, they not only offer the stature of their positions but also possess intimate knowledge of the forces determining future directions for their organizations and industries. The Committee as a whole is balanced in representing geographical, professional, and diversity interests. Nominees must be U. S. citizens, must be able to fully participate in meetings pertaining to the review and selection of finalists for the National Medal of Technology, and must uphold the confidential nature of an independent peer review and competitive selection process.

The Department of Commerce is committed to equal opportunity in the workplace and seeks a broad-based and diverse Committee membership.

Phillip J. Bond,

Under Secretary of Commerce for Technology, Technology Administration.

[FR Doc. 01–31839 Filed 12–26–01; 8:45 am]

BILLING CODE 3510–18–P

COMMISSION OF FINE ARTS

2002 National Capital Arts and Cultural Affairs Program

Notice is hereby given that Public Law 99–190, as amended, authorizing the National Capital Arts and Cultural Affairs Program, has been funded for 2002 in the amount of $7,000,000.00. All requests for information and applications for grants should be received by 31 December 2001 and addressed to: Charles H. Atherton, Secretary, Commission of Fine Arts, National Building Museum, Suite 312, 441 F Street, NW., Washington, DC 20001, Phone: 202–504–2200.

Deadline for receipt of grant applications is March 1, 2002.

This program provides grants for general operating support of organizations whose primary purpose is performing, exhibiting, and/or presenting the arts. To be eligible for a grant, organizations must be located in the District of Columbia, must be non-profit, non-academic institutions of demonstrated national repute, and must have annual incomes, exclusive of federal funds, in excess of one million dollars for each of the past three years.

Charles H. Atherton,

Secretary.

[FR Doc. 01–31693 Filed 12–26–01; 8:45 am]

BILLING CODE 6330–01–M

COMMISSION OF FINE ARTS

Notice of Meeting

The next meeting of the Commission of Fine Arts is scheduled for 20 December 2001 at 10 am in the Commission's offices at the National Building Museum, Suite 312, Judiciary Square, 441 F Street, NW., Washington, DC, 20001–2728. Items of discussion affecting the appearance of Washington, DC, may include buildings, parks and memorials.

Draft agendas are available to the public one week prior to the meeting. Inquiries regarding the agenda and requests to submit written or oral statements should be addressed to Charles H. Atherton, Secretary, Commission of Fine Arts, at the above address or call 202–504–2200. Individuals requiring sign language interpretation for the hearing impaired should contact the Secretary at least 10 days before the meeting date.

Dated: Dated in Washington, DC, November 26, 2001.

Charles H. Atherton,

Secretary.

[FR Doc. 01–31692 Filed 12–26–01; 8:45 am]

BILLING CODE 6330–01–M

CORPORATION FOR NATIONAL AND COMMUNITY SERVICE

Funding Opportunity for AmeriCorps*VISTA Financial Asset Development Projects, Placements of AmeriCorps*VISTA Members, and Supervisory Grants; Correction

AGENCY: Corporation for National and Community Service.

ACTION: Notice; correction.

SUMMARY: The Corporation for National and Community Service published a document in the **Federal Register** of December 14, 2001, concerning its funding opportunity for AmeriCorps*VISTA financial asset development projects, AmeriCorps*VISTA member placements, and supervisory grants. The document contained incorrect information.

FOR FURTHER INFORMATION CONTACT: Mr. David Gurr, (202) 606–5000, Ext. 212.

Correction

In the **Federal Register** of December 14, 2001, in FR Doc. 01–30843, on page 64806, in the second column, under **SUMMARY,** paragraph 4. The entire paragraph is corrected to read as follows:

A total of up to 400 AmeriCorps*VISTA members may be allocated for placement. Applicant organizations will be expected to place no less than three (3) AmeriCorps*VISTA members per site. Under this announcement, small supervision grants for all sponsors selected for a supervisory grant of up to approximately $200,000 total, will be considered based on the size and scope of the project. Short-term, eight-to-ten week summer placements may also be requested under this announcement.

Dated: December 19, 2001.

Matt Dunne,

*Director, AmeriCorps*VISTA.*

[FR Doc. 01–31700 Filed 12–26–01; 8:45 am]

BILLING CODE 6050–$$–P

DEPARTMENT OF ENERGY

Office of Science Financial Assistance Notice 02–06: Albert Einstein Distinguished Educator Fellowship Program Administration

AGENCY: U.S. Department of Energy (DOE).

ACTION: Notice inviting grant applications.

SUMMARY: The Office of Science of the U.S. Department of Energy (DOE) announces its interest in receiving grant applications for support to administer the Albert Einstein Distinguished Educator Fellowship Program. Applications should be from not-for-profit organizations that have experience in administering national programs. The purpose of the program is designed to provide outstanding elementary and secondary mathematics and science teachers the opportunity to bring to Congress and appropriate branches of the Federal government the insights, extensive knowledge, and practical experience of classroom teachers. As Albert Einstein Fellows, teachers can help to increase the understanding, communication, and cooperation between Congress, the Department of Energy, other Federal Agencies, and the mathematics and science education community.

DATES: To permit timely consideration for awards in FY 2002, formal applications in response to this notice should be received on or before January 30, 2002.

ADDRESSES: Completed formal applications referencing Program Notice 02–06 should be forwarded to: U.S. Department of Energy, Office of Science, Grants and Contracts Division, SC–64, 19901 Germantown Road, Germantown, Maryland 20874–1290, ATTN: Program Notice 02–06. The above address must also be used when submitting applications by U.S. Postal Service Express, any other commercial mail delivery service or when hand carried by the applicant.

FOR FURTHER INFORMATION CONTACT: Cindy Musick, U.S. Department of Energy, Office of Science, SC–1 (FRSTL), 1000 Independence Avenue, SW., Washington, DC 20585. E-mail: *Cindy.Musick@science.doe.gov.*

SUPPLEMENTARY INFORMATION: The Albert Einstein Distinguished Educator Fellowship Act was signed into law in November 1994. The law gives the Department of Energy responsibility for administering the program of Distinguished Educator Fellowships for elementary and secondary school mathematics and science teachers. Selected teachers spend up to one year in a Congressional Office, the Department of Energy (DOE), or in one of several other participating agencies, including the National Science Foundation (NSF), the National Aeronautics and Space Administration (NASA), the National Institutes of Standards and Technology (NIST), the National Institutes of Health (NIH), the Department of Education (ED), or the White House Office of Science and Technology Policy (OSTP).

Administration of the Albert Einstein Distinguished Educator Fellowship program must include, but is not limited to, the following: (1) Advertise and market the program, which may include a website, electronic bulletin boards, educational journals, professional meetings, or through local, state and national alliances; (2) administer the application and review process, including responding to inquiries regarding the application process and conducting the review of all applications; (3) administer the interview process of semi-finalists who come to Washington, including travel and lodging logistics and interview arrangements with all participating agencies; (4) plan and organize the orientation of all new Fellows; (5) provide letters and news releases of Fellow appointments; (6) facilitate the 10-month fellowships, including coordinating all Hill interviews and placements, and planning professional development activities; (7) monitor the quality of each fellowship experience and provide evaluation of the program to the Department; and (8) prepare and submit an annual report to the Department and to the Congress, as directed by the legislation.

It is anticipated that the funding level for FY 2002 will be up to $460,000. Contingent upon the availability of appropriated funds, DOE expects to make one grant in FY 2002 to meet the objectives of this program. Multiple year funding of this grant is expected, ranging from $450,000 to $500,000 per year for up to a five-year project period, with funding provided on an annual basis subject to availability of funds.

Merit Review

Applications will be subjected to a scientific merit review and will be evaluated against the following criteria, which are listed in descending order of importance as set forth in 10 CFR Part 605:

1. Educational benefits of the Project;

2. Appropriateness of the proposed method or approach;

3. Competency of applicant's personnel and adequacy of proposed resources; and

4. Reasonableness and appropriateness of the proposed budget.

General information about development and submission of applications, eligibility, limitations, evaluations and selection processes, and other policies and procedures are contained in the Application Guide for the Office of Science Financial Assistance Program and 10 CFR part 605 which is available on the World Wide Web at: *http://www.science.doe.gov/production/grants/grants.html.* DOE is under no obligation to pay for any costs associated with the preparation or submission of applications if an award is not made.

The Catalog of Federal Domestic Assistance Number for this program is 81.049, and the solicitation control number is ERFAP 10 CFR part 605.

Issued in Washington, DC on December 17, 2001.

John Rodney Clark,

Associate Director of Science for Resource Management.

[FR Doc. 01–31716 Filed 12–26–01; 8:45 am]

BILLING CODE 6450–02–U

DEPARTMENT OF ENERGY

Office of Science; Office of Biological and Environmental Research; Recommendations for Sequencing Targets in Support of the Microbial Genome Program and the Genomes to Life Program

AGENCY: U.S. Department of Energy (DOE).

ACTION: Recommendations for sequencing targets.

SUMMARY: This **Federal Register** Notice seeks the input and nominations of interested parties for candidate microbes and candidate microbial communities, for draft genomic sequencing in support of the Microbial Genome Program (MGP) and the Genomes to Life (GTL) Program. Candidate microbes and microbial communities should be relevant to DOE mission needs, e.g., microbes involved in environmental processes, including waste remediation, carbon management, energy production, and biodefense. This announcement is not an offer of direct financial support for research on these microbes. Those nominations selected will result in the DNA sequence of selected microbes being determined at a draft level (6–8 X coverage) at the DOE Production Genomics Facility (PGF) at the Joint Genome Institute (JGI), (*http://www.jgi.doe.gov*). This announcement is designed to assist DOE in determining and prioritizing a list of microbes, or microbial consortia that address DOE mission needs. Following merit review, and subject to the availability of funding and programmatic relevance, draft sequencing will be carried out at the PGF.

DATES: To assure consideration, nominations in response to this notice should be received by 4:30 p.m. (EST), March 28, 2002, to be accepted for merit review. It is anticipated that review will be completed early in the summer of 2002 with draft sequencing at the DOE PGF to commence later in 2002, but not before high quality DNA has been provided.

ADDRESSES: Written nominations responding to this notice should be sent to Dr. Daniel W. Drell, Office of Biological and Environmental Research, SC–72, Office of Science, U.S. Department of Energy, 19901 Germantown Road, Germantown, MD 20874–1290; e-mail is acceptable for submitting nominations using the following addresses: *joanne.corcoran@science.doe.gov* and *daniel.drell@science.doe.gov.*

FOR FURTHER INFORMATION CONTACT: Dr. Daniel W. Drell, SC–72, Office of Biological and Environmental Research, Office of Science, U.S. Department of Energy, 19901 Germantown Road, Germantown, MD 20874–1290, phone: (301) 903–4742, e-mail: *daniel.drell@science.doe.gov.* The full text of this notice is available via the Internet using the following Web site addresses: *http://doegenomestolife.org* and *http://www.sc.doe.gov/ober/microbial.html.*

SUPPLEMENTARY INFORMATION: The MGP supports key DOE business areas by providing and analyzing microbial DNA sequence information to further the understanding and application of microbiology relating to energy production, chemical and materials production, environmental carbon management, environmental cleanup, and biodefense. The GTL Program builds on the successes of the DOE Human Genome Program (HGP) by seeking to understand biological functioning with emphases on identifying the multi-component protein complexes in cells, characterizing gene regulatory networks, probing the functional capabilities of the environmental microbial repertoire of genes, and beginning to model these processes computationally. A major goal is to support research on microbes that address DOE Office of Biological and Environmental Research (BER) missions and programs. Relevant BER programs may include Terrestrial and Ocean Carbon Sequestration, the Natural and Accelerated Bioremediation Research (NABIR) Program, the Biotechnological Investigation of Ocean Margins Program (BI–OMP), the Microbial Genome Program (MGP), the Genomes to Life (GTL) program, and the National Nuclear Security Administration's Chemical and Biological National Security Program.

These programs are natural outgrowths of past and current BER Programs, including DNA sequencing from the HGP, structural biology studies utilizing BER-supported facilities at synchrotron and neutron sources located at DOE laboratories, and molecular microbiological research supported by BER environmental programs. These programs benefit from, and provide new scientific challenges to, the DOE national laboratories, the DOE and National Institutes of Health (NIH) Human Genome Centers, the U. S. Department of Agriculture (USDA), the National Science Foundation (NSF), the National Center for Biotechnology Information (NCBI) at the NIH, and the capabilities of universities and non-profit organizations.

Over the last 5 years, sequencing of a range of microorganisms that live in a wide diversity of environments has provided considerable information base for scientific research related not only to DOE missions, but also to other federal agency missions and U.S. industry. (*http://www.tigr.org/tdb/mdb/mdbcomplete.html http://www.ornl.gov/microbialgenomes/organisms.html* and *http://www.jgi.doe.gov/JGI_microbial/html/*). Nonetheless, most of our current knowledge of microbiology still is derived from individual species that either cause diseases or grow easily and readily as monocultures under laboratory conditions and are thus easy to study. The preponderance of species in the environment remains largely unknown to science. Most are thought to grow as part of interdependent consortia in which one species supplies a nutrient necessary for the growth of another. Virtually nothing is known of the organization, membership, or functioning of these consortia, especially those involved in environmental processes in which DOE is interested.

A related issue emerging from genome sequence analyses is the need to develop a better understanding of relatedness or phylogeny using genomics as a tool. Genomic analyses of sequenced microbes have suggested that processes such as lateral gene transfers early in the evolutionary history of some microbial ''species'' have blurred this understanding, and therefore the phylogeny, among microorganisms that had been thought to have known relationships. For this notice, groups of microbes that are thought to have a species relationship can be proposed to explore what the concept of a microbial species entails and how much sequence divergence defines different species.

Genomic analyses of microbial consortia, and of those species that have proven refractory to laboratory culture, but are either plentiful in environments challenged with chemical contamination, metals, and/or radionuclide wastes, or involved in carbon sequestration are badly needed. These are expected to be the most challenging studies. The candidate(s) must mediate or catalyze metabolic events of energy or environmental importance. Priority will be given to studies on those microbes or microbial consortia that can bioremediate metals and radionuclides, that can degrade significant biopolymers such as celluloses and lignins, or that produce potentially useful energy-related materials (H_2, CH_4,, ethanol, etc.), or that

are involved in environmental carbon management, e.g., fix or sequester CO_2,.

An additional interest of this notice is microbes that are phylogenetically related to potential biowarfare (BW) threat agents. The Centers for Disease Control and Prevention defines three categories of BW threats (see at *http://www.bt.cdc.gov/Agent/Agentlist.asp*). DOE encourages nominations to sequence microbes or groups of microbes related to the category A and B agents.

For this notice, candidate microorganisms, either individual microbes, groups of microbes, or a consortia of microbes, for draft sequencing can comprise archaea, bacteria, fungi or eukaryotic microbes with genome sizes <60 Mbp, or communities made up of these same types of microbes. For a current list of microbes that have been and are being sequenced see *http://www.ornl.gov/microbial genomes/organisms.html.*

Aims: This request for nominations of candidate microbial sequencing targets has two broad foci:

(1) *Single culturable organisms.* The criteria that will be used to evaluate proposed candidates for draft sequencing will include:

(a) The candidate is likely to have significant relevance to the DOE missions noted above;

(b) The genome size and structure are known;

(c) The source of genomic DNA (i.e., strain or isolate, and researcher) is identified;

(d) A brief description of post sequencing follow-up work (e.g., a data use plan and how will data be annotated to enable rapid and open use) is included;

(e) The availability of a DNA/gene transfer system supporting genetic analyses is known;

(f) Biological novelty or uniqueness (i.e., unusual genetically determined characteristics pertinent to DOE missions) is described;

(g) Place in the currently understood, 16s RNA based, ''Tree of Life'' is identified, e.g., is the proposed candidate in a sparsely populated or more heavily populated section of the tree?

(h) A brief description of the user community is given;

(i) The potential impact on the scientific community is large;

(j) Explicit commitment to data-release policy given below is provided.

(2) *Currently unculturable or hard-to-culture microbes and environmental consortia.* The review criteria that will be used to evaluate proposed candidates for draft sequencing will include most of the criteria listed above for single culturable organisms (with less emphasis on genome size/structure, presence/absence of a genetic system, or position in the ''Tree of Life'' since it is recognized that few data on these attributes will be available), but in addition, the following considerations will be included:

(a) Some measure of the ''complexity'' of the target community is proposed, e.g., approximate number of species, size(s) of genomes, and proportions of different community members (it is understood that in most cases, only estimates of these parameters may be available);

(b) Past attempts to cultivate community members are described, e.g., have any members of this community been successfully cultured;

(c) Some spatial/temporal/geochemical characterization of the environment is given, e.g., the physicochemical parameters of the site from which the selected community is derived; a description of the site contaminants; the accessibility of the site for future sampling; the adequacy of site documentation;

(d) If proposed, technical approaches and technology development specific for defining and isolating members of a given community are described;

(e) Some indication of the biological function of the consortial relationships where available along with a discussion of the scientific and programmatic importance of understanding these relationships;

(f) Information where available about the phylogenetic affinities of the members of the consortia and what is known about the closely related organisms.

(g) Available informatics tools and annotation plan (e.g. for annotating genes from a community analysis or grouping identified genes into a putative ''community phenotype'' within the chosen environment).

Usual and customary practice is for the JGI to put all sequencing data up on its web site (*http://www.jgi.doe.gov/*) at frequent and periodic intervals. DOE expects that the Principal Investigators (PI) will collaborate with the JGI and assist in annotating the draft sequence data. Following data acquisition and annotation, DOE expects that those whose nominations have been sequenced will make good faith efforts to publish in the open scientific literature the results of their subsequent work, including both the genome sequences of microbes sequenced under this notice as well as the annotation. These parties are encouraged to create process- and cost-effective partnerships that will maximize data production and analysis, data dissemination, and progress towards understanding basic biological mechanisms that can further the aims of this effort. Additionally, it must be explicitly understood that DOE will provide an assembled and computationally annotated ''draft'' (roughly 8 x; carried out in a paired-end sequencing approach) sequence of the microbe(s) selected, but that research using that sequence data should be funded from separate sources and/or separate solicitations. This draft sequence is provided, without use restrictions, to the scientific community at large for any and all subsequent research purposes. (DOE data release requirements, a condition of any award, are available at: *http://www.sc.doe.gov/ober/EPR/data.html*)

Submission Information: Interested parties should submit a brief white paper, consisting of not more than 5 pages of narrative exclusive of attachments (which are discouraged) responding to the criteria set forth above. It is expected that the PI will serve as the main point of contact for additional information on the nominated microbe. Nominations must contain a very short abstract or project summary and a cover page with the name of the applicant, mailing address, phone, fax, and e-mail. The nomination should include 2-page curriculum vitae of the key investigators; letters of intent from collaborators (suggesting the size of the interested community) are permitted.

Nominations will be reviewed relative to the scope and research needs of the BER Microbial Genome and Genomes to Life Programs. A brief response to each nomination will be provided following merit and programmatic reviews.

Other useful web sites include:

Microbial Genome Program Home Page—*http://www.sc.doe.gov/ober/microbial.html*

DOE Joint Genome Institute Microbial Web Page—*http://www.jgi.doe.gov/JGI_microbial/html/*

GenBank Home Page—*http://www.ncbi.nlm.nih.gov/*

Human Genome Home Page—*http://www.ornl.gov/hgmis*

DOE Genomes to Life—*http://DOEGenomestoLife.org*

DOE Natural and Accelerated Bioremediation Research (NABIR) Program—*http://www.lbl.gov/nabir*

Biotechnology Investigations—Ocean Margins Program—*http://www.sc.doe.gov/ober/GC/omp.html*

Chemical and Biological National Security Program— *http://www.nn.doe.gov/cbnp/*

Issued in Washington, DC.

John Rodney Clark,

Associate Director of Science for Resource Management.

[FR Doc. 01–31717 Filed 12–26–01; 8:45 am]

BILLING CODE 6450–01–P

DEPARTMENT OF ENERGY

Federal Energy Regulatory Commission

[Docket No. EC02–34–000] and Ameren Energy Resources Company; Notice of Filing

Central Illinois Public Service Company

December 19, 2001.

Take notice that on December 13, 2001, Central Illinois Public Service Company (AmerenCIPS) and Ameren Energy Resources Company (Resources Company) (collectively, the Applicants) filed with the Federal Energy Regulatory Commission an application for an order pursuant to section 203 of the Federal Power Act authorizing AmerenCIPS to transfer to Resources Company its 20% common stock interest in Electric Energy, Inc. (EEInc.).

The Applicants state that the transaction simply involves an internal reorganization within Ameren Corp. and will not have an adverse effect on competition, will not have an adverse effect on rates, and will not have an adverse effect on competition.

Any person desiring to be heard or to protest such filing should file a motion to intervene or protest with the Federal Energy Regulatory Commission, 888 First Street, NE., Washington, DC 20426, in accordance with Rules 211 and 214 of the Commission's rules of practice and procedure (18 CFR 385.211 and 385.214). All such motions and protests should be filed on or before the comment date. Protests will be considered by the Commission to determine the appropriate action to be taken, but will not serve to make protestants parties to the proceedings. Any person wishing to become a party must file a motion to intervene. Copies of this filing are on file with the Commission and are available for public inspection. This filing may also be viewed on the Commission's Web site at *http://www.ferc.gov* using the ''RIMS'' link, select ''Docket#'' and follow the instructions (call 202–208–2222 for assistance). Comments, protests and interventions may be filed electronically via the internet in lieu of paper. See, 18 CFR 385.2001(a)(1)(iii) and the instructions on the Commission's Web site under the ''e-filing'' link.

Comment Date: January 9, 2002.

Linwood A. Watson, Jr.,

Acting Secretary.

[FR Doc. 01–31685 Filed 12–26–01; 8:45 am]

BILLING CODE 6717–01–P

DEPARTMENT OF ENERGY

Federal Energy Regulatory Commission

[Docket No. RP02–121–000]

Eastern Shore Natural Gas Company; Notice of Proposed Changes in FERC Gas Tariff

December 19, 2001.

Take notice that on December 11, 2001, Eastern Shore Natural Gas Company (ESNG) tendered for filing as part of its FERC Gas Tariff, Second Revised Volume No. 1, certain revised tariff sheets listed on Appendix A to the filing, with a proposed effective date of January 1, 2002.

ESNG states that the purpose of this instant filing is to track rate changes attributable to a storage services purchased from Columbia Gas Transmission (Columbia) under its Rate Schedules SST and FSS. The costs of the above referenced storage service comprises the rates and charges payable under ESNG's respective Rate Schedule CFSS. This tracking filing is being made pursuant to section 3 of ESNG's Rate Schedule CFSS.

ESNG states that copies of the filing have been served upon its jurisdictional customers and interested State Commissions.

Any person desiring to be heard or to protest said filing should file a motion to intervene or a protest with the Federal Energy Regulatory Commission, 888 First Street, NE., Washington, DC 20426, in accordance with sections 385.214 or 385.211 of the Commission's rules and regulations. All such motions or protests must be filed in accordance with section 154.210 of the Commission's regulations. Protests will be considered by the Commission in determining the appropriate action to be taken, but will not serve to make protestants parties to the proceedings. Any person wishing to become a party must file a motion to intervene. Copies of this filing are on file with the Commission and are available for public inspection. This filing may also be viewed on the web at *http://www.ferc.gov* using the ''RIMS'' link, select ''Docket#'' and follow the instructions (call 202–208–2222 for assistance). Comments, protests and interventions may be filed electronically via the Internet in lieu of paper. See, 18 CFR 385.2001(a)(1)(iii) and the instructions on the Commission's web site under the ''e-Filing'' link.

Linwood A. Watson, Jr.,

Acting Secretary.

[FR Doc. 01–31689 Filed 12–26–01; 8:45 am]

BILLING CODE 6717–01–P

DEPARTMENT OF ENERGY

Federal Energy Regulatory Commission

[Docket No. RP02–122–000]

Kinder Morgan Interstate Gas Transmission, LLC; Notice of Reconciliation Report

December 19, 2001.

Take notice that on December 13, 2001, Kinder Morgan Interstate Gas Transmission, LLC, (KMITG) tendered for filing its annual reconciliation filing pursuant to section 35 (Crediting of Imbalance Revenue) of its General Terms and Conditions of its FERC Gas Tariff, Fourth Revised Volume No. 1–B.

KMIGT states that it has served copies of its filing upon all jurisdictional customers, interested State Commissions, and other interested parties.

Any person desiring to be heard or to protest said filing should file a motion to intervene or a protest with the Federal Energy Regulatory Commission, 888 First Street, NE., Washington, DC 20426, in accordance with sections 385.214 or 385.211 of the Commission's rules and regulations. All such motions or protests must be filed on or before December 26, 2001. Protests will be considered by the Commission in determining the appropriate action to be taken, but will not serve to make protestants parties to the proceedings. Any person wishing to become a party must file a motion to intervene. Copies of this filing are on file with the Commission and are available for public inspection. This filing may also be viewed on the web at *http://www.ferc.gov* using the ''RIMS'' link, select ''Docket#'' and follow the instructions (call 202–208–2222 for assistance). Comments, protests and interventions may be filed electronically via the Internet in lieu of paper. See, 18 CFR 385.2001(a)(1)(iii) and the instructions on the Commission's web site under the ''e-Filing'' link.

Linwood A. Watson, Jr.,

Acting Secretary.

[FR Doc. 01–31690 Filed 12–26–01; 8:45 am]

BILLING CODE 6717–01–P

DEPARTMENT OF ENERGY

Federal Energy Regulatory Commission

[Docket No. RP99–518–025]

PG&E Gas Transmission, Northwest Corporation; Notice of Negotiated Rates

December 19, 2001.

Take notice that on December 12, 2001, PG&E Gas Transmission, Northwest Corporation (GTN) tendered for filing as part of its FERC Gas Tariff, First Revised Volume No. 1–A, Substitute Seventeenth Revised Sheet No. 7 and Substitute Third Revised Sheet No. 7B. GTN requests that these substitute tariff sheets become effective November 1, 2001.

GTN states that these sheets are being filed to reflect the implementation of one negotiated rate agreement.

GTN further states that a copy of this filing has been served on GTN's jurisdictional customers and interested state regulatory agencies.

Any person desiring to be heard or to protest said filing should file a motion to intervene or a protest with the Federal Energy Regulatory Commission, 888 First Street, NE., Washington, DC 20426, in accordance with sections 385.214 or 385.211 of the Commission's rules and regulations. All such motions or protests must be filed in accordance with section 154.210 of the Commission's regulations. Protests will be considered by the Commission in determining the appropriate action to be taken, but will not serve to make protestants parties to the proceedings. Any person wishing to become a party must file a motion to intervene. Copies of this filing are on file with the Commission and are available for public inspection. This filing may also be viewed on the web at *http://www.ferc.gov* using the ''RIMS'' link, select ''Docket#'' and follow the instructions (call 202–208–2222 for assistance). Comments, protests and interventions may be filed electronically via the Internet in lieu of paper. See, 18 CFR 385.2001(a)(1)(iii) and the instructions on the Commission's web site under the ''e-Filing'' link.

Linwood A. Watson, Jr.,

Acting Secretary.

[FR Doc. 01–31686 Filed 12–26–01; 8:45 am]

BILLING CODE 6717–01–P

DEPARTMENT OF ENERGY

Federal Energy Regulatory Commission

[Docket No. EC02–32–000]

Texas-New Mexico Power Company; Notice of Filing

December 19, 2001.

Take notice that on December 14, 2001, Texas-New Mexico Power Company filed with the Federal Energy Regulatory Commission an application pursuant to section 203 of the Federal Power Act for authorization of a disposition of jurisdictional facilities, whereby Texas-New Mexico Power Company proposes to sell to Tri-State Transmission and Generation Cooperative Association, Inc. 7.06 circuit miles of 115 kV transmission facilities located in Hidalgo County, New Mexico. The proposed sale will be a cash sale.

Any person desiring to be heard or to protest such filing should file a motion to intervene or protest with the Federal Energy Regulatory Commission, 888 First Street, NE., Washington, DC 20426, in accordance with Rules 211 and 214 of the Commission's rules of practice and procedure (18 CFR 385.211 and 385.214). All such motions and protests should be filed on or before the comment date. Protests will be considered by the Commission to determine the appropriate action to be taken, but will not serve to make protestants parties to the proceedings. Any person wishing to become a party must file a motion to intervene. Copies of this filing are on file with the Commission and are available for public inspection. This filing may also be viewed on the Web at *http://www.ferc.gov* using the ''RIMS'' link, select ''Docket#'' and follow the instructions (call 202–208–2222 for assistance). Comments, protests and interventions may be filed electronically via the Internet in lieu of paper. See, 18 CFR 385.2001(a)(1)(iii) and the instructions on the Commission's Web site under the ''e-Filing'' link.

Comment Date: January 11, 2002.

Linwood A. Watson, Jr.,

Acting Secretary.

[FR Doc. 01–31684 Filed 12–26–01; 8:45 am]

BILLING CODE 6717–01–P

DEPARTMENT OF ENERGY

Federal Energy Regulatory Commission

[Docket No. RP02–120–000]

Transcontinental Gas Pipe Line Corporation; Notice of Tariff Filing

December 19, 2001.

Take notice that on December 11, 2001, Transcontinental Gas Pipe Line Corporation (Transco) tendered for filing as part of its FERC Gas Tariff, Third Revised Volume No. 1, certain revised tariff sheets which sheets are enumerated in Appendix A attached to the filing. The proposed effective dates of such tariff sheets are indicated on Appendix A.

Transco states that the purpose of the instant filing is to track rate changes attributable to: (1) Storage service purchased from Dominion Transmission, Inc. (Dominion) under its Rate Schedule GSS, the costs of which are included in the rates and charges payable under Transco's Rate Schedules GSS and LSS, and (2) storage service purchased from Texas Eastern Transmission Corporation (TETCO) under its Rate Schedule X–28, the costs of which are included in the rates and charges payable under Transco's Rate Schedule S–2. This filing is being made pursuant to tracking provisions under section 3 of Transco's Rate Schedule GSS, section 4 of Transco's Rate Schedule LSS and section 26 of the General Terms and Conditions of Transco's Third revised Volume No. 1 Tariff.

Transco states that included in Appendices B and C attached to the filing are the explanations of the rate changes and details regarding the computation of the revised GSS, LSS and S–2 rates.

Transco states that copies of the filing are being mailed to affected customers and interested State Commissions.

Any person desiring to be heard or to protest said filing should file a motion to intervene or a protest with the Federal Energy Regulatory Commission, 888 First Street, NE., Washington, DC 20426, in accordance with sections 385.214 or 385.211 of the Commission's rules and regulations. All such motions or protests must be filed in accordance with section 154.210 of the Commission's regulations. Protests will be considered by the Commission in determining the appropriate action to be taken, but will not serve to make protestants parties to the proceedings. Any person wishing to become a party must file a motion to intervene. Copies of this filing are on file with the

Commission and are available for public inspection. This filing may also be viewed on the web at *http://www.ferc.gov* using the ''RIMS'' link, select ''Docket#'' and follow the instructions (call 202–208–2222 for assistance). Comments, protests and interventions may be filed electronically via the Internet in lieu of paper. See, 18 CFR 385.2001(a)(1)(iii) and the instructions on the Commission's web site under the ''e-Filing'' link.

Linwood A. Watson, Jr.,

Acting Secretary.

[FR Doc. 01–31688 Filed 12–26–01; 8:45 am]

BILLING CODE 6717–01–P

DEPARTMENT OF ENERGY

Federal Energy Regulatory Commission

[Docket No. RP02–123–000]

Williams Gas Pipelines Central, Inc.; Notice of Filing of Cash-Out Report

December 19, 2001.

Take notice that on December 14, 2001, Williams Gas Pipelines Central, Inc. (Williams) tendered for filing pursuant to Article 9.8(d) of the General Terms and Conditions of its FERC Gas Tariff, its report of net revenue received from cash-outs. Williams proposes to make the refund upon Commission approval of its calculation method as set out in this report.

Williams states that pursuant to the cash-out mechanism in Article 9.8(a)(iv) of its FERC Gas Tariff, Shippers were given the option of resolving their imbalances by the end of the calendar month following the month in which the imbalance occurred by cashing-out such imbalances at 100% of the spot market price applicable to Williams as published in the first issue of Inside FERC's Gas Market Report for the month in which the imbalance occurred. Net monthly imbalances which were not resolved by the end of the second month following the month in which the imbalance occurred and which exceeded the tolerance specified in Article 9.8(b) were cashed-out at a premium or discount from the spot price according to the schedules set forth in Article 9.8(c). Williams is herewith filing its report of net revenue (sales less purchase cost) received from cash-outs.

Williams states that a copy of its filing was served on all jurisdictional customers and interested state commissions.

Any person desiring to be heard or to protest said filing should file a motion to intervene or a protest with the Federal Energy Regulatory Commission, 888 First Street, NE., Washington, DC 20426, in accordance with sections 385.214 or 385.211 of the Commission's rules and regulations. All such motions or protests must be filed on or before December 26, 2001. Protests will be considered by the Commission in determining the appropriate action to be taken, but will not serve to make protestants parties to the proceedings. Any person wishing to become a party must file a motion to intervene. Copies of this filing are on file with the Commission and are available for public inspection. This filing may also be viewed on the web at *http://www.ferc.gov* using the ''RIMS'' link, select ''Docket#'' and follow the instructions (call 202–208–2222 for assistance). Comments, protests and interventions may be filed electronically via the Internet in lieu of paper. See, 18 CFR 385.2001(a)(1)(iii) and the instructions on the Commission's web site under the ''e-Filing'' link.

Linwood A. Watson, Jr.,

Acting Secretary.

[FR Doc. 01–31691 Filed 12–26–01; 8:45 am]

BILLING CODE 6717–01–P

DEPARTMENT OF ENERGY

Federal Energy Regulatory Commission

[Docket No. RP01–39–001 and RP00–484–002]

Wyoming Interstate Company, Ltd; Notice of Compliance Filing

December 19, 2001.

Take notice that on December 12, 2001, Wyoming Interstate Company, Ltd (WIC) tendered for filing as part of its FERC Gas Tariff, Second Revised Volume No. 2, the following tariff sheets to become effective November 1, 2000:

First Revised Third Revised Sheet No. 41
First Revised Sheet No. 41A
First Revised Sheet No. 41B

WIC states that the filing is being submitted to revise its imbalance netting and trading tariff provisions and bring its tariff into compliance with the requirements of Order Nos. 587–G and 587–L.

Any person desiring to protest said filing should file a protest with the Federal Energy Regulatory Commission, 888 First Street, NE., Washington, DC 20426, in accordance with section 385.211 of the Commission's rules and regulations. All such protests must be filed in accordance with section 154.210 of the Commission's regulations. Protests will be considered by the Commission in determining the appropriate action to be taken, but will not serve to make protestants parties to the proceedings. Copies of this filing are on file with the Commission and are available for public inspection. This filing may also be viewed on the web at *http://www.ferc.gov* using the ''RIMS'' link, select ''Docket#'' and follow the instructions (call 202–208–2222 for assistance). Comments, protests and interventions may be filed electronically via the Internet in lieu of paper. See, 18 CFR 385.2001(a)(1)(iii) and the instructions on the Commission's web site under the ''e-Filing'' link.

Linwood A. Watson, Jr.,

Acting Secretary.

[FR Doc. 01–31687 Filed 12–26–01; 8:45 am]

BILLING CODE 6717–01–P

FEDERAL DEPOSIT INSURANCE CORPORATION

Notice of Agency Meeting; Sunshine Act

Pursuant to the provisions of the ''Government in the Sunshine Act'' (5 U.S.C. 552b), notice is hereby given that at 1:20 p.m. on Thursday, December 20, 2001, the Board of Directors of the Federal Deposit Insurance Corporation met in closed session to consider matters relating to the Corporation's corporate, supervisory, and resolution activities.

In calling the meeting, the Board determined, on motion of Director John M. Reich (Appointive), seconded by Director John D. Hawke, Jr. (Comptroller of the Currency), concurred in by Director James E. Gilleran (Director, Office of Thrift Supervision), and Chairman Donald E. Powell, that Corporation business required its consideration of the matters on less than seven days' notice to the public; that no earlier notice of the meeting was practicable; that the public interest did not require consideration of the matters in a meeting open to public observation; and that the matters could be considered in a closed meeting by authority of subsections (c)(2), (c)(4), (c)(6), (c)(8), (c)(9)(A)(ii), and (c)(9)(B) of the Government in the Sunshine Act, (5 U.S.C. 552b(c)(2), (c)(4), (c)(6), (c)(8), (c)(9)(A)(ii), and (c)(9)(B)).

The meeting was held in the Board Room of the FDIC Building located at 550—17th Street, NW., Washington, DC.

Dated: December 21, 2001.

Federal Deposit Insurance Corporation.

James D. LaPierre,

Deputy Executive Secretary.

[FR Doc. 01–31954 Filed 12–21–01; 1:07 pm]

BILLING CODE 6714–01–M

FEDERAL EMERGENCY MANAGEMENT AGENCY

Fee for Services To Support FEMA's Offsite Radiological Emergency Preparedness (REP) Program

AGENCY: Federal Emergency Management Agency (FEMA).

ACTION: Notice.

SUMMARY: In accordance with regulations FEMA has established a Fiscal Year (FY) 2002 hourly rate of $36.71 for assessing and collecting fees from Nuclear Regulatory Commission (NRC) licensees for services provided by FEMA personnel for FEMA's REP Program.

DATES: This user fee hourly rate is effective for FY 2002 (October 1, 2001, to September 30, 2002).

FOR FURTHER INFORMATION CONTACT: Mr. Russell Salter, Division Director, Technological Hazards Division, Readiness, Response, and Recovery Directorate, Federal Emergency Management Agency, 500 C Street SW., Washington, DC 20472, (202) 646–3030 (phone), or (email) russ.salter@fema.gov.

SUPPLEMENTARY INFORMATION: As authorized by Public Law 105–276, 112 Stat. 2461, FEMA we will charge an hourly user fee rate of $36.71 to NRC licensees of commercial nuclear power plants for all REP Program site-specific related services provided by FEMA personnel as described in 44 CFR Part 354. FEMA will deposit these funds in the REP Program Fund to offset the actual costs by FEMA for its REP Program.

FEMA established the hourly rate on the basis of the methodology set forth in 44 CFR 354.4(b), ''Determination of site-specific biennial exercise related component for FEMA personnel,'' and will use the rate to assess and collect fees for site-specific biennial exercise related services rendered by FEMA personnel. This hourly rate only addresses charges to NRC licensees for services that FEMA personnel provide under the site-specific component, not charges for services FEMA personnel provide under the flat fee component referenced at 44 CFR 354.4(d), nor for services that FEMA contractors provide. We will charge for FEMA contractors' services in accordance with 44 CFR 354.4(c) and (d) for the recovery of appropriated funds obligated for the Emergency Management Planning and Assistance (EMPA) portion of FEMA's REP Program budget.

Kenneth S. Kasprisin,

Assistant Director, Readiness, Response and Recovery Directorate.

[FR Doc. 01–31702 Filed 12–26–01; 8:45 am]

BILLING CODE 6718–06–P

FEDERAL RESERVE SYSTEM

Formations of, Acquisitions by, and Mergers of Bank Holding Companies

The companies listed in this notice have applied to the Board for approval, pursuant to the Bank Holding Company Act of 1956 (12 U.S.C. 1841 *et seq.*) (BHC Act), Regulation Y (12 CFR Part 225), and all other applicable statutes and regulations to become a bank holding company and/or to acquire the assets or the ownership of, control of, or the power to vote shares of a bank or bank holding company and all of the banks and nonbanking companies owned by the bank holding company, including the companies listed below.

The applications listed below, as well as other related filings required by the Board, are available for immediate inspection at the Federal Reserve Bank indicated. The application also will be available for inspection at the offices of the Board of Governors. Interested persons may express their views in writing on the standards enumerated in the BHC Act (12 U.S.C. 1842(c)). If the proposal also involves the acquisition of a nonbanking company, the review also includes whether the acquisition of the nonbanking company complies with the standards in section 4 of the BHC Act (12 U.S.C. 1843). Unless otherwise noted, nonbanking activities will be conducted throughout the United States. Additional information on all bank holding companies may be obtained from the National Information Center website at www.ffiec.gov/nic/.

Unless otherwise noted, comments regarding each of these applications must be received at the Reserve Bank indicated or the offices of the Board of Governors not later than January 18, 2002.

A. Federal Reserve Bank of Cleveland (Stephen J. Ong, Vice President) 1455 East Sixth Street, Cleveland, Ohio 44101–2566:

1. Signature Bancorp, Inc., Toledo, Ohio; to become a bank holding company by acquiring 100 percent of the voting shares of Signature Bank, National Association, Toledo, Ohio (in formation).

B. Federal Reserve Bank of Chicago (Phillip Jackson, Applications Officer) 230 South LaSalle Street, Chicago, Illinois 60690–1414:

1. Macatawa Bank Corporation, Holland, Michigan; to merge with Grand Bank Financial Corporation, Grand Rapids, Michigan, and thereby indirectly acquire Grand Bank, Grand Rapids, Michigan.

2. Marshall & Ilsley Corporation, Milwaukee, Wisconsin; to merge with Richfield State Agency, Inc., Richfield, Minnesota, and thereby indirectly acquire Richfield Bank & Trust Company, Richfield, Minnesota.

C. Federal Reserve Bank of Minneapolis (JoAnne F. Lewellen, Assistant Vice President) 90 Hennepin Avenue, Minneapolis, Minnesota 55480–0291:

1. Northern Plains Investment, Inc., Jamestown, North Dakota; to retain an additional 1.68 percent, for a total of 45.01 percent, of the voting shares of North Star Holding Company, Inc., Jamestown, North Dakota, and thereby indirectly retain additional voting shares of Stutsman County State Bank, Jamestown, North Dakota.

2. Odin Bancshares, Inc., Odin, Minnesota; to become a bank holding company by acquiring 100 percent of the voting shares of Odin State Bank, Odin, Minnesota.

Board of Governors of the Federal Reserve System, December 19, 2001.

Robert deV. Frierson,

Deputy Secretary of the Board.

[FR Doc. 01–31695 Filed 12–26–01; 8:45 am]

BILLING CODE 6210–01–S

FEDERAL TRADE COMMISSION

[File No. 011 0057]

Diageo plc, et al.; Analysis to Aid Public Comment

AGENCY: Federal Trade Commission

ACTION: Proposed Consent Agreement.

SUMMARY: The consent agreement in this matter settles alleged violations of federal law prohibiting unfair or deceptive acts or practices or unfair methods of competition. The attached Analysis to Aid Public Comment describes both the allegations in the draft complaint that accompanies the consent agreement and the terms of the consent order—embodied in the consent agreement—that would settle these allegations.

DATES: Comments must be received on or before January 21, 2002.

ADDRESSES: Comments filed in paper form should be directed to: FTC/Office

of the Secretary, Room 159–H, 600 Pennsylvania Avenue, N.W., Washington, D.C. 20580. Comments filed in electronic form should be directed to: *consentagreement@ftc.gov,* as prescribed below.

FOR FURTHER INFORMATION CONTACT: Joseph Brownman, FTC, Bureau of Competition, 600 Pennsylvania Avenue, N.W., Washington, D.C. 20580, (202) 326–2605.

SUPPLEMENTARY INFORMATION: Pursuant to Section 6(f) of the Federal Trade Commission Act, 38 Stat. 721, 15 U.S.C. 46(f), and Section 2.34 of the Commission's Rules of Practice, 16 CFR 2.34, notice is hereby given that the above-captioned consent agreement containing a consent order to ceas4e and desist, having been filed with and accepted, subject to final approval, by the Commission, has been placed on the public record for a period of thirty (30) days. The following Analysis to Aid Public Comment describes the terms of the consent agreement, and the allegations in the complaint. An electronic copy of the full text of the consent agreement package can be obtained from the FTC Home Page (for December 19, 2001), on the World Wide Web, at *http://www.ftc.gov/os/2001/12/index.htm.* A paper copy can be obtained from the FTC Public Reference Room, Room 130–H, 600 Pennsylvania Avenue, N.W., Washington, D.C. 20580, either in person or by calling (202) 326–2222.

Public comments are invited, and may be filed with the Commission in either paper or electronic form. Comments filed in paper form should be directed to: FTC/Office of the Secretary, Room 159–H, 600 Pennsylvania Avenue, N.W., Washington, D.C. 20580. If a comment contains nonpublic information, it must be filed in paper form, and the first page of the document must be clearly labeled ''confidential.'' Comments that do not contain any nonpublic information may instead be filed in electronic form (in ASCII format, WordPerfect, or Microsoft Word) as part of or as an attachment to email messages directed to the following email box: *consentagreement@ftc.gov.* Such comments will be considered by the Commission and will be available for inspection and copying at its principal office in accordance with Section 4.9(b)(6)(ii) of the Commission's Rules of Practice, 16 CFR 4.9(b)(6)(ii)).

II. The Parties and the Transaction

Proposed Respondent Diageo is a public limited company organized, existing and doing business under and by virtue of the laws of the United Kingdom with its office and principal place of business located at 8 Henrietta Place, London, England W1A 9AG. In the United States Diageo's operates a distilled spirits business through a wholly-owned subsidiary corporation, GuinnessUDV North America, Inc., whose offices are located at Six Landmark, Square, Stamford, Connecticut 06901.

Proposed Respondent Vivendi is a societe anonyme organized, existing and doing business under and by virtue of the laws of France, with its office and principal place of business located at 42, avenue de Friedland, 75380 Paris Cedex 08, France. In the United States, Respondent Vivendi operates a distilled spirits business through Joseph E. Seagram & Sons, Inc., a wholly-owned subsidiary corporation whose offices are located at 375 Park Avenue, New York, New York 10152–0192.

Third party Pernod Ricard is a societe anonyme organized, existing and doing business under any by virtue of the laws of France, with its office and principal place of business located at 142 Boulevard Haussmann, 75379 Paris, France. In the United States, Pernod Ricard operates a distilled spirits business through Austin, Nichols & Co., Inc., a wholly-owned subsidiary corporation whose offices are located at 156 East 46th Street, New York, New York.

On December 19, 2000, Diageo, Pernod Ricard, and Vivendi entered into an agreement for Diageo and Pernod Ricard jointly to acquire Seagram. The value of the transaction is $8.15 billion. Diageo and Pernod Ricard had previously agreed that if their joint bid to acquire Seagram were successful, they would split the Seagram assets between them. Under their Framework Agreement, Diageo would pay $5 billion for its share of the Seagram assets and Pernod Ricard would pay $3.15 for the remaining share of Seagram.

Among the distilled spirits brands that Diageo and Pernod Ricard agreed would be acquired and held by Diageo were Captain Morgan Original Spiced Rum and Captain Morgan's Parrot Bay Rum. Among the distilled spirits brands that Diageo and Pernod Ricard agreed would be acquired and held by Pernod Ricard were Seagram's Gin, Chivas Regal Scotch, the Glenlivet Scotch, and Martell Cognac.

Under the terms of the proposed transaction, Pernod Ricard will acquire Seagram's Gin, Chivas Regal Scotch, the Glenlivet Scotch, and Martell Cognac brands. These are brands that Diageo should not acquire because doing so would be anticompetitive. Also, Diageo will acquire Joseph E. Seagram & Sons, Inc., which is the Vivendi entity responsible for marketing all the Seagram-owned brands in the United States. For this reason, commercially sensitive information about Segram's Gin, Chivas Regal Scotch, the Glenlivet Scotch, and Martell Cognac—information that Diageo should not acquire for competitive reasons—could remain with Joseph E. Seagram & Sons, Inc. and wind up in Diageo's possession.

Also, under the terms of the proposed transaction, Diageo will continue to operate, for up to one year, a ''back office'' administrative operation for Pernod Ricard in connection with the Seagram brands that Pernod Ricard will be acquiring, Here too, as the transaction was originally structured by the parties, Diageo could acquire and learn commercially sensitive information about Seagram's Gin, Chivas Regal Scotch, the Glenlivet Scotch, and Martell Cognac. The proposed transaction also provides that for up to one year, under a co-packing arrangement, Diageo will bottle for Pernod some of the Seagram's Gin and Scotch products sold in the United States.

III. The Proposed Complaint

According to the Draft Complaint that the Commission intends to issue, Diageo and Vivendi compete in the United States in connection with the distribution and sale of the following distilled spirits markets: (a) Premium rum, (b) popular gin, (c) deluxe Scotch, (d) single malt Scotch, and (e) Cognac.

The Commission is concerned that the proposed transaction would eliminate substantial competition between Diageo and Vivendi in each relevant market, and result in higher prices. The Commission stated it has reason to believe that the proposed transaction would have anticompetitive effects and violate Section 7 of the Clayton Act and Section 5 of the Federal Trade Commission Act.

IV. The Commission's Competitive Concerns

A. Premium Rum

Total United States sales at retail of all premium rum products are about $1 billion. In this market, Bacardi USA, with its Bacardi Light and Bacardi Limon products, is the largest competitor with about a 54% share, Seagram, with its Captain Morgan Original Spiced Rum and Captain Morgan's Parrot Bay Rum products, has about a 33% share, and Diageo, with its Malibu Rum, has about an 8% share. After the proposed acquisition, Diageo and Bacardi USA together would have

a combined market share of about 95% in the premium rum market in the United States. The proposed acquisition will increase the Herfindahl-Hirschman Index (''HHI'') (the customary measure of market concentration) in the premium rum market by about 500 points, and result in market concentration of about 4600 points.

B. Popular Gin

Total United States sales of all popular gin products at retail are about $650 million. In this market, Diageo, through its ownership and marketing of Gordon's Gin (and interest in Gilbey's Gin), is the nation's second largest competitor, with about a 34% share, and Vivendi, through its ownership and marketing of Seagram's Gin (and interest in Burnett's White Satin Gin), is the nation's largest competitor, with about a 66% share. After the proposed transaction, Diageo will have access to highly sensitive commercial business information about Seagram's Gin, its principal competitor. Were Diageo actually to acquire Seagram's Gin, it would have a market share of (or have a financial interest in) close to 100% of the popular gin market in the Untied States. Such an acquisition would increase the HHI by about 4500 points, and result in market concentration of about 10,000 points.

C. Deluxe Scotch

Total United States sales of all deluxe Scotch products at retail are about $450 million. In this market, Diageo, with its Johnnie Walker Black Scotch, is the nation's largest competitor, with about a 51% share, and Vivendi, with its Chivas Regal Scotch, is the nation's second largest competitor, with about a 49% share. After the proposed transaction, Diageo will have access to highly sensitive commercial business information about Chivas Regal Scotch, its principal competitor. Were Diageo actually to acquire Chivas Regal Scotch, it would have a market share of close to 100% of the deluxe Scotch market in the United States. Such an acquisition would increase the HHI by about 5,000 points, and result in market concentration of about 10,000 points.

D. Single Malt Scotch

Total United States sales of all single malt Scotch products at retail are about $250 million. In this market, Diageo, with its Oban, Lagavulin, Dalwhinnie, Cardhu, Talisker, Cragganmore, Knocando, Glenkinchie, and Glen Ord brands, is the nation's fourth largest competitor, with about a 6% share, and Vivendi, with it's The Glenlivet Scotch product, is the nation's largest competitor with about a 26% share. After the proposed transaction, Diageo will have access to highly sensitive commercial business information about The Glenlivet Scotch. Were Diageo actually to acquire The Glenlivet Scotch, it would have a market share of about 32% in the single malt Scotch market in the United States. Such an acquisition would increase the HHI by about 300 points, and result in market concentration of about 2,000 points.

E. Cognac

Total United States sales of all Cognac products at retail are about $1 billion. In this market, Diageo, with its Hennessy brand, is the largest competitor with about a 54% share, and Vivendi, with its Martell product, is the third largest competitor with about a 9% share. After the proposed transaction, Diageo will have access to highly sensitive commercial business information about Martell Cognac. Were Diageo actually to acquire Martell Cognac, it would have a market share of about 63% of the Cognac market in the United States. Such an acquisition would increase the HHI by about 900 points, and result in market concentration of about 4,600 points.

V. The Proposed Consent Order

A. The premium rum market

The Proposed Consent Order, if finally issued by the Commission, would settle all of the charges alleged in the Commission's Draft Complaint. Under the terms of the Proposed Consent Order, Diageo will be required to divest its Malibu rum business, worldwide, to an acquirer that is acceptable to the Commission.

Diageo will be required to complete the mandated divestiture within six (6) months from the date it (together with Pernod) acquires Seagram. In the event that Diageo does not complete the required divestiture in the time allowed, the Commission will appoint a trustee to sell the assets. The Proposed Consent Order empowers the trustee to sell such additional assets as may be necessary to assure the marketability, viability, and competitiveness of the businesses that are required to be divested. Pending Diageo's divestiture of the Malibu rum business to a Commission-approved acquirer, and to prevent competitive harm pending the divestiture and to ensure that the assets required to be divested will remain a competitively viable business, the Commission has appointed Theodore F. Martens of PricewaterhouseCoopers LLP as an interim monitor. Among other things, the monitor will ensure that during the period of time that Diageo will own both the Malibu and Captain Morgan rum businesses, it will manage them separately.

B. The popular Gin, deluxe Scotch, single malt Scotch, and Cognac markets

Under the terms of the Proposed Consent Order, Diageo will be prevented from obtaining or using any commercially sensitive business information relating to Seagram's Gin, Chivas Regal Scotch, The Glenlivet Scotch, or Martell Cognac. To ensure that this will not occur, Diageo has agreed to the following procedures.:

First, to ensure that Diageo will not acquire pre-existing competitively sensitive information about Seagram's Gin, Chivas Regal Scotch, The Glenlivet Scotch, and Martell Cognac, Vivendi will hire an independent consultant to identify and segregate those materials. This will prevent Diageo from seeing the competitively sensitive business information in the materials that Diageo will be acquiring.

Second, Diageo will implement a series of firewalls to keep confidential information from the back office operation it will be operating in part for the benefit of Pernod, or confidential information that Diageo will learn because of its co-packing arrangement, from getting into the hands of Diageo marketing personnel.

C. The Order To Hold Separate and Maintain Assets

Accompanying the Proposed Consent Order is an Order to Hold Separate and Maintain Assets. This order requires Diageo to preserve and maintain the Seagram Captain Morgan rum assets as a separate competitive entity pending the divestiture of the Malibu assets. This will ensure that there will be no interim harm to competition pending the divestiture by Diageo of the Malibu assets during the period (maximum of six months) that Diageo will be the owner of both Malibu Rum and Captain Morgan Rum.

The Order to Hold Separate and Maintain Assets also requires Diageo to preserve and maintain the competitive viability of the Malibu assets, pending their divestiture. This will ensure that the competitive value of these assets will be maintained after Diageo acquires the Seagram rum assets but before the Malibu Rum assets are actually divested.

VI. The Opportunity for Public Comment

The Proposed Consent Order has been placed on the public record for thirty (30) days for receipt of comments from

interested persons. Comments received during this period will become part of the public record. After thirty (30) days, the Commission will again review the agreement and the comments received, and will decide whether it should withdraw from the agreement or make final the Consent Order in the agreement.

By accepting the Proposed Consent Order subject to final approval, the Commission anticipates that the competitive problems alleged in the Draft Complaint will be resolved. The purpose of this analysis is to invite and facilitate public comment concerning the Proposed Consent Order. It is not intended to constitute an official interpretation of the Proposed Consent Order, nor is it intended to modify the terms of the orders in any way.

By direction of the Commission.

Donald S. Clark,

Secretary.

[FR Doc. 01–31778 Filed 12–26–01; 8:45 am]

BILLING CODE 6750–01–M

FEDERAL TRADE COMMISSION

[File No. 011 0141]

Valero Energy Corporation, et al.; Analysis to Aid Public Comment

AGENCY: Federal Trade Commission.

ACTION: Proposed Consent Agreement.

SUMMARY: The consent agreement in this matter settles alleged violations of federal law prohibiting unfair or deceptive acts or practices or unfair methods of competition. The attached Analysis to Aid Public Comment describes both the allegations in the draft complaint that accompanies the consent agreement and the terms of the consent order—embodied in the consent agreement—that would settle these allegations.

DATES: Comments must be received on or before January 18, 2002.

ADDRESSES: Comments filed in paper form should be directed to: FTC/Office of the Secretary, Room 159–H, 600 Pennsylvania Avenue, N.W., Washington, D.C. 20580. Comments filed in electronic form should be directed to: *consent agreement@ftc.gov,* as prescribed below.

FOR FURTHER INFORMATION CONTACT: Peter Richman, FTC, Bureau of Competition, 600 Pennsylvania Avenue, N.W., Washington, D.C. 20580, (202) 326–2563.

SUPPLEMENTARY INFORMATION: Pursuant to Section 6(f) of the Federal Trade Commission Act, 38 Stat, 721, 15 U.S.C. 46(f), and Section 2.34 of the Commission's Rules of Practice, 16 CFR 2.34, notice is hereby given that the above-captioned consent agreement containing a consent order to cease and desist, having been filed with and accepted, subject to final approval, by the Commission, has been placed on the public record for a period of thirty (30) days. The following Analysis to Aid Public Comment describes the terms of the consent agreement, and the allegations in the complaint. An electronic copy of the full text of the consent agreement package can be obtained from the FTC Home Page (for December 18, 2001), on the World Wide Web, at *http://www.ftc.gov/os/2001/12/index.htm.* A paper copy can be obtained from the FTC Public Reference Room, Room 130–H, 600 Pennsylvania Avenue, N.W., Washington, D.C. 20580, either in person or by calling (202) 326–2222.

Public comments are invited, and may be filed with the Commission in either paper or electronic form. Comments filed in paper form should be directed to: FTC/Office of the Secretary, Room 159–H, 600 Pennsylvania Avenue, N.W., Washington, D.C. 20580. If a comment contains nonpublic information, it must be filed in paper form, and the first page of the document must be clearly labeled ''condfidential.'' Comments that do not contain any nonpublic information may instead be filed in electronic form (in ASCII format, WordPerfect, or Microsoft Word) as part of or as an attachment to email messages directed to the following email box: *consent agreement@ftc.gov.* Such comments will be considered by the Commission and will be available for inspection and copying at its principal office in accordance with Section 4.9(b)(6)(ii) of the Commission's Rules of Practice, 16 CFR 4.9(b)(6)(ii)).

Analysis of Proposed Consent Order to aid Public Comment

I. Introduction

The Federal Trade Commission (''Commission'' or ''FTC'') has issued a complaint (''Complaint'') alleging that the proposed merger of Valero Energy Corporation (''Valero'') and Ultramar Diamond Shamrock Corporation Corporation (''Ultramar'') (collectively ''Respondents'') would violate Section 7 of the Clayton Act, as amended, 15 U.S.C. 18, and Section 5 of the Federal Trade Commission Act, as amended, 15 U.S.C. 45, and has entered into an agreement containing consent orders (''Agreement Containing Consent Orders'') pursuant to which Respondents agree to be bound by a proposed consent order that requires divestiture of certain assets (''Proposed Consent Order'') and a hold separate order that requires Respondents to hold separate and maintain certain assets pending divestiture (''Hold Separate Order''). The Proposed Order remedies the likely anticompetitive effects arising from Respondent's proposed merger, as alleged in the Complaint. The Hold Separate Order preserve competition pending divestiture.

II. Description of the Parties and the Transaction

Valero, headquartered in San Antonio, Texas, is an independent domestic refining company. Valero is engaged in national refining, transportation, and marketing of petroleum products and related petrochemical products. Valero reported 2000 net income of $611 million on revenues of nearly $15 billion. Valero's revenues are generated almost exclusively in the United States from seven fuel refineries.

Ultramar is an independent North American refining and marketing company also headquartered in San Antonio, Texas. It is primarily engaged in the refining, marketing and transportation of petroleum products and petrochemicals. Ultramar reported 2000 net earnings of $444 million on operating of $17.1 billion. Ultramar operates seven refineries in the United States and Canada with a total throughput of 850,000 barrels per day, marketed through a network of over 5,000 branded retail stations.

Pursuant to and agreement an plan of merger dated May 6, 2001, Valero proposed to merge with Ultramar in a transaction valued at approximately $6 billion. Valero intends to acquire 100% of the voting stock of Ultramar. As a result of the merger, Valero will be one of the largest refiners in the United States.

III. The Investigation and the Compliant

The Complaint alleges that the merger of Valero and Ultramar would violate Section 7 of the Clayton Act, as amended, 15 U.S.C. 18, and Section 5 of the Federal Trade Commission Act, as amended, 15 U.S.C. 45, by substantially lessening competition in each of the following markets: (1) the refining and bulk supply of CARB 2 and CARD 3 gasoline for sale in Northern California; and (2) the refining and bulk supply of CARB 2 and CARB 3 gasoline in the State of California.

To remedy the alleged anticompetitive effects of the merger, the Proposed Order requires Respondents to divest the Ultramar Golden Eagle refinery located in Avon,

California. Along with refinery assets, Respondents will divest bulk gasoline supply contracts and 70 Ultramar Northern California retail service stations. This will assure the new entrant a consistent CARB gasoline demand to assure that the entrant possesses the same incentives to produce CARB gasoline that Ultramar had pre-merger.

The Commission's decision to issue the Complaint and enter into the Agreement Containing Consent Orders was made after an extensive investigation in which the Commission examined competition and the likely effects of the merger in the markets alleged in the Complaint and in several other markets, including markets for asphalt refining and pipeline transportation, and terminaling or marketing of gasoline or other fuels in sections of the country other than those alleged in the Complaint. The Commission has concluded that the merger is unlikely to reduce competition significantly in markets other than those alleged in the Complaint.

The Commission conducted the investigation leading to the Complaint in collaboration with the Attorneys General of the States of California and Oregon. As part of this joint effort, Respondents have entered into State Decrees with these States settling charges that the merger would violate both state and federal antitrust laws.

The Complaint alleges that the merger would violate the antitrust laws in four product and geographic markets, each of which is discussed below. The analysis applied in each market generally follows the analysis set forth in the FTC and U.S. Dep't of Justice Horizontal Merger Guidelines (1997) (''Merger Guidelines'').

Count I—Refining Bulk Supply of CARB 2 and CARB 3 Gasoline for Sale in Northern California

Valero and Ultramar compete in the refining and bulk supply of CARB gasoline for sale in Northern California.[1] Refining and bulk supply of CARB 2 and CARB 3 gasoline are relevant products markets. CARB gasoline meets the specifications of the California Air Resources Board (''CARB''). CARB 2 automotive gasoline meets the current Phase 2 specifications in effect since 1996 and is the only gasoline that can be sold to California gasoline consumers. CARB 3 automotive gasoline meets the proposed Phase 3 specifications that are scheduled to go into effect on January 1, 2003. After that date, CARB 3 will be the only gasoline that can be sold to California gasoline consumers. Thus, there are no substitutes for CARB 2 gasoline today and there will be no substitutes for CARB 3 gasoline. In the current investigation and in past decisions, the Commission concluded that the refining and bulk supply of CARB 2 gasoline is a relevant market.[2]

The North Coast (Northern California and Northwest refineries) constitutes a relevant geographic market for the refining and bulk supply of CARB 2 and CARB 3 gasoline for sale in Northern California. The North Coast refiners can profitably raise prices in Northern California by a small but significant and nontransitory amount without losing significant sales to other bulk suppliers. Five California refiners (Chevron Texaco (Chevron), Equilon (Shell/Texaco), Phillips (Tosco), Ultramar, and Valero) supply more than 94% of the CARB gasoline consumed in Northern California; Kern Oil (Bakersfield, California) and Tesoro (Anacortes, Washington) supply virtually all the remainder during normal market operations. The next closest refineries, located in the Los Angeles area, are unlikely to supply CARB gasoline to Northern California in response to a small but significant and nontransitory increase in price because of the transportation costs to ship from Southern California.

The North Coast market would be highly concentrated following the proposed merger.[3] Based on current CARB refining capacity, the proposed merger would increase concentration for the refining of CARB 2 gasoline by Northern California and Northwest refineries by more than 750 points to an HHI level above 2,700. Based on forecasted CARB 3 refining capacity, the proposed merger would increase concentration for the refining and bulk supply of CARB 3 gasoline by Northern California and Northwest refineries by more than 1,050 points to an HHI level above 3,050.

Entry is difficult and would not be timely, likely, or sufficient to prevent anticompetitive effects arising from the proposed merger. Building a new refinery is extremely unlikely due to the severe environmental constraints and substantial sunk costs. Imports of CARB gasoline from outside California are unlikely because of substantial import barriers, including (1) geographic isolation from potential outside sources; (2) cost and difficulty of producing CARB gasoline; (3) lack of potential customers because of the extensive integration of refining and marketing that has eliminated most independent gasoline marketers and retailers; and (4) price risk stemming from spot market volatility in Northern California.

The efficiency claims of the Respondents, to the extent they relate to these markets, are not cognizable under the Merger Guidelines, are small compared to the magnitude of the potential harm, and would not restore the competition lost by the merger even if the efficiencies were achieved.

The Complaint charges that the proposed merger would likely substantially reduce competition in refining the bulk supply of CARB gasoline for sale in Northern California, thereby increasing wholesale prices of CARB gasoline by (1) eliminating direct competition between Valero and Ultramar; (2) increasing the likelihood that the combined company will unilaterally raise prices, and (3) increasing the ability and likelihood of coordinated interaction between the combined company and its competitors in Northern California. The proposed merger would create a highly concentrated market in Northern California. The combined company would control between 40 and 45% of CARB gasoline refining capacity in Northern California. Under the Merger Guidelines, these figures trigger a presumption that ''the merger will create or enhance market power or facilities its exercise * * *'' Merger Guidelines § 1.51(c). These anticompetitive effects could result either from unilateral action by the combined firm or from coordinated interaction among the remaining refiners. Valero's post-merger market share supports a presumption under the Merger Guidelines that it would have the ability and incentive to unilaterally reduce supply in Northern California and raise prices. It could do this in a variety of ways, including reducing or eliminating capacity expansions at the Bay Area refineries, running the refineries at below capacity, or exporting gasoline out of the market.

The merger increases the likelihood of coordinate interaction in Northern California by reducing the number of

[1] A bulk supply market consists of firms that have the ability to deliver large quantities of gasoline on a regular and continuing basis, such as pipelines or local refineries.

[2] *Shell Oil Co.,* C–3803 (1998); *Exxon,* C–3907 (2000); (*Chevron*), C–4023 (Proposed Order 2001).

[3] The Commission measures market concentration using the Herfindahl-Hirschman Index (''HHI''), which is calculated as the sum to the squares of the shares of all firms in the market. FTC and Department of Justice Horizontal Merger Guidelines (''Merger Guidelines'') § 1.5. Markets with HHIs between 1000 and 1800 are deemed ''moderately concentrated,'' and markets with HHIs exceeding 1800 are deemed ''highly concentrated.'' Merger Guidelines § 1.51.

significant refiners in the market from five to four. The market exhibits characteristics that are conducive to coordinated interaction, including (1) homogenous product; (2) small number of market participants; (3) high concentration; (4) recognition by participants that individual output decisions impact the market; (5) difficult entry conditions that insulate the market from outside supply; (6) vertical integration that eliminates potential low-cost competitors and creates a finite and identifiable collusive group; and (7) industry practices and conditions that allow the collusive group to easily detect and punish cheating on the tacit agreement.

The merger could raise the costs of CARB gasoline to Northern California consumers substantially; even a one cent per gallon price increase would cost Northern California consumers more than $60 million annually. To remedy the harm, the Proposed Order requires the Respondents to divest Ultramar's Golden Eagle refinery, which refines CARB gasoline, and 70 Ultramar retail service stations supplied from the Golden Eagle refinery, as described more fully below. This divestiture will eliminate the refining and bulk supply overlap in the North Coast market otherwise presented by this merger.

Count II—Refining and Bulk Supply of CARB Phase 2 and CARB Phase 3 Gasoline for Sale in California

Valero and Ultramar compete in refining and bulk supply of CARB gasoline for sale in California. As explained in Count I, only CARB gasoline can be sold legally in California. Refining and bulk supply of CARB 2 and CARB 3 gasoline are relevant product markets.

The West Coast constitutes a relevant antitrust geographic market for refining and bulk supply of CARB 2 and CARB 3 gasoline for sale in California. The West Coast refiners can profitably raise prices by a small but significant and nontransitory amount without losing significant sales to other refiners. Seven California refiners (BP (Arco), Chevron Texaco (Chevron), Equilon (Shell/Texaco), ExxonMobil, Phillips (Tosco), Ultramar, and Valero) supply more than 97% of the CARB gasoline consumed in California; Kern Oil (Bakersfield, California) and Tesoro (Anacortes, Washington) supply virtually all the remainder during normal market operations.

The seven refiner-marketers also account for more than 95% if retail gasoline sales in California through their branded retail stations. One effect of the close integration between refining and marketing in California is that refiners outside the West Coast cannot easily find outlets for imported cargoes of CARB gasoline, since nearly all the outlets are controlled by incumbent refiner-marketers. Likewise, the extensive integration of refining, marketing and bulk storage makes it more difficult for the few non-integrated marketers to turn to imports as a source of supply, since the few remaining independent marketers lack the scale to import cargoes economically and thus must rely on California refiners for their usual supply.

Other than the California refineries and one Washington refinery, no other refineries regularly produce CARB gasoline in significant quantities. The next closest refineries, located in the U.S. Virgin Islands, Texas and Louisiana, do not supply CARB gasoline to California except during significant price spikes caused by supply disruptions at California refineries. These refineries are unlikely to supply CARB gasoline to California except during significant price spikes caused by supply disruptions at California refineries. These refineries are unlikely to supply CARB gasoline to California in response to a small but significant and nontransitory increase in price due to (1) transportation costs from other refineries; (2) limited access to marine and bulk storage facilities; (3) lack of potential customers because of the extensive integration of refining and marketing that has eliminated most independent gasoline marketers and retailers; and (4) price risk stemming from spot market volatility in California.

The West Coast market for the refining and bulk supply of CARB 2 gasoline would be at the upper end of the moderately concentrated range following the proposed merger. Based on current refining capacity, the proposed merger would increase concentration for the refining of CARB 2 gasoline by California and Washington refineries by more than 325 points to an HHI level above 1,750. Based on forecasted CARB 3 refining capacity, the proposed merger would result in a highly concentrated market, increasing concentration for the refining and bulk supply of CARB 3 gasoline by California and Washington refineries by more than 390 points to an HHI level above 1,850.

Entry is difficult and would not be timely, likely, or sufficient to prevent anticompetitive effects arising from the proposed merger. Building a new refinery is unlikely due to the severe environmental constraints and substantial sunk costs. Imports of CARB gasoline from outside California are unlikely because of the substantial import barriers listed above.

The efficiency claims of the Respondents, to the extent they relate to these markets, are not cognizable under the Merger Guidelines, are small compared to the magnitude of the potential harm, and would not restore the competition lost by the merger even if the efficiencies were achieved.

The Complaint charges that the proposed merger would likely reduce competition in refining and bulk supply of CARB gasoline for sale in California, thereby increasing wholesale prices of CARB gasoline by (1) eliminating direct competition between Valero and Ultramar; and (2) increasing the ability and likelihood of coordinated interaction between the combined company and its competitors in California. This market exhibits the same characteristics conducive to coordinated interaction identified in Count I. The proposed merger reduces the number of CARB gasoline refiners in California and increases concentration, thereby increasing the likelihood of coordination.

The merger could raise the costs of CARB gasoline to all California consumers substantially; even a one cent per gallon price increase would cost California consumers more than $150 million annually. To remedy the harm, the Proposed Order requires the Respondents to divest the refining and marketing assets identified above in Count I. This divestiture will eliminate the refining and bulk supply overlap in the West Coast market otherwise presented by this merger.

IV. Resolution of the Competitive Concerns

A. CARB Gasoline Refining and Bulk Supply

The Commission has provisionally entered into the Agreement Containing Consent Orders with Valero and Ultramar in settlement of the Complaint. The Agreement Containing Consent Orders contemplates that the Commission would issue the Complaint and enter the Proposed Order and the Hold Separate Order for the divestiture of certain assets described below. The Commission will appoint R. Shermer & Company, Inc. as the hold separate trustee.

To remedy the lessening of competition in refining and bulk supply of CARB 2 and CARB 3 gasoline alleged in Counts I and II of the Complaint, Paragraph II of the Proposed Order requires Respondents to divest Ultramar's Golden Eagle refinery and 70 Ultramar-owned and operated gas

stations supplied from the Golden Eagle refinery to an acquirer approved by the Commission. (¶ II.A.) The retail divestiture is ordered to maintain the likelihood that the owner of the Golden Eagle refinery will have incentives to produce CARB gasoline and other petroleum products equivalent to Ultramar's pre-merger incentives. The divestiture of Ultramar's Golden Eagle refinery, with associated Ultramar retail assets, will not significantly reduce the amount of gasoline available to non-integrated marketers, since the refinery will likely continue to produce CARB gasoline and other products and will need outlets for its sale.

Divestiture of the Golden Eagle refinery will effectively restore the competitive status quo ante in both markets. Valero and Ultramar are the only major refiners in California with excess capacity above their direct marketing needs. This excess (or ''swing'') capacity helps to dampen price spikes during shortages resulting from refinery shutdowns. Elimination of this swing production would lead to greater and longer price spikes during refinery outages. The divestiture will eliminate the combined company's ability and incentive to unilaterally reduce production and raise prices. In addition, Valero and Ultramar are the primary suppliers of unbranded wholesale gasoline to independent marketers and, in Northern California, they compete directly for this business. These unbranded marketers provide lower-cost competition to the branded refiner-marketers. The divestiture will insure that the remaining independent marketers have two vigorous competitors for their business, thus helping them to survive and continue to provide a lower-cost alternative for consumers. This competition, in turn, will increase the incentive for Valero and the acquirer to supply more CARB gasoline, thus, increasing swing capacity. The divestiture will complicate the ability of the Northern California refiners to coordinate their production because there will be more refiners than there would be without the divestiture. Valero and the acquirer will likely have different incentives than the integrated refiner-marketers and may be less willing to coordinate output decisions with the refiner-marketers. Although the divestiture will have the most direct effect in Northern California, it will also help competition in California as a whole; since supplies are longer in Northern California, CARB gasoline typically flows north to south. Maintaining production in Northern California will therefore result in more product availability throughout the state.

In considering an application to divest the Ultramar Golden Eagle refinery and associated marketing assets to an acquirer, the Commission will consider the acquirer's ability and incentive to invest and compete in the businesses in which Ultramar was engaged in California. The Commission will consider, *inter alia,* whether the acquirer has the business experience, technical judgment and available capital to continue to invest in the refinery in order to maintain CARB gasoline production even in the event of changing environmental regulation.

B. Other Terms

Paragraphs III–VII of the Proposed Order detail certain general provisions. Pursuant to Paragraph III, if Respondents fail to comply with the divestiture ordered in Paragraph II, the Commission may appoint a trustee to effectuate the divestiture of the Golden Eagle Refinery and the 70 retail stations, or substitute a package containing Ultramar's two California refineries and all of Ultramar's company-operated retail stations. Paragraph IV requires the Respondents to provide the Commission with a report of compliance with the Proposed Order every sixty days until the divestitures are completed.

Paragraph V provides for notification to the Commission in the event of any changes in the corporate Respondents. Paragraph VI requires that Respondents provide the Commission with access to their facilities and employees for the purposes of determining or securing compliance with the Proposed Order. Finally, to avoid conflicts between the Proposed Order and the State consent decrees, Paragraph VII provides that if a State fails to approve any of the divestitures contemplated by the Proposed Order, then the period of time required under the Proposed Order for such divestiture shall be extended for sixty days.

V. Opportunity for Public Comment

The Proposed Order has been placed on the public record for thirty (30) days for receipt of comments by interested persons. The Commission, pursuant to a change in its Rules of Practice, has also issued its Complaint in this matter, as well as a Hold Separate Order. Comments received during this thirty day comment period will become part of the public record. After thirty (30) days, the Commission will again review the Proposed Order and the comments received and will decide whether it should withdraw from the Proposed Order or make final the Proposed Order.

By accepting the Proposed Order subject to final approval, the Commission anticipates that the competitive problems alleged in the Complaint will be resolved. The purpose of this analysis is to invite public comment on the Proposed Order, including the proposed divestitures, and to aid the Commission in its determination of whether it should make final the Proposed Order contained in the agreement. This analysis is not intended to constitute an official interpretation of the Proposed Order, nor is it intended to modify the terms of the Proposed Order in any way.

By direction of the Commission.

Donald S. Clark,

Secretary.

[FR Doc. 01–31779 Filed 12–26–01; 8:45 am]

BILLING CODE 6750–01–M

DEPARTMENT OF HEALTH AND HUMAN SERVICES

Centers for Disease Control and Prevention

Citizens Advisory Committee on Public Health Service Activities and Research at Department of Energy (DOE) Sites: Savannah River Site Health Effects Subcommittee (SRSHES)

In accordance with section 10(a)(2) of the Federal Advisory Committee Act (Pub. L. 92–463), the Centers for Disease Control and Prevention (CDC), and the Agency for Toxic Substances and Disease Registry (ATSDR) announce the following meeting.

Name: Citizens Advisory Committee on Public Health Service Activities and Research at Department of Energy (DOE) Sites: Savannah River Site Health Effects Subcommittee (SRSHES).

Times and Dates: 8:30 a.m.–4:45 p.m., January 10, 2002. 8:30 a.m.–12 noon, January 11, 2002.

Place: Charleston Riverview Hotel (formerly Radisson Hotel Charleston) 170 Lockwood Drive, Charleston, South Carolina 29403, telephone (843) 723–3000, fax (843) 723–0276.

Status: Open to the public, limited only by the space available. The meeting room accommodates approximately 50 people.

Background: Under a Memorandum of Understanding (MOU) signed in December 1990 with DOE, and replaced by MOUs signed in 1996 and 2000, the Department of Health and Human Services (HHS) was given the responsibility and resources for conducting analytic epidemiologic investigations of residents of communities in the vicinity of DOE

facilities, workers at DOE facilities, and other persons potentially exposed to radiation or to potential hazards from non-nuclear energy production use. HHS delegated program responsibility to CDC.

In addition, a memo was signed in October 1990 and renewed in November 1992, 1996, and in 2000, between ATSDR and DOE. The MOU delineates the responsibilities and procedures for ATSDR's public health activities at DOE sites required under sections 104, 105, 107, and 120 of the Comprehensive Environmental Response, Compensation, and Liability Act (CERCLA or ''Superfund''). These activities include health consultations and public health assessments at DOE sites listed on, or proposed for, the Superfund National Priorities List and at sites that are the subject of petitions from the public; and other health-related activities such as epidemiologic studies, health surveillance, exposure and disease registries, health education, substance-specific applied research, emergency response, and preparation of toxicological profiles.

Purpose: This subcommittee is charged with providing advice and recommendations to the Director, CDC, and the Administrator ATSDR, regarding community concerns pertaining to CDC's and ATSDR's public health activities and research at this DOE site. The purpose of this meeting is to provide a forum for community interaction and serve as a vehicle for community concerns to be expressed as advice and recommendations to CDC and ATSDR.

Matters to be Discussed: Agenda items include an update from the National Institute for Occupational Safety and Health (NIOSH); a presentation on toxicity of heavy metals and radionuclides; an update on screening methods for Savannah River Site production workers; and status reports from the SRSHES working groups on Epidemiologic Data, Scenario Screening, and Phase II—Community Summary.

Agenda items are subject to change as priorities dictate.

An administrative delay prevented meeting the 15-day publication requirement.

Contact Person for More Information: Phillip Green, Executive Secretary, SRSHES, Radiation Studies Branch, Division of Environmental Hazards and Health Effects, NCEH, CDC, 1600 Clifton Road, N.E. (E–39), Atlanta, GA 30333, telephone 404/498–1800, fax 404/498–1811.

The Director, Management Analysis and Services Office, has been delegated the authority to sign Federal Register notices pertaining to announcements of meetings and other committee management activities for both CDC and ATSDR.

Dated: December 19, 2001.

John Burckhardt,

Acting Director, Management Analysis and Services Office, Centers for Disease Control and Prevention.

[FR Doc. 01–31733 Filed 12–26–01; 8:45 am]

BILLING CODE 4163–18–P

DEPARTMENT OF HEALTH AND HUMAN SERVICES

Centers for Medicare & Medicaid Services

Privacy Act of 1974; Report of a Modified or Altered System

AGENCY: Department of Health and Human Services (HHS), Centers for Medicare & Medicaid Services (CMS) (formerly the Health Care Financing Administration).

ACTION: Notice of modified or altered System of Records (SOR).

SUMMARY: In accordance with the requirements of the Privacy Act of 1974, we are proposing to modify or alter an SOR titled ''Home Health Agency Outcome and Assessment Information Set (HHA OASIS),'' System No. 09–70–9002. CMS proposes to add a new routine use authorizing disclosure to national accrediting organizations that have been approved by CMS for deeming authority for Medicare requirements for home health services. Information will be released to these organizations upon specific request, and only for those facilities that they accredit and that participate in the Medicare program by virtue of their accreditation status, *i.e.,* facilities with deemed status. Additionally, disclosures authorized by published routine uses numbers 3 and 4 are similar in scope and as such will be combined into one routine use to allow release of information to ''another Federal and/or state agency, agency of a state government, an agency established by state law, or its fiscal agent, for evaluating and monitoring the quality of home health care and contribute to the accuracy of health insurance operations.'' CMS will also add 2 new routine uses that will permit disclosure of information in this system to combat fraud and abuse in certain Federally funded health care programs.

In addition, the security classification previously reported as ''None'' will be modified to reflect that the data in this system are considered to be ''Level Three Privacy Act Sensitive.'' We are modifying the language in the remaining routine uses to provide clarity to CMS's intention to disclose individual-specific information contained in this system. The routine uses will then be prioritized and reordered according to their usage. We will also take the opportunity to update any sections of the system that were affected by the recent reorganization and to update language in the administrative sections to correspond with language used in other CMS SORs.

The primary purposes of the SOR are to: (1) Study and help ensure the quality of care provided by home health agencies (HHA); (2) aid in administration of the survey and certification of Medicare/Medicaid HHAs; (3) enable regulators to provide HHAs with data for their internal quality improvement activities; (4) support agencies of the state government to determine, evaluate and assess overall effectiveness and quality of HHA services provided in the state; (5) provide for the validation, and refinements of the Medicare Prospective Payment System; (6) aid in the administration of Federal and state HHA programs within the state; and (7) monitor the continuity of care for patients who reside temporarily outside of the state. Information maintained in this system will also be disclosed to: (1) Support regulatory, reimbursement, and policy functions performed within the Agency or by a contractor or consultant; (2) assist another Federal and/or state agency, agency of a state government, an agency established by state law, or its fiscal agent, for evaluating and monitoring the quality of home health care and contribute to the accuracy of health insurance operations; (3) support research, evaluation, or epidemiological projects related to the prevention of disease or disability, or the restoration or maintenance of health, and for payment related projects; (4) support the functions of Peer Review Organizations (PRO); (5) support the functions of national accrediting organizations; (6) support litigation involving the Agency; (7) support constituent requests made to a Congressional representative; and (8) combat fraud and abuse in certain health care programs. We have provided background information about the proposed system in the ''Supplementary Information'' section below. Although the Privacy Act requires only that the ''routine use'' portion of the system be published for comment, CMS invites comments on all portions of this notice. See **EFFECTIVE DATES** section for comment period.

EFFECTIVE DATES: CMS filed a modified SOR report with the Chair of the House Committee on Government Reform and Oversight, the Chair of the Senate Committee on Governmental Affairs, and the Administrator, Office of Information and Regulatory Affairs, Office of Management and Budget (OMB) on December 18, 2001. The modified SOR, including routine uses, will become effective 40 days from the publication of this notice, or from the date it was submitted to OMB and the Congress, whichever is later. We may defer implementation of this SOR or one or more of the routine use statements listed below if we receive comments that persuade us to defer implementation.

ADDRESSES: The public should address comments to: Director, Division of Data Liaison and Distribution (DDLD), CMS, Room N2–04–27, 7500 Security Boulevard, Baltimore, Maryland 21244–1850. Comments received will be available for review at this location, by appointment, during regular business hours, Monday through Friday from 9 a.m.–3 p.m., eastern daylight time.

FOR FURTHER INFORMATION CONTACT: Helene Fredeking, Technical Director, Division of Nursing Homes and Continuing Care Services, Center for Medicaid and State Operations, CMS, 7500 Security Boulevard, S2–12–25, Baltimore, Maryland 21244–1850. The telephone number is (410) 786–7304.

SUPPLEMENTARY INFORMATION:

I. Description of the Modified System

A. Background

CMS established a new SOR in 1999 containing data on the physical, mental, functional, and psychosocial status of all patients receiving the services of HHAs that are approved to participate in the Medicare and/or Medicaid programs. Information retained in this system for those individuals who have only non-Medicare and non-Medicaid payment sources will be in a non-patient identifiable format. Notice of this system was published in the **Federal Register** at 64 **Federal Register** (FR) 32992 (June 18, 1999). We published in the **Federal Register**, at 62 FR 11035 (March 10, 1997), a proposed rule with an opportunity for public comment, titled ''Medicare and Medicaid Programs: Use of the OASIS as Part of the Conditions of Participation for Home Health Agencies.'' Some provisions of this rule were published as a Final Rule in the **Federal Register** at 64 FR 3764 (January 25, 1999) titled ''Medicare and Medicaid Program: Comprehensive Assessment and Use of the OASIS as Part of the Conditions of Participation for Home Health Agencies.''

The rule required that all HHAs participating in the Medicare and Medicaid programs be required to complete a standard, valid, patient assessment data set; i.e., the OASIS, as part of their comprehensive assessments and updates when evaluating adult, non-maternity patients as required by section 484.55 of the Conditions of Participation. Also published in the **Federal Register** at 64 FR 3748 (January 25, 1999) was an interim final rule with comment titled ''Medicare and Medicaid: Reporting Outcome and Assessment Information Set (OASIS) Data as Part of the Conditions of Participation for Home Health Agencies.'' This interim rule established an additional requirement of the Conditions of Participation for HHAs approved to participate in Medicare and/or Medicaid, to encode and report OASIS electronically into a national database. Information retained in this system for those individuals who have only non-Medicare and non-Medicaid payment sources will be in a non-patient identifiable format and will be used only for statistical purposes and to ensure quality of care for all patients. Information on Medicare and Medicaid patients will be identified for quality of care and reimbursement purposes.

B.Statutory and Regulatory Basis for SOR

Sections 1102(a), 1154, 1861(m), 1861(o), 1861(z), 1863, 1864, 1865, 1866, 1871, 1891, and 1902 of the Social Security Act (the Act) authorize the Administrator of CMS to require HHAs participating in the Medicare and Medicaid programs to complete a standard, valid, patient assessment data set; i.e., the OASIS, as part of their comprehensive assessments and updates when evaluating adult, non-maternity patients as required by section 484.55 of the Conditions of Participation.

II. Collection and Maintenance of Data in the System

A. Scope of the Data Collected

The OASIS will be completed on all patients, except those in a category exempted by administrative policies and procedures, who receive services from an HHA certified for Medicare and Medicaid payments. The OASIS data set includes identifiers. It also includes information on: (1) Patient History, (2) Living Arrangements, (3) Supportive Assistance, (4) Sensory Status, (5) Integumentary Status, (6) Respiratory Status, (7) Elimination Status, (8) Neuro/Emotional/Behavioral Status, (9) Activities of Daily Living/Instrumental Activities of Daily Living (ADL/IADL), (10) Medications, (11) Equipment Management, (12) Emergent Care, and (13) Discharge. Identifiers are patient name, social security number, Medicare number and Medicaid number. A masked identifier is one in which an encrypted value is permanently substituted for an identifier to prevent recipients of the information from identifying the individual.

The OASIS information will be submitted by the HHA to the government for all patients, except pre-partum and postpartum patients, patients under 18 years of age, and patients receiving other than personal care or health care services; i.e., housekeeping services and chore services. Identifiers will be included for all patients receiving services paid for by Medicare traditional fee-for-service, Medicaid traditional fee-for-service, Medicare HMO/managed care or Medicaid HMO/managed care. For patients with only a non-Medicare or non-Medicaid payment source, the HHA will submit OASIS information with masked identifiers and will retain the identifier and masked identifier at the HHA. In other words, the patient identifier for non-Medicare and non-Medicaid patients will only be known and retained by the HHA and not by the government.

B. Agency Policies, Procedures, and Restrictions on the Routine Use

The Privacy Act permits us to disclose information without an individual's consent if the information is to be used for a purpose that is compatible with the purpose(s) for which the information was collected. Any such disclosure of data is known as a ''routine use.'' The government will only release OASIS information that can be associated with an individual HHA patient as provided for under ''Section III. Entities Who May Receive Disclosures Under Routine Use.'' Both identifiable and non-identifiable data may be disclosed under a routine use. Identifiable data includes individual records with OASIS information and identifiers. Non-identifiable data includes individual records with OASIS information and masked identifiers or OASIS information with identifiers stripped out of the file.

We will only disclose the minimum personal data necessary to achieve the purpose of OASIS. CMS has the following policies and procedures concerning disclosures of information that will be maintained in the system.

In general, disclosure of information from the SOR will be approved only for the minimum information necessary to accomplish the purpose of the disclosure after CMS:

Determines that the use or disclosure is consistent with the reason that the data is being collected; e.g., study and help ensure the quality of care provided by HHAs, developing and refining payment systems, and monitoring the quality of care provided to patients.

1. Determines that:

a. The purpose for which the disclosure is to be made can only be accomplished if the record is provided in individually identifiable form;

b. the purpose for which the disclosure is to be made is of sufficient importance to warrant the effect and/or risk on the privacy of the individual that additional exposure of the record might bring; and

c. there is a strong probability that the proposed use of the data would in fact accomplish the stated purpose(s).

2. Requires the information recipient to:

a. Establish administrative, technical, and physical safeguards to prevent unauthorized use of disclosure of the record;

b. remove or destroy at the earliest time all patient-identifiable information; and

c. agree to not use or disclose the information for any purpose other than the stated purpose under which the information was disclosed.

3. Determines that the data are valid and reliable.

III. Proposed Routine Use Disclosures of Data in the System

A. Entities Who May Receive Disclosures Under Routine Use

These routine uses specify circumstances, in addition to those provided by statute in the Privacy Act of 1974, under which CMS may release information from the OASIS without the consent of the individual to whom such information pertains. Each proposed disclosure of information under these routine uses will be evaluated to ensure that the disclosure is legally permissible, including but not limited to ensuring that the purpose of the disclosure is compatible with the purpose for which the information was collected. We are proposing to establish or modify the following routine use disclosures of information maintained in the system:

1. To Agency contractors, or consultants who have been contracted by the Agency to assist in accomplishment of a CMS function relating to the purposes for this system and who need to have access to the records in order to assist CMS.

We contemplate disclosing information under this routine use only in situations in which CMS may enter into a contractual or similar agreement with a third party to assist in accomplishing a CMS function relating to purposes for this SOR.

CMS occasionally contracts out certain of its functions when doing so would contribute to effective and efficient operations. CMS must be able to give a contractor or consultant whatever information is necessary for the contractor or consultant to fulfill its duties. In these situations, safeguards are provided in the contract prohibiting the contractor or consultant from using or disclosing the information for any purpose other than that described in the contract and requires the contractor or consultant to return or destroy all information at the completion of the contract.

2. To another Federal or state agency, agency of a state government, an agency established by state law, or its fiscal agent, for evaluating and monitoring the quality of home health care and contribute to the accuracy of health insurance operations to:

a. Contribute to the accuracy of CMS's proper payment of Medicare benefits,

b. enable such agency to administer a Federal health benefits program, or as necessary to enable such agency to fulfill a requirement of a Federal statute or regulation that implements a health benefits program funded in whole or in part with Federal funds, and/or

c. assist Federal/state Medicaid programs within the state.

Other Federal or state agencies (e.g., state survey agencies and state Medicaid agencies) may require OASIS data to contribute to the accuracy of CMS's health insurance operations (payment, treatment and coverage) and/or to support state agencies in the evaluations and monitoring of care provided by HHAs;

Other Federal or state agencies may require OASIS data for purposes of determining, evaluating and/or assessing overall or aggregate cost, effectiveness, and/or the quality of HHA services provided in the state;

Other Federal or state agencies may require OASIS data for developing and operating Medicaid reimbursement systems or for the purpose of administration of Federal/state HHA programs within the state. Data will be released to the state only on those individuals who are either patients under the services of an HHA within the state, or are legal residents of the state, regardless of the location of the HHA in which the patient is receiving services.

State government components in partnership with CMS will use OASIS information to enhance the monitoring of HHAs' performance in providing patient care. States will also use this information to study the cost effectiveness and quality of Medicaid programs. In addition some states will use OASIS information for case mix Medicaid reimbursement systems. States will use OASIS data to monitor the continuity of care delivered to patients who, for whatever reason, temporarily reside in another state and receive HHA services during that stay.

Other state agencies in their administration of a Federal health program may require OASIS information in order to support evaluations and monitoring of quality of care for special populations or special care area, including proper reimbursement for services provided. Releases of information would be allowed if the proposed use(s) for the information proved compatible with the purpose for which CMS collects the information.

3. To an individual or organization for a research, evaluation, or epidemiological project related to the prevention of disease or disability, the restoration or maintenance of health, or payment related projects.

The OASIS data will provide the research, evaluations and epidemiological projects a broader, longitudinal, national perspective of the status of HHA patients. CMS anticipates that many researchers will have legitimate requests to use these data in projects that could ultimately improve the care provided to HHA patients and the policy that governs the care.

4. To PROs in order to assist the PRO to perform Title XI and Title XVIII functions relating to assessing and improving HHA quality of care.

PROs will work with HHAs to implement quality improvement programs, provide consultation to CMS, its contractors, and to state agencies. The PROs will provide a supportive role to HHAs in their endeavors to comply with Medicare Conditions of Participation; will assist the state agencies in related monitoring and enforcement efforts; assist CMS and help regional home health intermediaries in home health program integrity assessment; and prepare summary information about the nation's home health care for release to beneficiaries.

5. To national accrediting organizations with approval for deeming authority for Medicare requirements for

home health services (i.e., the Joint Commission on Accreditation of Healthcare Organizations, or the Community Health Accreditation Program). Information will be released to these organizations upon specific request, and only for those facilities that they accredit, and that participate in the Medicare program by virtue of their accreditation (deemed) status.

CMS anticipates providing these national accrediting organizations with OASIS information to enable them to target potential or identified problems during the organization's accreditation review process of that facility.

6. To the Department of Justice (DOJ), court, or adjudicatory body when:

a. The Agency or any component thereof; or

b. any employee of the Agency in his or her official capacity; or

c. any employee of the Agency in his or her individual capacity where the DOJ has agreed to represent the employee; or

d. the United States Government;

is a party to litigation or has an interest in such litigation, and by careful review, CMS determines that the records are both relevant and necessary to the litigation.

Whenever CMS is involved in litigation, or occasionally when another party is involved in litigation and CMS's policies or operations could be affected by the outcome of the litigation, CMS would be able to disclose information to the DOJ, court, or adjudicatory body involved.

7. To a Member of Congress or to a congressional staff member in response to an inquiry of the congressional office made at the written request of the constituent about whom the record is maintained.

Beneficiaries sometimes request the help of a Member of Congress in resolving some issue relating to a matter before CMS. The Member of Congress then writes CMS, and CMS must be able to give sufficient information to be responsive to the inquiry.

8. To a CMS contractor (including, but not limited to Fiscal Intermediaries and carriers) that assists in the administration of a CMS-administered health benefits program, or to a grantee of a CMS-administered grant program, when disclosure is deemed reasonably necessary by CMS to prevent, deter, discover, detect, investigate, examine, prosecute, sue with respect to, defend against, correct, remedy, or otherwise combat fraud or abuse in such programs.

We contemplate disclosing information under this routine use only in situations in which CMS may enter into a contract or grant with a third party to assist in accomplishing CMS functions relating to the purpose of combating fraud and abuse;

CMS occasionally contracts out certain of its functions when doing so would contribute to effective and efficient operations. CMS must be able to give a contractor or grantee whatever information is necessary for the contractor or grantee to fulfill its duties. In these situations, safeguards are provided in the contract prohibiting the contractor or grantee from using or disclosing the information for any purpose other than that described in the contract and requiring the contractor or grantee to return or destroy all information.

9. To another Federal agency or to an instrumentality of any governmental jurisdiction within or under the control of the United States (including any state or local governmental agency), that administers, or that has the authority to investigate potential fraud or abuse in, a health benefits program funded in whole or in part by Federal funds, when disclosure is deemed reasonably necessary by CMS to prevent, deter, discover, detect, investigate, examine, prosecute, sue with respect to, defend against, correct, remedy, or otherwise combat fraud or abuse in such programs.

Other agencies may require OASIS information for the purpose of combating fraud and abuse in such Federally funded programs.

B. Additional Circumstances Affecting Routine Use Disclosure

This SOR contains Protected Health Information as defined by HHS regulation ''Standards for Privacy of Individually Identifiable Health Information'' (45 CFR parts 160 and 164, 65 **Federal Register** FR 82462 (12–28–00), as amended by 66 FR 12434 (2–26–01)). Disclosures of Protected Health Information authorized by these routine uses may only be made if, and as permitted or required by this HHS regulation ''Standards for Privacy of Individually Identifiable Health Information''

In addition, our policy will be to prohibit release even of non-identifiable data, except pursuant to one of the routine uses, if there is a possibility that an individual can be identified through implicit deduction based on small cell sizes (instances where the patient population is so small that individuals who are familiar with the enrollees could, because of the small size, use this information to deduce the identity of the beneficiary).

IV. Safeguards

The HHA OASIS system will conform to applicable law and policy governing the privacy and security of Federal automated information systems. These include but are not limited to: The Privacy Act of 1984, Computer Security Act of 1987, the Paperwork Reduction Act of 1995, the Clinger-Cohen Act of 1996, and OMB Circular A–130, Appendix III, ''Security of Federal Automated Information Resources.'' CMS has prepared a comprehensive system security plan as required by OMB Circular A–130, Appendix III. This plan conforms fully to guidance issued by the National Institute for Standards and Technology (NIST) in NIST Special Publication 800–18, ''Guide for Developing Security Plans for Information Technology Systems.'' Paragraphs A–C of this section highlight some of the specific methods that CMS is using to ensure the security of this system and the information within it.

A. Authorized Users

Personnel having access to the system have been trained in Privacy Act and systems security requirements. Employees who maintain records in the system are instructed not to release any data until the intended recipient agrees to implement appropriate administrative, technical, procedural, and physical safeguards sufficient to protect the confidentiality of the data and to prevent unauthorized access to the data. In addition, CMS is monitoring the authorized users to ensure against excessive or unauthorized use. Records are used in a designated work area or workstation and the system location is attended at all times during working hours.

To assure security of the data, the proper level of class user is assigned for each individual user as determined at the state agency level. This prevents unauthorized users from accessing and modifying critical data. The system database configuration includes five classes of database users:

- *Database Administrator* class owns the database objects; e.g., tables, triggers, indexes, stored procedures, packages, and has database administration privileges to these objects;
- *Quality Control Administrator* class has read and write access to key fields in the database;
- *Quality Index Report Generator* class has read-only access to all fields and tables;
- *Policy Research* class has query access to tables, but are not allowed to access confidential patient identification information; and

• *Submitter* class has read and write access to database objects, but no database administration privileges. This class is used by the OASIS data submission applications to receive and validate HHA file uploads.

B. Physical Safeguards

All server sites have implemented the following minimum requirements to assist in reducing the exposure of computer equipment and thus achieve an optimum level of protection and security for the HHA OASIS system:

Access to all servers is controlled, with access limited to only those support personnel with a demonstrated need for access. Servers are to be kept in a locked room accessible only by specified management and system support personnel. Each server requires a specific log on process. All entrance doors are identified and marked. A log is kept of all personnel who were issued a security card, key and/or combination that grants access to the room housing the server, and all visitors are escorted while in this room. All servers are housed in an area where appropriate environmental security controls are implemented, which include measures implemented to mitigate damage to Automated Information System resources caused by fire, electricity, water and inadequate climate controls.

Protection applied to the workstations, servers and databases include:

• User Log ons—Authentication is performed by the Primary Domain Controller/Backup Domain Controller of the log on domain.

• Workstation Names—Workstation naming conventions may be defined and implemented at the state agency level.

• Hours of Operation—May be restricted by Windows NT. When activated all applicable processes will automatically shut down at a specific time and not be permitted to resume until the predetermined time. The appropriate hours of operation are determined and implemented at the state agency level.

• Inactivity Lockout—Access to the NT workstation is automatically locked after a specified period of inactivity.

• Warnings—Legal notices and security warnings display on all servers and when servers are accessed by workstations.

• Remote Access Security—Windows NT Remote Access Service (RAS) security handles resource access control. Access to NT resources is controlled for remote users in the same manner as local users, by utilizing Windows NT file and sharing permissions. Dial-in access can be granted or restricted on a user-by-user basis through the Windows NT RAS administration tool.

There are several levels of security found in the HHA OASIS system. Windows NT provides much of the overall system security. The Windows NT security model is designed to meet the C2-level criteria as defined by the U.S. Department of Defense's Trusted Computer System Evaluation Criteria document (DoD 5200.28–STD, December 1985). Netscape Enterprise Server is the security mechanism for all HHA transmission connections to the system. As a result, Netscape controls all HHA information access requests. Anti-virus software is applied at both the workstation and NT server levels. Access to different areas on the Windows NT server are maintained through the use of file, directory and share level permissions. These different levels of access control provide security that is managed at the user and group level within the NT domain. The file and directory level access controls rely on the presence of an NT File System hard drive partition. This provides the most robust security and is tied directly to the file system. Windows NT security is applied at both the workstation and NT server levels.

C. Procedural Safeguards

All automated systems must comply with Federal laws, guidance, and policies for information systems security as stated previously in this section. Each automated information system should ensure a level of security commensurate with the level of sensitivity of the data, risk, and magnitude of the harm that may result from the loss, misuse, disclosure, or modification of the information contained in the system.

V. Effect of the Modified System on Individual Rights

CMS established this system in accordance with the principles and requirements of the Privacy Act and will collect, use, and disseminate information only as prescribed therein. Data in this system will be subject to the authorized releases in accordance with the routine uses identified in this system. CMS has assigned a higher level of security clearance for the information in this system to provide added security and protection of data in this system.

CMS will monitor the collection and reporting of OASIS data. OASIS information on patients is completed by the HHA and submitted to CMS through standard systems located at the state agencies. Accuracy of the data is important since incorrect information could result in the wrong reimbursement for services and a less effective process for assuring quality of services. CMS will utilize a variety of onsite and offsite edits and audits to increase the accuracy of OASIS data. CMS will take precautionary measures (see item IV. above) to minimize the risks of unauthorized access to the records and the potential harm to individual privacy or other personal or property rights including not collecting patient identifiable data for non-Medicare and non-Medicaid patients. Therefore, CMS anticipates no adverse effect on any of these rights. CMS will collect only that information necessary to perform the system's functions. In addition, CMS will make disclosure of identifiable data from the proposed system only with consent of the subject individual, or his/her legal representative, or in accordance with an applicable exception provision of the Privacy Act.

To secure data that resides in a CMS Privacy Act SOR; to ensure the integrity, security, and confidentiality of information maintained by CMS; and to permit appropriate disclosure and use of such data as permitted by law, CMS and the non-CMS recipient of the data (hereafter termed User), enter into an agreement to comply with the following specific requirements. The agreement addresses the conditions under which CMS will disclose and the User will obtain and use the information contained in the system. The parties mutually agree that CMS retains ownership rights to the data and that the User does not obtain any right, title, or interest in any of the data furnished by CMS. The User represents and warrants further that the facts and statements made in any study or research protocol or project plan submitted to CMS for each purpose are complete and accurate. The User shall not disclose, release, reveal, show, sell, rent, lease, loan, or otherwise grant access to the data disclosed from the SOR to any person. The User agrees that access to the data shall be limited to the minimum number of individuals necessary to achieve the purpose stated in the protocol and to those individuals on a need to know basis only. If CMS determines or has reasonable belief that the User has made an unauthorized disclosure of the data, CMS in its sole discretion may require the User to: (a) Promptly investigate and report to CMS any alleged or actual unauthorized disclosures; (b) promptly resolve any problems identified by the investigation; (c) submit a formal response to any allegation of unauthorized disclosures;

(d) submit a corrective action plan with steps to prevent any future unauthorized disclosures; and (e) return data files to CMS. If CMS determines or has reasonable belief that unauthorized disclosures have taken place; CMS may refuse to release further CMS data to the User for a period of time to be determined by CMS.

The Privacy Act provides criminal penalties for certain violations. The Act provides that ''[a]ny officer or employee of an agency, who by virtue of his [or her] employment or official position, has possession of, or access to, agency records which contain individually identifiable information the disclosure of which is prohibited by this section or by rules or regulations established thereunder, and who knowing that disclosure of the specific materials is so prohibited, willfully discloses the material in any manner to any person or agency not entitled to receive it, shall be guilty of a misdemeanor and fined not more than $5,000'' (5 U.S.C. 552a (i)(1)). The Act also provides that ''[a]ny person who knowingly and willfully requests or obtains any record concerning an individual from an agency under false pretenses shall be guilty of a misdemeanor and fined not more than $5,000 (5 U.S.C. 552a (i)(3)). The agency's contractor and any contractor's employees who are covered by 5 U.S.C. 552a (m) (1) are considered employees of the agency for the purposes of these criminal penalties.

CMS, therefore, does not anticipate an unfavorable effect on individual privacy as a result of the disclosure of information relating to individuals.

Dated: December 4, 2001.

Thomas A. Scully,

Administrator, Centers for Medicare & Medicaid Services.

09–70–9002

SYSTEM NAME:

Home Health Agency Outcome and Assessment Information Set (HHA OASIS)

SECURITY CLASSIFICATION:

Level Three Privacy Act Sensitive

SYSTEM LOCATION:

CMS Data Center, 7500 Security Boulevard, North Building, First Floor, Baltimore, Maryland 21244–1850. CMS contractors and agents at various locations.

CATEGORIES OF INDIVIDUALS COVERED BY THE SYSTEM:

The system of records (SOR) will contain clinical assessment information (OASIS) for all patients receiving the services of a Medicare and/or Medicaid approved HHA, except prepartum and postpartum patients, patients under 18 years of age, and patients receiving other than personal care or health care services; i.e., housekeeping services and chore services. Identifiable information will be maintained in the SOR only for those individuals whose payments come from Medicare or Medicaid.

CATEGORIES OF RECORDS IN THE SYSTEM:

This SOR will contain individual-level demographic and identifying data, as well as clinical status data for patients with the payment sources of Medicare traditional fee for service, Medicaid traditional fee for service, Medicare HMO/managed care or Medicaid HMO/managed care.

AUTHORITY FOR MAINTENANCE OF THE SYSTEM:

Sections 1102(a), 1154, 1861(m), 1861(o), 1861(z), 1863, 1864, 1865, 1866, 1871, 1891, and 1902 of the Social Security Act (the Act) authorize the Administrator of CMS to require HHAs participating in the Medicare and Medicaid programs to complete a standard, valid, patient assessment data set; i.e., the OASIS, as part of their comprehensive assessments and updates when evaluating adult, non-maternity patients as required by section 484.55 of the Conditions of Participation.

PURPOSE(S) OF THE SYSTEM:

The primary purposes of the SOR are to: (1) Study and help ensure the quality of care provided by home health agencies (HHA); (2) aid in administration of the survey and certification of Medicare/Medicaid HHAs; (3) enable regulators to provide HHAs with data for their internal quality improvement activities; (4) support agencies of the state government to determine, evaluate and assess overall effectiveness and quality of HHA services provided in the state; (5) provide for the validation, and refinements of the Medicare Prospective Payment System; (6) aid in the administration of Federal and state HHA programs within the state; and (7) monitor the continuity of care for patients who reside temporarily outside of the state. Information maintained in this system will also be disclosed to: (1) Support regulatory, reimbursement, and policy functions performed within the Agency or by a contractor or consultant; (2) assist another Federal and/or state agency, agency of a state government, an agency established by state law, or its fiscal agent, for evaluating and monitoring the quality of home health care and contribute to the accuracy of health insurance operations; (3) support research, evaluation, or epidemiological projects related to the prevention of disease or disability, or the restoration or maintenance of health, and for payment related projects; (4) support the functions of Peer Review Organizations (PRO); (5) support the functions of national accrediting organizations; (6) support litigation involving the Agency; (7) support constituent requests made to a Congressional representative; and (8) combat fraud and abuse in certain health care programs.

ROUTINE USES OF RECORDS MAINTAINED IN THE SYSTEM, INCLUDING CATEGORIES OF USERS AND THE PURPOSES OF SUCH USES:

These routine uses specify circumstances, in addition to those provided by statute in the Privacy Act of 1974, under which CMS may release information from the OASIS without the consent of the individual to whom such information pertains. Each proposed disclosure of information under these routine uses will be evaluated to ensure that the disclosure is legally permissible, including but not limited to ensuring that the purpose of the disclosure is compatible with the purpose for which the information was collected. In addition, our policy will be to prohibit release even of non-identifiable data, except pursuant to one of the routine uses, if there is a possibility that an individual can be identified through implicit deduction based on small cell sizes (instances where the patient population is so small that individuals who are familiar with the enrollees could, because of the small size, use this information to deduce the identity of the beneficiary).

This SOR contains Protected Health Information as defined by HHS regulation ''Standards for Privacy of Individually Identifiable Health Information'' (45 CFR Parts 160 and 164, 65 **Federal Register** (FR) 82462 (12–28–00), as amended by 66 FR 12434 (2–26–01)). Disclosures of Protected Health Information authorized by these routine uses may only be made if, and as permitted or required by this HHS regulation ''Standards for Privacy of Individually Identifiable Health Information.'' We are proposing to establish or modify the following routine use disclosures of information maintained in the system:

1. To Agency contractors, or consultants who have been contracted by the Agency to assist in accomplishment of a CMS function relating to the purposes for this system and who need to have access to the records in order to assist CMS.

2. To another Federal or state agency, agency of a state government, an agency

established by state law, or its fiscal agent, for evaluating and monitoring the quality of home health care and contribute to the accuracy of health insurance operations to:

a. Contribute to the accuracy of CMS's proper payment of Medicare benefits,

b. Enable such agency to administer a Federal health benefits program, or as necessary to enable such agency to fulfill a requirement of a Federal statute or regulation that implements a health benefits program funded in whole or in part with Federal funds, and/or

c. Assist Federal/state Medicaid programs within the state.

3. To an individual or organization for a research, evaluation, or epidemiological project related to the prevention of disease or disability, the restoration or maintenance of health, or payment related projects.

4. To Peer Review Organizations (PRO) in order to assist the PRO to perform Title XI and Title XVIII functions relating to assessing and improving HHA quality of care.

5. To national accrediting organizations with approval for deeming authority for Medicare requirements for home health services (i.e., the Joint Commission on Accreditation of Healthcare Organizations, or the Community Health Accreditation Program). Information will be released to these organizations only for those facilities that they accredit, and that participate in the Medicare program by virtue of their accreditation (deemed) status.

6. To the Department of Justice (DOJ), court, or adjudicatory body when:

a. The Agency or any component thereof; or

b. Any employee of the Agency in his or her official capacity; or

c. Any employee of the Agency in his or her individual capacity where the DOJ has agreed to represent the employee; or

d. The United States Government; is a party to litigation or has an interest in such litigation, and by careful review, CMS determines that the records are both relevant and necessary to the litigation.

7. To a Member of Congress or to a congressional staff member in response to an inquiry of the congressional office made at the written request of the constituent about whom the record is maintained.

8. To a CMS contractor (including, but not limited to Fiscal Intermediaries and carriers) that assists in the administration of a CMS-administered health benefits program, or to a grantee of a CMS-administered grant program, when disclosure is deemed reasonably necessary by CMS to prevent, deter, discover, detect, investigate, examine, prosecute, sue with respect to, defend against, correct, remedy, or otherwise combat fraud or abuse in such programs.

9. To another Federal agency or to an instrumentality of any governmental jurisdiction within or under the control of the United States (including any state or local governmental agency), that administers, or that has the authority to investigate potential fraud or abuse in, a health benefits program funded in whole or in part by Federal funds, when disclosure is deemed reasonably necessary by CMS to prevent, deter, discover, detect, investigate, examine, prosecute, sue with respect to, defend against, correct, remedy, or otherwise combat fraud or abuse in such programs.

POLICIES AND PRACTICES FOR STORING, RETRIEVING, ACCESSING, RETAINING, AND DISPOSING OF RECORDS IN THE SYSTEM:

STORAGE:

All records are stored on magnetic media.

RETRIEVABILITY:

The Medicare and Medicaid records are retrieved by health insurance claim number, social security number (SSN) or by state assigned Medicaid number.

SAFEGUARDS:

CMS has safeguards for authorized users and monitors such users to ensure against excessive or unauthorized use. Personnel having access to the system have been trained in the Privacy Act and systems security requirements. Employees who maintain records in the system are instructed not to release any data until the intended recipient agrees to implement appropriate administrative, technical, procedural, and physical safeguards sufficient to protect the confidentiality of the data and to prevent unauthorized access to the data.

In addition, CMS has physical safeguards in place to reduce the exposure of computer equipment and thus achieve an optimum level of protection and security for the HHA OASIS system. For computerized records, safeguards have been established in accordance with HHS standards and National Institute of Standards and Technology guidelines; e.g., security codes will be used, limiting access to authorized personnel. System securities are established in accordance with HHS, Information Resource Management Circular #10, Automated Information Systems Security Program; CMS's Information System Security Policy and Program Handbook; and OMB Circular No. A–130 (revised) Appendix III.

RETENTION AND DISPOSAL:

CMS and the repository of the National Archive and Records Administration will retain identifiable OASIS assessment data for a total period not to exceed fifteen (15) years.

SYSTEM MANAGER AND ADDRESS:

Director, Center for Medicaid and State Operations, CMS, 7500 Security Boulevard, Baltimore, Maryland, 21244–1850.

NOTIFICATION PROCEDURE:

For purpose of access, the subject individual should write to the system manager who will require the system name, health insurance claim number, and for verification purposes, the subject individual's name (woman's maiden name, if applicable), SSN (furnishing the SSN is voluntary, but it may make searching for a record easier and prevent delay), address, date of birth, and sex.

RECORD ACCESS PROCEDURE:

For purpose of access, use the same procedures outlined in Notification Procedures above. Requestors should also reasonably specify the record contents being sought. (These procedures are in accordance with Department regulation 45 CFR 5b.5(a)(2)).

CONTESTING RECORD PROCEDURES:

The subject individual should contact the system manager named above, and reasonably identify the record and specify the information to be contested. State the corrective action sought and the reasons for the correction with supporting justification. (These procedures are in accordance with Department regulation 45 CFR 5b.7.)

RECORD SOURCE CATEGORIES:

The Outcome and Assessment Information Set.

SYSTEMS EXEMPTED FROM CERTAIN PROVISIONS OF THE ACT:

None.

[FR Doc. 01–31546 Filed 12–26–01; 8:45 am]

BILLING CODE 4120–03–P

DEPARTMENT OF HEALTH AND HUMAN SERVICES

Administration for Children and Families

Agency Recordkeeping/Reporting Requirements Under Emergency Review by the Office of Management and Budget (OMB)

Title: Confirmation of Immigration Status for Recently-Released Indefinite Detainees.

OMB No.: New request.

Description: On June 28, 2001, the U.S. Supreme Court issued its decision in *Zadvydas* v. *Davis.* The case concerned ''indefinite detainees'' or ''lifers,'' which are terms used to refer to noncitizens who, after having served time for a criminal conviction and being given a final order of removal by the Immigration and Naturalization Service (INS), remain indefinitely in U.S. jails because their home country and no other countries will accept them. In Zadvydas the Supreme Court held that the law limits an ''alien's detention to a period reasonably necessary to bring about that alien's removal from the United States, and does not permit indefinite detention.'' Shortly after the Supreme Court decision, Attorney General John Ashcroft ordered the INS to begin looking into the release of certain indefinite detainees. Some of these individuals already have been release from detention.

In a number of cases, indefinite detainees originally came to the U.S. as refugees or had another status that made them eligible for Office of Refugee Resettlement (ORR)-funded benefits and services.[1] These individuals, upon release from detention, may come to benefit-granting agencies for assistance. Prior to providing benefits or services, benefit-granting agencies must determine status, identity, the date an individual initially became eligible for benefits (i.e., entry date) and, in certain cases, nationality. However, benefit-granting agencies are unable to make these determinations for recently released detainees for a number of reasons including lack of INS documentation showing status and entry date and incomplete and untimely responses from the INS Systematic Alien Verification for Entitlements (SAVE) System.

In this notice, ACF announces that ORR has worked out an agreement with the INS under which benefit-granting agencies will contact ORR and provide as much of the following information as possible for a recently released detainee wishing to access benefits: name, alien registration number, date of birth, social security number, home country, number on the I–94 card, parents' names, driver's license number and copies of any immigration documents. ORR then will relay this information to the INS. INS will tell ORR the individual's original immigration status, such as refugee, and ORR will inform the benefit-granting agency whether or not the individual is eligible for assistance.

Respondents: Individuals, State and local governments, not-for-profit organizations.

Annual Burden Estimates

Number of Respondents: 10.

Number of Responses per Respondent: 10.

Average Burden Hours per Response: 0.25.

Estimated Total Annual Burden Hours: 25 hours.

Additional Information: ACF is requesting that OMB grant a 180 day approval for this information collection under procedures for emergency processing by December 21, 2001. A copy of this information collection, with applicable supporting documentation, may be obtained by calling the Administration for Children and Families, Reports Clearance Officer, Robert Sargis at (202) 690–7275. In addition, a request may be made by sending an e-mail request to: *rsargis@acf.dhhs.gov.*

Comments and questions about the information collection described above should be directed to the following address by December 21, 2001: Office of Information and Regulatory Affairs, Attn: OMB Desk Officer for ACF, Office of Management and Budget, Paper Reduction Project, 725 17th Street, NW., Washington, DC 20503.

Dated: December 18, 2001.

Bob Sargis,

Reports Clearance Officer.

[FR Doc. 01–31676 Filed 12–26–01; 8:45 am]

BILLING CODE 4184–01–M

[1] Individuals with the following statuses are eligible for ORR-funded benefits (see 45 CFR 400.43 and ORR State Letters 00–17 and 01–13): (1) Refugees under § 207 of the Immigration and Nationality Act (INA), (2) asylees whose status was granted under § 208 of the INA, (3) Cuban and Haitian entrants, in accordance with the requirements in 45 CFR part 401, (4) certain Amerasians from Vietnam and (5) victims of severe forms of trafficking.

DEPARTMENT OF HEALTH AND HUMAN SERVICES

Food and Drug Administration

[Docket No. 93D–0398]

Assessment of the Effects of Antimicrobial Drug Residues From Food of Animal Origin on the Human Intestinal Flora; Availability

AGENCY: Food and Drug Administration, HHS.

ACTION: Notice.

SUMMARY: The Food and Drug Administration (FDA) is announcing the availability for comment of draft guidance for industry entitled ''Assessment of the Effects of Antimicrobial Drug Residues from Food of Animal Origin on the Human Intestinal Flora.'' This draft guidance is a revision of the guidance document no. 52 entitled ''Microbiological Testing of Antimicrobial Drug Residues in Food,'' which was implemented in 1996. In this draft guidance, the agency recommends a pathway approach for assessing the microbiological safety of antimicrobial drug residues in food, rather than the approach described in the 1996 version of the guidance. The agency's decision to revise this guidance is based on new information available to the agency.

DATES: You may submit written or electronic comments at any time. However, the agency would like to use these comments during the next meeting of the International Cooperation on Harmonisation of Technical Requirements for Registration of Veterinary Medicinal Products (VICH) Microbial Safety Task Force meeting. You should submit comments concerning this draft guidance by March 27, 2002 to ensure the incorporation of your comments at that meeting.

Submit written or electronic comments on the collection of information by February 25, 2002.

ADDRESSES: Submit written comments on the draft guidance to the Dockets Management Branch (HFA–305), Food and Drug Administration, 5630 Fishers Lane, rm. 1061, Rockville, MD 20852. Submit electronic comments to http://www.fda.gov/dockets/ecomments. All comments should be identified with the full title of the draft guidance and the docket number found in brackets in the heading of this document.

Submit written requests for single copies of the draft guidance to the Communications Staff (HFV–12), Center for Veterinary Medicine, Food and Drug Administration, 7500 Standish Place, Rockville, MD 20855. Send one self-

addressed adhesive label to assist the office in processing your requests. See the **SUPPLEMENTARY INFORMATION** section for electronic access to the guidance document.

FOR FURTHER INFORMATION CONTACT:

For information regarding the guidance document: Haydee Fernandez, Center for Veterinary Medicine (HFV–150), Food and Drug Administration, 7500 Standish Pl., Rockville, MD 20850, 301–827–6981, e-mail: afernand@cvm.fda.gov.

For information regarding information collections and the Paperwork Reduction Act: Denver Presley, Office of Information Resources Management (HFA–250), Food and Drug Administration, 5600 Fishers Lane, Rockville, MD 20857, 301–827–1462.

SUPPLEMENTARY INFORMATION:

I. Background

In the **Federal Register** of January 30, 1996 (61 FR 3043), FDA published a notice of availability for a guidance document entitled ''Microbiological Testing of Antimicrobial Drug Residues in Food'' (guidance no. 52). This guidance document stated that the agency would consider antimicrobial activity as a valid endpoint for establishing tolerances for antimicrobial drugs. The guidance also stated that antimicrobial residues present in food from food-producing animals should not cause any adverse effect on the ecology of the human intestinal microflora of consumers. The guidance identified antimicrobial drugs that would be exempt from additional microbiological testing and those that would warrant testing. The reasons for exempting certain antimicrobial drugs from additional microbiological testing included ''very low'' residues present in the food, residues with limited antimicrobial activity, and drugs with no adverse effects on the intestinal microflora at therapeutic doses.

Guidance no. 52 stated that ''very low'' levels of antimicrobials present in food would not perturb the intestinal microflora or select for resistant microorganisms and, therefore, would be ''safe'' under Section 512 of the Federal Food, Drug, and Cosmetic Act. Based on the best information available at that time, FDA believed that a maximum Acceptable Daily Intake (ADI) of 1.5 milligram (mg)/person/day of microbiologically active residues present in the food qualified as ''very low'' residues and should not produce adverse effects on the intestinal microflora. After CVM established the maximum ADI of 1.5 mg/person/day in the 1996 version of guidance no. 52, CVM staff publicly (e.g., at a workshop sponsored by FDA on September 20 and 21, 1999, in Rockville, MD) stated that this threshold would need to be re-evaluated when additional information was obtained on the adequacy of this number for different classes of antimicrobial drugs.

The guidance recommended that additional microbiological testing be performed for those antimicrobial drugs for which sponsors were seeking an ADI higher than 1.5 mg/person/day. The guidance document identified the following areas for which antimicrobial residues present a potential public health concern. These endpoints are: (1) Changes in the metabolic activity of the intestinal microflora, (2) changes in antimicrobial resistance patterns of the intestinal microflora, (3) changes in the colonization resistance properties (barrier effect) of the microflora, and (4) changes in the number of microorganisms and composition of the intestinal microflora. The guidance recommended that sponsors characterize the product, identify its microbiological activity, and monitor the appropriate microbiological endpoints in order to establish the antimicrobial no-observed effect level (NOEL). Because no validated model systems were available at that time, FDA announced its intention to validate model systems to evaluate the effect of low levels of antimicrobial drugs on endpoints of public health concern. The guidance also stated that in vitro microbiological inhibitory concentration data should not be submitted to establish the microbiological NOEL, because these data do not predict the level of drug residues that would elicit the potential public health concern. Sponsors were encouraged to consult with CVM to determine appropriate protocols before conducting studies.

In 1995, CVM funded two extramural research contracts to study the dose-response effects of antimicrobial drugs on human intestinal microflora endpoints that could be of public health concern. In a workshop sponsored by FDA on September 20 and 21, 1999, in Rockville, MD, information from the two research contracts was presented. Data on the effect of low doses of different classes of antimicrobials on several microbiological endpoints of the human intestinal microflora were discussed. After reviewing and discussing the data, FDA concluded that the threshold ADI discussed in guidance no. 52 is not appropriate for all classes of antimicrobials. Different classes of antimicrobials affect, to different degrees, microbiological endpoints that could be of public health concern. Therefore, FDA has decided to modify guidance no. 52 to recommend that sponsors use a pathway approach (described in the draft guidance) for addressing human food safety of antimicrobial drug residues, rather than the approach described in the 1996 version of the guidance. The scientific rationale for this decision is provided in the appendix of the draft guidance document.

Guidance no. 52 may be further revised at a later date according to the recommendations from VICH concerning proper tests and model systems and standard protocols for addressing endpoints of public health concern. VICH also needs to address how to calculate ADIs using NOELs obtained from microbiological testing models. However, the agency believes that it is in the best interest of the regulated industry and public health to revise guidance no. 52 now, instead of waiting for the VICH recommendations to be completed.

This level 1 guidance is being issued consistent with FDA's good guidance practices regulation (21 CFR 10.115). This draft guidance, when finalized, will represent the agency's current thinking with regard to the approach that should be used to assess the microbiological safety of antimicrobial drug residues in food of animal origin. It does not create or confer any rights for or on any person and does not operate to bind FDA or the public. An alternate method may be used as long as it satisfies the requirements of applicable statutes and regulations.

II. Paperwork Reduction Act of 1995

Under the Paperwork Reduction act of 1995 (the PRA) (44 U.S.C. 3501–3520), Federal agencies must obtain approval from the Office of Management and Budget (OMB) for each collection of information they conduct or sponsor. ''Collection of information'' is defined in 44 U.S.C. 3502(3) and 5 CFR 1320.3(c) and includes agency requests or requirements that members of the public submit reports, keep records, or provide information to a third party. Section 3506(c)(2)(A) of the PRA (44 U.S.C. 3506(c)(2)(A)) requires Federal agencies to provide a 60-day notice in the **Federal Register** concerning each proposed collection of information, including each proposed collection of an existing collection of information, before submitting the collection to OMB for approval. To comply with this requirement, FDA is publishing a notice of the proposed collection of information set forth in this document.

With respect to the following collection of information, FDA invites comments on: (1) Whether the proposed collection of information is necessary for the proper performance of FDA's functions, including whether the information will have practical utility; (2) the accuracy of FDA's estimate of the burden of the proposed collection of information, including the validity of the methodology and assumptions used; (3) ways to enhance the quality, utility, and clarity of the information to be collected; and (4) ways to minimize the burden of the collection of information on respondents, including through the use of automated collection techniques, when appropriate, and other forms of information technology.

Title: Assessment of the Effects of Antimicrobial Drug Residues from Food of Animal Origin on the Human Intestinal Flora

Description: Sponsors of new animal drugs must meet certain statutory requirements for new animal drug approval under section 512 of the Federal Food, Drug, and Cosmetic Act (21 U.S.C. 360b). Among other things, the sponsor must demonstrate that the use of the drug is safe. Thus, when CVM reviews new animal drug applications for drugs that will be used in food-producing animals, it must determine whether residues of the drug that may remain in human food derived from those animals would be harmful to humans. One possible harmful effect of residues of antimicrobial drugs that CVM considers in this determination is the possible effect of residues on human intestinal flora.

This draft guidance document describes the recommended pathway approach for assessing such effects. An assessment of the safety of antimicrobial drug residues in food is a major issue that should be addressed by the sponsor of a new animal drug. For residues determined to have no antimicrobial activity against representatives of the human intestinal flora, an ADI should be calculated based on traditional toxicology studies. The burden hours required are reported and approved under OMB Control No. 0910–0032. However, the draft guidance recommends that additional information be provided for certain drugs. This additional information should be provided if an assessment of microbiological safety determines that a new animal drug produces residues in foods that are microbiologically active in the human colon. The likely respondents to this collection of information are sponsors of antimicrobial new animal drugs that will be used in food-producing animals.

FDA estimates the burden of this collection of information as follows:

TABLE 1.—ESTIMATED ANNUAL REPORTING BURDEN[1]

Guidance	No. of Respondents	Annual Frequency per Response	Total Annual Responses	Hours per Response	Total Hours
Assessments (including studies) of safety of antimicrobial drug residues that are microbiologically active in the human colon	5	1	5	14,110	70,550

[1] There are no capital costs or operating and maintenance costs associated with this collection of information.

The estimates in table 1 of this document resulted from discussions with sponsors of new animal drugs. The estimated burden includes studies, analysis of data, and writing the assessment. The number of respondents provided is based on current experience, however, the number may change in the future.

III. Comments

This draft guidance document is being distributed for comment purposes only and is not intended for implementation at this time. Interested persons may submit to the Dockets Management Branch (address above) written or electronic comments regarding this draft guidance document. Submit written or electronic comments by March 27, 2002 to ensure adequate consideration by the VICH Microbial Safety Task Force and in the development of the final guidance. Two copies of any comments are to be submitted, except that individuals may submit one copy. Comments are to be identified with the docket number found in brackets in the heading of this document. A copy of the draft guidance and received comments are available for public examination in the Dockets Management Branch between 9 a.m. and 4 p.m., Monday through Friday.

Submit written comments concerning the information collection requirements to the Dockets Management Branch by March 27, 2002. A copy of the document and received comments are available for public examination in the Dockets Management Branch between 9 a.m. and 4 p.m., Monday through Friday.

IV. Electronic Access

Electronic comments may be submitted electronically on the Internet at http://www.fda.gov/dockets/ecomments. Once on this Internet site, select [Insert Docket Number for this publication] ''Assessment of the Effects of Antimicrobial Drug Residues from Food of Animal Origin on the Human Intestinal Flora'' and follow the directions. Copies of the draft guidance entitled ''Assessment of the Effects of Antimicrobial Drug Residues from Food of Animal Origin on the Human Intestinal Flora'' may be obtained on the Internet from the CVM home page at http://www.fda.gov/cvm.

Dated: December 18, 2001.

Margaret M. Dotzel,

Associate Commissioner for Policy.

[FR Doc. 01–31713 Filed 12–26–01; 8:45 am]

BILLING CODE 4160–01–S

DEPARTMENT OF HEALTH AND HUMAN SERVICES

Indian Health Service

Proposed Collection; Comment Request

AGENCY: Indian Health Service, HHS.

ACTION: Request for public comment: 60-day proposed collection; Hoz'ho'nii: An intervention to increase breast and cervical cancer screening among Navajo women.

SUMMARY: In compliance with section 3506(c)(2)(A) of the Paperwork Reduction Act of 1995, to provide a 60-day advance opportunity for public comment on proposed information collection projects, the Indian Health Service (IHS) is publishing for comments a summary of a proposed information collection to be submitted to the Office of Management and Budget (OMB) for review.

Proposed Collection: Title: Hoz'ho'nii: An Intervention to Increase Breast and Cervical Cancer Screening Among Navajo Women. Type of Information Collection Request: New. Form Number: None. Need and Use of the Information Collection: The information is needed to evaluate a culturally appropriate education outreach program designed to increase breast and cervical cancer screening among Navajo women ages 20 and older. The purpose is to identify barriers that may prevent Navajo women from participating in breast and cervical cancer screening by comparing changes in knowledge, attitudes, and behaviors of three study groups; educational outreach only, education outreach plus chapter-based clinic, and a control group. Results will be used to assess the impact of the impact of the educational outreach program, improve breast and cervical cancer screening, and to guide the IHS and Tribal health programs in the delivery of culturally appropriate intervention to reduce mortality rates from breast and cervical cancer among Navajo women. Affected Public: Individuals. Type of Respondents: Individuals.

The table below provides the estimated burden response for this information collection:

ESTIMATED BURDEN RESPONSE TABLE

Data collection instrument	Estimated number of respondents	Responses per respondent	Average burden hour per response*	Total annual burden hrs
KAB Pretest	450	1	0.42 hr (25 minutes)	188.0
KAB Post test	450	1	0.42 hr (25 minutes)	188.0
Interviews	30	1	0.25 hr (15 minutes)	8.0
Total	930	1		384.0

*For ease of understanding, burden hours are also provided in actual minutes.
There are no Capital Costs, Operating Costs and/or Maintenance Costs to report for this information collection.

Request for Comments: Your written comments and/or suggestions are invited on one or more of the following points: (1) Whether the information collection activity is necessary to carry out an agency function; (b) whether the agency processes the information collected in a useful and timely fashion; (c) the accuracy of public burden estimate (the estimated amount of time needed for individual respondents to provide the requested information); (d) whether the methodology and assumptions used to determine the estimate are logical; (e) ways to enhance the quality, utility, and clarity of the information being collected; and (f) ways to minimize the public burden through the use of automated, electronic, mechanical, or other technological collection techniques or other forms of information technology.

Send Comments and Requests For Further Information: Send your written comments, requests for more information on the proposed collection, or requests to obtain a copy of the data collection instrument(s) and instructions to: Mr. Lance Hodahkwen, Sr., M.P.H., IHS Reports Clearance Officer, 12300 Twinbrook Parkway, Suite 450, Rockville, MD 20852.1601, call non-toll free (301) 443–5938, send via facsimile to (301) 443–1522, or send your E-mail requests, comments, and return address to: Ihodahkw@hqe.ihs.gov.

Comment Due Date: Your comments regarding this information collection are best assured of having their full effect if received within 60-days of the date of this publication.

Dated: December 14, 2001.

Michael H. Trujillo,

Assistant Surgeon General, Director, Indian Health Service.

[FR Doc. 01–31712 Filed 12–26–01; 8:45 am]

BILLING CODE 4160–16–M

DEPARTMENT OF HEALTH AND HUMAN SERVICES

National Institutes of Health

National Cancer Institute; Notice of Meeting

Pursuant to section 10(a) of the Federal Advisory Committee Act, as amended (5 U.S.C. Appendix 2), notice is hereby given of a meeting of the National Cancer Institute Director's Consumer Liaison Group.

The meeting will be open to the public, with attendance limited to space available. Individuals who plan to attend and need special assistance, such as sign language interpretation or other reasonable accommodations, should notify the Contact Person listed below in advance of the meeting.

Name of Committee: National Cancer Institute Director's Consumer Liaison Group.

Date: January 22, 2001.

Time: 2 p.m. to 4 p.m.

Agenda: To follow up on the Survivorship Forums and receive reports from Working Groups.

Place: National Cancer Institute, 6116 Executive Boulevard, Suite 300C, Room 3068 A, Rockville, MD 20852 (Telephone Conference Call).

Contact Person: Elaine Lee, Executive Secretary, Office of Liaison Activities, National Institutes of Health, National Cancer Institute, 6116 Executive Boulevard, Suite 300 C, Bethesda, MD 20892, 301/594–3194.

Any interested person may file written comments with the committee by forwarding the statement to the Contact Person listed on this notice. The statement should include the name, address, telephone number and when applicable, the business or professional affiliation of the interested person.

Information is also available on the Institute's/Center's home page: *deainfo.nci.nih.gov/advisory/dclg/delg.htm,* where an agenda and any additional information for the meeting will be posted when available.

(Catalogue of Federal Domestic Assistance Program Nos. 93.392, Cancer Construction; 93.393, Cancer Cause and Prevention Research; 93.394, Cancer Detection and Diagnosis Research; 93.395, Cancer Treatment Research; 93.396, Cancer Biology Research; 93.397, Cancer Centers Support; 93.398, Cancer Research Manpower; 93.399, Cancer Control, National Institutes of Health, HHS)

Dated: December 14, 2001.

LaVerne Y. Stringfield,

Director, Office of Federal Advisory Committee Policy.

[FR Doc. 01–31704 Filed 12–26–01; 8:45 am]

BILLING CODE 4140–01–M

DEPARTMENT OF HEALTH AND HUMAN SERVICES

National Institutes of Health

National Cancer Institute; Notice of Closed Meeting

Pursuant to section 10(d) of the Federal Advisory Committee Act, as amended (5 U.S.C. Appendix 2), notice

is hereby given of the following meeting.

The meeting will be closed to the public in accordance with the provisions set forth in sections 552b(c)(4) and 552(c)(6), Title 5 U.S.C., as amended. The grant applications and the discussion could disclose confidential trade secrets or commercial property such as patentable material, and personal information concerning individuals associated with the grant applications, the disclosure of which would constitute a clearly unwarranted invasion of personal privacy.

Name of Committee: National Cancer Institute Special Emphasis Panel. Review of program project grant application.

Date: January 10, 2002.

Time: 12 pm to 4 pm.

Agenda: To review and evaluate grant applications.

Place: 6116 Executive Blvd. Rockville, MD 20892 (Telephone Conference Call).

Contact Person: Virginia P. Wray, PhD, Scientific Review Administrator Grants Review Branch Division of Extramural Activities National Cancer Institute, National Institutes of Health, 6116 Executive Boulevard, Room 8125, Rockville, MD 20892–7405 301/496–9236.

(Catalogue of Federal Domestic Assistance Program Nos. 93.392, Cancer Construction; 93.393, Cancer Cause and Prevention Research; 93.394, Cancer Detection and Diagnosis Research; 93.395, Cancer Treatment Research; 93.396, Cancer Biology Research; 93.397, Cancer Centers Support; 93.398, Cancer Research Manpower; 93.399, Cancer Control, National Institutes of Health, HHS)

Dated: December 13, 2001.

LaVerne Y. Stringfield,

Director, Office of Federal Advisory Committee Policy.

[FR Doc. 01–31709 Filed 12–26–01; 8:45 am]

BILLING CODE 4140–01–M

DEPARTMENT OF HEALTH AND HUMAN SERVICES

National Institutes of Health

National Institute of Neurological Disorders and Stroke; Notice of Closed Meeting

Pursuant to section 10(d) of the Federal Advisory Committee Act, as amended (5 U.S.C. Appendix 2), notice is hereby give of the following meeting.

The meeting will be closed to the public in accordance with the provisions set forth in sections 552b(c)(4) and 552b(c)(6), Title 5 U.S.C., as amended. The grant applications and the discussions could disclose confidential trade secrets or commercial property such as patentable material, and personal information concerning individuals associated with the grant applications, the disclosure of which would constitute a clearly unwarranted invasion of personal privacy.

Name of Committee: National Institute of Neurological Disorders and Stroke Special Emphasis Panel.

Date: January 10, 2002.

Time: 8:30 am to 5 pm.

Agenda: To review and evaluate grant applications.

Place: Bethesda Marriott, 5151 Pooks Hill Road, Bethesda, MD 20892.

Contact Person: Andrea Sawczuk, PhD., Scientific Review Administrator, Scientific Review Branch, NINDS/NIH/DHHS, Neuroscience Center, 6001 Executive Blvd., Suite 3208, MSC 9529, Bethesda, MD 20892–9529 301–496–0660.

(Catalogue of Federal Domestic Assistance Program Nos. 93.853, Clinical Research Related to Neurological Disorders; 93.854, Biological Basis Research in the Neuroscience, National Institutes of Health, HHS).

Dated: December 14, 2001.

LaVerne Y. Stringfield,

Director, Office of Federal Advisory Committee Policy.

[FR Doc. 01–31705 Filed 12–26–01; 8:45 am]

BILLING CODE 4140–01–M

DEPARTMENT OF HEALTH AND HUMAN SERVICES

National Institutes of Health

National Institute of Child Health and Human Development; Notice of Closed Meeting

Pursuant to section 10(d) of the Federal Advisory Committee Act, as amended (5 U.S.C. Appendix 2), notice is hereby given of the following meeting.

The meeting will be closed to the public in accordance with the provisions set forth in sections 552b(c)(4) and 552b(c)(6), Title 5 U.S.C., as amended. The grant applications and the discussions could disclose confidential trade secrets or commercial property such as patentable material, and personal information concerning individuals associated with the grant applications, the disclosure of which would constitute a clearly unwarranted invasion of personal privacy.

Name of Committee: National Institute of Child Health and Human Development Special Emphasis Panel.

Date: December 12, 2001.

Time: 9 am to 5 pm.

Agenda: To review and evaluate grant applications.

Place: Holiday Inn Chevy Chase, 5520 Wisconsin Avenue, Chevy Chase, MD 20815.

Contact Person: Gopal M. Bhatnagar, PhD., Scientific Review Administrator, Division of Scientific Review, National Institute of Child Health, and Human Development, National Institutes of Health, PHS, DHHS, 9000 Rockville Pike, 6100 Bldg., Room 5E01, Bethesda, MD 20892, (301) 496–1485.

This notice is being published less than 15 days prior to the meeting due to the timing limitations imposed by the review and funding cycle.

(Catalogue of Federal Domestic Assistance Program Nos. 93.209, Contraception and Infertility Loan Repayment Program; 93.864, Population Research; 93.865, Research for Mothers and Children; 93.929, Center for Medical Rehabilitation Research, National Institutes of Health, HHS)

Dated: December 12, 2001.

LaVerne Y. Stringfield,

Director, Office of Federal Advisory Committee Policy.

[FR Doc. 01–31706 Filed 12–26–01; 8:45 am]

BILLING CODE 4140–01–M

DEPARTMENT OF HEALTH AND HUMAN SERVICES

National Institutes of Health

National Library of Medicine; Notice of Meeting

Pursuant to section 10(d) of the Federal Advisory Committee Act, as amended (5 U.S.C. Appendix 2), notice is hereby given of the following meeting.

The meeting will be open to the public as indicated below, with attendance limited to space available. Individuals who plan to attend and need special assistance, such as sign language interpretation or other reasonable accommodations, should notify the Contact Person listed below in advance of the meeting.

The portions of the meeting devoted to the review and evaluation of journals for potential indexing by the National Library of Medicine will be closed to the public in accordance with the provisions set forth in section 552b(c)(9)(B), Title U.S.C., as amended. Premature disclosure of the titles of the journals as potential titles to be indexed by the National Library of Medicine, the discussions, and the presence of individuals associated with these publications could significantly frustrate the review and evaluation of individual journals.

Name of Committee: Literature Selection Technical Review Committee.

Date: February 7–8, 2002.

Open: February 7, 2002, 9 am to 11 am.

Agenda: Administrative reports and program developments.

Place: National Library of Medicine, 8600 Rockville Pike, Board Room, Bethesda, MD 20894.

Closed: February 7, 2002, 11 am to 5 pm.

Agenda: To review and evaluate journals as potential titles to be indexed by the National Library of Medicine.

Place: National Library of Medicine, 8600 Rockville Pike, Board Room, Bethesda, MD 20894.

Closed: February 8, 2002, 8:30 am to 2 pm.

Agenda: To review and evaluate journals as potential titles to be indexed by the National Library of Medicine.

Place: National Library of Medicine, 8600 Rockville Pike, Board Room, Bethesda, MD 20894.

Contact Person: Sheldon Kotzin, BA, Chief, Bibliographic Services Division, Division of Library Operations, National Library of Medicine, 8600 Rockville Pike, Bldg 38A/ Room 4N419, Bethesda, MD 20894.

(Catalogue of Federal Domestic Assistance Program No. 93.879, Medical Library Assistance, National Institutes of Health, HHS)

Dated: December 14, 2001.

LaVerne Y. Stringfield,

Director, Office of Federal Advisory Committee Policy, NIH.

[FR Doc. 01–31703 Filed 12–26–01; 8:45 am]

BILLING CODE 4140–01–M

DEPARTMENT OF HEALTH AND HUMAN SERVICES

National Institutes of Health

Office of the Director, National Institutes of Health; Notice of Meeting

Pursuant to section 10(a) of the Federal Advisory Committee Act, as amended (5 U.S.C. Appendix 2), notice is hereby given of a meeting of the Peer Review Oversight Group.

The meeting will be open to the public, with attendance limited to space available. Individuals who plan to attend and need special assistance, such as sign language interpretation or other reasonable accommodations, should notify the Contact Person listed below in advance of the meeting.

Name of Committee: Peer Review Oversight Group.

Date: February 4–5, 2002.

Time: February 4, 2002, 8:30 am to 4 pm.

Agenda: To review and evaluate the agenda for this initial meeting of the Committee will include an update on NIH extramural reinvention activities and a discussion of the NIH peer review system.

Place: 2 Democracy Plaza, 6711 Democracy Boulevard, Conference Center, Salon #2, Bethesda, MD 20892.

Time: February 5, 2002, 8:30 AM to Adjournment.

Agenda: To review and evaluate the agenda for this initial meeting of the Committee will include an update on NIH extramural reinvention activities and a discussion of the NIH peer review system.

Place: 2 Democracy Plaza, 6711 Democracy Boulevard, Conference Center, Salon #2, Bethesda, MD 20892.

Contact Person Tony Demsey, Executive Secretary, Office of Extramural Research, National Institutes of Health, Building 1, Room 152, 9000 Rockville Pike, Bethesda, MD 20892, 301–496–5127.

In the interest of security, NIH has instituted stringent procedures for entrance into the building by non-government employees. Persons without a government I.D. will need to show a photo I.D. and sign-in at the security desk upon entering the building.

Information is also available on the Institute's/Center's home page: grants.nih.gov/grants/peer/peer.htm#prog, where an agenda and any additional information for the meeting will be posted when available.

(Catalogue of Federal Domestic Assistance Program Nos. 93.14, Intramural Research Training Award; 93.187, Undergraduate Scholarship Program for Individuals from Disadvantaged Backgrounds; 93.22, Clinical Research Loan Repayment Program for Individuals from Disadvantaged Backgrounds; 93.232, Loan Repayment Program for Research Generally; 93.39, Academic Research Enhancement Award; 93.936, NIH Acquired Immunodeficiency Syndrome Research Loan Repayment Program, National Institutes of Health, HHS)

Dated: December 12, 2001.

LaVerne Y. Stringfield,

Director, Office of Federal Advisory Committee Policy.

[FR Doc. 01–31708 Filed 12–26–01; 8:45 am]

BILLING CODE 4140–01–M

DEPARTMENT OF HEALTH AND HUMAN SERVICES

National Institutes of Health

Center for Scientific Review; Notice of Closed Meetings

Pursuant to section 10(d) of the Federal Advisory Committee Act, as amended (5 U.S.C. Appendix 2), notice is hereby given of the following meetings.

The meetings will be closed to the public in accordance with the provisions set forth in sections 552b(c)(4) and 552b(c)(6), Title 5 U.S.C., as amended. The grant applications and the discussions could disclose confidential trade secrets or commercial property such as patentable material, and personal information concerning individuals associated with the grant applications, the disclosure of which would constitute a clearly unwarranted invasion of personal privacy.

Name of Committee: Center for Scientific Review Special Emphasis Panel.

Date: December 17, 2001.

Time: 11 am to 1 pm.

Agenda: To review and evaluate grant applications.

Place: NIH, Rockledge 2, Bethesda, MD 20892, (Telephone Conference Call).

Contact Person: Gloria B. Levin, Phd., Scientific Review Administrator, Center for Scientific Review, National Institutes of Health, 6701 Rockledge Drive, Room 3166, MSC 7848, Bethesda, MD 20892, (301) 435–1017, leving@csr.nih.gov.

This notice is being published less than 15 days prior to the meeting due to the timing limitations imposed by the review and funding cycle.

Name of Committee: Center for Scientific Review Emphasis Panel.

Date: January 4, 2002.

Time: 2 pm to 4:30 pm.

Agenda: To review and evaluate grant application.

Place: NIH, Rockledge 2, Bethesda, MD 20892, (Telephone Conference Call).

Contact Person: Richard Marcus, PhD, Scientific Review Administrator, Center for Scientific Review, National Institutes of Health, 6701 Rockledge Drive, Room 5168, MSC 7844, Bethesda, MD 20892, 301–435–1245, richard.marcus@nih.gov.

(Catalogue of Federal Domestic Assistance Program Nos. 93.306, Comparative Medicine, 93.306, 93.333, Clinical Research, 93.333, 93.337, 93.393–93.396, 93.837–93.844, 93.846–93.878, 93.893, National Institutes of Health, HHS)

Dated: December 12, 2001.

LaVerne Y. Stringfield,

Director, Office of Federal Advisory Committee Policy.

[FR Doc. 01–31707 Filed 12–26–01; 8:45 am]

BILLING CODE 4140–01–M

DEPARTMENT OF THE INTERIOR

Fish and Wildlife Service

Letter of Authorization to Take Marine Mammals

AGENCY: U.S. Fish and Wildlife Service, Interior.

ACTION: Notice of issuance of Letters of Authorization to take marine mammals incidental to oil and gas industry activities.

SUMMARY: In accordance with section 101(a)(5)(A) of the Marine Mammal Protection Act of 1972, as amended, and the U.S. Fish and Wildlife Service implementing regualtions [50 CFRs 18.27(f)(3)], notice is hereby given that the following Letters of Authorization to take polar bears incidental to oil and gas industry exploration activities in the Beaufort Sea and adjacent northern coast of Alaska have been issued to the following companies:

Company	Activity	Location	Date issued
Phillips Alaska, Inc	Exploration	Sunrise #1	Nov. 8, 2001.
Phillips Alaska, Inc	Exploration	Cirque #3 and #4	Nov. 8, 2001.
Phillips Alaska, Inc	Exploration	Anfros #1	Nov. 8, 2001.
Phillips Alaska, Inc	Exploration	Spark #2–#5	Nov. 8, 2001.
Phillips Alaska, Inc	Exploration	Cayman #1	Nov. 8, 2001.
Phillips Alaska, Inc	Exploration	Alpine West #1	Nov. 8, 2001.
Phillips Alaska, Inc	Exploration	Moose's Tooth A&C	Nov. 8, 2001.
Phillips Alaska, Inc	Exploration	Rendezvous B	Nov. 8, 2001.
Phillips Alaska, Inc	Exploration	Clover B	Nov. 8, 2001.
Phillips Alaska, Inc	Exploration	Lookout A	Nov. 8, 2001.
Phillips Alaska, Inc	Exploration	Sunrise #3	Nov. 8, 2001.
Phillips Alaska, Inc	Exploration	Sunrise #2	Nov. 8, 2001.
Phillips Alaska, Inc	Exploration	Callisto #1	Nov. 8, 2001.
Phillips Alaska, Inc	Exploration	Ganymede #1	Nov. 9, 2001.
Phillips Alaska, Inc	Exploration	Nanuq #5	Nov. 9, 2001.
Phillips Alaska, Inc	Exploration	Grandview #1	Nov. 9, 2001.
Phillips Alaska, Inc	Exploration	Lookout #2	Nov. 9, 2001.
Phillips Alaska, Inc	Exploration	Hunter A	Nov. 9, 2001.
Phillips Alaska, Inc	Exploration	Hunter #2	Nov. 9, 2001.
Anadarko Petroleum Corp	Exploration	Whiskey Gulch A and B	Nov. 9, 2001.

CONTACT: Mr. John W. Bridges at the U.S. Fish and Wildlife Service, Marine Mammals Management Office, 1011 East Tudor Road, Anchorage, Alaska 99503, (800) 362–5148 or (907) 786–3810.

SUPPLEMENTARY INFORMATION: The Letter of Authorization is issued in accordance with U.S. Fish and Wildlife Service Federal Rules and Regulations ''Marine Mammals; Incidental Take During Specified Activities (65 FR 16828; March 30, 2000).''

Dated: November 26, 2001.

David B. Allen,

Regional Director.

[FR Doc. 01–31711 Filed 12–26–01; 8:45 am]

BILLING CODE 4310–55–M

DEPARTMENT OF THE INTERIOR

Bureau of Indian Affairs

Receipt of Petitions for Federal Acknowledgment of Existence as an Indian Tribe

AGENCY: Bureau of Indian Affairs, Interior.

ACTION: Notice.

This notice is published in the exercise of authority delegated by the Secretary of the Interior to the Assistant Secretary—Indian Affairs by 209 DM 8.

Pursuant to 25 CFR 83.9(a) notice is hereby given that the following groups have each filed a letter of intent to petition for acknowledgment by the Secretary of the Interior that the group exists as an Indian tribe. Each letter of intent was received by the Bureau of Indian Affairs (BIA) on the date indicated, and was signed by members of the group's governing body.

Lenape Nation, c/o Mr. Robert Ruth, 115 Hancock Avenue, Norristown, Pennsylvania 19401. May 16, 2000.

Avogel Nation of Louisiana, c/o Mr. Terryl M. Francisco, 517 Overton Street, Marksville, Louisiana 71351. November 13, 2000.

Little Owl Band of Central Michigan Indians, c/o Mr. Raymond Dowell, P.O. Box 244, Sidney, Michigan 48885–0244. November 27, 2000.

The Western Pequot Tribal Nation of New Haven, c/o Mr. Samuel Ephraim Thomas, P.O. Box 27219, West Haven, Connecticut 06516. November 27, 2000.

Rappahannock Indian Tribe, Inc., c/o Mr. Nokomis F. Lemons, 6754 Tidewater Terrace, Chance, Virginia 22438. January 31, 2001.

Lower Eastern Ohio Mekojay Shawnee, c/o Mr. Russell Sharp, 2902 U.S. Highway 22 West, Wilmington, Ohio 45177. March 5, 2001.

The Chickamauga Notowega Creeks, c/o Ms. Govinda Sanyal, 85 Regis Drive, Staten Island, New York 10314. March 5, 2001.

Avogel, Okla Tasannuk, Tribe/Nation, c/o Mr. Miburn John Mayeux, P.O. Box 1007, Duson, Louisiana 70529–1007. March 19, 2001.

Schaghticoke Indian Tribe, c/o Mr. Allan Russell, P.O. Box 111, Kent, Connecticut 06757. May 11, 2001.

Calaveras Band of Miwuk Indians, c/o Mr. Charles Wilson, P.O. Box 899, West Point, California 95255. July 31, 2001.

Chickahominy Indians, Eastern Division, Inc., c/o Mr. Marvin D. Bradby, 12111 Indian Hill Lane, Providence Forge, Virginia 23140. September 6, 2001.

Xolon Salinan Tribe, c/o Ms. Donna Haro, P.O. Box 5337, Bay Point, California 94565. September 18, 2001.

Phoenician Cherokee II—Eagle Tribe of Sequoyah, c/o Mr. Albert L. Bynum, 504 Brewton Street, Gadsden, Alabama 35903. September 18, 2001.

Nansemond Indian Tribal Association, c/o Mr. Barry W. Bass, P.O. Box 2095, Portsmouth, Virginia 23702. September 20, 2001.

Schaghticoke Tribe, c/o Ms. Mildred Reed Crosley, 382 Connecticut Avenue, Bridgeport, Connecticut 06607. September 27, 2001.

United Cherokee Intertribal, c/o Ms. Gina Williamson, 5005 Elizabeth Street, Guntersville, Alabama 35976. November 8, 2001.

This is a notice of receipt of these letters of intent to petition and does not constitute notice that the petitions are under active consideration. Notice of active consideration will be sent by mail to the petitioner and other interested parties at the appropriate time.

Under Section 83.9(a) of the Federal regulations, third parties may submit factual and/or legal arguments in support of or in opposition to each group's petition and may request to be kept informed of all general actions affecting the petition. Third parties should provide copies of their submissions to the petitioner. Any information submitted will be made available on the same basis as other information in the BIA's files. The petitioner will be provided an opportunity to respond to such submissions prior to a final determination regarding the petitioner's status.

The petitions may be examined, by appointment, in the Department of the Interior, BIA, Branch of Acknowledgment and Research, MS: 4660–MIB, 1849 C Street, NW.,

Washington, DC 20240; Telephone: (202) 208–3592.

Dated: December 11, 2001.

Neal A. McCaleb,

Assistant Secretary—Indian Affairs.

[FR Doc. 01–31682 Filed 12–26–01; 8:45 am]

BILLING CODE 4310–02–P

DEPARTMENT OF THE INTERIOR

Bureau of Land Management

[AK–962–1410–HY–P; F–14940–A]

Alaska Native Claims Selection

AGENCY: Bureau of Land Management, Interior.

ACTION: Notice of modified decision.

SUMMARY: As required by 43 CFR 2650.7(d), notice is hereby given that the decision approving lands for conveyance to Dinyea Corporation, notice of which was published in the **Federal Register** on December 23, 1996, 61 FR 67573, is modified by changing the uses allowed on site easement EIN 1 D3. Notice of the modified decision will also be published four (4) times in the Fairbanks Daily News-Miner.

DATES: The time limits for filing an appeal are:

1. Any party claiming a property interest which is adversely affected by the decision shall have until January 28, 2002 to file an appeal.

2. Parties receiving service of the decision by certified mail shall have 30 days from the date of receipt to file an appeal.

Parties who do not file an appeal in accordance with the requirements of 43 CFR part 4, subpart E, shall be deemed to have waived their rights. Except as modified, the decision, notice of which was given December 23, 1996, is final.

ADDRESSES: A copy of the decision may be obtained from: Bureau of Land Management, Alaska State Office, 222 West Seventh Avenue, #13, Anchorage, Alaska 99513–7599.

FOR FURTHER INFORMATION CONTACT: Christy Favorite, 907–271–5656, or by e-mail at *Christy_Favorite@ak.blm.gov.*

Christy Favorite,

Land Law Examiner, Branch of ANCSA Adjudication.

[FR Doc. 01–31757 Filed 12–26–01; 8:45 am]

BILLING CODE 4310–$$–P

DEPARTMENT OF THE INTERIOR

Bureau of Land Management

[AZ–070–02–1232–EA, SRP–070–02–06&07]

Closure of Selected Public Lands

AGENCY: Bureau of Land Management, Interior.

ACTION: Temporary closure of selected public lands in La Paz County, Arizona, during the operation of the 2002 Whiplash Parker 200 and Parker 400 Desert Races.

SUMMARY: The Bureau of Land Management Lake Havasu Field Office announces the temporary closure of selected public lands under its administration in La Paz County, Arizona. This action is being taken to help ensure public safety and prevent unnecessary environmental degradation during the official permitted running of the 2002 Whiplash Parker 200 & 400 Desert Races.

DATES: Parker 200, January 19, through January 20, 2002; Parker 400, January 24, through January 26, 2002.

Specific restrictions and closure periods are as follows:

1. The PARKER 200 DESIGNATED COURSE is identical to the Parker 400 designated course, but limited to the area west of the CAP Canal and east of the Colorado River Indian Tribes Reservation boundary. The course is closed to public use from 6:00 p.m. Friday, January 18, 2002, to 6:00 p.m. Sunday, January 20, 2002.

2. The PARKER 400 DESIGNATED COURSE is comprised of BLM lands, roads and ways located two miles either side of:

(a) Shea Road from the eastern boundary of the Colorado River Indian Tribes Reservation to the junction with Swansea Road, and two miles either side of Swansea Road from its junction with Shea Road to the eastern bank of the Central Arizona Project Canal.

(b) Swansea Road from its junction with Shea Road, to the Four Corners intersection continuing to the ''Midway'' intersection.

(c) ''Midway'' intersection on the power line road east to Cunningham Wash.

(d) South on the OHV route paralleling Cunningham Wash to the intersection of Graham Well and the unpaved maintained road.

(e) The unpaved maintained road to the Bouse ''Y''.

(f) The Bouse ''Y'' paralleling east side of unpaved maintained road to the ''Midway'' intersection.

(g) The power line road west along the East Cactus Plain Wilderness Area boundary to Osborne Wash.

(h) Osborne Wash west, crossing the CAP Canal, following the Cactus Plain WSA boundary south of Shea Road and the Shea Road Pit Area.

(i) Osborne Wash west to the eastern boundary of the Colorado River Indian Tribes reservation is closed to public use from 6 a.m. Friday, January 25, 2002, to 6 p.m. Sunday, January 27, 2002.

3. The entire designated race course is closed to all vehicles except authorized and emergency vehicles.

4. Vehicle parking or stopping in areas affected by the closure is prohibited except in the designated spectator areas. Emergency parking for brief periods of time is permitted on roads open for public use.

5. Spectator viewing (on public land) is limited to the two designated spectator areas located near the Bouse ''Y'', and the east side of the unpaved maintained road between the Bouse ''Y'' and the CAP crossing, four miles north of Bouse, Arizona.

6. The following regulations will be in effect for the duration of the closure. Unless otherwise authorized, no person shall:

a. Camp in any area outside of the designated spectator areas.

b. Enter any portion of the race course or any wash located within the race course, including all portions of Osborne Wash.

c. Spectate or otherwise be located outside of the designated spectator or pit areas.

d. Firearms must be unloaded and cased, and are not to be used during the closure.

e. Fireworks are prohibited.

f. Operate any vehicle (other than registered event vehicles), including an off-highway vehicle (OHV), which is not legally registered for street and highway operation, including operation of such a vehicle in spectator viewing areas, along the race course, and in designated pit areas.

g. Park any vehicle in violation of posted restrictions, or in such a manner as to obstruct or impede normal or emergency traffic movement or the parking of other vehicles, create a safety hazard, or endanger any person, property or feature. Vehicles so parked are subject to citation, removal and impoundment at the owner's expense.

h. Take any vehicle through, around or beyond a restrictive sign, recognizable barricade, fence or traffic control barrier.

i. Fail to keep their site free of trash and litter during the period of

occupancy, or fail to remove all personal equipment, trash, and litter upon departure.

j. Violate quiet hours by causing an unreasonable noise as determined by the authorized officer between the hours of 10:00 p.m. and 6:00 a.m. Mountain Standard Time.

k. Allow any pet or other animal in their care to be unrestrained at any time.

Signs and maps directing the public to the designated spectator areas will be provided by the Bureau of Land Management or the event sponsor. The above restrictions do not apply to emergency vehicles and vehicles owned by the United States, the State of Arizona, or La Paz County. Vehicles under permit for operation by event participants must follow the race permit stipulations. Authority for closure of public lands is found in 43 CFR 8340, Subpart 8341; 43 CFR 8360, Subpart 8364.1; and 43 CFR 8372. Persons who violate this closure order are subject to arrest and, upon conviction, may be fined not more than $100,000 and/or imprisoned for not more than 12 months.

FOR FURTHER INFORMATION CONTACT: Bryan Pittman, District Law Enforcement Ranger, or Myron McCoy, Outdoor Recreation Planner, BLM Lake Havasu Field Office, 2610 Sweetwater Avenue, Lake Havasu City, Arizona 86406, (928) 505–1200.

Dated: November 30, 2001.

Donald Ellsworth,

Field Manager, Lake Havasu Field Office.

[FR Doc. 01–31756 Filed 12–26–01; 8:45 am]

BILLING CODE 4310–32–P

DEPARTMENT OF THE INTERIOR

Bureau of Land Management

[CA–350–1220–AA]

Emergency Closure Order

AGENCY: Bureau of Land Management, Interior.

ACTION: Emergency closure of trails, Fort Sage Off Highway Vehicles Area.

SUMMARY: Notice is hereby given that effective immediately, certain roads and trails in the Fort Sage Off Highway Vehicle Area are closed to all vehicle use. The affected routes are (1) A 4WD vehicle trail located in Sections 1 and 2, T. 25 N., R. 17 E., M.D.M, traversing easterly-westerly; (2) a 4WD vehicle trail located in Sections 2 and 11, T. 25 N., R. 17 E., M.D.M, traversing easterly-westerly; (3) a motorcycle trail located in Sections 2 and 11, T. 25 N., R. 17 E., and Section 34, T. 26 N., R. 17 E., M.D.M, traversing northerly-southerly; (4) All vehicle trails in Sections 7, 18, 19, and 30 T. 25 N., R. 18 E., M.D.M except the road to Willow Springs. The authorized officer reserves the right to allow administrative access when it is determined to be in the interest of the government (i.e. emergency-search and rescue, fire suppression).

SUPPLEMENTARY INFORMATION: The purpose of this closure is to allow for recovery of lands burned by wildfire in August, 2001. Vehicular use of the area has the potential for causing adverse impacts to soil, vegetation, wildlife, wildlife habitat, scenic, and recreation resources until stabilization of the area has occurred. The closure will remain in effect until vegetation recovery is sufficient to delimit the trails and routes and adjacent soil, vegetation, wildlife, wildlife habitat, scenic, and recreation resources are not at risk of adverse impact from trail use of motorized vehicles. The authority for this closure is 43 CFR 834.12.

FOR MORE INFORMATION CONTACT: James Sippel, Outdoor Recreation Planner, BLM Eagle Lake Field Office (530) 257–0456.

Linda D. Hansen,

Field Manager.

[FR Doc. 01–31753 Filed 12–26–01; 8:45 am]

BILLING CODE 4310–40–M

DEPARTMENT OF THE INTERIOR

Bureau of Land Management

[ES–020–02–1610–DU]

Correction to Notice of Availability and Protest Period of the Proposed Planning Analysis for Arkansas and Louisiana

AGENCY: Bureau of Land Management, Department of the Interior.

ACTION: Correction to notice of availability and protest period.

SUMMARY: The Bureau of Land Management (BLM) published a notice in the **Federal Register** on November 30, 2001, regarding the availability of the Proposed Planning Analysis and Environmental Assessment (PA/EA) for public domain lands in Arkansas and Louisiana. The notice contains information that is incorrect. The PA/EA became available and the 30-day protest period began on December 14, 2001.

FOR FURTHER INFORMATION CONTACT: Judy Pace, Bureau of Land Management, 411 Briarwood Drive, Suite 404, Jackson, MS 39206; telephone (601) 977–5403.

Correction: In the **Federal Register** of November 30, 2001 (Volume 66, Number 231), in DOCID: fd30no01–11 on page 59811, under the **DATES** caption, change the protest ending date to January 13, 2002.

Dated: December 5, 2001.

Bruce Dawson,

Field Manager.

[FR Doc. 01–31747 Filed 12–26–01; 8:45 am]

BILLING CODE 4310–GJ–P

DEPARTMENT OF THE INTERIOR

Bureau of Land Management

[OR–120–5101 ER–H019, 2–0044]

Notice of Availability for the Draft Environmental Impact Statement

AGENCY: Bureau of Land Management (BLM), Interior.

ACTION: Notice of Availability for the Draft Environmental Impact Statement (EIS) on a proposed natural gas pipeline right-of-way.

SUMMARY: Pursuant to section 102(2)(C) of the National Environmental Policy Act of 1969, the Bureau of Land Management (BLM), Coos Bay District, directed the preparation of a Draft EIS by Biological Information Specialists, Inc., a third party contractor on the impacts of a proposed natural gas pipeline from near Roseburg in Douglas County, Oregon, to Coos Bay in Coos County, Oregon. BLM received a right-of-way application under Section 501 of the Federal Land Policy and Management Act of October 21, 1976, (43 U.S.C. 1737) on May 17, 2000. The proposed pipeline will cross approximately 60 miles of public and private lands in Coos and Douglas Counties, Oregon. This notice initiates the public review process on the draft EIS. The public is invited to review and comment on the range and adequacy of the draft alternatives and associated environmental effects.

DATES: The comment period will end 60 days after publication of the Environmental Protection Agency's Notice of Availability of this draft environmental impact statement in the **Federal Register**. Comments on the draft EIS should be received on or before the end of the comment period at the address listed below.

Public Participation: Public meetings will be held during the comment period. To ensure local community participation and input, public meetings will be held in Coos Bay, Oregon and at other locations if requested. Early participation by all those interested is

encouraged. At least 15 days public notice will be given for activities where the public is invited to attend. All individuals, organizations, agencies, and Tribes with a known interest in this planning effort have been sent a copy of the document for review. Written comments will be accepted at the address shown below. For comments to be most helpful, they should relate to specific concerns or conflicts that are within the legal responsibilities of the BLM. Specific dates and locations of meetings and comment deadlines will be announced through the local news media, newsletters, and the BLM web site (www.or.blm.gov/coosbay) and the Coos County web site (coosproj@att.net).

ADDRESSES: Written comments should be sent to Bob Gunther, Project Coordinator, Coos Bay District, BLM, 1300 Airport Lane, North Bend, OR 97459. Documents pertinent to this proposal may be examined at the Coos Bay District Office in North Bend, Oregon and local libraries. Comments, including names and street addresses of respondents, will be available for public review at the Coos Bay District Office during regular business hours 7:45 a.m. to 4:30 p.m., Monday through Friday, except holidays, and may be published as part of the Final EIS. Individual respondents may request confidentiality. If you wish to withhold your name or street address from public review or from disclosure under the Freedom of Information Act, you must state this prominently at the beginning of your written comment. Such requests will be honored to the extent allowed by law. All submissions from organizations and businesses, and from individuals identifying themselves as representatives or officials of organizations or businesses, will be available for public inspection in their entirety.

FOR FURTHER INFORMATION CONTACT: Bob Gunther, Project Coordinator, at address above or telephone (541-751–4295), fax: 541–751–4303, or e-mail comments to the attention of *Bob Gunther@or.blm.gov*. For Technical Information contained in the EIS contact Brian Cox, Senior Biologist, Biological Information Specialists, Inc., P.O. Box 27, Camas Valley, Oregon 97416, Telephone: (541) 445–2008.

SUPPLEMENTARY INFORMATION: The Coos County Board of Commissioners has applied for a right-of-way proposing to contract construction of a 12-inch natural gas transmission pipeline to be buried within the existing rights-of-ways of the Pacific Corp. (PP&L) and Bonneville Power Administration (BPA) electric transmission lines, and within the existing roadbed of the Coos Bay Wagon Road. The total length of the pipeline is approximately 60 miles, with approximately 3.0 miles located on lands administered by the BLM. The proposed pipeline would connect to the Williams Gas Pipeline at a meter facility southwest of Roseburg, in or near Section 33 Township 27 South, Range 6 West in Douglas County and would terminate at Ocean Boulevard in the city of Coos Bay (Section 27 Township 25 South, Range 13 West).

The natural gas transmission pipeline will deliver gas to distribution facilities built by Northwest Natural Gas in the Coos Bay and North Bend communities. Smaller 6-inch or 4-inch laterals will be built off the mainline to serve the cities of Coquille, Myrtle Point, and perhaps Bandon at a later date. The location of the laterals has not been finalized, but is anticipated to follow the location of existing power line, State highway, or railroad rights-of-way. Locations of the distribution lines within the city limits are not known at this time, but are anticipated to be located within existing road rights-of-way.

The proposed pipeline will fall under the jurisdiction of US Department of Transportation (DOT), as a gas transmission pipeline. It will be built and operated to all current specifications in 49 CFR Part 192 (Natural Gas Pipelines) and other relevant sections. The Oregon Public Utility Commission will administer DOT Pipeline Safety regulations for this pipeline.

The proposed pipeline will be designed with the appropriate design safety factors. The mainline is proposed as a welded steel pipeline with a Maximum Allowable Operating Pressure (MAOP) of 1,000 pounds per square inch (psi). The finished pipeline will be pressure tested to at least 150 percent of MAOP, to detect leakage or failure.

All construction is done during daylight hours. Mainline construction will take about 6 months. Applicant plans to construct in the relatively dry summer months of April through October.

Pipeline construction will require a working space up to 60 feet wide. DOT requires a minimum of 30 inches of cover in normal soils, 18 inches in consolidated rock, 36 inches under roads. The pipe will be installed to a target depth of 48 inches to top of pipe. Some grading will be required to install the pipe, but shall be substantially restored to original grade before revegetation. All earth disturbance operations shall be subject to an erosion control plan to comply with US Environmental Protection Agency (EPA) guidelines.

In sections along electrical transmission lines, the contractor shall be required to have and follow a plan to continuously ground the pipe, to protect workers from shock from induced currents.

Coos County plans to contract pipeline operations with an experienced pipeline operator. The County and its operator are required under DOT to formulate and use an Operations and Maintenance Plan specifically for this pipeline. The Operations and Maintenance Plan includes an Emergency Plan for specific procedures and notifications in case of an emergency.

Coos County plans to provide cathodic protection against corrosion, as required by DOT. Magnesium anodes will be placed at regular intervals along the pipeline, to sacrificially corrode and protect the coated steel pipe. This method normally mitigates most induced alternating current (AC). In sections near electrical transmission lines, supplemental anodes and other measures will be taken as necessary to minimize induced AC on the pipeline.

Long-term pipeline operation will require 40 feet of space to be kept clear of larger brush and trees. Access roads to the BPA corridor will be restored as needed for pipeline construction and access for Operations and Maintenance.

After the initial pipeline construction period, there is no need to ever excavate any particular segment of pipe. Annual maintenance consists of checking depth of pipe in roadways, repairing any soil erosion, controlling brush, replacing line markers, painting and operating block valves, conducting leak surveys, and checking the effectiveness of the corrosion control system.

The BLM considered issues and concerns identified during the scoping process in the preparation of the draft EIS. The issues identified include: socioeconomics impacts associated with the proposed project; soil erosion; water quality; fish, and wildlife; potential impacts to traditional Native American uses of the area, archaeological sites. Those individuals, organizations, and agencies with a known interest in the proposal will be sent a copy of the draft EIS. Persons wishing to be added to the mailing list for the EIS may do so by contacting the Coos Co. Pipeline Project Office, 1309 W. Central Blvd., Coquille, OR 97423. A final environmental impact

statement is expected to be available for public review in early 2002.

Richard Conrad,

Acting District Manager.

[FR Doc. 01–31770 Filed 12–26–01; 8:45 am]

BILLING CODE 4310–33–P

DEPARTMENT OF THE INTERIOR

Bureau of Land Management

[CA–650–1430–01; CACA–40856]

Notice of Availability

AGENCY: Bureau of Land Management, Interior.

ACTION: Notice of availability for an Environmental Assessment (EA) and Finding of No Significant Impact (FONSI) considering a Recreational and Public Purposes Act (R&PP) lease for a horse ranch near Trona, California.

SUMMARY: An EA and FONSI are available for public review for a proposed horse ranch R&PP lease near the community of Trona, California. Pursuant to section 102(2)(c) of the National Environmental Policy Act of 1969 (NEPA), the Bureau of Land Management (BLM) has prepared an EA analyzing impacts of a proposed horse ranch in San Bernardino County, CA. The ranch is proposed to be located on public land, managed by the Bureau of Land Management, Ridgecrest Field Office. Based on the environmental analysis, BLM has made a Finding of No Significant Impact (FONSI). The EA and FONSI are available for public review and comment for 30 days from publication of this notice. A copy of the document can be obtained from the BLM office at 300 S. Richmond Rd, Ridgecrest, CA 93555 or by contacting Peter G. Graves at (760) 384–5429. After consideration of all the public comments, the BLM Field Manager (Authorized Officer) will render a decision selecting the alternative that best meets BLM's Multiple-Use mission.

ADDRESS: Comments should be addressed to Hector A. Villalobos, Field Manager, BLM Ridgecrest Field Office, 300 S. Richmond Rd., Ridgecrest, CA 93555. Individual respondents may request confidentiality. If you wish to withhold your name or street address from public review or from disclosure under the Freedom of Information Act, you must state this prominently at the beginning of your written comment. Such requests will be honored to the extent allowed by law. All submissions from organizations and businesses, and from individuals identifying themselves as representatives or officials of organizations or businesses, will be available for public inspection in their entirety.

FOR FURTHER INFORMATION CONTACT: Peter Graves, Resource Management Specialist, Ridgecrest Field Office, BLM, 300 South Richmond Road, Ridgecrest, CA 93555, (760) 384–5429.

SUPPLEMENTARY INFORMATION: On June 29, 1999, Rocking ''R'' Ranch submitted a Recreation and Public Purpose Lease application to the Bureau of Land Management (BLM), Ridgecrest Field Office, in order to construct, develop, operate and maintain a horse ranch on public land near the community of Trona, California. The proposed horse ranch would shelter abused and abandoned horses.

Dated: December 7, 2001.

Linn Gum,

Acting Field Manager.

[FR Doc. 01–31763 Filed 12–26–01; 8:45 am]

BILLING CODE 4310–40–P

DEPARTMENT OF THE INTERIOR

Bureau of Land Management

[ES–020–1310–E1]

Notice of Intent To Prepare Planning Analysis/Environmental Assessments

AGENCY: Bureau of Land Management (BLM), Interior.

ACTION: Notice of Intent to Prepare a Planning Analysis/Environmental Assessment.

SUMMARY: The Jackson Field Offices, Eastern States will prepare a Planning Analysis/Environmental Assessment (PA/EA), in cooperation with the U.S. Army Corps of Engineers to consider leasing Federal mineral estate for oil and gas exploration and development. The lands, managed by the U.S. Army Corps of Engineers, are located in the Blue Mountain Lake Project Area in Logan and Yell Counties, Arkansas. This notice is issued pursuant to Title 40 *Code of Federal Regulations* (CFR) 1501.7 and Title 43 CFR 1610.2(c). The planning effort will follow the procedures set forth in Title 43 CFR part 1600. The public is invited to participate in this planning process, beginning with the identification of planning issues and criteria.

DATES: Comments relating to the identification of planning issues and criteria will be accepted for thirty days from the date of this publication. Individual respondents may request confidentiality. If you wish to withhold your name or street address from public review or from disclosure under the Freedom of Information Act, you must state this prominently at the beginning of your written comment. Such requests will be honored to the extent allowed by law. All submissions from organizations and businesses, and from individuals identifying themselves as representatives or officials of organizations or businesses, will be available for public inspection in their entirety.

ADDRESSES: Send comments to: Bureau of Land Management, Jackson Field Office; 411 Briarwood Drive, Suite 404; Jackson, MS 39206.

FOR FURTHER INFORMATION CONTACT: Clay Moore, Lead for PA/EA Jackson Field Office, (601–977–5400).

SUPPLEMENTARY INFORMATION: The BLM has responsibility to consider nominations to lease Federal mineral estate oil and gas exploration and development. An interdisciplinary team will be used in the preparation of the PA/EA. Preliminary issues, subject to change as a result of public input, are (1) potential impacts of oil and gas exploration and development on the surface resources and uses by the Corps of Engineers and (2) consideration of restriction on lease rights to protect surface resources and uses by the Corps of Engineers. The lands are located in the below listed townships/sections in Logan and Yell Counties, Arkansas. Total acreage being addressed is approximately 17,000 acres.

T5N, R25W, 5th Meridian
Sections 2, 7–11, 15–20
T5N, R26W, 5th Meridian
Sections 1–19, 24, 27, 28 330
T5N, R27W, 5th Meridian
Sections 1–4, 9–19, 24–26
T5N, R26W, 5th Meridian
Sections 29, 31, 32
T6 N, R.27W, 5th Meridian

Sections 25, 34–36

Due to the limited scope of this PA/EA process, public meetings are not scheduled.

Sid Vogelpohl,

Acting Field Manager, Jackson Field Office.

[FR Doc. 01–31749 Filed 12–26–01; 8:45 am]

BILLING CODE 4310–GJ–M

DEPARTMENT OF THE INTERIOR

Bureau of Land Management

[ES–020–02–1310–EI]

Notice of Intent To Prepare Planning Analyses/Environmental Assessments

AGENCY: Bureau of Land Management (BLM), Interior.

ACTION: Notice of intent to prepare a Planning Analysis/Environmental Assessment.

SUMMARY: The Jackson Field Office, Eastern States will prepare a Planning Analysis/Environmental Assessment (PA/EA), in cooperation with the U.S. Army Corps of Engineers, to consider leasing Federal mineral estate for oil and gas exploration and development. The lands, managed by the U.S. Army Corps of Engineers, are located in the Carr Creek Project Area in Knott County, Kentucky. This notice is issued pursuant to Title 40 *Code of Federal Regulations* (CFR) 1501.7 and Title 43 CFR 1610.2(c). The planning effort will follow the procedures set forth in Title 43 CFR part 1600. The public is invited to participate in this planning process, beginning with the identification of planning issues and criteria.

DATES: Comments relating to the identification of planning issues and criteria will be accepted for thirty days from the date of this publication. Individual respondents may request confidentiality. If you wish to withhold your name or street address from public review or from disclosure under the Freedom of Information Act, you must state this prominently at the beginning of your written comment. Such requests will be honored to the extent allowed by law. All submissions from organizations and businesses, and from individuals identifying themselves as representatives or officials of organizations or businesses, will be available for public inspection in their entirety.

ADDRESSES: Send comments to: Bureau of Land Management, Jackson Field Office; 411 Briarwood Drive, Suite 404; Jackson, MS 39206.

FOR FURTHER INFORMATION CONTACT: Clay Moore, Lead for PA/EA, Jackson Field Office, (601–977–5400).

SUPPLEMENTARY INFORMATION: The BLM has responsibility to consider nominations to lease Federal mineral estate for oil and gas exploration and development. An interdisciplinary team will be used in the preparation of the PA/EA. Preliminary issues, subject to change as a result of public input, are (1) Potential impacts of oil and gas exploration and development on the surface resources and uses by the Corps of Engineers and (2) consideration of restrictions on lease rights to protect surface resources and uses by the Corps of Engineers. The Carr Creek Project Area is composed of lands acquired in many separate tracts totaling 3,914.64 acres. The Project Area is in Knott County; approximately 20 miles east of Hazard, Kentucky.

Due to the limited scope of this PA/EA process, public meetings are not scheduled.

Bruce E. Dawson,

Field Manager, Jackson Field Office.

[FR Doc. 01–31748 Filed 12–26–01; 8:45 am]

BILLING CODE 4310–GJ–P

DEPARTMENT OF THE INTERIOR

Bureau of Land Management

[UT–030–1020–00]

Notice of Intent To Amend Plans; Corrections

AGENCY: Bureau of Land Management, Interior.

ACTION: Corrections to Notice of intent to Prepare Plan Amendments

SUMMARY: The Bureau of Land Management (BLM), Grand Staircase-Escalante National Monument (GSENM) published in the November 30, 2001 issue of the **Federal Register** (FR) a Notice of Intent to Amend the GSENM Management Plan, the Paria Management Framework Plan, and the Escalante Management Framework Plan. As published, the notice contained the following errors: (1) The notice was incorrect and unclear about which plans are associated with the Willow Gulch and Clark Bench grazing allotments; and (2) The notice inadvertently omitted the inclusion of the Willow Gulch grazing allotment in planning criteria number 1.

FOR FURTHER INFORMATION, CONTACT: Monument Manager, Grand Staircase-Escalante National Monument, 190 E Center, Kanab, Utah 84741 (Phone: 435–644–4300).

SUPPLEMENTARY INFORMATION: Correction 1: In the **Federal Register** issue of November 30, 2001 (Volume 66, Number 231), FR Doc. 01–29729, on Page 59812, in the second column, under the ''Summary'' caption, correct the first sentence to read:

Summary: Pursuant to the Bureau of Land Management (BLM) Planning Regulations (43 CFR 1600) this notice advises the public that the BLM, Grand Staircase-Escalante National Monument (GSENM) is considering amendments to the following plans:

(1) The Grand Staircase-Escalante National Monument (GSENM) Management Plan, and the Paria Management Framework Plan regarding the Clark Bench Allotment; and

(2) The Grand Staircase-Escalante National Monument (GSENM) Management Plan and the Escalante Management Framework Plan regarding the Willow Gulch Allotment.

Correction 2: In the **Federal Register** issue of November 30, 2001 (Volume 66, Number 231), FR Doc. 01–29729, on Page 59812, the third column, under the ''Supplementary Information'' caption, correct the second paragraph, Item 1 to read:

1. These plan amendments/EAs are initiated in response to the voluntary relinquishment of the sole grazing preference/permit for the Clark Bench grazing allotment and a portion of the grazing preference/permit for the Willow Gulch grazing allotment. These plan amendments will be addressed through two separate EAs. The analyses and decisions will apply only to these allotments.

Dated: December 12, 2001.

Sherry Barnett,

Deputy Assistant Director.

[FR Doc. 01–31764 Filed 12–26–01; 8:45 am]

BILLING CODE 4310–$$–P

DEPARTMENT OF THE INTERIOR

Bureau of Land Management

[NMNM 106570]

Intent To Prepare an Environmental Impact Statement (EIS) for a Proposed Pipeline Right-of-Way Across Federal Land in Lea, Eddy, Chaves, Lincoln, Guadalupe, Torrance, Sandoval, McKinley and San Juan Counties, NM; Ector and Winkler Counties, TX

AGENCY: Bureau of Land Management, New Mexico.

ACTION: Notice of Intent to Prepare an Environmental Impact Statement (EIS) and conduct EIS scoping meetings for the conversion of an existing pipeline and construction of new pipeline and above ground structures for the transportation of refined petroleum products from Odessa, Texas to Bloomfield, New Mexico.

SUMMARY: Equilon Pipeline Company, LLC, proposes a pipeline about 500 miles in length, from Odessa, Texas to Bloomfield, New Mexico, carrying refined petroleum products (gasoline, diesel, aviation fuel). Approximately 400 miles of the 500-mile system uses an existing pipeline formerly used to move crude oil from the Four Corners area to West Texas. Approximately 100 miles of new pipeline will be constructed in two segments; one linking Odessa, Texas to the existing pipeline at Jal, New Mexico, and the other connecting the north end of the existing pipeline near Bisti to

Bloomfield, New Mexico. The existing pipeline will be reconditioned.

Pursuant to Section 102(2)(C) of the National Environmental Policy Act (NEPA) of 1969, the Bureau of Land Management, New Mexico State Office, will be the lead agency directing the preparation of an EIS on the impacts of proposed transportation of refined petroleum products through pipelines located on public lands in New Mexico and Texas, including BLM, National Forest System and State as well as private lands.

Preliminary Issues

Potential issues identified at this time include: biological and visual resources; soils, water, safety, social and economic concerns in association with refined petroleum products pipeline construction and operation. Other issues and concerns may be identified through scoping and the public participation development of this public notification process.

Responsible Official

The responsible official is Michelle Chavez, the BLM New Mexico State Director, 1474 Rodeo Road, Santa Fe, New Mexico, 87505.

Decisions To Be Made

The purpose of the EIS is to disclose to the public and permitting agencies the environmental impacts of constructing and operating the proposed pipeline. If approved, the BLM, as lead agency, would sign the necessary Record of Decision (ROD) for the issuance of right-of-way grants under the Mineral Leasing Act for the pipeline proposal.

Tentative Project Schedule

The tentative project schedule is as follows:

Begin Public Comment Period
January 2002
Scoping Meetings
January 2002
Scoping Comment Period Ends
February 2002
Publish Draft EIS
June 2002
Draft EIS Public Meetings
July 2002
Publish Final EIS
October 2002
Record of Decision
November 2002

Public Scoping Meetings

Public Scoping meetings are tentatively scheduled for the week of January 14, 2002 in Moriarty, Jal and Placitas, New Mexico. Open houses will also be held in Odessa, Texas and Bloomfield, NM.

Public Input Requested

Comments concerning the Proposed Action and EIS should address environmental issues to be considered, feasible alternatives to examine, possible mitigation and information relevant to or bearing on the Proposed Action.

Comments, including names and street addresses of respondents, will be available for public review at the BLM Albuquerque Field Office and will be subject to disclosure under the Freedom of Information Act (FOIA). They may be published as part of the EIS and other related documents. Individual respondents may request confidentiality. If you wish to withhold your name or street address from public review and disclosure under the FOIA, you must state this prominently at the beginning of your written comment. Such requests will be honored to the extent allowed by law. All submissions from organizations or businesses will be made available for public inspection in their entirety.

ADDRESSES: Comments should be sent to Joseph Jaramillo, Project Manager, Bureau of Land Management, Albuquerque Field Office, 435 Montano Road, NE, Albuquerque, NM 87107–4935.

Dated: December 6, 2001.

Edwin J. Singleton,

BLM, Albuquerque Field Manager.

[FR Doc. 01–31758 Filed 12–26–01; 8:45 am]

BILLING CODE 4310–AG–P

DEPARTMENT OF THE INTERIOR

Bureau of Land Management

[CA–350–1220–EA]

Temporary Restriction of Use Order

AGENCY: Bureau of Land Management, Interior.

ACTION: Temporary restriction of motor vehicle use, Fort Sage Off Highway Vehicle Area.

SUMMARY: Notice is hereby given that effective 12:00 am April 6 until 6:00 pm April 7, 2002, use of motor vehicles is restricted at the Fort Sage Off Highway Vehicle Area to entrants and officials participating in motorcycle races under permit with the Bureau of Land Management. All roads and trails at the Fort Sage OHV area are closed to all other motor vehicle use on April 6 & 7, 2002, except for County Road 327 (Fort Sage Road), the Fort Sage Trailhead access road, the Widowmaker Trailhead Access road, and the road to the ''Land of David'' site which remain open without restriction.

SUPPLEMENTARY INFORMATION: The purpose of this restriction is to protect persons and their property, by preventing the potential for collision between race participants and casual road and trail riders. The restriction will also prevent adverse impacts to soil, vegetation, wildlife habitat, and recreation resources by preventing the potential for cross country travel by or congregating of spectators adjacent to or between trails. Search and rescue, medical emergency, law enforcement, and other emergency personal are exempted from these restrictions. BLM personnel are exempted from these restrictions for official administrative purposes. Owners of private lands within or adjacent to the Fort Sage OHV Area are exempted for access to owner's private land. Permitted OHV use remains limited to designated roads and trails as established under the existing OHV designation for the area. The authority for this closure is 43 CFR 8364.1

FOR MORE INFORMATION CONTACT: James Sippel, Outdoor Recreation Planner, BLM Eagle Lake Field Office (530) 257–0456.

Linda D. Hansen,

Field Manager.

[FR Doc. 01–31754 Filed 12–26–01; 8:45 am]

BILLING CODE 4310–40–M

DEPARTMENT OF THE INTERIOR

Bureau of Land Management

[NM–930–1430–ET; NMNM 87650]

Public Land Order No. 7506; Revocation of Public Land Order No. 7052; New Mexico

AGENCY: Bureau of Land Management, Interior.

ACTION: Public Land Order.

SUMMARY: This order revokes Public Land Order No. 7052 in its entirety as it affects public land and federally reserved mineral interest withdrawn for protection of the unique geological formations of the Tent Rocks Area of Critical Environmental Concern. The land is withdrawn from mining and all forms of disposition other than exchange by Presidential Proclamation No. 7394 which established the Kasha-Katuwe Tent Rocks National Monument.

EFFECTIVE DATE: December 27, 2001.

FOR FURTHER INFORMATION CONTACT: Jeanette Espinosa, BLM New Mexico

State Office, P.O. Box 27115, Santa Fe, New Mexico 87502, 505–438–7597.

SUPPLEMENTARY INFORMATION: By virtue of the authority vested in the Secretary of the Interior by Section 204 of the Federal Land Policy and Management Act of 1976, 43 U.S.C. 1714 (1994), it is ordered as follows:

1. Public Land Order No. 7052, which withdrew public land and federally reserved mineral interests to protect the unique geological formations of the Tent Rocks Area of Critical Environmental Concern, is hereby revoked in its entirety.

2. The land will be managed in accordance with the laws and regulations pertaining to the Kasha-Katuwe Tent Rocks National Monument.

Dated: December 3, 2001.

J. Steven Griles,

Deputy Secretary.

[FR Doc. 01–31769 Filed 12–26–01; 8:45 am]

BILLING CODE 4310–FB–P

DEPARTMENT OF THE INTERIOR

Bureau of Land Management

[AZ–020–02–1430–ES; AZA–31292]

Notice of Realty Action; Recreation and Public Purposes (R&PP) Act Classification; Arizona

AGENCY: Bureau of Land Management, Interior.

ACTION: Notice.

SUMMARY: The following public lands are located in Maricopa County, Arizona, and found suitable for lease or conveyance under the provisions of the Recreation and Public Purposes Act, as amended (43 U.S.C. 869, *et seq.*). The lands are not needed for federal purposes. Lease or conveyance is consistent with current Bureau of Land Management (BLM) land use planning and would be in the public interest.

The following described lands, located in the City of Phoenix, Maricopa County, and containing approximately 159.32 acres, have been found suitable for lease or conveyance to the City of Phoenix as an addition to the Rio Salado Habitat Restoration Project.

Gila and Salt River Meridian, Arizona

T. 1 N., R. 2 E..
Section 30, Lot 3, N½SE¼, NE¼SW¼.

The lease or conveyance would be subject to the following terms, conditions and reservations:

1. Provisions of the Recreation and Public Purposes Act and all applicable regulations of the Secretary of the Interior.

2. All minerals shall be reserved to the United States, together with the right to prospect for, mine and remove the minerals.

3. A right-of-way for ditches and canals constructed by the authority of the United States.

4. Those rights for a 12-inch water pipeline granted to the City of Phoenix by right-of-way number AZA–28612.

5. Those rights for a 150-foot road easement granted to Maricopa County

Department of Transportation by right-of-way number AZA–17221.

SUPPLEMENTARY INFORMATION: Upon publication of this notice in the **Federal Register**, the lands will be segregated from all other forms of appropriation under the public land laws, including the general mining laws, except for lease or conveyance under the Recreation and Public Purposes Act. For a period of 45 days from the date of publication of this Notice, interested parties may submit comments regarding the proposed lease, conveyance or classification of the lands to the Field Office Manager, Phoenix Field Office, 21605 North 7th Avenue, Phoenix, Arizona 85027.

Classification Comments: Interested parties may submit comments involving the suitability of the land for the proposed Rio Salado Oeste (West) Project for the City of Phoenix. Comments on the classification are restricted to whether the land is physically suited for the proposals, whether the uses will maximize the future use or uses of the land, whether the uses are consistent with local planning and zoning, or if the uses are consistent with state and federal programs.

Application Comments: Interested parties may submit comments regarding the specific uses proposed in the applications and plans of development, whether the BLM followed proper administrative procedures in reaching the decision, or any other factor not directly related to the suitability of the land for proposed uses. Any adverse comments will be reviewed by the State Director. In the absence of any adverse comments, the classification will become effective 60 days from the date of publication in the **Federal Register**.

FOR FURTHER INFORMATION CONTACT: MarLynn Spears at the Phoenix Field Office, 21605 North 7th Avenue, Phoenix, Arizona, 85027, (623) 580–5606.

Dated: December 5, 2001.

Michael A. Taylor,

Field Manager.

[FR Doc. 01–31755 Filed 12–26–01; 8:45 am]

BILLING CODE 4310–32–P

DEPARTMENT OF THE INTERIOR

Bureau of Land Management

[CA–180–1430–EU; CACA–42592]

Notice of Realty Action

AGENCY: Bureau of Land Management, Interior.

ACTION: Notice of Realty Action; Non-competitive sale of public lands, Amador County, California.

SUMMARY: The public lands identified below have been examined and found suitable for disposal pursuant to sections 203 and 209 of the Federal Land Policy and Management Act of October 21, 1976 (90 Stat. 2750–51; 43 U.S.C. 1713, and 90 Stat. 2757–58, 43 U.S.C. 1719), and the Federal Land Transaction Facilitation Act of July 25, 2000 (Pub. L. 106–248), at not less than appraised market value. The potential buyer of the parcel will make application under section 209 of the Federal Land Policy and Management Act of October 21, 1976, to purchase the mineral estate along with the surface.

Mount Diablo Meridian

T. 7 N., R. 13 E.,
Sec. 20, NE¼NE¼SW¼NE¼, E½NW¼NE¼SW¼NE¼; containing 3.75 acres.

The purpose of the proposed sale is to dispose of a parcel of public land that is difficult and uneconomic to manage as part of the public lands of the United States. It is also proposed for sale in order to resolve an inadvertent trespass. The proposed sale is consistent with the Folsom Field Office Sierra Planning Area Management Framework Plan (July 1988), and the public interest will be served by offering the parcel for sale. The parcel will be offered for non-competitive sale to Michael and Kevan Spence, the adjacent landowner.

Pursuant to the Federal Land Transaction Facilitation Act of July 25, 2000 (Pub. L. 106–248), the proceeds from the sale will be deposited into a Federal Land Disposal Account and used to acquire non-federal land within the State of California. The money will be used to purchase lands for the BLM, National Park Service, Forest Service, or Fish and Wildlife Service. Conveyance of the available mineral interests would occur simultaneously with the sale of the land. The mineral interests being

offered for conveyance have no known mineral value. Acceptance of a direct sale offer will constitute an application for conveyance of those mineral interests. The applicant will be required to pay a $50.00 nonreturnable filing fee for conveyance of the available mineral interests.

The patent, when issued, will reserve the following:

A right-of-way thereon for ditches and canals constructed by the authority of the United States, Act of August 30, 1890 (43 U.S.C. 945).

DATES: For a period of 45 days from the date of publication of this notice in the **Federal Register**, interested parties may submit comments pertaining to this action. The lands will not be offered for sale until at least 60 days after the date of publication of this notice in the **Federal Register**.

ADDRESSES: Written comments concerning the proposed sale should be sent to the Bureau of Land Management, Folsom Field Office, 63 Natoma Street, Folsom, California 95630.

FOR FURTHER INFORMATION CONTACT: Additional information concerning the land sale, including relevant planning and environmental documentation, may be obtained from the Folsom Field Office at the above address. Telephone calls may be directed to Karen Montgomery at (916) 985–4474.

SUPPLEMENTARY INFORMATION: Objections to the sale will be reviewed by the State Director, who may sustain, vacate, or modify this realty action. In the absence of any objections, this proposal will become the final determination of the Department of the Interior. Publication of this notice in the **Federal Register** will segregate the public lands from appropriations under the public land laws, including the mining laws, pending disposition of this action, or 270 days from the date of publication of this notice, whichever occurs first. Pursuant to the application to convey the mineral estate, the mineral interests of the United States are segregated by this notice from appropriation under the public land laws, including the mining laws for a period of two years from the date of filing the application.

Dated: November 26, 2001.

James M. Eicher,

Assistant Folsom Field Office Manager.

[FR Doc. 01–31746 Filed 12–26–01; 8:45 am]

BILLING CODE 4310–GJ–P

DEPARTMENT OF THE INTERIOR

Bureau of Land Management

[ID–0778–1430–ES; IDI–32732]

Notice of Realty Action, Recreation and Public Purpose (R&PP) Act Classification, Idaho

AGENCY: Bureau of Land Management.

ACTION: Notice of realty action.

SUMMARY: The following public lands in Cassia County, Idaho have been examined and found suitable for classification for lease to the State of Idaho, Department of Parks and Recreation under the provisions of the Recreation and Public Purpose Act, as amended (43 U.S.C. 869 *et seq.*). The Idaho Department of Parks and Recreation proposes to use the land as a public campground for the City of Rocks National Reserve.

T. 15 S., R. 24 E., Boise Meridian
Section 33: E½SW¼NE¼, SE¼NE¼, NE¼SE¼, E½NW¼SE¼
The area described contains 120 acres, more or less, in Cassia County.

The proposed campground would include 89 camping units with 76 of them having water and electrical hookups for recreational vehicles (RV's), two shower and restroom facilities, septic tanks and associated drain fields, a 100 seat amphitheater, and an access road.

The above described lands are not needed for Federal purposes. The lease of these lands is consistent with the Cassia Resource Management Plan and would be in the public interest.

The lease, when issued, will be subject to the following terms, conditions, and reservations:

1. Provisions of the Recreation and Public Purposes Act and to all applicable regulations of the Secretary of the Interior.
2. Those rights for access road and buried pipeline purposes granted to the Idaho Department of Parks and Recreation by right-of-way IDI–31531.
3. Those rights for road use purposes reserved to the United States by right-of-way reservation IDI–30770.
4. A right-of-way for ditches and canals constructed by the authority of the United States.
5. All minerals shall be reserved to the United States, together with the right to prospect for, mine, and remove the minerals.
6. The lease would be issued subject to the proposed campground conceptual design submitted with the application as well as with its attached Schematic Site Plan. Prior to any construction activity, the detailed construction and design plans will be reviewed and approved by the BLM Authorized Officer.
7. Sixty days prior to an abandonment of the campground, the lessee shall contact the BLM authorized officer to arrange a joint inspection of the lease area. This inspection will be held to agree to an acceptable termination (and rehabilitation) plan. This plan shall include, but is not limited to, removal of facilities, drainage structures, or surface material, recontouring, topsoiling, or seeding. The BLM authorized officer must approve the plan in writing prior to the holder's commencement of any termination activities.

Detailed information concerning this action is available for review at the Burley Field Office of the Bureau of Land Management, 15 East 200 South, Burley, Idaho.

Upon publication of this notice in the **Federal Register**, the lands will be segregated from all other forms or appropriation under the public land laws, including the general mining laws, except for lease under the Recreation and Public Purpose Act and leasing under the mineral leasing laws.

For a period of 45 days from the date of publication of this notice in the **Federal Register**, interested persons may submit comments regarding the proposed classification or lease of the lands to the Field Office Manager, Burley Field Office, 15 East 200 South, Burley, Idaho 83318.

CLASSIFICATION COMMENTS: Interested parties may submit comments involving the suitability of the land for a public campground facility for the City of Rocks National Reserve. Comments on the classification are restricted to whether the land is physically suited for the proposal, whether the use will maximize the future use or uses of the land, whether the use is consistent with local planning and zoning, or if the use is consistent with State and Federal programs.

APPLICATION COMMENTS: Interested parties may submit comments regarding the specific use proposed in the application and plan of development, whether the BLM followed proper administrative procedures in reaching the decision, or any other factor not directly related to the suitability of the land for a public campground facility.

Any adverse comments will be reviewed by the State Director. In the absence of any adverse comments, the classification will become effective 60 days from the date of publication of this notice in the **Federal Register**.

Dated: October 18, 2001.

Theresa Hanley,

Burley Field Office Manager.

[FR Doc. 01–31762 Filed 12–26–01; 8:45 am]

BILLING CODE 4310–GG–P

DEPARTMENT OF THE INTERIOR

Bureau of Land Management

[NV–050–1430–ES; N–74496 and N–74570]

Notice of Realty Action: Segregation Terminated, Leases/Conveyances for Recreation and Public Purposes

AGENCY: Bureau of Land Management, interior.

ACTION: Segregation Terminated, Recreation and Public Purposes Leases/Conveyances.

SUMMARY: The following described public land in Las Vegas, Clark County, Nevada was segregated for exchange purposes on July 23, 1997 under serial numbers N–61855 and N–66364. The exchange segregations on the subject land will be terminated upon publication of this notice in the **Federal Register**. The land has been examined and found suitable for leases/conveyances for recreational or public purposes under the provisions of the Recreation and Public Purposes Act, as amended (43 U.S.C. 869 et seq.). The Clark County School District proposes to use the land for an elementary and a middle school.

Elementary School, N–74496:

Mount Diablo Meridian, Nevada,

T. 20 S., R. 62 E.,
Sec. 14, W½ of lot 5. approximately 21.86 acres

Middle School, N–74570:

Mount Diablo Meridian, Nevada,

T. 20 S., R. 62 E.,
Sec. 14, E½ of lot 5. approximately 21.86 acres

Both schools are located near Carey Avenue and Hollywood Boulevard. The land is not required for any federal purpose. The leases/conveyances are consistent with current Bureau planning for this area and would be in the public interest. The leases/patents, when issued, will be subject to the provisions of the Recreation and Public Purposes Act and applicable regulations of the Secretary of the Interior, and will contain the following reservations to the United States:

1. A right-of-way thereon for ditches or canals constructed by the authority of the United States, Act of August 30, 1890 (43 U.S.C. 945).

2. All minerals shall be reserved to the United States, together with the right to prospect for, mine, and remove such deposits from the same under applicable law and such regulations as the Secretary of the Interior may prescribe and will be subject to:

1. Easements in accordance with the Clark County Transportation Plan.

2. Those rights for water line purposes which have been granted to the Southern Nevada Water Authority by Permit No. N–1521 under the act of December 5, 1924 (43 Stat. 0672).

3. Those rights for gas pipeline purposes which have been granted to Southwest Gas Corporation by Permit No. Nev–061333 under the act of February 25, 1920 (41 Stat. 0437, 30 USC 185 sec. 28).

4. Those rights for telephone line purposes which have been granted to Sprint of Nevada by Permit No. N–75030 under the act of October 21, 1976 (090 Stat. 2776, 43 USC 1761).

Detailed information concerning these actions is available for review at the office of the Bureau of Land Management, Las Vegas Field Office, 4765 Vegas Drive, Las Vegas, Nevada or by calling (702) 647–5088. Upon publication of this notice in the **Federal Register**, the above described land will be segregated from all other forms of appropriation under the public land laws, including the general mining laws, except for lease/conveyance under the Recreation and Public Purposes Act, leasing under the mineral leasing laws, and disposal under the mineral material disposal laws.

For a period of 45 days from the date of publication of this notice in the **Federal Register**, interested parties may submit comments regarding the proposed leases/conveyances for classification of the land to the Las Vegas Field Manager, Las Vegas Field Office, 4765 Vegas Drive, Las Vegas, Nevada 89108.

Classification Comments: Interested parties may submit comments involving the suitability of the land for an elementary and a middle school. Comments on the classification are restricted to whether the land is physically suited for the proposal, whether the use will maximize the future use or uses of the land, whether the use is consistent with local planning and zoning, or if the use is consistent with State and Federal programs.

Application Comments: Interested parties may submit comments regarding the specific use proposed in the applications and plans of development, whether the BLM followed proper administrative procedures in reaching the decision, or any other factor directly related to the suitability of the land for an elementary and a middle school. Any adverse comments will be reviewed by the State Director who may sustain, vacate, or modify this realty action. In the absence of any adverse comments, these realty actions will become the final determination of the Department of the Interior. The classification of the lands described in this Notice will become effective 60 days from the date of publication in the **Federal Register**.

The lands will not be offered for leases/conveyances until after the classification becomes effective.

Dated: November 26, 2001.

Rex Wells,

Assistant Field Manager, Division of Lands, Las Vegas, NV.

[FR Doc. 01–31759 Filed 12–26–01; 8:45 am]

BILLING CODE 4310–HC–P

DEPARTMENT OF THE INTERIOR

Bureau of Land Management

[NV–050–1430–ES; N–36866–C]

Notice of Realty Action: Segregation Terminated, Lease/Conveyance for Recreation or Public Purposes

AGENCY: Bureau of Land Management.

ACTION: Segregation terminated, recreation and public purposes lease/conveyance.

SUMMARY: The following described public land in Logandale, Nevada was segregated for exchange purposes on September 5, 1997 under serial number N–61968. The exchange segregation on the subject land will be terminated upon publication of this notice in the **Federal Register**. The land has been examined and found suitable for lease/conveyance for recreational or public purposes under the provisions of the Recreation and Public Purposes Act, as amended (43 U.S.C. 869 *et seq.*). Clark County proposes an amendment to N–36866–C to add this acreage to the Logandale Park.

T. 15 S., R. 67 E., M.D.M.
Section 26, SW¼SW¼NW¼NW¼, E½SW¼NW¼NW¼.

Containing 7.5 acres, more or less, located at the corner of Lyman and Frehner Roads.

The land is not required for any federal purpose. The lease/conveyance is consistent with current Bureau planning for this area and would be in the public interest. The lease/patent, when issued, will be subject to the provisions of the Recreation and Public Purposes Act and applicable regulations of the Secretary of the Interior, and will contain the following reservations to the United States:

1. A right-of-way thereon for ditches or canals constructed by the authority of the United States, Act of August 30, 1890 (43 U.S.C. 945).

2. All minerals shall be reserved to the United States, together with the right to prospect for, mine, and remove such deposits from the same under applicable law and such regulations as the Secretary of the Interior may prescribe and will be subject to:

1. Easements in accordance with the Clark County Transportation Plan. Detailed information concerning this action is available for review at the office of the Bureau of Land Management, Las Vegas Field Office, 4765 Vegas Drive, Las Vegas, Nevada or by calling (702) 647–5088. Upon publication of this notice in the **Federal Register**, the above described land will be segregated from all other forms of appropriation under the public land laws, including the general mining laws, except for lease/conveyance under the Recreation and Public Purposes Act, leasing under the mineral leasing laws, and disposal under the mineral material disposal laws.

For a period of 45 days from the date of publication of this notice in the **Federal Register**, interested parties may submit comments regarding the proposed lease/conveyance for classification of the land to the Las Vegas Field Manager, Las Vegas Field Office, 4765 Vegas Drive, Las Vegas, Nevada 89108.

Classification Comments: Interested parties may submit comments involving the suitability of the land for a park. Comments on the classification are restricted to whether the land is physically suited for the proposal, whether the use will maximize the future use or uses of the land, whether the use is consistent with local planning and zoning, or if the use is consistent with State and Federal programs.

Application Comments: Interested parties may submit comments regarding the specific use proposed in the application and plan of development, whether the BLM followed proper administrative procedures in reaching the decision, or any other factor directly related to the suitability of the land for a park. Any adverse comments will be reviewed by the State Director who may sustain, vacate, or modify this realty action. In the absence of any adverse comments, these realty actions will become the final determination of the Department of the Interior. The classification of the land described in this Notice will become effective 60 days from the date of publication in the **Federal Register**. The lands will not be offered for lease/conveyance until after the classification becomes effective.

Dated: November 26, 2001.

Rex Wells,

Assistant Field Manager, Division of Lands, Las Vegas, NV.

[FR Doc. 01–31760 Filed 12–26–01; 8:45 am]

BILLING CODE 4310–HC–P

DEPARTMENT OF THE INTERIOR

Bureau of Land Management

[NV–930–4210–05; N–37116]

Notice of Realty Action: Lease/conveyance for Recreation and Public Purposes

AGENCY: Bureau of Land Management.

ACTION: Recreation and public purpose lease/conveyance.

SUMMARY: The following described public land in Las Vegas, Clark County, Nevada has been examined and found suitable for lease/conveyance for recreational or public purposes under the provisions of the Recreation and Public Purposes Act, as amended (43 U.S.C. 869 *et seq.*). The City of Las Vegas proposes to use the land for a public park.

Mount Diablo Meridian, Nevada

T. 20 S., R. 60 E.,
Sec. 8 S½NE¼NW¼NW½,
N½SE¼NW¼NW¼

Containing 10 acres, more or less.

The land is not required for any federal purpose. The lease/conveyance is consistent with current Bureau planning for this area and would be in the public interest. The lease/patent, when issued, will be subject to the provisions of the Recreation and Public Purposes Act and applicable regulations of the Secretary of the Interior, and will contain the following reservations to the United States:

1. A right-of-way thereon for ditches or canals constructed by the authority of the United States, Act of August 30, 1890 (43 U.S.C. 945).

2. All minerals shall be reserved to the United States, together with the right to prospect for, mine and remove such deposits from the same under applicable law and such regulations as the Secretary of the Interior may prescribe.

and will be subject to:

1. An easement 30 feet in width along the East boundary in favor of the City of Las Vegas for road, sewer, public utilities and flood control purposes.

Detailed information concerning this action is available for review at the office of the Bureau of Land Management, Las Vegas Field Office, 4765 W. Vegas Drive, Las Vegas, Nevada.

Upon publication of this notice in the **Federal Register**, the above described land will be segregated from all other forms of appropriation under the public land laws, including the general mining laws, except for lease/conveyance under the Recreation and Public Purposes Act, leasing under the mineral leasing laws and disposals under the mineral material disposal laws. For a period of 45 days from the date of publication of this notice in the **Federal Register**, interested parties may submit comments regarding the proposed lease/conveyance for classification of the lands to the Field Manager, Las Vegas Field Office, Las Vegas, Nevada 89108.

Classification Comments: Interested parties may submit comments involving the suitability of the land for a public park. Comments on the classification are restricted to whether the land is physically suited for the proposal, whether the use will maximize the future use or uses of the land, whether the use is consistent with local planning and zoning, or if the use is consistent with State and Federal programs.

Application Comments: Interested parties may submit comments regarding the specific use proposed in the application and plan of development, whether the BLM followed proper administrative procedures in reaching the decision, or any other factor not directly related to the suitability of the land for a public park.

Any adverse comments will be reviewed by the State Director. In the absence of any adverse comments, the classification of the land described in this Notice will become effective 60 days from the date of publication in the **Federal Register**. The lands will not be offered for lease/conveyance until after the classification becomes effective.

Dated: November 26, 2001.

Rex Wells,

Assistant Field Manager, Division of Lands, Las Vegas, NV.

[FR Doc. 01–31761 Filed 12–26–01; 8:45 am]

BILLING CODE 4510–HC–P

DEPARTMENT OF THE INTERIOR

Bureau of Land Management

[NV–040–1430–EU, N–51513]

Notice of Penalty Action

AGENCY: Bureau of Land Management, Interior.

ACTION: Notice of Realty Action.

SUMMARY: The below listed public land in Lincoln County, Nevada has been determined suitable for disposal. It will be sold under direct sale procedures in accordance with Sections 203 and 209 of the Federal Land Policy and Management Act of 1976 (90 Stat. 2750, 43 U.S.C. 1713, 1719, and 1740) at not less that fair market value (FMV).

DATES: For a period of 45 days from the date of publication of this notice in the **Federal Register**, interested parties may submit comments to the Assistant Field Manager, Nonrenewable Resources, Ely Field Office.

ADDRESSES: Written comments should be addressed to: Bureau of Land Management, Jeffrey A. Weeks, Assistant Field Manager, HC 33 Box 33500, Ely, Nevada 89301–9408.

FOR FURTHER INFORMATION CONTACT: Detailed information concerning the sale, including the reservation, sale procedures and conditions, planning and environmental documents, are available at the Ely Field Office of the Bureau of Land Management, at 702 North Industrial Way, Ely, Nevada 89301, or by calling Kevin Finn at (775) 289–1849.

SUPPLEMENTARY INFORMATION: The following described parcel of land situated in Lincoln County, Nevada is being offered at direct sale to resolve a long standing, inadvertent trespass. Sale price of the 1.25 acres is $5000. The parcel is described below.

Mount Diablo Meridian, Nevada

T. 2 S., 68 E., Sec. 6; E1/2E1/2E1/2E1/4SW1/4SE1/4.
1.25 acres, more or less.

The applicant will be required to pay a $50.00 non-refundable filing fee in conjunction with the final payment for processing of the conveyance of the locatable mineral interests. The terms and conditions applicable to the sale are as follows:

1. All leasable and saleable mineral deposits are reserved on land sold; permittees, licenses, and licensees, and lessees, retain the right to prospect for, mine, and remove the minerals owned by the United States under applicable law and any regulations that the Secretary of the Interior may prescribe, including all necessary access and exit rights.

2. A right-of-way is reserved for ditches and canals constructed by authority of the United States under the Act of August 30, 1890 (43 U.S.C. 945).

3. All land parcels are subject to all valid and existing rights. Encumbrances of record are available for review during business hours, 7:30 to 4:30 p.m., Monday through Friday, at the Bureau of Management, Ely Field Office, 702 North Industrial Way, Ely, Nevada.

4. The purchaser, by accepting a patent, agrees to indemnify, defend, and hold harmless the United States from any costs, damages, claims, causes of action, penalties, fines, liabilities, and judgements of any kind or nature arising from the past, present, and future acts or omissions of the patentee or their employees, agents, contractors, or lessees, or any third party, arising out of, or in connection with, the patentee's use, occupancy, or operations of the patented real property. The indemnification and hold harmless agreement includes, but is not limited to, acts and omissions of the patentee and their employees, agents, contractors, or lessees, or any third party, arising out of or in connection with the use and/or occupancy of the patented real property which has already resulted or does hereafter result in: (1) Violation of federal, state, and local laws and regulations that are now, or may in the future become, applicable to the real property: (2) Judgements, claims or demands of any kind assessed against the United States: (3) Costs, expenses, or damages of any kind incurred by the United States: (4) or threatened releases of solid or hazardous waste(s) and/or hazardous substance(s), as defined by federal or state environmental laws; off, on, into or under land, property and other interests of the United States; (5) Other activities by which solids or hazardous substances or wastes, as defined by federal and state environmental laws are generated, released, stored, used or otherwise disposed of on the patented real property, and any cleanup response, remedial action, or other actions related in any manner to said solid or hazardous substances or wastes; or (6) Natural resources damages as defined by federal and state law. This covenant shall be construed as running with the patented real property and may be enforced by the United States in a court of competent jurisdiction.

For a period of 45 days from the date of publication of this notice in the **Federal Register**, the general public and interested parties may submit comments to the Assistant Field Manager, Nonrenewable Resources, Ely Field Office, 702 North Industrial, Ely, Nevada 89301. Any adverse comments will be reviewed by the Nevada State Director, who may sustain, vacate, or modify this realty action. In the absence of any adverse comments, the realty action will become the final determination of the Department of the Interior. The Bureau of Land Management may accept or reject any or all offers, or withdraw any land or interest in the land from sale, if, in the opinion of the authorized officer, communication of the sale would be fully consistent with FLPMA or other applicable laws or is determined not in the public interest. Any comments received during this process, as well as the commentor's name and address, will be available to the public in the administrative record and/or pursuant to the Freedom of Information Act request. You may indicate for the record that you do not wish your name and/address made available to the public. Any determinations by the Bureau of Land Management to release or withhold the names and/or addresses of those who comment will be made on a case-by-case basis. A commentor's request to have their name and/or address withheld from public release will be honored to the extent permissible by law. The identified parcel will not be offered for sale until at least 60 days after the date of publication of this notice in the **Federal Register**.

Dated: September 21, 2001.

Jeffrey A. Weeks,

Assistant Field Manager, Nonrenewable Resources.

[FR Doc. 01–31771 Filed 12–26–01; 8:45 am]

BILLING CODE 4310–HC–M

DEPARTMENT OF THE INTERIOR

Bureau of Land Management

[(ES–032–1430–BJ) ES–51274, Group 550, Minnesota]

Notice of Filing of Plat of an Island; Minnesota

1. The plat of the survey of an island in Little Kandiyohi Lake, Township 118 North, Range 34 West, Fifth Principal Meridian, Minnesota, accepted on November 29, 2001, will be officially filed in Eastern States, Springfield, Virginia at 7:30 a.m., on February 7, 2002. The tract shown below describes the island omitted from the original survey.

Fifth Principal Meridian, Minnesota,

T. 118 N. R. 34 W.,
Tract No. 37.

2. Tract No. 37 is firm land rising 20 ft. above the ordinary high water mark. The soil has evolved from glacial till parent material and is similar to the soil found on the adjacent uplands. Numerous stones were located along the entire shore line at the ordinary high water mark and at the highest points of the island. Tree species consist of ash, basswood, boxelder, elm, hickory and

oak, ranging in size from 3 to 18 inches in diameter, with a maximum age of 120+ years. The ground cover consists of hazel, willow, cattails and native grasses along the entire shore line.

3. The present water level of the lake compares favorably with that of the lake at the time of the original survey; therefore, the elevation and upland character of the island along with the depth and width of the lake between the adjacent upland and the island are considered evidence that the island did exist in 1858, the year Minnesota was admitted to the Union. The original survey in 1857 did not note the presence of this island.

4. Tract No. 37 is more than 50 percent upland in character within the interpretation of the Swamp and Overflow Act of September 28, 1850 (9 Stat. 519) as extended to the State of Minnesota under the Act of March 12, 1860 (12 Stat. 3).

5. The survey was requested by Bureau of Land Management, Milwaukee Field Office, under the authority of section 211 of FLPMA (43 U.S.C. 1721) and the Minnesota Public Lands Improvement Act of 1990, P.L. 101–442 (104 Stat. 1020).

6. Except for valid existing rights, this island will not be subject to application, petition, location or selection under any public law until February 7, 2002.

7. Interested parties protesting the determination that this island is public land of the United States, must present valid proof showing that the island did not exist at the time of statehood or that it was attached to the mainland at the time of the original survey. Such protests must be submitted in writing to the Chief Cadastral Surveyor, Eastern States, Bureau of Land Management, 7450 Boston Boulevard, Springfield, Virginia 22153, prior to 7:30 a.m., February 7, 2002.

Copies of the plat will be made available upon request and prepayment of the appropriate fee.

Dated: November 29, 2001.

Corwyn J. Rodine,

Chief Cadastral Surveyor.

[FR Doc. 01–31750 Filed 12–26–01; 8:45 am]

BILLING CODE 4310–GJ–P

DEPARTMENT OF THE INTERIOR

Bureau of Land Management

[(ES–032–1430–BJ) ES–51273, Group 549, Minnesota]

Notice of Filing of Plat of an Island; Minnesota

1. The plat of the survey of an island in Little Kandiyohi Lake, Township 119 North, Range 34 West, Fifth Principal Meridian, Minnesota, accepted on November 29, 2001, will be officially filed in Eastern States, Springfield, Virginia at 7:30 a.m., on February 7, 2002. The tract shown below describes the island omitted from the original survey.

Fifth Principal Meridian, Minnesota,

T. 119 N. R. 34 W.,
Tract No. 37.

2. Tract No. 37 is firm land rising 5–8 ft. above the ordinary high water mark. The soil has evolved from glacial till parent material and is similar to the soil found on the adjacent uplands. Numerous stones were located on the highest points of the island. Tree species consist of ash, basswood, boxelder, elm, hickory and oak, ranging in size from 3 to 18 inches in diameter, with a maximum age of 120+ years. The ground cover consists of hazel, willow, cattails and native grasses along the entire shore line.

3. The present water level of the lake compares favorably with that of the lake at the time of the original survey; therefore, the elevation and upland character of the island along with the depth and width of the lake between the adjacent upland and the island are considered evidence that the island did exist in 1858, the year Minnesota was admitted to the Union. The original survey in 1857 did not note the presence of this island.

4. Tract No. 37 is more than 50 percent upland in character within the interpretation of the Swamp and Overflow Act of September 28, 1850 (9 Stat. 519) as extended to the State of Minnesota under the Act of March 12, 1860 (12 Stat. 3).

5. The survey was requested by William T. Burgmeier and the B&P Living Trust, under the authority of section 211 of FLPMA (43 U.S.C. 1721) and the Minnesota Public Lands Improvement Act of 1990, Pub.L. 101–442 (104 Stat. 1020).

6. Except for valid existing rights, this island will not be subject to application, petition, location or selection under any public law until February 7, 2002.

7. Interested parties protesting the determination that this island is public land of the United States, must present valid proof showing that the island did not exist at the time of statehood or that it was attached to the mainland at the time of the original survey. Such protests must be submitted in writing to the Chief Cadastral Surveyor, Eastern States, Bureau of Land Management, 7450 Boston Boulevard, Springfield, Virginia 22153, prior to 7:30 a.m., February 7, 2002.

Copies of the plat will be made available upon request and prepayment of the appropriate fee.

Dated: November 29, 2001.

Corwyn J. Rodine,

Chief Cadastral Surveyor.

[FR Doc. 01–31751 Filed 12–26–01; 8:45 am]

BILLING CODE 4310–GJ–P

DEPARTMENT OF THE INTERIOR

Bureau of Land Management

[(ES–960–1910–BJ–4377) ES–48651, Group 159, Wisconsin]

Notice of Cancellation of Plat of Survey and Filing of Plat of Survey; Wisconsin

The plat accepted March 14, 1997 published in the **Federal Register** on March 24, 1997, has been cancelled effective November 29, 2001.

The plat of the corrective dependent resurvey of a portion of the subdivisional lines, and the subdivision of section 14, Township 40 North, Range 4 East, Fourth Principal Meridian, Wisconsin, will be officially filed in Eastern States, Springfield, Virginia at 7:30 a.m., on February 4, 2002.

The survey was requested by the Bureau of Indian Affairs.

All inquiries or protests concerning the technical aspects of the survey must be sent to the Chief Cadastral Surveyor, Eastern States, Bureau of Land Management, 7450 Boston Boulevard, Springfield, Virginia 22153, prior to 7:30 a.m., February 4, 2002.

Copies of the plat will be made available upon request and prepayment of the appropriate fee.

Dated: November 29, 2001.

Corwyn J. Rodine,

Chief Cadastral Surveyor.

[FR Doc. 01–31752 Filed 12–26–01; 8:45 am]

BILLING CODE 4310–GJ–P

DEPARTMENT OF THE INTERIOR

National Park Service

National Register of Historic Places; Notification of Pending Nominations

Nominations for the following properties being considered for listing in the National Register were received by the National Park Service before December 8, 2001. Pursuant to section 60.13 of 36 CFR part 60 written comments concerning the significance of these properties under the National Register criteria for evaluation may be forwarded by United States Postal Service, to the National Register of

Historic Places, National Park Service, 1849 C St. NW, NC400, Washington, DC 20240; by all other carriers, National Register of Historic Places, National Park Service, 800 N. Capitol St. NW, Suite 400, Washington DC 20002; or by fax, 202–343–1836. Written or faxed comments should be submitted by January 11, 2002.

Carol D. Shull,

Keeper of the National Register Of Historic Places.

California

Los Angeles County

McCarty Memorial Christian Church, 4101 W. Adams Blvd., Los Angeles, 01001456

Orange County

Cogged Stone Site—CA–ORA–83, Address Restricted, Huntington Beach, 01001455

San Diego County

El Cortez Apartment Hotel, 702 Ash St., San Diego, 01001458

Santa Barbara County

Goleta Depot, 300 N. Los Carneros Rd., Goleta, 01001457

Shasta County

Cascade Theatre, 1731 Market St., Redding, 01001459

Illinois

Piatt County

South Charter Street Historic District, Roughly bounded by Marion and South Market St.s, Sage Dr., and South State St., Monticello, 01001464

St. Clair County

Spivey Building, 417 Missouri Ave., East St. Louis, 01001462

Iowa

Jones County

St. Luke's Methodist Church, 211 N. Sycamore, Monticello, 01001461

Marshall County

Marshalltown Downtown Historic District, Roughly bounded by 2nd St., State St., 3rd. Ave., and E. Church St., Marshalltown, 01001463

Polk County

Seth Richards Commercial Block, 300–310 Court Ave., Des Moines, 01001460

Louisiana

Caddo Parish Star Cemetery, off 2100 blk of Texas Ave., Shreveport, 01001478

Massachusetts

Berkshire County

Main Street Historic District, 1–57 Main St., 1–2 Pine St., 2 Sergeant St., Stockbridge, 01001466

Middlesex County

Graniteville Historic District, Broadway, Church, Cross, First, Fourth, N. Main, River School, Second, and Third Sts., Westford, 01001467

Norfolk County

Dwight—Derby House, 7 Frairy St., Medfield, 01001465

Mississippi

Yazoo County

Bull Homestead, 13836 MS 16 E, Benton, 01001479

New Mexico

Chaves County

Downtown Roswell Historic District (Boundary Increase), (Roswell New Mexico MRA) Roughly bounded by 8th and 10th Sts., Richardson and Kentucky Aves., Roswell, 01001469

Santa Fe County

New Mexico Supreme Court Building, (New Deal in New Mexico MPS) 237 Don Gaspar Ave., Santa Fe, 01001468

Union County

Eklund Hotel, 15 Main St., Clayton, 01001470

Texas

Galveston County

Denver Court Historic District, Roughly bounded by Aves. S1/2 and U1/2, 43rd and 52nd Sts., Galveston, 01001471

Tarrant County

Central Handley Historic District, Roughly bounded by E. Lancaster Ave., Forest Ave., Kerr St., and Handley Dr., Fort Worth, 01001472

Vermont

Caledonia County

New Discovery State Park, (Religious Buildings, Sites and Structures in Vermont MPS) 4239 VT 232, Peacham, 01001475

Windham County

Bellows Galls Neighborhood Historic District, Atkinson, Westminster, School, Hapgood Sts, Hapgood Pl., Burt St., Henry St., South St., Hadley St., Temple Pl., Rockingham, 01001477

Washington

San Juan County

Tharald Homestead, Hoffman Cove Rd., Shaw Island, 01001473

Wisconsin

Dane County

Stoughton High School, 211 N. Forrest St., Stoughton, 01001476

Trempealeau County

Independence City Hall, 23688 Adams St., Independence, 01001474

A Request for REMOVAL has been made for the following resources:

Iowa

Buchanan County

Otterville Bridge (Highway Bridges of Iowa MPS) Bordner Dam Rd., over Wapisipinicon R. Independence vicinity 9800759

Pennsylvania

Bedford County

Grand View Point Hotel (Lincoln Highway Heritage Corridor Historic Resources MPS) US 30, 17 mi. W of Bedford, Juniata Twnshp Bedford vicinity, 97000219

[FR Doc. 01–31768 Filed 12–26–01; 8:45 am]

BILLING CODE 4310–70–P

DEPARTMENT OF THE INTERIOR

National Park Service

National Register of Historic Places; Notification of Pending Nominations

Nominations for the following properties being considered for listing in the National Register were received by the National Park Service before December 1, 2001. Pursuant to section 60.13 of 36 CFR part 60 written comments concerning the significance of these properties under the National Register criteria for evaluation may be forwarded by United States Postal Service, to the National Register of Historic Places, National Park Service, 1849 C St. NW, NC400, Washington, DC 20240; by all other carriers, National Register of Historic Places, National Park Service, 800 N. Capitol St. NW, Suite 400, Washington DC 20002; or by fax, 202–343–1836. Written or faxed

comments should be submitted by January 11, 2002.

Carol D. Shull,

Keeper of the National Register of Historic Places.

GEORGIA

Early County

Butler, James And Clara, House, 418 College St., Blakely, 01001430

Meriwether County

Bulloch Family House, Spring St., Warm Springs, 01001429

Schley County

Woodall—Patton House and Post Office, GA 240, 3 mi. W of US19, Ellaville, 01001432

Whitfield County

Western and Atlantic Railroad Tunnel at Tunnel Hill, Western and Atlantic Railroad, Tunnel Hill, 01001431

MAINE

Waldo County

Knowlton, Ebenezer, House, Choate Rd., Montville, 01001433

NEW YORK

Albany County

Bethlehem Grange No. 137, 24 Bridge St., Selkirk, 01001443

Van Der Zee, C., House, NY 143 at Blossom Hill Rd., Coeymans Hollow, 01001434

Bronx County

Lisanti Chapel, 740 E. 215th St., Bronx, 01001447

Cattaraugus County

Pfeiffer—Wheeler American Chestnut Cabin, Lillibridge Rd., Portville, 01001436

Wheeler, William E., House, 29 Maple Ave., Portville, 01001435

Columbia County

St. John's Evangelical Lutheran Church, 923 NY 19, Livingston, 01001437

Kings County

Brooklyn Public Library—Central Building, Grand Army Plaza, Brooklyn, 01001446

Congregation Tifereth Israel, 1320 Eight Ave., Brooklyn, 01001442

New York County

Broadway Synagogue, Old, 15 Old Broadway, New York, 01001440

Queens County

Prospect Cemetery, 159th St. and Beaver Rd., Jamaica, 01001438

Trinity Chapel, 1874 Mott Ave., Far Rockaway, 01001445

Schoharie County

Lasell Hall, 350 Main St., Schoharie, 01001444

Ulster County

Coykendall Lodge, Off Alder Lake Rd., Hardenbergh, 01001441

O & W Railroad Station at Port Ben, Tow Path Rd., Wawarsing, 01001448

Westchester County

Church of St. Joseph of Arimathea, 2172 Saw Mill River Rd., Greenburgh, 01001439

TENNESSEE

Greene County

Earnest Farms Historic District, (Transformation of the Nolichucky Valley MPS) S of Nolichucky R., bounded by Crum Farm and Jim Earnest Farmstead, Chuckey, 01001449

UTAH

Kane County

Dixon, Maynard, and Edith Hamlin House and Studio, UT 89, Mt. Carmel, 01001450

Salt Lake County

Capitol Hill Historic District (Boundary Increase), Roughly bounded by 300 North, 400 West, 800 North, Wall St., and 200 West, Salt Lake City, 01001451

Clark, Isaac C. and Dorothy S., House, 1430 E. Federal Way, Salt Lake City, 01001452

WISCONSIN

Walworth County

Main Street Historic District, Roughly Main St., from Broad St. to Center St., Lake Geneva, 01001453

WYOMING

Teton County

Miller, Grace and Robert, Ranch (Boundary Increase), 1 mi. NE of Jackson, Jackson, 01001454

A Request for REMOVAL has been made for the following resources:

ARKANSAS

Chicot County

Liberto, P. and J.–Rosa Portera Building (Ethnic and Racial Minority Settlement of the Arkansas Delta MPS) Main St., Eudora, 92001348

Clark County

Benjamin Mercantile Building, 410 Main St., Arkadelphia, 90001378

Dallas County

Brewster House (Dallas County MRA), US 79 Fordyce, 83003464

Koonce Building (Dallas County MRA), 3rd St. Fordyce, 83003525

Old Fordyce Post Office (Dallas County, MRA), E. 2nd St., Fordyce, 83003530

Princeton Methodist Church (Dallas County, MRA), AR 9, Princeton, 83003533

Faulkner County

First Baptist Church (Thompson, Charles L., Design Collection TR), Davis and Robinson Sts., Conway, 82000813

Miller County

First Methodist Church (Thompson, Charles L., Design Collection TR), 100 E. 6th, Tearkana, 82000863

Lightfoot, Dr. J.A., House 422 Pecan St., Texarkana, 95000792

Perry County

Cypress Creek Bridge (Historic Bridges of Arkansas MPS), Co. Rd. 64, over Cypress Creek, Perry vicinity, 90000537

Polk County

Scoggin House, 1215 Port Arthur Ave., Mena, 78000616

Pulaski County

Forrey-Smith Apartments (Thompson, Charles L., Design Collection TR), 1019 W. 4th St., Little Rock, 82000893

Forrey-Smith Apartments (Thompson, Charles L., Design Collection TR), 409 Ringo St., Little Rock, 82000892

Pulaski County Rd., 71D Bridge (Historic Bridges of Arkansas MPS), Co. Rd. 71D over Bayou Meto, Jacksonville, 95000652

Saline River Bridge (Historic Bridges of Arkansas MPS), Co. Hwy. 365, over the Saline River, Benton, 90000529

Sebastian County

Vache Grasse Creek Bridge (Historic Bridges of Arkansas MPS), Co. Rd. 77A over Vache Grasse Cr., Milltown vicinity, 95000563

Sharp County

Metcalfe House (Evening Shade MRA), Gin Dr., Evening Shade, 82002138

White County

Roper House (White County MPS), Hill Street, McRae, 91001346

IOWA

Lee County

Keokuk Union Depot, 200 Exchange St., Keokuk, 99000452

[FR Doc. 01–31773 Filed 12–26–01; 8:45 am]

BILLING CODE 3510–70–P

DEPARTMENT OF JUSTICE

Notice of Lodging of Consent Decree Pursuant to the Clean Water Act

In accordance with Departmental policy, including 28 CFR 50.7, notice is hereby given that a proposed Consent Decree in *United States of America and State of Louisiana* v. *City of Baton Rouge and Parish of East Baton Rouge,* Civil Action No. 01–978–B–M–3, was lodged on November 13, 2001, with the United States District Court for the Middle District of Louisiana.

The proposed Consent Decree settles an action brought under Clean Water Act (''CWA'') Section 301, 33 U.S.C. 1311, for civil penalties and injunctive relief for violations related to the publically owned treatment works owned and operated by the City/Parish. The Consent Decree resolves all claims in the Complaint and provides for injunctive relief; a civil penalty of $729,500; a $1.125 million supplemental environmental project that will connect certain neighborhoods to the sewage treatment system; and payment of $216,000 in stipulated penalties which accrued under a prior Consent Decree. The injunctive relief will require the City/Parish to implement specified projects including a 13–15 year project to improve its sewage collection system, a Sanitary Sewer Overflow Response Plan to project the public health by responding to overflows, and an extensive preventive maintenance program.

The Department of Justice will receive, for a period of thirty (30) days from the date of this publication, comments relating to the proposed Consent Decree. Comments should be addressed to the Assistant Attorney General for the Environmental and Natural Resources Division, United States Department of Justice, Washington, D.C. 20530, and should refer to *United States and Louisiana* v. *Baton Rouge.* No. 01–978–B–M–3 (M.D. La.) DOJ Ref. #90–5–1–1–2769/1.

The proposed Consent Decree may be examined at the office of the United States Attorney, Middle District of Louisiana, 777 Florida St., Baton Rouge, LA 70801 and the office of the U.S. Environmental Protection Agency, Region 6, 1445 Ross Avenue, Dallas, Texas 75202. A copy of the proposed Consent Decree may be obtained by mail from the Consent Decree Library, P.O. Box 7611, Washington, D.C. 20044–7611. When requesting a copy please refer to *United States and Louisiana* v. *Baton Rouge.* No. 01–978–B–M–3 (M.D. La.), DOJ Ref. # 90–5–1–1–2769/1 and enclose a check in the amount of $67.75 (25 cents per page reproduction costs), payable to the ''Consent Decree Library.''

Thomas A. Mariani, Jr.,

Assistant Chief, Environmental Enforcement Section, Environment and Natural Resources Division.

[FR Doc. 01–31789 Filed 12–26–01; 8:45 am]

BILLING CODE 4410–15–M

DEPARTMENT OF JUSTICE

Notice of Lodging of Consent Decree Pursuant to the Clean Water Act

Notice is hereby given that a consent decree in *United States* v. *Chevron U.S.A. Production Company* Civil Action No. 01–D–1921 (D. CO) was lodged with the District Court for the District of Colorado on September 28, 2001. This notice was previously published in the **Federal Register** on October 15, 2001 and the public was given 30 days to comment. No comments were received. However, because of severe disruption in the mail service, the United States is unable to conclude with certainty that any comments mailed in response to that notice would have been received. As a result, the United States is providing this second opportunity for comment. Any prior commenter should resubmit their comments as directed below.

Under this Consent Decree Chevron shall pay a civil penalty and perform injunctive relief to resolve claims alleging violations of the CWA, 33 U.S.C. 1251 *et seq.* The Compliant asserts claims pursuant to section 301(a) and 311(b)(3) of the CWA, 33 U.S.C. 1311(a) & 1321(b)(3), for spills of produced water and oil from pipelines at Chevron's Rangely Weber Sand Unit and oil exploration and production unit, in Rangely, Colorado. Under the terms of the settlement, Chevron shall pay a $750,000 civil penalty and perform work over the next few years at the Rangely Unit in an effort to achieve compliance with the Act.

The Department of Justice will receive, for a period of thirty (30) days from the date of this publication, comments relating to the proposed consent decree. Comments should be sent via telefax to the Assistant Attorney General for the Environment and Natural Resources Division, Department of Justice, at (202) 616–6583, or, alternatively, mailed to the United States Attorney's Office, District of Colorado, 1225 17th Street, Suite 700, Denver, Colorado 80202 and should refer to *United States* v. *Chevron U.S.A. Production Company* Civil Action No. 01–D–1921 (D. Co), DOJ Ref. #90–5–1–1–4513.

The proposed consent decree may be examined at the Office of United States Attorney, District of Colorado, 1951 Stout St., Suite 1200, Denver Co, 80294 (303) 454–0100. A copy of the proposed consent decree may be obtained by mail from the Department of Justice Consent Decree Library, P.O. Box 7611, Washington, DC 20044. In requesting a copy, please refer to the referenced case and enclose a check in the amount of $9.00 (25 cents per page reproduction costs, including attachments), payable to the Consent Decree Library.

Bob Brook,

Assistant Section Chief, Environmental Enforcement Section, Environment and Natural Resources Division.

[FR Doc. 01–31781 Filed 12–26–01; 8:45 am]

BILLING CODE 4410–15–M

DEPARTMENT OF JUSTICE

Notice of Lodging of Consent Decree Pursuant to the Resource Conservation and Recovery Act

In accordance with the policy of the Department of Justice, notice is hereby given that a proposed consent decree in *United States* v. *Clean Harbors Inc., et al.,* Civ. No. C1–01–821, was lodged with the United States District Court for the Southern District of Ohio, on November 28, 2001. That action was brought against defendants pursuant to the Resource Conservation and Recovery (RCRA) seeking civil penalties for certain violations of the State RCRA permit for the facility, which is located in Cincinnati, Ohio. The decree requires defendants to pay $400,000.00 in civil penalties, to change certain procedures at the facility concerning hazardous waste analysis and handling, and to apply to the Ohio Environmental Protection Agency for permit modifications associated with these procedures.

The Department of Justice will receive comments relating to the proposed consent decree for a period of 30 days from the date of this publication. Comments should be addressed to the Assistant Attorney General of the Environment and Natural Resources Division, Department of Justice, Washington, DC 20503. All comments should refer to *United States* v. *Clean Harbors, Inc., et al.,* DJ# 90–7–1–06612.

The proposed consent decree may be examined at the office of the United States Attorney for the Southern District of Ohio, 100 East Fifth Street, 220 Potter Stewart Courthouse, Cincinnati, Ohio 45202; and at the Region V office of the

Environmental Protection Agency, 77 West Jackson Boulevard, Chicago, Illinois 60604–3590. A copy of the proposed consent decree may be obtained in person or by mail from the Department of Justice Consent Decree Library, P.O. Box 7611, Washington, DC 20044–7611. In requesting a copy, please enclose a check in the amount of $6.00 (25 cents per page reproduction costs) payable to the Consent Decree Library. When requesting a copy, please refer to *United States* v. *Clean Harbors, Inc., et al.,* DJ# 90–7–1–06612.

Catherine R. McCabe,

Deputy Chief, Environmental Enforcement Section, Environment and Natural Resources Division.

[FR Doc. 01–31786 Filed 12–26–01; 8:45 am]

BILLING CODE 4410–15–M

DEPARTMENT OF JUSTICE

Notice of Lodging of Consent Decrees Pursuant to the Comprehensive Environmental Response, Compensation, and Liability Act and the Clean Air Act

In accordance with 28 CFR § 50.7 and Departmental policy, notice is hereby given that on December 5, 2001, a proposed consent decree in the case captioned *United States* v. *Cohen, et al.,* Civil Action No. 96 C 7801 (N.D. Ill.), was lodged with the United States District Court for the Northern District of Illinois. The proposed consent decree relates to the Standard Scrap Metal/Chicago International Exporting Site located at 4004–4020 South Wentworth and 4000–4027 South Wells Streets in Chicago, Illinois. The proposed consent decree would resolve civil claims of the United States for recovery of past response costs under Section 107 of the Comprehensive Environmental Response, Compensation, and Liability Act, as amended, 42 U.S.C. 9607 (''CERCLA''), as well as claims for civil penalties under section 104 of CERCLA, and for civil penalties and injunctive relief under section 113 of the Clean Air Act, 42 U.S.C. 7413, against Steven Cohen, Lawrence A. Cohen, Chicago International Chicago, Inc., and Chicago International Exporting (''Settling Defendants''). Under the proposed consent decree, the Settling Defendants paid the United States $500,000 in partial reimbursement of past response costs: $105,000 in civil penalties for violations of section 104 of CERCLA; and $105,000 in civil penalties for violations of the Clean Air Act. The Settling Defendants also certified that they had removed from their property the metal sorting lines and metal shredding lines that were the subject of the CAA violations.

The Department of Justice will receive, for a period of thirty (30) days from the date of this publication, comments relating to the proposed comment decree. Comments should be addressed to the Assistant Attorney General of the Environment and Natural Resource Division, Department of Justice, Washington, D.C. 20530, and should refer to *United States* v. *Cohen, et al.,* Civil Action No. 96 C 7801 (N.D. Ill.), and DOJ Reference No. 90–11–3–1414A.

The proposed consent decree may be examined at: (1) the Office of the United States Attorney for the Northern District of Illinois, 219 South Dearborn St., Chicago, Illinois, 60604; and (2) the United States Environmental Protection Agency (Region 5), 77 West Jackson Boulevard, Chicago, Illinois 60604–3590. Copies of the proposed consent decree may be obtained by mail from the Department of Justice Consent Decree Library, P.O. Box 7611, Washington, DC 20044. In requesting copies, please refer to the above-referenced case and DOJ Reference Number and enclose a check for $6.50 (25 cents per page reproduction cost) made payable to the Consent Decree Library.

William D. Brighton,

Assistant Section Chief, Environmental Enforcement Section, Environmental and Natural Resources Division.

[FR Doc. 01–31782 Filed 12–26–01; 8:45 am]

BILLING CODE 4410–15–M

DEPARTMENT OF JUSTICE

Notice of Lodging of Consent Decree Pursuant to the Comprehensive Environmental Response, Compensation and Liability Act

In accordance with Departmental policy, 28 CFR § 50.7, 38 FR 19029, and consistent with 42 U.S.C. 9622, notice is hereby given that on December 10, 2001, a proposed consent decree in *United States and California Department of Toxic Substances Control* v. *Del Norte County,* Civil Action No. 01–4847 JCS, was lodged with the United States District Court for the Northern District of California. The proposed consent decree resolves claims under Section 106 and 107 of the Comprehensive Environmental Response, Compensation, and Liability Act (''CERCLA''), 42 U.S.C. 9606 and 9607, regarding the release and/or threat of release of hazardous substances at and from the Del Norte County Pesticide Storage Area Superfund Site near Crescent City, California. The settler is the owner/operator of the site which was centralized storage area for pesticide and herbicide containers. The accumulated containers, exposed to the elements, released hazardous substances.

Pursuant to the proposed settlement, the County shall continue to perform the remaining response action for the Site consisting of groundwater monitoring and implementation of land use restrictions. The County also shall reimburse the United States and the State in the amount of $50,000 apiece for certain past response costs. The settlement amount is based on the County's representation as to its financial condition.

The Department of Justice will receive for a period of thirty (30) days from the date of this publication comments relating to the proposed consent decree. Comments should be sent simultaneously to the following: (1) By facsimile (202) 514–2583 and U.S. mail addressed to the Assistant Attorney General of the Environment and Natural Resources Division, Department of Justice, P.O. Box 7611, Benjamin Franklin Station, Washington, DC 20044; (2) Charles O'Connor, Assistant U.S. Attorney, 450 Golden Gate Avenue, San Francisco, CA 94102; and (3) Rose Fua, Deputy Attorney General, 1515 Clay Street, Oakland, CA 94612. Comments should refer to *United States and California Dept. of Toxic Substances Control* v. *Del Norte County,* Civil Action No. 01–4847 JCS, D.J. Ref. 90–11–3–836.

The proposed consent decree may be examined at either of the following locations: (1) The Office of the United States Attorney, Northern District of California; or (2) Region 9, Office of the Environmental Protection Agency, 75 Hawthorne Street, San Francisco, California. A copy of the consent decree can be obtained (without attachments) by facsimile request ((202) 514–0997) sent to the Department of Justice Consent Decree Library, P.O. Box 7611, Washington, DC 20044. To receive a copy of the consent decree (without attachments), a party will be required to provide a check in the amount of $15.00 (25 cents per page reproduction cost) payable to the Consent Decree Library.

Ellen Mahan,

Assistant Section Chief, Environmental Enforcement Section, Environment and Natural Resources Division.

[FR Doc. 01–31783 Filed 12–26–01; 8:45 am]

BILLING CODE 4410–15–M

DEPARTMENT OF JUSTICE

Notice of Lodging of Consent Decree Under the Comprehensive Environmental Response, Compensation, and Liability Act (''CERCLA'')

Consistent with Departmental policy, 28 CFR 50.7 and 38 FR 19029, notice is hereby given that on November 13, 2001, a proposed Consent Decree in *United States* v. *Frederick Gendron, et al.,* Civil Action No. 01–422–JD, was lodged with the United States District Court for the District of New Hampshire. The proposed Consent Decree will resolve the United States' claim under the Comprehensive Environmental Response, Compensation, and Liability Act of 1980, 42 U.S.C. 9607, as amended (''CERCLA''), on behalf of the U.S. Environmental Protection Agency (''EPA'') against the defendant relating to the Gendron Junkyard Site located at 11–13 Hobbs Road in Pelham, New Hampshire (the ''Site''). The Complaint alleges that the defendants are liable under Section 107 of CERCLA, 42 U.S.C. 9607, for recovery of response costs incurred at or in connection with the release or threatened release of hazardous substances at the Site.

The Consent Decree requires the Settling Defendants to pay to the U.S. EPA Hazardous Substance Superfund $650,000 in reimbursement of past response costs, and includes a covenant not to use by the United States.

The Department of Justice will receive for a period of thirty (30) days from the date of this publication comments relating to the proposed consent decree. Any comments should be addressed to the Assistant Attorney General of the Environmental and Natural Resource Division, Department of Justice, P.O. Box 7611, Ben Franklin Station, Washington, DC 20044–7611, and should refer to *United States* v. *Frederick Gendron, et al.,* Civil Action No. 01–422–JD, Ref. 90–11–3–07116.

The proposed Consent Decree may be examined at the Office of the United States Attorney, District of New Hamsphire, U.S. Department of Justice, 55 Pleasant Street, Room 352, Concord, New Hamsphire, 03301–3904, and at U.S. EPA New England (Region 1), One Congress Street, Suite 1100, Boston, Massachusetts, 02114–2023. A copy of the proposed consent decree may be obtained by mail from the Consent Decree Library, P.O. Box 7611, Washington, DC 20044–7611. In requesting a copy, please enclose a check (there is a 25 cent per page reproduction cost) in the amount of $6.00 payable to the Consent Decree Library.

Ronald Gluck,

Assistant Section Chief, Environmental Enforcement Section, Environment and Natural Resources Division, U.S. Department of Justice.

[FR Doc. 01–31790 Filed 12–26–01; 8:45 am]

BILLING CODE 4410–15–M

DEPARTMENT OF JUSTICE

Notice of Lodging of Proposed Agreed Amendments to Consent Decree Pursuant to The Comprehensive Environmental Response, Compensation and Liability Act

In accordance with the policy of the Department of Justice, notice is hereby given that proposed Agreed Amendments to Consent Decree in *United State of America* v. *City of Grand Rapids, Michigan,* Civil Action No. 1:99 CV 388, were lodged with the United States District Court for the Western District of Michigan, Southern Division, on December 10, 2001. The original consent decree, entered by the Court on August 10, 2000, involved the settlement of claims brought by the United States, pursuant to the Comprehensive Environmental Response, Compensation and Liability Act, 42 U.S.C. 9601 *et seq.,* against 53 Settling Defendants for reimbursement of response costs and injunctive relief in connection with the Butterworth No. 2 Landfill Superfund Site (''Site'') located in Grand Rapids, Kent County, Michigan. The proposed amendments represent a settlement of claims by the United States against 18 additional Settling Defendants and seeks to add them to the consent decree.

Under this settlement with the United States, the 18 additional Settling Defendants will collectively pay $1,250,000 to the Settling Work Defendants who will then implement the entire remedy for the Site as set forth in the Record of Decision issued by the United States Environmental Protection Agency in March 1992 and as modified by an Explanation of Significant Differences dated October 23, 1998. The 18 additional Settling Defendants will also pay $131,500 to the United States for past response costs incurred in connection with the Site.

The Department of Justice will receive comments relating to the proposed amendments for a period of 30 days from the date of this publication. Comments should be addressed to the Assistant Attorney General of the Environment and Natural Resources Division, Department of Justice, Washington, D.C. 20530, and should refer to *United States* v. *City of Grand Rapids, Michigan, et. al.,* D.J. Ref. 90–11–2–145A.

The proposed Agreed Amendments to Consent Decree may be examined at the office of the United States Attorney for the Western District of Michigan, 330 Ionia Avenue, N.W., Grand Rapids, Michigan 49503; and at the Region 5 office of the Environmental Protection Agency, 77 West Jackson Boulevard, Chicago, Illinois 60604–3590. A copy of the proposed Agreed Amendments to Consent Decree may be obtained by mail from the Justice Consent Decree Library, P.O. Box 7611, Washington, DC 20044–7611. In requesting a copy of the proposed amendments, please enclose a check in the amount of $3.00 (25 cents per page reproduction cost) payable to the Consent Decree Library and refer to *United States* v. *City of Grand Rapids, Michigan, et. al.,* D.J. Ref. 90–11–2–145A. To obtain a copy of the original Consent Decree, please enclose a check in the amount of $33.75 (25 cents per page reproduction cost) payable to the Consent Decree Library and refer to *United States* v. *City of Grand Rapids, Michigan, et. al.,* D.J. Ref. 90–11–2–145A.

William D. Brighton,

Assistant Chief, Environmental Enforcement Section, Environment and Natural Resources Division.

[FR Doc. 01–31784 Filed 12–26–01; 8:45 am]

BILLING CODE 4410–15–M

DEPARTMENT OF JUSTICE

Notice of Lodging of Consent Decree Under the Comprehensive Environmental Response, Compensation, and Liability Act

In accordance with 28 CFR 50.7 and section 122 of the Comprehensive Environmental Response, Compensation, and Liability Act (''CERCLA''), 42 U.S.C. 9622, the Department of Justice hereby gives notice that on December 13, 2001, a proposed consent decree in the consolidated actions *United States* v. *International Paper Co., et al.,* Civil Action No. 01–C–693–C and *International Paper Co.* v. *City of Tomah, WI, et al.,* Civil Action No. 00–C–539–C was lodged with the United States District Court for the Western District of Wisconsin.

In this action, the United States, under CERCLA Section 107, seeks reimbursement from International Paper and the City of Tomah, Wisconsin of response costs incurred and to be incurred for response actions taken at or

in connection with the release or threatened release of hazardous substances at the Tomah Municipal Sanitary Landfill site in Monroe County, Wisconsin (''the Site'').

In the consolidated action, International Paper Co., under CERCLA Section 113(f), seeks reimbursement from the City of Tomah, Wisconsin and the United States Department of Veterans Affairs of certain costs International Paper allegedly incurred in response to the release or threatened release of hazardous substances at the site.

The consent decree provides that: (1) International Paper shall complete the remedial action for Operable Unit 1 at the Site, commenced pursuant to a CERCLA Section 106, 42 U.S.C. 9606, unilateral administrative order issued by the U.S. Environmental Protection Agency (''U.S. EPA'') to International Paper; (2) the City of Tomah shall pay $16,000 to the United States in reimbursement of the United States' past costs at the Site; and (3) the United States, on behalf of the Department of Veteran Affairs, shall pay $893,651.57 to International Paper to ''cash out'' the United States' liability for past and future costs at Operable Unit 1.

The Department of Justice will receive for a period of thirty (30) days from the date of this publication comments relating to the consent decree. Comments should be addressed to the Assistant Attorney General, Environment and Natural Resources Division, P.O. Box 7611, U.S. Department of Justice, Washington, DC 20044–7611, and should refer to *United States* v. *International Paper Co., et al.,* D.J. Ref. 90–11–2–1317.

The Consent Decree may be examined at the Office of the United States Attorney, 600 West Washington, Ave., Ste. 200, Madison, WI 53701–1585, and at U.S. EPA Region 5, 77 West Jackson Boulevard, Chicago, IL 60604 (contact Timothy Thurlow at (312) 886–6623). A copy of the consent decree may also be obtained by mail from the Consent Decree Library, P.O. Box 7611, U.S. Department of Justice, Washington, DC 20044–7611. In requesting a copy, please enclose a check in the amount of $24.50 (25 cents per page reproduction cost) payable to the Consent Decree Library.

William Brighton,

Assistant Chief, Environmental Enforcement Section, Environment and Natural Resources Division.

[FR Doc. 01–31780 Filed 12–26–01; 8:45 am]

BILLING CODE 4410–15–M

DEPARTMENT OF JUSTICE

Notice of Lodging of Amendments to Consent Decree

Under 28 CFR 50.7, notice is hereby given that on November 29, 2001, amendments to the Consent Decree filed in *United States* v. *Marine Shale Processors, Inc.,* Civ. No. CV90–1240, were lodged with United States District Court for the Western District of Louisiana. The original Consent Decree was filed on February 19, 1998, and was modified by an Order of the Court dated February 23, 1999, and again on June 13, 2001.

In this action against Marine Shale Processors, Inc., (''MSP'') the United States sought to recover civil penalties and enjoin violations to the Resource Conservation and Recover Act (''RCRA''), 42 U.S.C. 6901 *et seq.,* the Clean Water Act, 33 U.S.C. 1251 *et seq.,* and the Clean Air Act 42 U.S.C. 7413. The United States also sought relief under the Comprehensive Environmental Response, Compensation, and Liability Act (''CERCLA''), 42 U.S.C. 9604, 9606, and 9607. MSP operated a facility in Morgan City, Louisiana that treated hazardous waste by combustion.

These amendments extend the deadline by which a new company, CTX, Inc. must purchase the assets and liabilities of MSP, and extend the ''Continuing Election'' provision of the Consent Decree. The amendments to Section IV and V of the Consent Decree provide that these deadlines are extended until January 11, 2002.

The Department of Justice will receive for a period of ten (10) days from the date of this publication comments relating to the Consent Decree. Comments should be addressed to the Assistant Attorney General of the Environment and Natural Resources Division, Department of Justice, Washington, DC 20530, and should refer to *United States* v. *Marine Shale Processors, Inc.,* D.J. Ref. 90–11–2–204C. In light of recent mail delays, commenters should notify Darlene Lyons, Department of Justice, of the submission of any comments, by telephone at 202–514–1605.

The consent decree amendments may be examined at the Office of the United States Attorney, Hale Boggs Federal Building, 501 Magazine Street, New Orleans, LA 70130, at U.S. EPA Region VI, 1445 Ross Avenue Dallas, TX 75202–2733, and at the Consent Decree Library, P.O. Box 7611, U.S. Department of Justice, Washington, DC 20044–7611. A copy of the consent decree amendments may be obtained by mail from the Consent Decree Library, P.O. Box 7611, U.S. Department of Justice, Washington, DC 20044–7611. In requesting a copy, please enclose a check in the amount of $1.00 (25 cents per page reproduction cost) payable to the Consent Decree Library.

Thomas A. Mariani, Jr.,

Assistant Chief, Environmental Enforcement Section, Environment and Natural Resources Division.

[FR Doc. 01–31791 Filed 12–26–01; 8:45 am]

BILLING CODE 4410–15–M

DEPARTMENT OF JUSTICE

Notice of Lodging of Consent Decree Under Clean Water Act

In accordance with Departmental policy, 28 CFR 50.7, notice is hereby given that a proposed consent decree in *United States* v. *Monongahela Power Company, Inc. (d/b/a Allegheny Power),* C.A. No. 1 1:01–CV–6, was lodged on November 9, 2001, with the United States District Court for the Northern District of West Virginia. The consent decree resolves the United States' claims against the defendant, pursuant to the Federal Water Pollution Control Act, also known as the Clean Water Act, 33 U.S. C. 1251–1387, as amended by the Oil Pollution Act of 1990, Pub. L. 101–380 (''CWA''), and 40 CFR 112.4. Specifically, the consent decree resolves the United States' claim against the defendant for violating Sections 301 and 311 of the CWA, 33 U.S.C. 1311, 1321, with respect to an oil spill that occurred at the defendant's Belmont Substation, located in Pleasants County, West Virginia. Further, the consent decree resolves the United States' claim against defendant for failing to submit a copy of its Spill Prevention Control and Countermeasures (''SPCC'') Plan to the Environmental Protection Agency within 60 days after the spill, as required by 40 CFR 112.4.

Under the consent decree, the defendant will pay a total civil penalty in the amount of $252,000 to resolve the violations with respect the discharge and failure to submit its SPCC Plan in a timely manner. In addition, the defendant has agreed to implement agreed-upon injunctive relief measures, which include, *inter alia,* replacement of the transformer that failed and caused the discharge, upgrading containment around certain transformers at the Substation, and adding additional equipment at the Substation that will aid in addressing any future spills. The civil penalty is due to be paid within thirty (30) days after entry of the consent decree by the Court.

The Department of Justice will receive, for a period of thirty (30) days from the date of this publication, comments relating to the proposed consent decree. Comments should be addressed to the Acting Assistant Attorney General for the Environment and Natural Resources Division, Department of Justice, Washington, DC 20530, and should refer to *United States* v. *Monongahela Power Company, Inc.* and DOJ Reference No. 90–5–1–1–06477. The comments should be faxed, not mailed, to the Acting Assistant Attorney General at 202/616–6583. Alternatively, the comments may be mailed to the Office of the United States Attorney, ATTN: Patrick M. Flatley, 1100 Main Street, Suite 200, Wheeling, West Virginia 26003.

The proposed consent decree may be examined at the Office of the United States Attorney, 1100 Main Street, Suite 200, Wheeling, West Virginia 26003; and the Region III Office of the Environmental Protection Agency, 1650 Arch Street, Philadelphia, Pennsylvania 19103. A copy of the proposed decree may be obtained by mail from the Department of Justice Consent Decree Library, P.O. Box 7611, Washington, DC 20044. In requesting a copy, please refer to the referenced case and enclose a check in the amount of $10.50 (.25 cents per page production costs), payable to the Consent Decree Library.

Robert D. Brook,

Assistant Chief, Environmental Enforcement Section, Environment and Natural Resources Division.

[FR Doc. 01–31787 Filed 12–26–01; 8:45 am]

BILLING CODE 4410–15–M

DEPARTMENT OF JUSTICE

Notice of Lodging of a Consent Decree Pursuant to the Comprehensive Environmental Response, Compensation, and Liability Act

Notice is hereby given that a proposed consent decree in *United States* versus *MRC Holdings, Inc., et al.,* Civil No. 8:01–CV–2289–T–23MSS, was lodged on November 30, 2001, with the United States District Court for the Middle District of Florida, Tampa Division (''MRC Decree''). The propose Consent Decree would resolve certain claims under Sections 106 and 107 of the Comprehensive Environmental Response, Compensation, and Liability Act of 1980, 42 U.S.C. 9606 and 9607, as amended, to recover response costs incurred by the Environmental Protection Agency in connection with the release of hazardous substances at the at the MRI Superfund Site (''the Site'') in Tampa, Hillsborough County, Florida. The United States alleges that MRC Holdings, Inc., Proler International Corp., and MRI Corporation (''Settling Defendants'') are liable as persons who owned and/or operated the Site at the time of the release or threatened release of a hazardous substances. Under the proposed Consent Decree, Settling Defendants have agreed to: (a) Perform the remedy selected by the Environmental Protection Agency to clean up Operable Unit #1 (soil contamination) and the remedial investigation and feasibility study for Operation Unit #2 (groundwater contamination) at the Site; (b) EPA's past response costs in the amount of $700,000.00; and (c) pay future Site costs that EPA may incur. The proposed Decree resolves the liability of Defendants arising out of, and with respect to, the claims for relief asserted in the Complaint fill concomitant with this proposed Decree.

The Department of Justice will receive, for a period of thirty (30) days from the date of this publication, comments relating to the proposed Consent Decree. Comments should be addressed to the Assistant Attorney General for the Environment and Natural Resources Division, Department of Justice, P.O. Box 7611, Washington, D.C. 20530, and should refer to *United States* versus *MRC Holdings, Inc., et al.,* M.D. FLA., Civil No. 8:01–CV–2289–T–23MSS, DOJ Ref. #90–11–2–07053.

The Consent Decree may be examined at the Region 4 Office of the Environmental Protection Agency, 61 Forsyth Street, Atlanta, GA 30303, and at the United States Attorney's Office for the Middle District of Florida, 400 North Tampa Street, Suite 3200, Tampa, Florida c/o Warren A. Zimmerman, Chief, Civil Division, United States Attorney's Office. A copy of the proposed Consent Decree (without attachments) may be obtained by mail from the Consent Decree Library, Post Office Box 7611, Washington, D.C. 20044. In requesting copies please refer to the reference case and enclose a check in the amount of $10.75 (25 cents per page reproduction costs) payable to the Consent Decree Library.

Ellen M. Mahan,

Assistant Section Chief, Environmental Enforcement Section, Environment and Natural Resources Division.

[FR Doc. 01–31785 Filed 12–26–01; 8:45 am]

BILLING CODE 4410–15–M

DEPARTMENT OF JUSTICE

Notice of Lodging of Consent Decree Pursuant to Comprehensive Environmental Response, Compensation, and Liability Act

In accordance with Departmental policy, 28 CFR § 50.7, notice is hereby given that, on November 20, 2001, a proposed CONSENT DECREE BETWEEN THE UNITED STATES OF AMERICA AND CITIZENS LEGAL ENVIRONMENTAL ACTION NETWORK, INC. AND PREMIUM STANDARD FARMS, INC. AND CONTINENTAL GRAIN COMPANY, INC. (the Decree) in *CLEAN and United States* v. *PSF*, Civil Action No. 97–6073–CV–SJ–6 (W.D. Mo.), and *CLEAN* v. *Continental,* Civil Action No. 98–6099–CV–W–6 (W.D. Mo.), was lodged with the United States District Court for the Western District of Missouri.

The Decree resolves claims for injunctive relief and civil penalties pursuant to the Clean Water Act, the Clean Air Act, and the reporting requirements of Section 103 of the Comprehensive Environmental Response, Compensation, and Liability Act and the Emergency Planning and Community Right to Know Act against Premium Standard Farms, Inc. and Continental Grain Company, Inc. arising out of their operation of concentrated animal feeding operations (CAFOs) with more than 1.25 million pigs in Missouri. Pursuant to the Decree, defendants will implement technological changes to reduce toxics in animal wastes and air emissions from barns, lagoons and land application of wastes; conduct air monitoring; and pay a $350,000 civil penalty (in addition to $650,000 already paid under a prior State settlement).

For thirty (30) days following this publication, the Department of Justice will receive comments relating to the proposed decree. Comments should be addressed to the Assistant Attorney General of the Environmental and Natural Resources Division, United States Department of Justice, Post Office Box 7611, Washington, DC 20044–7611, and should refer to *CLEAN and United States* v. *PSF*, Civil Action No. 97–6073–CV–SJ–6 (W.D. Mo.) and *CLEAN* v. *Continental*, Civil Action No. 98–6099–CV–W–6 (W.D. Mo.) DOJ nos. 90–5–1–1–06806 and 90–5–1–1–06806/1. Alternatively, because of potential mail delays associated with recent events, comments may be sent by facsimile to (202) 514–4180, with attention to the EES-Region VII Group.

The proposed decree may be examined at the offices of the United States Attorney, Western District of

Missouri, Charles Evans Whittaker Courthouse, 400 East 9th Street—5th Floor, Kansas City, Missouri 64106, and the United States Environmental Protection Agency—Region VII, 901 North 5th Street, Kansas City, Kansas 66101. The decree may also be obtained by mail from the United States Department of Justice Consent Decree Library, Post Office Box 7611, Washington, D.C. 20044–7611. In requesting a copy, please enclose a check in the amount of $56.00 (25 cents per page reproduction cost).

Robert E. Maher, Jr.,

Assistant Chief, Environmental Enforcement Section, Environment and Natural Resources Division.

[FR Doc. 01–31788 Filed 12–26–01; 8:45 am]

BILLING CODE 4410–15–M

DEPARTMENT OF JUSTICE

Notice of Lodging of Consent Decree Pursuant to the Comprehensive Environmental Response, Compensation and Liability Act, 42 U.S.C. 9601 et seq.

In accordance with Departmental policy, 28 CFR 50.7, notice is hereby given that a third proposed consent decree in *United States* v. *Viacom, Inc. and Schindler Elevator Corporation,* Civil Action No. 1:01–CV–123, was lodged on November 1, 2001, with the United States District Court for the Middle District of Pennsylvania.

The proposed Consent Decree concerns the Westinghouse Elevator Plant Superfund Site (''Site''), which is located on approximately 90 acres, and has its southern boundary adjacent to part of the Gettysburg Battlefield National Park. The Site is located about 1.5 miles north of downtown Gettysburg in Cumberland Township, Adams County, Pennsylvania. Pursuant to the proposed consent decree and section 107(a) of the Comprehensive Environmental Response, Compensation and Liability Act (''CERCLA''), 42 U.S.C. 9607(a), the defendants will pay the United States for unreimbursed past costs at the Site, in the amount of $569,000 plus certain interest in connection with the Site.

The Department of Justice will receive, for a period of thirty (30) days from the date of this publication, comments relating to the proposed consent decree. Comments should be addressed to the Assistant Attorney General for the Environment and Natural Resources Division, Department of Justice, Washington, DC 20530, and should refer to *United States* v. *Viacom, Inc. and Schindler Elevator Corporation,* DOJ Ref. #90–11–3–1004/1.

The proposed consent decree may be examined at the office of the United States Attorney, 228 Walnut Street, Suite 220, Harrisburg, Pennsylvania 17108 and the Region 3 Office of the U.S. Environmental Protection Agency, 1650 Arch Street, Philadelphia, PA 19103–2029. A copy of the proposed consent decree may also be obtained by mail from the Consent Decree Library, U.S. Department of Justice, P.O. Box 7611, Washington, DC 20044–7611. (202) 624–0892. In requesting a copy please refer to the referenced case and enclose a check (25 cents per page reproduction costs) in the amount of $5.25 for the consent decree (21 pages), payable to the Consent Decree Library.

Robert Brook,

Assistant Chief, Environmental Enforcement Section, Environment and Natural Resources Division.

[FR Doc. 01–31792 Filed 12–26–01; 8:45 am]

BILLING CODE 4410–01–M

DEPARTMENT OF JUSTICE

Drug Enforcement Administration

Agency Information Collection Activities: Proposed Collection; Comment Request

ACTION: 30-day notice of information collection under review: Extension of a currently approved collection; reports of suspicious orders or theft/loss of listed chemicals/machines.

The Department of Justice (DOJ), Drug Enforcement Administration (DEA), has submitted the following information collection request to the Office of Management and Budget (OMB) for review and approval in accordance with the Paperwork Reduction Act of 1995. The proposed information collection is published to obtain comments from the public and affected agencies. This proposed information collection was previously published in the **Federal Register** at Volume 66, Number 201, pages 52777–52778 on October 17, 2001, allowing for a 60 day comment period.

The purpose of this notice is to allow for an additional 30 days for public comment until January 28, 2002. This process is conducted in accordance with 5 CFR 1320.10.

Written comments and/or suggestions regarding the items contained in this notice, especially the estimated public burden and associated response time, should be directed to The Office of Management and Budget, Office of Information and Regulatory Affairs, Attention Department of Justice Desk Officer, Washington, DC 20503. Additionally, comments may be submitted to OMB via facsimile to (202)–395–7285.

Written comments and/or suggestions from the public and affected agencies concerning the proposed collection of information should address one or more of the following four points:

(1) Evaluate whether the proposed collection of information is necessary for the proper performance of the function of the agency, including whether the information will have practical utility;

(2) Evaluate the accuracy of the agency's estimate of the burden of the proposed collection of information, including the validity of the methodology and assumptions used;

(3) Enhance the quality, utility, and clarity of the information to be collected; and

(4) Minimize the burden of the collection of information on those who are to respond, including through the use of appropriate automated, electronic, mechanical or other technological collection techniques or other forms of information technology, e.g., permitting electronic submission of responses.

Overview of This Information Collection

(1) *Type of information collection:* Extension of a currently approved collection.

(2) *The title of the form/collection:* Reports of Suspicious Orders or Theft/Loss of Listed Chemical/Machines.

(3) *The agency form number, if any, and the applicable component of the Department sponsoring the collection: Form No.:* None. Office of Diversion Control, Drug Enforcement Administration, U.S. Department of Justice.

(4) *Affected public who will be asked or required to respond, as well as a brief abstract: Primary:* Business or other for-profit. *Other:* Individuals or households. The Chemical Diversion and Trafficking Act of 1988 created, and the Domestic Chemical Diversion Control Act of 1993 amended, DEA's chemical reporting requirements to remove the exemption for certain drugs which contain ephedrine. The Comprehensive Methamphetamine Control Act of 1996 removed the exemption for combination ephedrine, pseudoephedrine and phenylpropanolamine drug products. Persons who previously were not required to file reports regarding suspicious orders, thefts and loss of these products now must do so.

(5) *An estimate of the total number of respondents and the amount of time estimated for an average respondent to respond/reply:* 199 respondents with an average 15 minutes per response.

(6) *An estimate of the total public burden (in hours) associated with the collection:* 499 annual burden hours.

If additional information is required contact: Mr. Robert B. Briggs, Clearance Officer, United States Department of Justice, Information Management and Security Staff, Justice Management Division, United States Department of Justice, Patrick Henry Building, Suite 1600, 601 D Street NW., Washington, DC 20004.

Dated: December 18, 20001.

Robert B. Briggs,

Depart Clearance Officer, United States Department of Justice.

[FR Doc. 01–31677 Filed 12–26–01; 8:45 am]

BILLING CODE 4410–09–M

DEPARTMENT OF JUSTICE

Drug Enforcement Administration

Agency Information Collection Activities: Proposed Collection; Comment Request

ACTION: 30-day notice of information collection under review: Extension of a currently approved collection; U.S. official order forms for schedules I and II controlled substances (Accountable Forms), order forms requisition.

The Department of Justice (DOJ), Drug Enforcement Administration (DEA), has submitted the following information collection request to the Office of Management and Budget (OMB) for review and approval in accordance with the Paperwork Reduction Act of 1995. The proposed information collection is published to obtain comments from the public and affected agencies. This proposed information collection was previously published in the **Federal Register** Volume 66, Number 201, pages 52778–52779 on October 17, 2001, allowing for a 60 day comment period.

The purpose of this notice is to allow for an additional 30 days for public comment until January 28, 2002. This process is conducted in accordance with 5 CFR 1320.10.

Written comments and/or suggestions regarding the items contained in this notice, especially the estimated public burden and associated response time, should be directed to The Office of Management and Budget, Office of Information and Regulatory Affairs, Attention Department of Justice Desk Officer, Washington, DC 20503. Additionally, comments may be submitted to OMB via facsimile to (202)–395–7285.

Written comments and/or suggestions from the public and affected agencies concerning the proposed collection of information should address one or more of the following four points:

(1) Evaluate whether the proposed collection of information is necessary for the proper performance of the function of the agency, including whether the information will have practical utility;

(2) Evaluate the accuracy of the agency's estimate of the burden of the proposed collection of information, including the validity of the methodology and assumptions used;

(3) Enhance the quality, utility, and clarity of the information to be collected; and

(4) Minimize the burden of the collection of information on those who are to respond, including through the use of appropriated automated, electronic, mechanical, or other technological collection techniques or other forms of information technology, e.g., permitting electronic submission of responses.

Overview of This Information Collection

(1) Type of information collection: Extension of a currently approved collection.

(2) The title of the form/collection: U.S. Official Order Forms for Schedules I and II Controlled Substances (Accountable Forms), Order Form Requisition.

(3) The agency form number, if any, and the applicable component of the Department sponsoring the collection: Form No.: DEA Form 222 and DEA Form 222a Office of Diversion Control, Drug Enforcement Administration, U.S. Department of Justice.

(4) Affected public who will be asked or required to respond, as well as a brief abstract: Primary: Business or other for-profit. *Other:* Individuals or households, Federal Government, and State, Local or Tribal Government. DEA–222 is used to transfer or purchase Schedule I and II controlled substances and data is needed to provide an audit of transfer and purchase. DEA–222a Requisition Form is used to obtain the DEA–222 Order Form. Respondents are DEA registrants desiring to handle these controlled substances.

(5) An estimate of the total number of respondents and the amount of time estimated for an average respondent to respond/reply: 89,908 respondents with an average 17.5 minutes per response.

(6) An estimate of the total public burden (in hours) associated with the collection: 193,508 annual burden hours.

If additional information is required contact: Mr. Robert B. Briggs, Clearance Officer, United States Department of Justice, Information Management and Security Staff, Justice Management Division, United States Department of Justice, Patrick Henry Building, Suite 1600, 601 D Street NW, Washington, DC 20004.

Dated: December 18, 2001.

Robert B. Briggs,

Department Clearance Officer, United States Department of Justice.

[FR Doc. 01–31678 Filed 12–26–01; 8:45 am]

BILLING CODE 4410–09–M

DEPARTMENT OF JUSTICE

Drug Enforcement Administration

Agency Information Collection Activities: Proposed Collection; Comment Request

ACTION: 30-day notice of information collection under review: extension of a currently approved collection; ARCOS Transaction Reporting—DEA Form 333.

The Department of Justice (DOJ), Drug Enforcement Administration (DEA), has submitted the following information collection request to the Office of Management and Budget (OMB) for review and approval in accordance with the Paperwork Reduction Act of 1995. The proposed information collection is published to obtain comments from the public and affected agencies. This proposed information collection was previously published in the **Federal Register** Volume 66, Number 201, page 52779 on October 17, 2001, allowing for a 60 day comment period.

The purpose of this notice is to allow for an additional 30 days for public comment until January 28, 2002. This process is conducted in accordance with 5 CFR 1320.10.

Written comments and/or suggestions regarding the items contained in this notice, especially the estimated public burden and associated response time, should be directed to the Office of Management and Budget, Office of Information and Regulatory Affairs, Attention Department of Justice Desk Officer, Washington, DC 20503. Additionally, comments may be submitted to OMB via facsimile to (202)–395–7285.

Written comments and/or suggestions from the public and affected agencies concerning the proposed collection of

information should address one or more of the following four points:

(1) Evaluate whether the proposed collection of information is necessary for the proper performance of the function of the agency, including whether the information will have practical utility;

(2) Evaluate the accuracy of the agency's estimate of the burden of the proposed collection of information, including the validity of the methodology and assumptions used;

(3) Enhance the quality, utility, and clarity of the information to be collected; and

(4) Minimize the burden of the collection of information on those who are to respond, including through the use of appropriate automated, electronic, mechanical, or other technological collection techniques or other forms of information technology, e.g., permitting electronic submission of responses.

Overview of This Information Collection

(1) *Type of information collection:* Extension of a currently approved collection.

(2) *The title of the form/collection:* ARCOS Transaction Reporting—DEA Form 333.

The agency form number, if any, and the applicable component of the Department sponsoring the collection: Form No.: DEA–333. Office of Diversion Control, Drug Enforcement Administration, U.S. Department of Justice.

(4) *Affected public who will be asked or required to respond, as well as a brief abstract: Primary:* Business or other for-profit. *Other:* None.

Necessary for U.S. to meet obligations under two international treaties: Single Convention on Narcotic Drugs and Psychotropic Substances. Treaties require information on the manufacture and consumption of certain substances. Information tracks substances from manufactured to sale to dispensing level.

(5) *An estimate of the total number of respondents and the amount of time estimated for an average respondent to respond/reply:* 1,126 respondents with an average 1 hour per paper response and 10 minutes per electronic response.

(6) *An estimate of the total public burden (in hours) associated with the collection:* 1,700 annual burden hours.

If additional information is required contact: Mr. Robert B. Briggs, Clearance Officer, United States Department of Justice, Information Management and Security Staff, Justice Management Division, United States Department of Justice, Patrick Henry Building, Suite 1600, 601 D Street NW, Washington, DC 20004.

Dated: December 18, 2001.

Robert B. Briggs,

Department Clearance Officer, United States Department of Justice.

[FR Doc. 01–31679 Filed 12–26–01; 8:45 am]

BILLING CODE 4410–09–M

DEPARTMENT OF JUSTICE

Drug Enforcement Administration

Agency Information Collection Activities: Proposed Collection; Comment Request

ACTION: 30-day notice of information collection under review: extension of a currently approved collection; U.S. official order forms for Schedules I and II controlled substances (ACCOUNTABLE FORMS), order form requisition.

The Department of Justice (DOJ), Drug Enforcement Administration (DEA), has submitted the following information collection request to the Office of Management and Budget (OMB) for review and approval in accordance with the Paperwork Reduction Act of 1995. The proposed information collection is published to obtain comments from the public and affected agencies. This proposed information collection was previously published in the **Federal Register** Volume 66, Number 201, pages 52778–52779 on October 17, 2001, allowing for a 60-day comment period.

The purpose of this notice is to allow for an additional 30 days for public comment until January 28, 2002. This process is conducted in accordance with 5 CFR 1320.10.

Written comments and/or suggestions regarding the items contained in this notice, especially the estimated public burden and associated response time, should be directed to The Office of Management and Budget, Office of Information and Regulatory Affairs, Attention Department of Justice Desk Officer, Washington, DC 20503. Additionally, comments may be submitted to OMB via facsimile to (202)–395–7285.

Written comments and/or suggestions from the public and affected agencies concerning the proposed collection of information should address one or more of the following four points:

(1) Evaluate whether the proposed collection of information is necessary for the proper performance of the function of the agency, including whether the information will have practical utility;

(2) Evaluate the accuracy of the agency's estimate of the burden of the proposed collection of information, including the validity of the methodology and assumptions used;

(3) Enhance the quality, utility, and clarity of the information to be collected; and

(4) Minimize the burden of the collection of information on those who are to respond, including through the use of appropriated automated, electronic, mechanical, or other technological collection techniques or other forms of information technology, e.g., permitting electronic submission of responses.

Overview of This Information Collection

(1) *Type of information collection:* Extension of a currently approved collection.

(2) *The title of the form/collection:* U.S. Official Order Forms for Schedules I and II Controlled Substances (ACCOUNTABLE FORMS), Order Form Requisition.

(3) *The agency form number, if any, and the applicable component of the Department sponsoring the collection:* Form No.: DEA Form 222 and DEA Form 222a Office of Diversion Control, Drug Enforcement Administration, U.S. Department of Justice.

(4) *Affected public who will be asked or required to respond, as well as brief abstract: Primary:* Business or other for-profit. *Other:* Individuals or households, Federal Government, and State, Local or Tribal Government. DEA–222 is used to transfer or purchase Schedule I and II controlled substances and data is needed to provide an audit of transfer and purchase. DEA–222a Requisition Form is used to obtain the DEA–222 Order Form. Respondents are DEA registrants desiring to handle these controlled substances.

(5) *An estimate of the total number of respondents and the amount of time estimated for an average respondents to respond/reply:* 89,908 respondents with an average 17.5 minutes per response.

(6) *An estimate of the total public burden (in hours) associated with the collection:* 193,508 annual burden hours.

If additional information is required contact: Mr. Robert B. Briggs, Clearance Officer, United States Department of Justice, Information Management and Security Staff, Justice Management Division, United States Department of Justice, Patrick Henry Building, Suite 1600, 601 D Street NE, Washington, DC 20004.

Dated: December 18, 2001.

Robert B. Briggs,

Department Clearance Officer, United States Department of Justice.

[FR Doc. 01–31680 Filed 12–26–01; 8:45 am]

BILLING CODE 4410–09–M

DEPARTMENT OF JUSTICE

Drug Enforcement Administration

Manufacturer of Controlled Substances; Notice of Application

Pursuant to section 1301.33(a) of Title 21 of the Code of Federal Regulations (CFR), this is notice that on September 27, 2001, Chattem Chemicals, Inc., 3801 St. Elmo Avenue, Building 18, Chattanooga, Tennessee 37409, made application by letter to the Drug Enforcement Administration (DEA) for registration as a bulk manufacturer of dextropropoxyphene (9273), a basic class of controlled substance listed in Schedule II.

The firm plans to bulk manufacture the listed controlled substance to produce products for distribution to its customers.

Any other such applicant and any person who is presently registered with DEA to manufacture such substance may file comments or objections to the issuance of the proposed registration.

Any such comments or objections may be addressed, in quintuplicate, to the Deputy Assistant Administration, Office of Diversion Control, Drug Enforcement Administration, United States Department of Justice, Washington, DC 20537, Attention: DEA Federal Register Representative (CCR), and must be filed no later than February 25, 2002.

Dated: December 18, 2001.

Laura M. Nagel,

Deputy Assistant Administrator, Office of Diversion Control, Drug Enforcement Administration.

[FR Doc. 01–31821 Filed 12–26–01; 8:45 am]

BILLING CODE 4410–09–M

DEPARTMENT OF JUSTICE

Drug Enforcement Administration

Manufacturer of Controlled Substances; Notice of Registration

By Notice dated August 24, 2001, and published in the **Federal Register** on September 6, 2001, (66 FR 46653), Chattem Chemicals, Inc., 3801 St. Elmo Avenue, Building 18, Chattanooga, Tennessee 37409, made application by renewal to the Drug Enforcement Administration (DEA) to be registered as a bulk manufacturer of the basic classes of controlled substances listed below:

Drug	Schedule
N-Ethylamphetamine (1475)	I
4-Methoxyamphetamine (7411).	I
2,5-Dimethoxyamphetamine (7396).	I
Difenoxin	I
Amphetamine (1100)	II
Methamphetamine (1105)	II
Methylphenidate (1724)	II
Pentobarbital (2270)	II
Secobarbital (2315)	II
Codeine (9050)	II
Oxycodone (9143)	II
Diphenoxylate (9170)	II
Hydrocodone (9193)	II
Meperidine (9230)	II
Morphine (9300)	II
Thebaine (9333)	II
Alfentanil (9737)	II
Sufentanil (9740)	II
Fentanyl (9801)	II

The firm plans to bulk manufacture the listed controlled substances to produce products for distribution to its customers.

No comments or objections have been received. DEA has considered the factors in Title 21, United States Code, Section 823(a) and determined that the registration of Chattem Chemicals, Inc. to manufacture the listed controlled substances is consistent with the public interest at this time. DEA has investigated Chattem Chemicals, Inc. to ensure that the company's registration is consistent with the public interest. This investigation included inspection and testing of the company's physical security systems, verification of the company's compliance with state and local laws, and a review of the company's background and history. Therefore, pursuant to 21 U.S.C. 823 and 28 CFR §§ 0.100 and 0.104, the Deputy Assistant Administrator, Office of Diversion Control, hereby orders that the application submitted by the above firm for registration as a bulk manufacturer of the basic classes of controlled substances listed above is granted.

Dated: December 18, 2001.

Laura M. Nagel,

Deputy Assistant Administrator, Office of Diversion Control, Drug Enforcement Administration.

[FR Doc. 01–31822 Filed 12–26–01; 8:45 am]

BILLING CODE 4410–09–M

DEPARTMENT OF LABOR

Office of the Secretary

Submission for OMB Review; Comment Request

December 13, 2001.

The Department of Labor (DOL) has submitted the following public information collection requests (ICRs) to the Office of Management and Budget (OMB) for review and approval in accordance with the Paperwork Reduction Act of 1995 (Pub. L. 104–13, 44 U.S.C. Chapter 35). A copy of this ICR, with applicable supporting documentation, may be obtained by calling the Department of Labor. To obtain documentation contact Darrin King on (202) 693–4129 or E-Mail: *King-Darrin@dol.gov.*

Comments should be sent to Office of Information and Regulatory Affairs, Attn: OMB Desk Officer for OSHA, Office of Management and Budget, Room 10235, Washington, DC 20503 (202) 395–7316), within 30 days from the date of this publication in the **Federal Register.**

The OMB is particularly interested in comments which:

- Evaluate whether the proposed collection of information is unnecessary for the proper performance of the functions of the agency, including whether the information will have practical utility.
- Evaluate the accuracy of the agency's estimate of the burden of the proposed collection of information, including the validity of the methodology and assumptions used:
- Enhance the quality, utility, and clarity of the information to be collected; and
- Minimize the burden of the collection of information on those who are to respond, including through the use of appropriate automated, electronic, mechanical, or other technological collection techniques or other forms of information technology, e.g., permitting electronic submission of responses.

Type of Review: Existing collection without an OMB control number.

Agency: Occupational Safety and Health Administration (OSHA).

Title: Occupational Safety and Health State Plan Information.

OMB Number: 1218–ONEW.

Affected Public: State, Local, or Tribal Government.

Frequency: On occasion, Quarterly, and Annually.

Type of Response: Reporting.

Number of Respondents: 26.

Number of Annual Responses: 1,552.

Estimated Time Per Response: Varies from 61 hours to prepare and submit plan changes to 20 hours to prepare information for monitoring activities.

Total Burden Hours: 9,874.

Total Annualized Capital/Startup Costs: $0.

Total Annual Costs (operating/maintaining systems or purchasing services): $0.

Description: Section 18 of the Occupational Safety and Health Act encourages the States to assume responsibility for the development and enforcement of State occupational safety and health standards through the vehicle of an approved State Plan. States choosing to operate OSHA-approved State Plans must provide information to document that their program are, ''at least as effective'' as the Federal OSHA program.

Ira L. Mills,

Departmental Clearance Officer.

[FR Doc. 01–31814 Filed 12–26–01; 8:45 am]

BILLING CODE 4510–26–M

DEPARTMENT OF LABOR

Office of the Secretary

Submission for OMB Review; Comment Request

December 18, 2001.

The Department of Labor (DOL) has submitted the following public information collection requests (ICRs) to the Office of Management and Budget (OMB) for review and approval in accordance with the Paperwork Reduction Act of 1995 (Pub. L. 104–13, 44 U.S.C. Chapter 35). A copy of this ICR, with applicable supporting documentation, may be obtained by calling the Department of Labor. To obtain documentation, contact Darrin King on (202) 693–4129 or E–Mail: King-Darrin@dol.gov.

Comments should be sent to Office of Information and Regulatory Affairs, Attn: OMB Desk Officer for MSHA, Office of Management and Budget, Room 10235, Washington, DC 20503 ((202) 395–7316), within 30 days from the date of this publication in the **Federal Register**.

The OMB is particularly interested in comments which:

- Evaluate whether the proposed collection of information is necessary for the proper performance of the functions of the agency, including whether the information will have practical utility;
- Evaluate the accuracy of the agency's estimate of the burden of the proposed collection of information, including the validity of the methodology and assumptions used;
- Enhance the quality, utility, and clarity of the information to be collected; and
- Minimize the burden of the collection of information on those who are to respond, including through the use of appropriate automated, electronic, mechanical, or other technological collection techniques or other forms of information technology, e.g., permitting electronic submission of responses.

Type of Review: Revision of a currently approved collection.

Agency: Mine Safety and Health Administration (MSHA).

Title: Notification of Legal Identity - 30 CFR Section 41.10, 41.11, 41.12, and 41.20.

OMB Number: 1219–0008.

Affected Public: Business or other for-profit.

Frequency: On occasion.

Type of Response: Recordkeeping and Reporting.

Number of Respondents: 6,625.

Reporting requirement	Annual responses	Average time per response (hours)	Estimated burden hours
Form 2000–7 (paper/new)	830	.5	415
Form 2000–7 (electronic/new)	45	.33	15
Form 2000–7 (paper/revision)	4,150	.25	1,038
Form 2000–7 (electronic/revision)	1,600	.17	267
Total	6,625	.....	1,735

Total Annualized Capital/Startup Costs: $0.

Total Annual Costs (operating/maintaining systems or purchasing services: $1,693.

Description: Section 109(d) of the Federal Mine Safety and Health Act of 1977 (Pub. L. 91–173 as amended by Pub. L. 95–164), requires each operator of a coal or other mine to file with the Secretary of Labor, the name and address of such mine, the name and address of the person who controls or operates the mine, and any revisions in such names and addresses. Title 30 CFR part 41 implements this requirement and provides for the mandatory use of MSHA Form 2000–7, Legal Identify Report, for notifying MSHA of the legal identity of the mine operator.

Ira L. Mills,

Departmental Clearance Officer.

[FR Doc. 01–31815 Filed 12–26–01; 8:45 am]

BILLING CODE 4510–43–M

DEPARTMENT OF LABOR

Office of the Secretary

Submission for OMB Review; Comment Request

December 14, 2001.

The Department Labor (DOL) has submitted the following public information collection requests (ICRs) to the Office of Management and Budget (OMB) for review and approval in accordance with the Paperwork Reduction Act of 1995 (Pub. L. 104–13, 44 U.S.C. Chapter 35). A copy of each individual ICR, with applicable supporting documentation, may be obtained by calling the Department of Labor. To obtain documentation contact Marlene Howze at ((202) 219–8904 or Email *Howze-Marlene@dol.gov.*

Comments should be sent to Office of Information and Regulatory Affairs, Attn: OMB Desk Officer for ESA, Office of Management and Budget, Room 10235, Washington, DC 20503 ((202) 395–7316), within 30 days from the date of this publication in the **Federal Register.**

The OMB is particularly interested in comments which:

- Evaluate whether the proposed collection of information is necessary

for the proper performance of the functions of the agency, including whether the information will have practical utility;

• Evaluate the accuracy of the agency's estimate of the burden of the proposed collection of information, including the validity of the methodology and assumptions used;

• Enhance the quality, utility, and clarity of the information to be collected; and minimize the burden of the collection of information on those who are to respond, including through the use of appropriate automated, electronic, mechanical, or other technological collection techniques or other forms of information technology, e.g., permitting electronic submission of responses.

Type of Review: Extension of a currently approved collection.

Agency: Employment Standards Administration (ESA).

Title: Notice of Controversion of Right to Compensation.

OMB Number: 1215–0023.

Affected Public: Business or other for-profit.

Frequency: On Occasion.

Number of Respondents: 900.

Number of Annual Response: 18,900.

Estimated Time Per Response: 15 minutes.

Total Burden Hours: 4,725.

Total Annualized Capital/Startup Costs: $0.

Total Annual Costs (operating/maintaining systems or purchasing services): $7,418.25.

Descripton: The Office of Workers' Compensation Programs (OWCP) administers the Longshore and Harbor Workers' Compensation Act. This Act provides benefits to workers injured in maritime employment on the navigable waters of the United States or in an adjoining area customarily used by an employer in loading, unloading, repairing, or building a vessel. Pursuant to section 14(d) of the Act, and 20 CFR 702.251, if an employer controverts the right to compensation, he shall file with the district director in the affected compensation district on or before the fourteenth day after he has knowledge of the alleged injury or death, a notice, in accordance with a form prescribed by the Secretary, stating that the right to compensation is controverted.

Form LS–207 is used by insurance carriers and self-insured employers to controvert claims under the act. OWCP district offices use this information to determine the basis for not paying benefits in a case. It also informs the injured claimant of the reason(s) for not paying compensation benefits. If the information were not collected, our district offices and claimants would have no way of knowing the reason(s) for controverting the right to compensation.

Ira L. Mills,

Departmental Clearance Officer.

[FR Doc. 01–31816 Filed 12–26–01; 8:45 am]

BILLING CODE 4510–CF–M

DEPARTMENT OF LABOR

Office of the Secretary

Submission for OMB Review; Comment Request

December 17, 2001.

The Department of Labor (DOL) has submitted the following public information collection requests (ICRs) to the Office of Management and Budget (OMB) for review and approval in accordance with the Paperwork Reduction Act of 1995 (Pub. L. 104–13, 44 U.S.C. Chapter 35). A copy of this ICR, with applicable supporting documentation, may be obtained by calling the Department of Labor. To obtain documentation contact Darrin King on (202) 693–4129 or E-mail: *King-Darrin@dol.gov.*

Comments should be sent to Office of Information and Regulatory Affairs, Attn: OMB Desk Officer for ETA, Office of Management and Budget, Room 10235, Washington, DC 20503 ((202) 395–7316), within 30 days from the date of this publication in the **Federal Register**.

The OMB is particularly interested in comments which:

• Evaluate whether the proposed collection of information is necessary for the proper performance of the functions of the agency, including whether the information will have practical utility;

• Evaluate the accuracy of the agency's estimate of the burden of the proposed collection of information, including the validity of the methodology and assumptions used;

• Enhance the quality, utility, clarity of the information to be collected; and

• Minimize the burden of the collection of information on those who are to respond, including through the use of appropriate automated, electronic, mechanical, or other technological collection techniques or other forms of information technology, e.g., permitting electronic submission of responses.

Type of Review: New collection.

Agency: Employment and Training Administration (ETA).

Title: Workforce Flexibility (Work-Flex) Program.

OMB Number: 1205–ONEW.

Affected Public: State, Local, or Tribal Government.

Frequency: Annually and Quarterly.

Type of Response: Reporting.

Number of Respondents: 5.

Number of Annual Responses: 25.

Estimated Time Per Response: 160 hours to prepare and submit a Work-Flex Plan and 8 hours to prepare and submit quarterly reports.

Total Burden Hours: 960.

Total Annualized Capital/Startup Costs: $0.

Total Annual Costs (operating/maintaining systems or purchasing services): $0.

Description: In accordance with requirements specified in section 192 of the Workforce Investment Act (the Act) and 20 CFR 661.420 et seq, States may apply for a 5-year Work-Flex waiver authority to implement reforms to their workforce investment systems in exchange for program improvement. The Act provides that the Secretary may only grant Work-Flex waiver authority in consideration of a Work-Flex Plan submitted by a State. States granted Work-Flex authority are also required to submit quarterly reports that summarize waiver activities in the State.

Ira L. Mills,

Departmental Clearance Officer.

[FR Doc. 01–31817 Filed 12–26–01; 8:45 am]

BILLING CODE 4510–30–M

DEPARTMENT OF LABOR

Employment and Training Administration Apprenticeship Training, Employer and Labor Services; Proposed Collection; Labor Standards for the Registration of Apprenticeship Programs; Comment Request

ACTION: Notice.

SUMMARY: The Department of Labor, as part of its continuing effort to reduce paperwork and respondent burden conducts a preclearance consultation program to provide the general public and Federal agencies with an opportunity to comment on proposed and/or continuing collections of information in accordance with the Paperwork Reduction Act of 1995 (PRA95) [44 U.S.C. 3506(c)(2)(A)]. This program helps to ensure that requested data can be provided in the desired format, reporting burden (time and financial resources) is minimized, collection instruments are clearly understood, and the impact of collection requirements on respondents can be properly assessed. Currently, the

Employment and Training Administration is soliciting comments concerning the proposed revision of the collection of the registered apprenticeship program under Title 29 CFR part 29 (Labor Standards for the Registration of Apprenticeship Programs).

A copy of the proposed information collection request (ICR) can be obtained by contacting the office listed below in the addressee section of this notice.

DATES: Written comments must be submitted to the office listed in the addressee's section below on or before February 25, 2002.

ADDRESSES: Anthony Swoope, Administrator, Office of Apprenticeship Training, Employer and Labor Services, 200 Constitution Ave., NW., Room N–4671, Washington, DC 20210; Telephone number: (202) 693–2796 (this is not a toll-free number); E-mail Internet address: *aswoope@doleta.gov;* and Fax number (202) 693–2761.

SUPPLEMENTARY INFORMATION:

I. Background

The National Apprenticeship Act of 1937 authorizes and directs the Secretary of Labor ''to formulate and promote the furtherance of labor standards necessary to safeguard the welfare of apprentices, to extend the application of such standards by encouraging the inclusion thereof in contracts of apprenticeship, to bring together employers and labor for the formulation of programs of apprenticeship, to cooperate with State agencies engaged in the formulation and promotion of standards of apprenticeship, and to cooperate with the Secretary of Education ***'' (29 U.S.C. 50). Section 50a of the Act authorizes the Secretary of Labor to ''publish information relating to existing and proposed labor standards of apprenticeship,'' and to ''appoint national advisory committees * * *'' (29 U.S.C. 50a).

Title 29 CFR part 29 sets forth labor standards to safeguard the welfare of apprentices, and to extend the application of such standards by prescribing policies and procedures concerning registration, for certain Federal purposes, of acceptable apprenticeship programs with the U.S. Department of labor, Employment and Training Administration, Office of Apprenticeship Training, Employer and Labor Services (formerly known as the Bureau of Apprenticeship and Training). These labor standards, policies and procedures cover registration, cancellation, and deregistration of apprenticeship programs and the apprenticeship agreements; the recognition of a State agency as the appropriate agency for registering local apprenticeship programs for certain Federal purposes; and matters relating thereto.

II. Review Focus

The Department of Labor is particularly interested in comments which:

- Evaluate whether the proposed collection of information is necessary for the proper performance of the functions of the agency, including whether the information will have practical utility;
- Evaluate the accuracy of the agency's estimate of the burden of the proposed collection of information, including the validity of the methodology and assumptions used;
- Enhance the quality, utility, and clarify of the information to be collected; and
- Minimize the burden of the collection of information on those who are to respond, including through the use of appropriate automated, electronic, mechanical, or other technological collection techniques or other forms of information technology, e.g., permitting electronic submissions of responses.

III. Current Actions

Recordkeeping and data collection activities regarding registered apprenticeship are by-products of the registration system. Organizations which apply for apprenticeship sponsorship enter into an agreement with the Federal Government or cognizant State government to operate their proposed programs consistent with 29 CFR part 29. Apprenticeship sponsors are not required to file reports regarding their apprentices other than individual registration and update information as an apprentice moves through their program. This revision request includes revisions to the Apprenticeship Agreement Form (ETA 671) as follows:

1. Current format (Apprenticeship Agreement ETA Form 671) Revised February 2000) of sponsor and apprentice inverted. To facilitate and increase efficiency when the apprentice registers and to align the form with current processes and procedures in our program.

2. Revisions on race and ethnicity. To provide uniformity and comparability in collecting this data as mandated by the Office of Management and Budget (OMB) Notice, Standards for the Classification of Federal Data on Race and Ethnicity, in the **Federal Register** (October 30, 1997).

3. Career linkage or Direct Entry. To comply with the U.S. Department of Labor/Employment and Training Administration (USDOL/ETA) and the Office of Management and Budget (OMB). The current Item 16., Apprenticeship School Linkage, has been enhanced to facilitate the tracking of participants from additional USDOL/ETA programs who continue with higher-skills occupational training or direct entry participants from technical training programs that have been reviewed and approved by the sponsor.

4. Apprentice entry hourly wage. To track wage progression more accurately and for Government Performance Results Act (GPRA) purposes.

5. Additional instructions on reverse side of form. To provide instructions on those data elements that are not self-explanatory as requested previously by OMB.

These proposed changes will pose minimal burden on the respondents. The change in burden is due to an increase in the number of apprentice actions from that of the previous PRA submission.

Type of Review: Revision.

Agency: Employment and Training Administration.

Title: Title 29 CFR part 29, Labor Standards for the Registration of Apprenticeship Programs.

OMB Number: 1205–0223 for 29 CFR part 29.

Agency Number: ETA Form 671.

Recordkeeping: Apprenticeship sponsors are required to keep accurate records on recruitment, selection of the applicant and/or apprentice and the employment and training activities related to the apprentice and the qualifications of each applicant/apprentice pertaining to determination of compliance with the regulation. Records must be retained, where appropriate, regarding affirmative action plans and evidence that qualification standards have been validated. State Apprenticeship Councils are also obligated to keep adequate records pertaining to determination of compliance with these regulations. All of the above records are required to be maintained for five years. If this information was not required, there would be no documentation that the apprenticeship programs were being operated in a nondiscriminatory manner. Many apprenticeship programs are 4 years or more in duration; therefore, it is important to maintain the records for at least 5 years.

Affected Public: Apprentices, Sponsors, State Apprenticeship

Councils or Agencies, Tribal Government.

ETA Form 671

Total Respondents: 238,929.
Frequency: 1-time basis.
Total Responses: 238,929.

Average Time per Response: See Chart.

Estimated Total Burden Hours: 47,556.

SUMMARY OF BURDEN FOR 29 CFR PART 29

Sec.	Total respondents	Frequency	Total responses	Average time per responses	Burden hours
29.3	127,421	1-time basis	127,421	¼ hr./app.	31,855
29.6	108,124	1-time basis	108,124	1/12 hr./app.	9,010
29.5	1,674	1-time basis	1,674	2 hrs./spon.	3,348
	1,640	1-time basis	1,640	2 hrs./SAC	3,280
29.7	40	1-time basis	40	1/12 hr./spon.	3
29.12	(30)	1-time basis	(30)	0	0
29.12	(accomplished in 1977; no new state agency expected in 2002)				
29.12	30	1-time basis	30	2 hrs. SAC	60
29.13	0	0	0	0	0
Totals	238,929		238,929		47,556

Totals Burden Cost (capital/startup): 0.

Total Burden Cost (operating/maintaining): 0.

Comments submitted in response to this comment request will be summarized and/or included in the request for office of Management and Budge approval of the information collection request; they will also become a matter of public record.

Dated: December 20, 2001.

Anthony Swoope,

Administrator, Office of Apprenticeship Training, Employer and Labor Services.

[FR Doc. 01–31777 Filed 12–26–01; 8:45 am]

BILLING CODE 4510–30–P

DEPARTMENT OF LABOR

Occupational Safety and Health Administration

Settlement Agreement: Occupational Injury and Illness Recording and Reporting

AGENCY: Occupational Safety and Health Administration (OSHA), Department of Labor.

ACTION: Notice of settlement agreement.

SUMMARY: The Occupational Safety and Health Administration (OSHA) has entered into a settlement agreement with the National Association of Manufacturers (NAM) to resolve NAM's legal challenge to OSHA's revised regulations in 29 CFR part 1904, Recording and Reporting Occupational Injuries and Illnesses. As part of the agreement, OSHA agreed to publish a copy of the OSHA–NAM settlement agreement in the **Federal Register** within 30 days.

DATES: The settlement agreement was completed on November 16, 2001.

FOR FURTHER INFORMATION CONTACT: Jim Maddux, Occupational Safety and Health Administration, U.S. Department of Labor, Directorate of Safety Standards Programs, Room N–3609, 200 Constitution Avenue, NW., Washington, DC 20210. Telephone (202) 693–2222.

SUPPLEMENTARY INFORMATION:

Background

On January 19, 2001, (66 FR 5916), OSHA published a final rule, revising its Occupational Injury and Illness Recording and Reporting Requirements in 29 CFR Part 1904. The Agency subsequently published an amendment to the final rule on October 12, 2001 (66 FR 35113). After the final rule was published in January, NAM filed a legal challenge to the final rule in the United States District Court for the District of Columbia. On November 16, 2001, OSHA and NAM entered into a settlement agreement to resolve NAM's legal challenge. The parties entered into a revised settlement agreement on November 29, 2001. As part of this revised agreement, OSHA agreed to publish a copy of the revised settlement agreement in the **Federal Register** within 30 days.

Accordingly, the following section of this notice contains the text of the OSHA–NAM revised settlement agreement:

Settlement Agreement

United States District Court for the District of Columbia

National Association of Manufacturers, Plaintiff, v. Elaine L. Chao, Secretary, U.S. Department of Labor, and John Henshaw, Assistant Secretary of Labor for Occupational Safety and Health, Defendants.

[Case No: 1:01CV00575 (GK)]

Revised Settlement Agreement

The Federal Defendants and the National Association of Manufacturers, by and through counsel, hereby agree as follows:

1. On January 19, 2001, the Occupational Safety and Health Administration issued a Final Rule on Occupational Injury and Illness Recording and Reporting Requirements, 29 CFR parts 1904 and 1952 (the Final Rule). 66 FR 5916–6135 (January 19, 2001). On March 23, 2001, the National Association of Manufacturers filed a First Amended Complaint in this Court challenging portions of the Final Rule. The Federal Defendants and the National Association of Manufacturers have settled their differences as provided herein.

2. Secretary of Labor will include the following language in the initial Compliance Directive to be issued on the Final Rule.

A. During the initial period the new recordkeeping rule is in effect, OSHA compliance officers conducting inspections will focus on assisting employers to comply with the new rule rather than on enforcement. OSHA will not issue citations for violations of the recordkeeping rule during the first 120 days after January 1, 2002, provided the employer is attempting in good faith to meet its recordkeeping obligation and agrees to make corrections necessary to bring the records into compliance.

B. Section 1904.5(a) states that ''[the employer] must consider an injury or illness to be work-related if an event or exposure in the work environment either caused or contributed to resulting condition or significantly aggravated a pre-existing condition. Work-relatedness is presumed for injuries and

illnesses resulting from events or exposures occurring in the work environment * * *'' Under this language, a case is presumed work-related if, and only if, an event or exposure in the work environment is a discernable cause of the injury or illness or of a significant aggravation to pre-existing condition. The work event or exposure need only be one of the discernable causes; it need not be the sole or predominant cause.

Section 1904.5(b)(2) states that a case is not recordable if it ''involves signs or symptoms that surface at work but result solely from a non-work-related event or exposure that occurs outside the work environment.'' This language is intended as a restatement of the principle expressed in 1904.5(a), described above. Regardless of where signs or symptoms surface, a case is recordable only if a work event or exposure is a discernable cause of the injury or illness or of a significant aggravation to a pre-existing condition.

Section 1904.5(b)(3) states that if it is not obvious whether the precipitating event or exposure occurred in the work environment or elsewhere, the employer ''must evaluate the employee's work duties and environment to decide whether or not one or more events or exposures in the work environment caused or contributed to the resulting condition or significantly aggravated a pre-existing condition.'' This means that the employer must make a determination whether it is more likely than not that work events or exposures were a cause of the injury or illness, or a significant aggravation to a pre-existing condition. If the employer decides the case is not work-related, and OSHA subsequently issues a citation for failure to record, the Government would have the burden of proving that the injury or illness was work-related.

C. A case is not recordable under 1904.7(b)(4) as a restricted work case if the employee experiences minor musculoskeletal discomfort, a health care professional determines that the employee is fully able to perform all of his or her routine job functions, and the employer assigns a work restriction to that employee for the purpose of preventing a more serious condition from developing.

D. *Question.* Is the employer subject to a citation for violating section 1904.7(b)(4)(viii) if an employee fails to follow a recommended work restriction?

Answer: Section 1904.7(b)(4)(viii) deals with the recordability of cases in which a physician or other health care professional has recommended a work restriction. The section also states that the employer ''should ensure that the employee complies with [the recommended] restriction.'' This language is purely advisory and does not impose an enforceable duty upon employers to ensure that employees comply with the recommended restriction. [**Note:** in the absence of conflicting opinions from two or more health care professionals, the employer ordinarily must record the case if a health professional recommends a work restriction involving the employee's routine job functions].

E. *Question.* Does an employee report of an injury or illness establish the existence of the injury or illness for recordkeeping purposes?

Answer: No. In determining whether a case is recordable, the employer must first decide whether an injury or illness, as defined by the rule, has occurred. If the employer is uncertain about whether an injury or illness has occurred, the employer may refer the employee to a physician or other health care professional for evaluation and may consider the health care professional's opinion in determining whether an injury or illness exists. [**Note:** if a physician or other licensed health care professional diagnoses a significant injury or illness within the meaning of section 1904.7(b)(7) and the employer determines that the case is work-related, the case must be recorded.]

F. *Question.* If an employee is exposed to chlorine or some other substance at work and oxygen is administered as a purely precautionary measure, is the case recordable?

Answer: If oxygen is administered as a purely precautionary measure to an employee who does not exhibit any symptoms of an injury or illness, the case is not recordable. If an employee exposed to a substance at work exhibits symptoms of an injury or illness, the administration of oxygen makes the case recordable.

3. Within 3 business days following issuance of the Compliance Directive containing the language in Paragraph 2 of this agreement, the National Association of Manufacturers (NAM) will file a notice of dismissal of its lawsuit under Fed. R. Civ. P. 41(a)(1)(ii). The notice of dismissal shall state that dismissal is with prejudice, except only that NAM may re-file its complaint if a court of competent jurisdiction determines that any of the provisions of this agreement or of the Department of Labor's October 12, 2001 **Federal Register** Notice (66 FF 52031) are invalid or if any of the provisions of this agreement are withdrawn or revised in a manner inconsistent with the language in this agreement. The Federal Defendants shall not object to the timeliness of such a complaint by NAM on statute of limitations, laches, or other grounds, provided that the complaint is filed within 90 days of the occurrence of an event listed in the preceding sentence. Nothing contained herein shall be construed as affecting Federal Defendants' right to modify or interpret its regulations in the future.

4. The Federal Defendants and the National Association of Manufacturers agree to bear their own fees and expenses incurred at any stage in this litigation.

5. The Federal Defendants agree to publish a copy of this revised settlement agreement, in lieu of the settlement agreement signed on November 16, in the **Federal Register** within thirty days of its effective date.

6. This revised settlement agreement is effective on November 29, 2001.

Respectfully submitted,
Of Counsel:
Jan S. Amundson,
General Counsel,
Quentin Riegel,
Deputy General Counsel, National Association of Manufacturers, 1331 Pennsylvania Avenue, NW., Washington, DC 20004.
Baruch A. Fellner,
D.C. Bar No. 061630,
Jason C. Schwartz,
D.C. Bar No. 465837, Gibson, Dunn & Crutcher, LLP, 1050 Connecticut Avenue, NW., Washington, DC 20036. Counsel for Plaintiff National Association of Manufacturers.
Roscoe C. Howard, Jr.,
D.C. Bar No. 246470, United States Attorney.
Mark E. Nagle,
D.C. Bar. No. 416364, Assistant United States Attorney.
Brian J. Sonfield,
D.C. Bar No. 449098, Assistant United States Attorney, Judiciary Center Bldg. Civil Division, 555 Fourth Street, NW., Washington, D.C. 20001, (202) 514–7143. Counsel for Defendants Elaine L. Chao and John Henshaw.

Authority

This document was prepared under the direction of John L. Henshaw, Assistant Secretary for Occupational Safety and Health, U.S. Department of Labor, 200 Constitution Avenue, NW., Washington, DC 20210. It is issued pursuant to section 8 of the Occupational Safety and Health Act of 1970 (29 U.S.C. 657).

Signed at Washington, D.C., this 20th day of December, 2001.

John L. Henshaw,
Assistant Secretary of Labor.

[FR Doc. 01–31808 Filed 12–26–01; 8:45 am]
BILLING CODE 4510–26–M

NATIONAL SCIENCE FOUNDATION

Emergency Clearance; Public Information Collection Requirements Submitted to the Office of Management and Budget; Notice

AGENCY: National Science Foundation.

ACTION: Emergency clearance: Public information collection requirements submitted to the Office of Management and Budget (OMB).

SUMMARY: The National Science Foundation (NSF) is announcing plans to request reinstatement and approval of this collection. In accordance with the requirement of Section 3506(c)(2)(A) of the Paperwork Reduction Act of 1995 (Pub. L. 104–13), we are providing an opportunity for public comment on this action.

DATES: Interested persons are invited to send comments regarding the burden or any other aspect of these collections of information requirements. However, as noted below, comments on these information collection and record keeping requirements must be received by the designees referenced below by January 18, 2002.

ADDRESSES: Written comments regarding the information collection and requests for copies of the proposed information collection request should be addressed to Suzanne Plimpton, Reports Clearance Officer, National Science Foundation, 4201 Wilson Blvd., Rm. 295, Arlington, VA 22230, or by e-mail to *splimpto@nsf.gov,* and Office of Information and Regulatory Affairs, Office of Management and Budget, Room 10235, New Executive Office Building, Washington, D.C. 20503. Attn: Lauren Wittenberg, NSF Desk Officer.

Comments: Written comments are invited on (a) whether the proposed collection of information is necessary for the proper performance of the functions of the Agency, including whether the information shall have practical utility; (b) the accuracy of the Agency's estimate of the burden of the proposed collection of information; (c) ways to enhance the quality, utility, and clarity of the information of respondents, including through the use of automated collection techniques or other forms of information technology; or (d) ways to minimize the burden of the collection of information on those who are to respond, including through the use of appropriate automated, electronic, mechanical, or other technological collection techniques or other forms of information technology.

We are, however, requesting an emergency review of the information collection referenced below. In compliance with the requirement of section 3506(c)(2)(A) of the Paperwork Reduction Act of 1995, we have submitted to the Office of Management and Budget (OMB) the following requirements for emergency review. We are requesting an emergency review because the collection of this information is needed before the expiration of the normal time limits under OMB's regulations at 5 CFR part 1320.

FOR FURTHER INFORMATION CONTACT: Suzanne H. Plimpton, Reports Clearance Officer, National Science Foundation, 4201 Wilson Boulevard, Suite 295, Arlington, Virginia 22230; telephone (703) 292–7556; or send email to splimpto@nsf.gov. Individuals who use a telecommunications device for the deaf (TDD) may call the Federal Information Relay Service (FIRS) at 1–800–877–8339 between 8 a.m. and 8 p.m., Eastern time, Monday through Friday.

SUPPLEMENTARY INFORMATION:

Title: Survey of Principal Investigator and Institutional Views on NSF Award Size and Duration

OMB Approval Number: 3145–NEW.
Expiration Date: Not applicable.
Abstract: The National Science Foundation (NSF) plans to conduct two surveys to obtain the views of the U.S. academic research community on NSF award size and duration issues. The surveys will be conducted with principal investigators receiving NSF grants in FY 2001 as well as representatives from the principal investigators' respective institutions. The data collected will provide NSF with information about NSF's impact on the scientific and educational communities and information to assist future planning.
Respondents: Individuals.
Number of Respondents: 6,330.
Burden on the Public: 1,760 hours.

Dated: December 14, 2001.

Suzanne H. Plimpton,

NSF Reports Clearance Officer.

[FR Doc. 01–31772 Filed 12–26–01; 8:45 am]

BILLING CODE 7555–01–M

NUCLEAR REGULATORY COMMISSION

[Docket No. 50–368]

Entergy Operations, Inc.; Notice of Consideration of Issuance of Amendment to Facility Operating License and Opportunity for a Hearing

The U.S. Nuclear Regulatory Commission (the Commission) is considering issuance of an amendment to Facility Operating License No. NPF–6, issued to Entergy Operations, Inc. (Entergy, or the licensee), for operation of Arkansas Nuclear One, Unit 2 (ANO–2) located in Pope County, Arkansas.

The proposed amendment would allow an increase in the maximum authorized reactor core power level from 2815 megawatts thermal (MWt) to 3026 MWt, which represents a power increase of about 7.5 percent and is considered to be an extended power uprate. The proposed amendment would change the operating license and certain technical specifications (TSs) to provide for implementing uprated power operation. Also, operation at the uprated power requested by the proposed amendment would result in increases in dose consequences for certain postulated accidents considered in the accident analyses in the Safety Analysis Report; however, the doses would remain within the regulatory limits. In addition, although unrelated to the proposed power uprate, the proposed amendment would clarify portions of the control element assembly TSs.

Before issuance of the proposed license amendment, the Commission will have made findings required by the Atomic Energy Act of 1954, as amended (the Act), and the Commission's regulations.

By January 28, 2002, the licensee may file a request for a hearing with respect to issuance of the amendment to the subject facility operating license, and any person whose interest may be affected by this proceeding and who wishes to participate as a party in the proceeding must file a written request for a hearing and a petition for leave to intervene. Requests for a hearing and a petition for leave to intervene shall be filed in accordance with the Commission's ''Rules of Practice for Domestic Licensing Proceedings'' in 10 CFR Part 2. Interested persons should consult a current copy of 10 CFR 2.714, which is available at the Commission's Public Document Room, located at One White Flint North, 11555 Rockville Pike (first floor), Rockville, Maryland or electronically on the Internet at the NRC Web site *http://www.nrc.gov/reading-rm/doc-collections/regs* and click on the hyper-link to the *Government Printing Office.* If there are problems in accessing the document, contact the Public Document Room Reference staff at 1–800–397–4209, 301–415–4737, or by e-mail to *pdr@nrc.gov.* If a request for a hearing or petition for leave to intervene is filed by the above date, the Commission or an Atomic Safety and Licensing Board, designated by the

Commission or by the Chairman of the Atomic Safety and Licensing Board Panel will rule on the request and/or petition; and the Secretary or the designated Atomic Safety and Licensing Board will issue a notice of hearing or an appropriate order.

As required by 10 CFR 2.714, a petition for leave to intervene shall set forth with particularity the interest of the petitioner in the proceeding, and how that interest may be affected by the results of the proceeding. The petition must specifically explain the reasons why intervention should be permitted with particular reference to the following factors: (1) the nature of the petitioner's right under the Act to be made a party to the proceeding; (2) the nature and extent of the petitioner's property, financial, or other interest in the proceeding; and (3) the possible effect of any order that may be entered in the proceeding on the petitioner's interest. The petition must also identify the specific aspect(s) of the subject matter of the proceeding as to which petitioner wishes to intervene. Any person who has filed a petition for leave to intervene or who has been admitted as a party may amend the petition without requesting leave of the Board up to 15 days prior to the first prehearing conference scheduled in the proceeding, but such an amended petition must satisfy the specificity requirements described above.

Not later than 15 days prior to the first prehearing conference scheduled in the proceeding, a petitioner shall file a supplement to the petition to intervene that must include a list of the contentions that the petitioner seeks to have litigated in the hearing. Each contention must consist of a specific statement of the issue of law or fact to be raised or controverted. In addition, the petitioner shall provide a brief explanation of the bases of each contention and a concise statement of the alleged facts or expert opinion that support the contention and on which the petitioner intends to rely in proving the contention at the hearing. The petitioner must also provide references to those specific sources and documents of which the petitioner is aware and on which the petitioner intends to rely to establish those facts or expert opinion. The petitioner must provide sufficient information to show that a genuine dispute exists with the applicant on a material issue of law or fact. Contentions shall be limited to matters within the scope of the amendment under consideration. The contention must be one that, if proven, would entitle the petitioner to relief. A petitioner who fails to file such a supplement that satisfies these requirements with respect to at least one contention will not be permitted to participate as a party.

Those permitted to intervene become parties to the proceeding, subject to any limitations in the order granting leave to intervene, and have the opportunity to participate fully in the conduct of the hearing, including the opportunity to present evidence and cross-examine witnesses.

A request for a hearing and petition for leave to intervene must be filed with the Secretary of the Commission, U.S. Nuclear Regulatory Commission, Washington, DC 20555–0001, Attention: Rulemakings and Adjudications Staff, or may be delivered to the Commission's Public Document Room, located at One White Flint North, 11555 Rockville Pike (first floor), Rockville, Maryland, by the above date. A copy of the request for a hearing and the petition should also be sent to the Office of the General Counsel, U.S. Nuclear Regulatory Commission, Washington, DC 20555–0001, and to Nicholas S. Reynolds, Esquire, Winston and Strawn, 1400 L Street, NW., Washington, DC 20005–3502, attorney for the licensee.

Nontimely filings of petitions for leave to intervene, amended petitions, supplemental petitions and/or requests for a hearing will not be entertained absent a determination by the Commission, the presiding officer, or the Atomic Safety and Licensing Board that the petition and/or request should be granted based upon a balancing of the factors specified in 10 CFR 2.714(a)(1)(i)–(v) and 2.714(d).

If a request for a hearing is received, the Commission's staff may issue the amendment after it completes its technical review and prior to the completion of any required hearing if it publishes a further notice for public comment of its proposed finding of no significant hazards consideration in accordance with 10 CFR 50.91 and 50.92.

For further details with respect to this action, see the application for amendment dated December 19, 2000, as supplemented by letters dated May 30, June 20, 26 (two letters), and 28, July 3 and 24 (two letters), August 7, 13, 21, 23, and 30, September 14, October 1, 12 (two letters), 17, 30 (two letters), and 31, November 9, 16 (three letters), and 17, and December 5, 6 (two letters), and 10, 2001, which are available for public inspection at the Commission's Public Document Room, located at One White Flint North, 11555 Rockville Pike (first floor), Rockville, Maryland. Publicly available records will be accessible electronically from the Agencywide Documents Access and Management Systems (ADAMS) Public Electronic Reading Room on the Internet at the NRC Web site, *http://www.nrc.gov/reading-rm/adams.html.* Persons who do not have access to ADAMS or who encounter problems in accessing the documents located in ADAMS, should contact the NRC Public Document Room Reference staff by telephone at 1–800–397–4209, 301–415–4737 or by e-mail to *pdr@nrc.gov.*

Dated at Rockville, Maryland, this 14th day of December, 2001.

For the Nuclear Regulatory Commission.

Thomas W. Alexion,

Project Manager, Section 1, Project Directorate IV, Division of Licensing Project Management, Office of Nuclear Reactor Regulation.

[FR Doc. 01–31806 Filed 12–26–01; 8:45 am]

BILLING CODE 7590–01–P

NUCLEAR REGULATORY COMMISSION

[Docket Nos. 50–335 and 50–389]

Florida Power and Light Company, St. Lucie Nuclear Plant, Units 1 and 2; Notice of Receipt of Application for Renewal of Facility Operating License Nos. DPR–67 and NPF–16 for an Additional 20-Year Period

The U.S. Nuclear Regulatory Commission has received the application from Florida Power and Light Company, dated November 29, 2001, filed pursuant to Section 104b and 103 of the Atomic Energy Act of 1954, as amended, and 10 CFR part 54 for renewal of Operating License Nos. DPR–67 and NPF–16, which authorize the applicant to operate St. Lucie Nuclear Plant, Units 1 and 2. The St. Lucie nuclear facility is located about 7 miles southeast of the city of Fort Pierce, Florida, in St. Lucie County. The current operating licenses for St. Lucie Units 1 and 2, expire on March 1, 2016, and April 6, 2023, respectively. For St. Lucie Unit 2, Florida Power and Light requested an exemption to the schedular requirements of 10 CFR 54.17(c) by letter dated October 30, 2000. By letter dated February 27, 2001, the NRC approved the requested schedular exemption. The St. Lucie Units 1 and 2 reactors are Combustion Engineering designed pressurized-water reactors. The acceptability of the tendered application for docketing and other matters, including an opportunity to request a hearing will be the subject of a subsequent **Federal Register** notice.

A copy of the application is available for public inspection at the

Commission's Public Document Room, located at One White Flint North, 11555 Rockville Pike (first floor), Rockville, Maryland, or on the NRC Web site from the NRC's Agencywide Documents Access and Management System (ADAMS). The ADAMS Public Electronic Reading Room is accessible from the NRC Web site at *http://www.nrc.gov/reading-rm/adams.html.* If you do not have access to ADAMS or if there are problems in accessing the documents located in ADAMS, contact the NRC Public Document Room (PDR) Reference staff at 1–800–397–4209, 301–415–4737 or by email to *pdr@nrc.gov.*

The staff has verified that a copy of the license renewal application for the St. Lucie Nuclear Plant has been provided to the Indian River Community College library.

Dated at Rockville, Maryland, the 19th day of December, 2001.

For the Nuclear Regulatory Commission

Stephen T. Hoffman,

Acting Chief, License Renewal and Standardization Branch, Division of Regulatory Improvement Programs, Office of Nuclear Reactor Regulation.

[FR Doc. 01–31807 Filed 12–26–01; 8:45 am]

BILLING CODE 7590–01–P

NUCLEAR REGULATORY COMMISSION

[Docket 72–20]

U.S. Department of Energy Three Mile Island 2 Independent Spent Fuel Storage Installation, Materials License No. SNM–2508; Issuance of Environmental Assessment and Finding of No Significant Impact

The U.S. Nuclear Regulatory Commission (NRC or Commission) is considering issuance of an exemption, pursuant to 10 CFR 72.7, from a specific provision of 10 CFR 72.32(a)(12) to the U.S. Department of Energy (DOE) for the Three Mile Island 2 (TMI–2) Independent Spent Fuel Storage Installation (ISFSI) located in Idaho. The requested exemption would allow DOE to deviate from the requirement of 10 CFR 72.32(a)(12) for a biennial onsite emergency preparedness (EP) exercise. The requested exemption would allow the onsite exercise to be performed prior to June 30, 2002, instead of prior to December 31, 2001, which is the expiration of the biennial period for the conduct of an EP exercise at the TMI–2 ISFSI.

Environmental Assessment (EA)

Identification of Proposed Action: By letter dated November 21, 2001, DOE requested an extension of time in which to perform the next onsite biennial EP exercise required by 10 CFR 72.32(a)(12)(i). Staff has considered an exemption from this provision of 10 CFR 72.32(a)(12). DOE holds Materials License No. SNM–2508, issued March 19, 1999, for operation of the TMI–2 ISFSI located within the Idaho National Engineering and Environmental Laboratory (INEEL).

On March 16, 1999, DOE performed the first onsite EP exercise for the TMI–2 ISFSI. The requirement of 10 CFR 72.32(a)(12) is that onsite EP exercises be conducted biennially, that is every other calendar year. With the last performance of the TMI–2 ISFSI EP exercise on March 16, 1999, the next required performance of the exercise would be prior to December 31, 2001. DOE had scheduled its next biennial exercise for September 12, 2001. However, due to the tragic events of September 11, 2001, the exercise was postponed.

By exempting DOE from the provision of 10 CFR 72.32(a)(12) requiring a biennial exercise, DOE will be authorized to delay performance of the biennial onsite EP exercise at the TMI–2 ISFSI until June 30, 2002. The proposed action before the Commission is whether to grant this exemption under 10 CFR 72.7.

Need for the Proposed Action: Conduct of an exercise of an ISFSI's onsite emergency plan every 2 years is required by 10 CFR 72.32(a)(12). The licensee had initially planned to conduct an exercise of its onsite emergency plan on September 12, 2001, within the required 2-year interval. However, due to heavy demands on INEEL security and emergency preparedness resources pursuant to the tragic events of September 11, 2001, and the prospect of continued terrorist threats against the United States, and the need for those resources to remain focused on assessing the security and emergency preparedness/response posture at INEEL, the licensee decided to postpone the exercise.

Environmental Impacts of the Proposed Action: The proposed action involves an administrative activity (a scheduler change in conducting an exercise) unrelated to ISFSI operations.

The last EP exercise was conducted on March 16, 1999. NRC reviews and inspections since the 1999 exercise have not identified a decline in the effectiveness of DOE's emergency response capability. The postponement should have no impact on the effectiveness of DOE's emergency response capability. Moreover, as DOE points out, the re-scheduled exercise may be of more value after any additional security and/or emergency response measures are put into effect in light of the tragic events of September 11, 2001.

The proposed action will not increase the probability or consequences of accidents, no changes are being made in the amounts or types of any effluents that may be released offsite, and there is no increase in occupational or public radiation exposure. Therefore, there are no significant radiological environmental impacts associated with the proposed action.

With regard to potential non-radiological impacts, the proposed action does not affect non-radiological effluents and has no other environmental impact. Therefore, there are no significant non-radiological environmental impacts associated with the proposed action.

Accordingly, the Commission concludes that there are no significant environmental impacts associated with the proposed action.

Alternative to the Proposed Action: As an alternative to the proposed action, the staff considered denial of the proposed action (*i.e.,* the ''no-action'' alternative). Denial of the application would result in no change in current environmental impacts. The environmental impacts of the proposed action and the alternative action are the same.

Agencies and Persons Consulted: On December 19, 2001, Mr. Doug Walker and Ms. Kathleen Trever of the State of Idaho, INEEL Oversight Program, were contacted about the Environmental Assessment for the proposed action. The state officials had no comments related to the appropriateness of issuance of the exemption, or the Staff's basis for issuance of the exemption. The state officials discussed several comments related to additional information in DOE's letter request dated November 21, 2001, that were unrelated to the Staff's basis for issuance of the exemption. The state officials mentioned they will follow up on those concerns with a letter to DOE, and will provide a copy of that letter to the NRC. However, the state officials agreed that issuance of the exemption need not be delayed due to the unrelated concerns.

Finding of No Significant Impact

On the basis of the environmental assessment, the Commission concludes that the proposed action will not have a significant effect on the quality of the human environment. Accordingly, the Commission has determined not to prepare an environmental impact statement for the proposed action.

The licensee's letter was docketed under 10 CFR part 72, Docket 72–20. For further details with respect to this action, see DOE's request dated November 21, 2001. The NRC maintains an Agencywide Documents Access and Management System (ADAMS), which provides text and image files of NRC's public documents. These documents may be accessed through the NRC's Public Electronic Reading Room on the Internet at *http://www.nrc.gov/NRC/ADAMS/index.html.* If you do not have access to ADAMS or if there are problems in accessing the documents located in ADAMS, contact the NRC Public Document Room (PDR) Reference staff at 1–800–397–4209, 301–415–4737 or by email to *pdr@nrc.gov.*

Dated at Rockville, Maryland, this 19th day of December, 2001.

Charles L. Miller,

Acting Director, Spent Fuel Project Office, Office of Nuclear Material Safety and Safeguards.

[FR Doc. 01–31804 Filed 12–26–01; 8:45 am]

BILLING CODE 7590–01–P

NUCLEAR REGULATORY COMMISSION

[Docket Nos. 50–10, 50–237 and 50–249]

Exelon Generation Company, LLC, Dresden Nuclear Power Station, Units 1, 2, and 3; Environmental Assessment and Finding of No Significant Impact

The U.S. Nuclear Regulatory Commission (NRC) is considering issuance of an exemption from Title 10 of the Code of Federal Regulations (10 CFR) Part 50, Appendix E, Item IV.F.2.c to Facility Operating License Nos. DPR–2, DPR–19 and DPR–25, issued to Exelon Generation Company, LLC (the licensee), for operation of the Dresden Nuclear Power Station, Units 1, 2 and 3 (DNPS), located in Grundy County, Illinois. Therefore, as required by 10 CFR 51.21, the NRC is issuing this environmental assessment and finding of no significant impact.

Environmental Assessment

Identification of the Proposed Action

The proposed action would allow a one-time exemption from the requirements of 10 CFR part 50, Appendix E, Item IV.F.2.c, regarding conduct of a full-participation exercise of the offsite emergency plan every 2 years. Under the proposed exemption, the licensee would reschedule the exercise originally scheduled for September 18, 2001, and complete the exercise requirements by December 31, 2002.

The proposed action is in accordance with the licensee's application for an exemption dated December 18, 2001.

The Need for the Proposed Action

Currently under 10 CFR part 50, Appendix E, Item IV.F.2.c, each licensee at each site is required to conduct a full-participation exercise of its offsite emergency plan every 2 years. Federal agencies, including the Federal Emergency Management Agency, observe these exercises and evaluate the performance of the licensee, state, and local authorities having a role under the emergency plan.

The licensee had initially scheduled a full participation biennial exercise of its onsite and offsite emergency plans for May 26, 2001, within the required 2-year interval. However, due to flooding conditions within the state and the need for state and local officials to address these needs, the exercise was conducted with participation by only the Illinois Department of Nuclear Safety and the licensee. The offsite portion of the exercise was rescheduled for September 18, 2001. However, as a result of the national security events occurring in the United States on September 11, 2001, this exercise was canceled after consultations with the Federal Emergency Management Agency and the Illinois Emergency Management Agency. Future full participation exercises for DNPS will be performed on the existing biennial schedule and are not affected by the requested exemption.

Environmental Impacts of the Proposed Action

The NRC has completed its evaluation of the proposed action and concludes that the proposed action involves an administrative activity unrelated to plant operations.

The proposed action will not significantly increase the probability or consequences of accidents, no changes are being made in the types of any effluents that may be released offsite, and there is no significant increase in occupational or public radiation exposure. Therefore, there are no significant radiological environmental impacts associated with the proposed action.

With regard to potential nonradiological impacts, the proposed action does not have the potential to affect any historic sites. It does not affect nonradiological plant effluents and has no other environmental impact. Therefore, there are no significant nonradiological environmental impacts associated with the proposed action.

Accordingly, the NRC concludes that there are no significant environmental impacts associated with the proposed action.

Environmental Impacts of the Alternatives to the Proposed Action

As an alternative to the proposed action, the staff considered denial of the proposed action (i.e., the ''no-action'' alternative). Denial of the proposed action would result in no change in current environmental impacts. The environmental impacts of the proposed action and the alternative action are similar.

Alternative Use of Resources

This action does not involve the use of any resources different than those previously considered in the Final Environmental Statement for DNPS, dated 1973.

Agencies and Persons Consulted

On December 19, 2001, the staff consulted with the Illinois State official, Frank Niziolek, of the Illinois Department of Nuclear Safety, regarding the environmental impact of the proposed action. The State official had no comments.

Finding of No Significant Impact

On the basis of the environmental assessment, the NRC concludes that the proposed action will not have a significant effect on the quality of the human environment. Accordingly, the NRC has determined not to prepare an environmental impact statement for the revised proposed action.

For further details with respect to the proposed action, see the licensee's letter dated December 18, 2001. Documents may be examined, and/or copied for a fee, at the NRC's Public Document Room (PDR), located at One White Flint North, 11555 Rockville Pike (first floor), Rockville, Maryland. Publicly available records will be accessible electronically from the ADAMS Public Library component on the NRC Web site, *http://www.nrc.gov* (the Public Electronic Reading Room). Persons who do not have access to ADAMS or who encounter problems in accessing the documents located in ADAMS, should contact the NRC PDR Reference staff by telephone at 1–800–397–4209, or 301–415–4737, or by e-mail at *pdr@nrc.gov.*

Dated at Rockville, Maryland, this 19th day of December 2001.

For the Nuclear Regulatory Commission.

Anthony J. Mendiola,

Chief, Section 2, Project Directorate III, Division of Licensing Project Management, Office of Nuclear Reactor Regulation.

[FR Doc. 01–31805 Filed 12–26–01; 8:45 am]

BILLING CODE 7590–01–P

NUCLEAR REGULATORY COMMISSION

Sunshine Meeting Notice

AGENCY HOLDING THE MEETING: Nuclear Regulatory Commission.

DATE: Weeks of December 24, 31, 2001, January 7, 14, 21, 28, 2002.

PLACE: Commissioners' Conference Room, 11555 Rockville Pike, Rockville, Maryland.

STATUS: Public and Closed.

MATTERS TO BE CONSIDERED:

Week of December 24, 2001

There are no meetings scheduled for the Week of December 24, 2001.

Week of December 31, 2001—Tentative

There are no meetings scheduled for the Week of December 31, 2001.

Week of January 7, 2002—Tentative

There are no meetings scheduled for the Week of January 7, 2002.

Week of January 14, 2002—Tentative

Tuesday, January 15, 2002

9:30 a.m. Briefing on Status of Nuclear Materials Safety (Public Meeting).

This meeting will be webcast live at the Web address—*www.nrc.gov.*

Week of January 21, 2002—Tentative

There are no meetings scheduled for the Week of January 21, 2002.

Week of January 28, 2002—Tentative

Tuesday, January 29, 2002

9:30 a.m. Briefing on Status of Nuclear Reactor Safety (Public Meeting).

This meeting will be webcast live at the Web address—*www.nrc.gov.*

Wednesday, January 30, 2002

9:30 a.m. Briefing on Status of OCIO Programs, Performance, and Plans (Public Meeting).

This meeting will be webcast live at the Web address—*www.nrc.gov.*

2:00 p.m. Discussion of Intragovernmental Issues (Closed—Ex. 1&9)

*The schedule for Commission meetings is subject to change on short notice. To verify the status of meetings call (recording)—(301) 415–1292. Contact person for more information: David Louis Gamberoni (301) 415–1651.

* * * * *

The NRC Commission Meeting Schedule can be found on the Internet at: *www.nrc.gov.*

* * * * *

This notice is distributed by mail to several hundred subscribers; if you no longer wish to receive it, or would like to be added to the distribution, please contact the Office of the Secretary, Washington, DC 20555 (301–415–1969). In addition, distribution of this meeting notice over the Internet system is available. If you are interested in receiving this Commission meeting schedule electronically, please send an electronic message to dkw@nrc.gov.

Dated: December 19, 2001.

Sandra M. Joosten,

Executive Assistant, Office of the Secretary.

[FR Doc. 01–31919 Filed 12–21–01; 11:40 am]

BILLING CODE 7590–01–M

NUCLEAR REGULATORY COMMISSION

Notice of Opportunity To Comment on Model Safety Evaluation on Technical Specification Improvement To Eliminate Post Accident Sampling Requirements for Boiling Water Reactors Using the Consolidated Line Item Improvement Process

AGENCY: Nuclear Regulatory Commission.

ACTION: Request for comment.

SUMMARY: Notice is hereby given that the staff of the Nuclear Regulatory Commission (NRC) has prepared a model safety evaluation (SE) relating to the elimination of requirements on post accident sampling imposed on licensees through orders, license conditions, or technical specifications. The NRC staff has also prepared a model no significant hazards consideration (NSHC) determination relating to this matter. The purpose of these models is to permit the NRC to efficiently process amendments that propose to remove requirements for the Post Accident Sampling System [or Station] (PASS) for Boiling Water Reactors (BWRs). Licensees of nuclear power reactors to which the models apply could request amendments conforming to the models. In such a request, a licensee should confirm the applicability of the SE and NSHC determination to its reactor and provide the requested plant-specific verifications and commitments. The NRC staff is requesting comments on the model SE and model NSHC determination before announcing their availability for referencing in license amendment applications.

DATES: The comment period expires January 28, 2002. Comments received after this date will be considered if it is practical to do so, but the Commission is able to ensure consideration only for comments received on or before this date.

ADDRESSES: Comments may be submitted either electronically or via U.S. mail.

Submit written comments to: Chief, Rules and Directives Branch, Division of Administrative Services, Office of Administration, Mail Stop: T–6 D59, U.S. Nuclear Regulatory Commission, Washington, DC 20555–0001.

Hand deliver comments to: 11545 Rockville Pike, Rockville, Maryland, between 7:45 a.m. and 4:15 p.m. on Federal workdays.

Copies of comments received may be examined at the NRC's Public Document Room, One White Flint North, 11555 Rockville Pike (first floor), Rockville, Maryland.

Comments may be submitted by electronic mail to *CLIIP@nrc.gov.*

FOR FURTHER INFORMATION CONTACT: William Reckley, Mail Stop: O–8H1, Division of Licensing Project Management, Office of Nuclear Reactor Regulation, U.S. Nuclear Regulatory Commission, Washington, DC 20555–0001, telephone 301–415–1389.

SUPPLEMENTARY INFORMATION:

Background

Regulatory Issue Summary 2000–06, ''Consolidated Line Item Improvement Process for Adopting Standard Technical Specification Changes for Power Reactors,'' was issued on March 20, 2000. The Consolidated Line Item Improvement Process (CLIIP) is intended to improve the efficiency and transparency of NRC licensing processes. This is accomplished by processing proposed changes to the Standard Technical Specifications (STS) in a manner that supports subsequent license amendment applications. The CLIIP includes an opportunity for the public to comment on proposed changes to the STS following a preliminary assessment by the NRC staff and finding that the change will likely be offered for adoption by licensees. This notice is soliciting comment on a proposed change to the STS that removes requirements for the PASS for BWRs. The CLIIP directs the NRC staff to evaluate any comments received for a proposed change to the STS and to either reconsider the change or to proceed with announcing the availability of the change for proposed adoption by licensees. Those licensees opting to apply for the subject change to technical specifications are responsible for reviewing the staff's evaluation, referencing the applicable technical justifications, and providing any necessary plant-specific information.

Each amendment application made in response to the notice of availability would be processed and noticed in accordance with applicable rules and NRC procedures.

This notice involves the elimination of requirements for PASS and related administrative controls in technical specifications for BWRs. This proposed change was proposed for incorporation into the standard technical specifications by the BWR Owners Group (BWROG) participants in the Technical Specification Task Force (TSTF) and is designated TSTF–413. TSTF–413 is supported by the NRC staff's safety evaluation dated June 12, 2001, for the BWROG topical report NEDO–32991, ''Regulatory Relaxation for BWR Post Accident Sampling Stations (PASS),'' which was submitted to the NRC on November 30, 2000. The BWROG request followed the staff's approval of similar requests for elimination of PASS requirements from the Combustion Engineering Owners Group (CEOG) and the Westinghouse Owners Group (WOG).

Applicability

This proposed change to remove requirements for PASS from technical specifications (and other elements of the licensing bases) is applicable to BWRs.

To efficiently process the incoming license amendment applications, the staff requests each licensee applying for the changes addressed by TSTF–413 using the CLIIP to address the following plant-specific verifications and regulatory commitments. The CLIIP does not prevent licensees from requesting an alternative approach or proposing the changes without the requested verifications and regulatory commitments. Variations from the approach recommended in this notice may, however, require additional review by the NRC staff and may increase the time and resources needed for the review. In making the requested regulatory commitments, each licensee should address: (1) That the subject capability exists (or will be developed) and will be maintained; (2) where the capability or procedure will be described (e.g., severe accident management guidelines, emergency operating procedures, emergency plan implementing procedures); and (3) a schedule for implementation. The amendment request need not provide details about designs or procedures.

Each licensee should verify that it has, and make a regulatory commitment to maintain (or make a regulatory commitment to develop and maintain):

a. Contingency plans for obtaining and analyzing highly radioactive samples from the reactor coolant system, suppression pool, and containment atmosphere;

b. A capability for classifying fuel damage events at the Alert level threshold (typically this is 300 μCi/ml dose equivalent iodine). This capability may use a normal sampling system or correlations of radiation readings to coolant concentrations; and

c. An I–131 site survey detection capability, including an ability to assess radioactive iodines released to offsite environs, by using effluent monitoring systems or portable sampling equipment.

Public Notices

In a notice in the **Federal Register** dated August 11, 2000 (65 FR 49271), the staff requested comment on the use of the CLIIP to process requests to delete post-accident sampling requirements from plants with Westinghouse and Combustion Engineering designs. Following the disposition of comments, the staff published a notice of availability of the staff's SE and NSHC determination for referencing using the CLIIP (65 FR 65018, October 31, 2000). Each request to eliminate PASS requirements by licensees for Westinghouse and CE plants using the CLIIP has also included notices prior to issuance of the subject license amendments and upon issuance.

This notice requests comments from interested members of the public within 30 days of the date of publication in the **Federal Register**. Following the staff's evaluation of comments received as a result of this notice, the staff may reconsider the proposed change or may proceed with announcing the availability of the change in a subsequent notice (perhaps with some changes to the safety evaluation or proposed no significant hazards consideration determination as a result of public comments). If the staff announces the availability of the change, licensees wishing to adopt the change will submit an application in accordance with applicable rules and other regulatory requirements. The staff will in turn issue for each application a notice of consideration of issuance of amendment to facility operating license(s), a proposed no significant hazards consideration determination, and an opportunity for a hearing. A notice of issuance of an amendment to operating license(s) will also be issued to announce the elimination of the PASS requirements for each plant that applies for and receives the requested change.

Proposed Safety Evaluation

U.S. Nuclear Regulatory Commission

Office of Nuclear Reactor Regulation

Consolidated Line Item Improvement, Technical Specification Task Force (TSTF) Change TSTF–413, Elimination of Requirements for Post Accident Sampling System [or Station] (PASS)

1.0 Introduction

In the aftermath of the accident at Three Mile Island (TMI), Unit 2, the Nuclear Regulatory Commission (NRC) imposed requirements on licensees for commercial nuclear power plants to install and maintain the capability to obtain and analyze post-accident samples of the reactor coolant and containment atmosphere. The desired capabilities of the Post Accident Sampling System [or Station] (PASS) were described in NUREG–0737, ''Clarification of TMI Action Plan Requirements.'' The NRC issued orders to licensees with plants operating at the time of the TMI accident to confirm the installation of PASS capabilities (generally as they had been described in NUREG–0737). A requirement for PASS and related administrative controls was added to the technical specifications (TS) of the operating plants and was included in the initial TS for plants licensed during the 1980s and 90s. Additional expectations regarding PASS capabilities were included in Regulatory Guide 1.97, ''Instrumentation for Light-Water-Cooled Nuclear Power Plants To Assess Plant and Environs Conditions During and Following an Accident.''

Significant improvements have been achieved since the TMI accident in the areas of understanding risks associated with nuclear plant operations and developing better strategies for managing the response to potentially severe accidents at nuclear plants. Recent insights about plant risks and alternate severe accident assessment tools have led the NRC staff to conclude that some TMI Action Plan items can be revised without reducing the ability of licensees to respond to severe accidents. The NRC's efforts to oversee the risks associated with nuclear technology more effectively and to eliminate undue regulatory costs to licensees and the public have prompted the NRC to consider eliminating the requirements for PASS in TS and other parts of the licensing bases of operating reactors.

The staff has completed its review of the topical report submitted by the Boiling Water Reactor (BWR) Owners Group (BWROG) that proposed the elimination of PASS. The justifications for the proposed elimination of PASS

requirements center on evaluations of the various radiological and chemical sampling and their potential usefulness in responding to a severe reactor accident or making decisions regarding actions to protect the public from possible releases of radioactive materials. As explained in more detail in the staff's safety evaluations for the topical report, the staff has reviewed the available sources of information for use by decision-makers in developing protective action recommendations and assessing core damage. Based on this review, the staff found that the information provided by PASS is either unnecessary or is effectively provided by other indications of process parameters or measurement of radiation levels. The staff agrees, therefore, with the owners group that licensees can remove the TS requirements for PASS, revise (as necessary) other elements of the licensing bases, and pursue possible design changes to alter or remove existing PASS equipment.

2.0 Background

In its letter dated November 30, 2000, the BWROG submitted for the NRC staff's review Topical Report NEDO–32991, ''Regulatory Relaxation for BWR Post Accident Sampling Stations (PASS),'' for eliminating PASS requirements from BWRs. The NRC staff's safety evaluation for the BWROG topical report is dated June 12, 2001 (ADAMS Accession Number ML011630016). The BWROG proposed that relaxation of the PASS requirements be incorporated into the standard technical specifications by submitting TSTF–413.

The NRC staff prepared this model safety evaluation (SE) relating to the elimination of requirements on post accident sampling for BWRs and solicited public comment [FR] in accordance with the CLIIP. The use of the CLIIP in this matter is intended to help the NRC to efficiently process amendments that propose to remove the PASS requirements from TS. Licensees of nuclear power reactors to which this model apply were informed [FR] that they could request amendments conforming to the model, and, in such requests, should confirm the applicability of the SE to their reactors and providing the requested plant-specific verifications and commitments.

3.0 Evaluation

The ways in which the requirements and recommendations for PASS were incorporated into the licensing bases of commercial nuclear power plants varied as a function of when plants were licensed. Plants that were operating at the time of the TMI accident are likely to have been the subject of confirmatory orders that imposed the PASS functions described in NUREG–0737 as obligations. The issuance of plant specific amendments to adopt this change, which would remove PASS and related administrative controls from TS, would also supercede the PASS specific requirements imposed by post-TMI confirmatory orders.

The technical evaluations for the elimination of PASS sampling requirements are provided in the safety evaluation dated June 12, 2001, for BWROG topical report NEDO–32991. As described in its safety evaluation for the topical report, the staff finds that the post-accident sampling requirements for the following may be eliminated for BWR plants:

1. Reactor coolant dissolved gases.
2. Reactor coolant hydrogen.
3. Reactor coolant oxygen.
4. Reactor coolant chlorides.
5. Reactor coolant pH.
6. Reactor coolant boron.
7. Reactor coolant conductivity.
8. Radioisotopes in the reactor coolant.
9. Containment hydrogen.
10. Containment oxygen.
11. Radioisotopes in the containment atmosphere.
12. Suppression pool pH.
13. Chlorides in the suppression pool.
14. Boron in the suppression pool.
15. Radioisotopes in the suppression pool.

The staff agrees that sampling of radioisotopes is not required to support emergency response decision making during the initial phases of an accident because the information provided by PASS is either unnecessary or is effectively provided by other indications of process parameters or measurement of radiation levels. Therefore, it is not necessary to have dedicated equipment to obtain this sample in a prompt manner.

The staff does, however, believe that there could be significant benefits to having information about the radioisotopes existing post-accident in order to address public concerns and plan for long-term recovery operations. As stated in the safety evaluation for the topical report, the staff has found that licensees could satisfy this function by developing contingency plans to describe existing sampling capabilities and what actions (e.g., assembling temporary shielding) may be necessary to obtain and analyze highly radioactive samples from the reactor coolant system (RCS), suppression pool, and containment atmosphere. (See item 4.1 under Verifications and Commitments.) The contingency plans for obtaining samples from the RCS, suppression pool, and containment atmosphere may also enable a licensee to derive information on parameters such as hydrogen concentrations in containment and the pH of water in the suppression pool. The staff considers the sampling of the suppression pool to be potentially useful in confirming calculations of pH and confirming that potentially unaccounted for acid sources have been sufficiently neutralized. The use of the contingency plans for obtaining samples would depend on the plant conditions and the need for information by the decision-makers responsible for responding to the accident.

In addition, the staff considers radioisotope sampling information to be useful in classifying certain types of events (such as a reactivity excursion or mechanical damage) that could cause fuel damage without having an indication of a loss of reactor coolant inventory. However, the staff agrees with the topical report's contentions that other indicators of failed fuel, such as radiation monitors, can be correlated to the degree of failed fuel. (See item 4.2 under Verifications and Commitments.)

In lieu of the information that would have been obtained from PASS, the staff believes that licensees should maintain or develop the capability to monitor radioactive iodines that have been released to offsite environs. This information would be useful for decision makers trying to assess a release of and limit the public's exposure to radioactive materials. (See item 4.3 under Verifications and Commitments.)

The staff believes that the changes related to the elimination of PASS that are described in the topical report, related safety evaluation and this proposed change to TS are unlikely to result in a decrease in the effectiveness of a licensee's emergency plan. Each licensee, however, must evaluate possible changes to its emergency plan in accordance with 10 CFR 50.54(q) to determine if the change decreases the effectiveness of its site-specific plan. Evaluations and reporting of changes to emergency plans should be performed in accordance with applicable regulations and procedures.

The staff notes that redundant, safety-grade, containment hydrogen concentration monitors are required by 10 CFR 50.44(b)(1), are addressed in NUREG–0737 Item II.F.1 and Regulatory Guide 1.97, and are relied upon to meet the data reporting requirements of 10 CFR part 50, Appendix E, Section VI.2.a.(ii)(3). The staff concludes that during the early phases of an accident,

the safety-grade hydrogen monitors provide an adequate capability for monitoring containment hydrogen concentration. The staff sees value in maintaining the capability to obtain grab samples for complementing the information from the hydrogen monitors in the long term (i.e., by confirming the indications from the monitors and providing hydrogen measurements for concentrations outside the range of the monitors). As previously mentioned, the licensee's contingency plan (see item 4.1) for obtaining highly radioactive samples will include sampling of the containment atmosphere and may, if deemed necessary and practical by the appropriate decision-makers, be used to supplement the safety-related hydrogen monitors.

Note 1: Each licensee should specify a desired implementation period for its specific amendment request. The implementation period would be that period necessary to develop and implement the items in 4.1 through 4.3 and, as necessary, to make other changes to documentation or equipment to support the elimination of PASS requirements. As an alternative, the licensee may choose to have a shorter implementation period and include the scheduling of items 4.1 through 4.3 as part of the regulatory commitments associated with this amendment request. Amendment requests that include commitments for implementation of the items in Section 4 within 6 months of the implementation of the revised TS will remain within the CLIIP.

Note 2: There may be some collateral changes to the TS as a result of the removal of the administrative controls section for PASS. The following paragraphs address three potential changes that the staff is aware of (editorial changes, mention of PASS as a potential leakage source outside containment, and revision of the bases section for post accident monitoring instrumentation).

(A) The elimination of the TS and other regulatory requirements for PASS would result in additional changes to TS such as [e.g., the renumbering of sections or pages or the removal of references]. The changes are included in the licensee's application to revise the TS in order to take advantage of the CLIIP. The staff has reviewed the changes and agrees that the revisions are necessary due to the removal of the TS section on PASS. The changes do not revise technical requirements beyond that reviewed by the NRC staff in connection with the supporting topical reports or the preparation of the TS improvement incorporated into the CLIIP.

(B) The TS include an administrative requirement for a program to minimize to levels as low as practicable the leakage from those portions of systems outside containment that could contain highly radioactive fluids during a serious transient or accident. The program includes preventive maintenance, periodic inspections, and leak tests for the identified systems. PASS is specifically listed in TS [5.5.2] as falling under the scope of this requirement. The applicability of this specification depends on whether or not PASS is maintained as a system that is a potential leakage path. [Note that several options (see following) exist for handling the impact that eliminating PASS requirements would have on the specification for the program to control leakage outside containment.

(i) The licensee has stated that a plant change would be implemented such that PASS would not be a potential leakage path outside containment for highly radioactive fluids (e.g., the PASS piping that penetrates the containment would be cut and capped). The modification would be made during the implementation period for this amendment such that it is appropriate to delete the reference to PASS in TS [5.5.2]. Requirements in NRC regulations (e.g., 10 CFR part 50, Appendix J) and other TS provide adequate regulatory controls over the licensee's proposed modification to eliminate PASS as a potential leakage path.

(ii) The licensee has stated that a plant change might be implemented such that PASS would not be a potential leakage path outside containment for highly radioactive fluids (e.g., the PASS piping that penetrates the containment might be cut and capped). The modification would not be made during the implementation period for this amendment. The licensee has proposed to add the following phrase to the reference to PASS in TS [5.5.2]:

''(until such time as a modification eliminates the PASS penetration as a potential leakage path).''

The above phrase would make clear that TS [5.5.2] remains applicable to the PASS as long as it is a possible leakage path and reflects that the actual modification of the piping system may be scheduled beyond the implementation period for this amendment. Requirements in NRC regulations (10 CFR part 50, Appendix J) and other TS provide adequate regulatory control over the licensee's modification to eliminate PASS as a potential leakage path. Following the modification to eliminate PASS as a potential leakage path, the licensee may elect (in order to maintain clarity and simplicity of the requirement) to revise TS [5.5.2] to remove the reference to PASS, including the phrase added by this amendment.

(iii) The licensee has stated that the configuration of the PASS will continue to be a potential leakage path outside containment for highly radioactive fluids (e.g., the PASS piping will penetrate the containment with valves or other components in the system from which highly radioactive fluid could leak). The licensee has [not proposed to change TS (5.5.2) or has changed TS (5.5.2) to revise the reference to this system from PASS to ( )]. The staff agrees [that TS 5.5.2 is not affected or that the change to revise the reference from PASS to ( )] is acceptable. A separate amendment request will be required if the licensee, subsequent to this amendment, decides to modify the plant to eliminate this potential leakage path and proposes to change the requirements of TS [5.5.2].

(C) [Note-optional section if licensee provides markup of affected Bases pages] The elimination of PASS requires that the licensee revise the discussion in the Bases section for TS [3.3.3, ''Post Accident Monitoring Instrumentation']. The current Bases mention the capabilities of PASS as part of the justification for allowing both hydrogen monitor channels to be out of service for a period of up to 72 hours. Although the licensee's application included possible wording for the revised Bases discussion for TS [3.3.3], the licensee will formally address the change to the Bases in accordance with [the Bases Control Program or its administrative procedure for revising Bases]. The staff does not believe that the Bases change will require prior NRC approval when evaluated against the criteria in 10 CFR 50.59, ''Changes, tests, and experiments,'' and, therefore, agrees that the revision of the Bases to TS [3.3.3] should be addressed separately from this amendment and should be included in a future update of the TS Bases in accordance with [the Bases Control Program or the licensee's administrative controls].

4.0 Verifications and Commitments

As requested by the staff in the notice of availability for this TS improvement, the licensee has addressed the following plant-specific verifications and commitments.

4.1 Each licensee should verify that it has, and make a regulatory commitment to maintain (or make a regulatory commitment to develop and maintain), contingency plans for obtaining and analyzing highly radioactive samples of reactor coolant, suppression pool, and containment atmosphere.

The licensee has [verified that it has or made a regulatory commitment to develop] contingency plans for obtaining and analyzing highly radioactive samples from the RCS, suppression pool, and containment atmosphere. The licensee has committed to maintain the contingency plans within its [specified document or

program]. The licensee has [implemented this commitment or will implement this commitment by (specified date)].

4.2 Each licensee should verify that it has, and make a regulatory commitment to maintain (or make a regulatory commitment to develop and maintain), a capability for classifying fuel damage events at the Alert level threshold (typically this is 300 μCi/ml dose equivalent iodine). This capability may utilize the normal sampling system and/or correlations of radiation readings to radioisotope concentrations in the reactor coolant.

The licensee has [verified that it has or made a regulatory commitment to develop] a capability for classifying fuel damage events at the Alert level threshold. The licensee has committed to maintain the capability for the Alert classification within its [specified document or program]. The licensee has [implemented this commitment or will implement this commitment by (specified date)].

4.3 Each licensee should verify that it has, and make a regulatory commitment to maintain (or make a regulatory commitment to develop and maintain), an I–131 site survey detection capability, including an ability to assess radioactive iodines released to offsite environs, by using effluent monitoring systems or portable sampling equipment.

The licensee has [verified that it has or made a regulatory commitment to develop] an I–131 site survey detection capability, including an ability to assess radioactive iodines released to offsite environs, by using effluent monitoring systems or portable sampling equipment. The licensee has committed to maintain the capability for monitoring iodines within its [specified document or program]. The licensee has [implemented this commitment or will implement this commitment by (specified date)].

The NRC staff finds that reasonable controls for the implementation and for subsequent evaluation of proposed changes pertaining to the above regulatory commitments are provided by the licensee's administrative processes, including its commitment management program. Should the licensee choose to incorporate a regulatory commitment into the emergency plan, final safety analysis report, or other document with established regulatory controls, the associated regulations would define the appropriate change-control and reporting requirements. The staff has determined that the commitments do not warrant the creation of regulatory requirements, which would require prior NRC approval of subsequent changes. The NRC staff has agreed that NEI 99–04, Revision 0, ''Guidelines for Managing NRC Commitment Changes,'' provides reasonable guidance for the control of regulatory commitments made to the NRC staff. (See Regulatory Issue Summary 2000–17, Managing Regulatory Commitments Made by Power Reactor Licensees to the NRC Staff, dated September 21, 2000 [ADAMS Accession Number ML003741774].) The commitments should be controlled in accordance with the industry guidance or comparable criteria employed by a specific licensee. The staff may choose to verify the implementation and maintenance of these commitments in a future inspection or audit.

5.0 State Consultation

In accordance with the Commission's regulations, the [ ] State official was notified of the proposed issuance of the amendments. The State official had [(1) no comments or (2) the following comments—with subsequent disposition by the staff].

6.0 Environmental Consideration

The amendments change a requirement with respect to the installation or use of a facility component located within the restricted area as defined in 10 CFR part 20 and change surveillance requirements. The NRC staff has determined that the amendments involve no significant increase in the amounts and no significant change in the types of any effluents that may be released offsite, and that there is no significant increase in individual or cumulative occupational radiation exposure. The Commission has previously issued a proposed finding that the amendments involve no significant hazards consideration, and there has been no public comment on such finding (FR). Accordingly, the amendments meet the eligibility criteria for categorical exclusion set forth in 10 CFR 51.22(c)(9). Pursuant to 10 CFR 51.22(b) no environmental impact statement or environmental assessment need be prepared in connection with the issuance of the amendments.

7.0 Conclusion

The Commission has concluded, based on the considerations discussed above, that (1) there is reasonable assurance that the health and safety of the public will not be endangered by operation in the proposed manner, (2) such activities will be conducted in compliance with the Commission's regulations, and (3) the issuance of the amendments will not be inimical to the common defense and security or to the health and safety of the public.

Proposed No Significant Hazards Consideration Determination

Description of Amendment Request: The proposed amendments delete requirements from the Technical Specifications (and, as applicable, other elements of the licensing bases) to maintain a Post Accident Sampling System [or Station] (PASS). Licensees were generally required to implement PASS upgrades as described in NUREG–0737, ''Clarification of TMI [Three Mile Island] Action Plan Requirements,'' and Regulatory Guide 1.97, ''Instrumentation for Light-Water-Cooled Nuclear Power Plants to Assess Plant and Environs Conditions During and Following an Accident.'' Implementation of these upgrades was an outcome of the lessons learned from the accident that occurred at TMI, Unit 2. Requirements related to PASS were imposed by Order for many facilities and were added to or included in the technical specifications (TS) for nuclear power reactors currently licensed to operate. Lessons learned and improvements implemented over the last 20 years have shown that the information obtained from PASS can be readily obtained through other means or is of little use in the assessment and mitigation of accident conditions.

Basis for proposed no significant hazards consideration determination: As required by 10 CFR 50.91(a), an analysis of the issue of no significant hazards consideration is presented below:

Criterion 1—The Proposed Change Does Not Involve a Significant Increase in the Probability or Consequences of an Accident Previously Evaluated.

The PASS was originally designed to perform many sampling and analysis functions. These functions were designed and intended to be used in post accident situations and were put into place as a result of the TMI–2 accident. The specific intent of the PASS was to provide a system that has the capability to obtain and analyze samples of plant fluids containing potentially high levels of radioactivity, without exceeding plant personnel radiation exposure limits. Analytical results of these samples would be used largely for verification purposes in aiding the plant staff in assessing the extent of core damage and subsequent offsite radiological dose projections. The system was not intended to and does not serve a function for preventing

accidents and its elimination would not affect the probability of accidents previously evaluated.

In the 20 years since the TMI–2 accident and the consequential promulgation of post accident sampling requirements, operating experience has demonstrated that a PASS provides little actual benefit to post accident mitigation. Past experience has indicated that there exists in-plant instrumentation and methodologies available in lieu of a PASS for collecting and assimilating information needed to assess core damage following an accident. Furthermore, the implementation of Severe Accident Management Guidance (SAMG) emphasizes accident management strategies based on in-plant instruments. These strategies provide guidance to the plant staff for mitigation and recovery from a severe accident. Based on current severe accident management strategies and guidelines, it is determined that the PASS provides little benefit to the plant staff in coping with an accident.

The regulatory requirements for the PASS can be eliminated without degrading the plant emergency response. The emergency response, in this sense, refers to the methodologies used in ascertaining the condition of the reactor core, mitigating the consequences of an accident, assessing and projecting offsite releases of radioactivity, and establishing protective action recommendations to be communicated to offsite authorities. The elimination of the PASS will not prevent an accident management strategy that meets the initial intent of the post-TMI–2 accident guidance through the use of the SAMGs, the emergency plan (EP), the emergency operating procedures (EOP), and site survey monitoring that support modification of emergency plan protective action recommendations (PARs).

Therefore, the elimination of PASS requirements from Technical Specifications (TS) (and other elements of the licensing bases) does not involve a significant increase in the consequences of any accident previously evaluated.

Criterion 2—The Proposed Change Does Not Create the Possibility of a New or Different Kind of Accident from any Previously Evaluated.

The elimination of PASS related requirements will not result in any failure mode not previously analyzed. The PASS was intended to allow for verification of the extent of reactor core damage and also to provide an input to offsite dose projection calculations. The PASS is not considered an accident precursor, nor does its existence or elimination have any adverse impact on the pre-accident state of the reactor core or post accident confinement of radioisotopes within the containment building.

Therefore, this change does not create the possibility of a new or different kind of accident from any previously evaluated.

Criterion 3—The Proposed Change Does Not Involve a Significant Reduction in the Margin of Safety.

The elimination of the PASS, in light of existing plant equipment, instrumentation, procedures, and programs that provide effective mitigation of and recovery from reactor accidents, results in a neutral impact to the margin of safety. Methodologies that are not reliant on PASS are designed to provide rapid assessment of current reactor core conditions and the direction of degradation while effectively responding to the event in order to mitigate the consequences of the accident. The use of a PASS is redundant and does not provide quick recognition of core events or rapid response to events in progress. The intent of the requirements established as a result of the TMI–2 accident can be adequately met without reliance on a PASS.

Therefore, this change does not involve a significant reduction in the margin of safety.

Based upon the reasoning presented above and the previous discussion of the amendment request, the requested change does not involve a significant hazards consideration.

Dated at Rockville, Maryland, this 18th day of December 2001.

For the Nuclear Regulatory Commission.

William D. Beckner,

Chief, Technical Specification Branch, Division of Regulatory Improvement Programs, Office of Nuclear Reactor Regulation.

[FR Doc. 01–31803 Filed 12–26–01; 8:45 am]

BILLING CODE 7590–01–P

POSTAL SERVICE

United Postal Service Board of Governors; Sunshine Act Meeting

TIMES AND DATES: 8 a.m., Monday, January 7, 2002; 8:30 a.m., Tuesday, January 8, 2002.

PLACE: Washington, D.C., at U.S. Postal Service Headquarters, 475 L'Enfant Plaza, SW., in the Benjamin Franklin Room.

STATUS: January 7—8 a.m. (Closed); January 8—8:30 a.m. (Open).

MATTERS TO BE CONSIDERED:

Monday, January 7—8 a.m. (Closed)

1. Personnel Matters and Compensation Issues.
2. Management Compensation Strategy.
3. Financial Performance.
4. Strategic Planning.

Tuesday, January 8—8:30 a.m. (Open)

1. Minutes of the Previous Meetings, December 3–4, and December 13, 2001.
2. Remarks of the Postmaster General and CEO.
3. Consideration of Board Resolution on Capital Funding.
4. Annual Report on Government in the Sunshine Act Compliance.
5. Fiscal Year 2001 Annual Report.

Tuesday, January 8—8:30 a.m. (Open) [continued]

6. Semipostal Stamps.
7. Quarterly Report on Financial Performance.
8. Quarterly Report on Service Performance.
9. Election of Chairman and Vice Chairman of the Board of Governors.
10. Tentative Agenda for the February 4–5, 2002, meeting in Phoenix, Arizona.

CONTACT PERSON FOR MORE INFORMATION: David G. Hunter, Secretary of the Board, U.S. Postal Service, 475 L'Enfant Plaza, SW., Washington, DC 20260–1000. Telephone (202) 268–4800.

David G. Hunter,

Secretary.

[FR Doc. 01–31965 Filed 12–21–01; 1:34 pm]

BILLING CODE 7710–12–M

SECURITIES AND EXCHANGE COMMISSION

[Release No. IC–25320; 812–12684]

Sensar Corporation; Notice of Application

December 19, 2001.

AGENCY: Securities and Exchange Commission (''Commission'').

ACTION: Notice of an application for an order under section 6(c) of the Investment Company Act of 1940 (the ''Act'').

SUMMARY OF APPLICATION: Sensar Corporation (''Applicant'') requests an order exempting it from all provisions of the Act until the earlier of one year from the date that the requested order is

issued or the date that it no longer may be deemed to be an investment company.

FILING DATES: The application was filed on November 13, 2001, and amended on December 19, 2001.

HEARING OR NOTIFICATION OF HEARING: An order granting the application will be issued unless the Commission orders a hearing. Interested persons may request a hearing by writing to the Commission's Secretary and serving applicants with a copy of the request, personally or by mail. Hearing requests should be received by the Commission by 5:30 p.m. on January 11, 2002, and should be accompanied by proof of service on applicant, in the form of an affidavit, or for lawyers, a certificate of service. Hearing requests should state the nature of the writer's interest, the reason for the request, and the issues contested. Persons who wish to be notified of a hearing may request notification by writing to the Commission's Secretary.

ADDRESSES: Secretary, Commission, 450 Fifth Street, NW., Washington, DC 20549–0609. Applicant, c/o Stoel Rives LLP, 201 South Main Street, Suite 1100, Salt Lake City, UT 84111.

FOR FURTHER INFORMATION, CONTACT: Stacy L. Fuller, Senior Counsel, at 202–942–0553, or Janet M. Grossnickle, Branch Chief, at 202–942–0564 (Division of Investment Management, Office of Investment Company Regulation).

SUPPLEMENTARY INFORMATION: The following is a summary of the application. The complete application may be obtained for a fee at the Commission's Public Reference Branch, 450 Fifth Street, NW., Washington, DC 20549–0102 (telephone 202–942–8090).

Applicant's Representations

1. Applicant is a Nevada corporation whose principal offices are in Utah. Prior to August 1999, Applicant was engaged in the design, development, manufacturing, and marketing of analytical scientific instrumentation. Between March and August 1999, Applicant sold substantially all of its assets related to such business and began to search for an acquisition. In September 1999, Applicant entered into negotiations with Net2Wireless Corporation (now known as Jigami Corporation) (''Jigami'') to acquire Jigami, and devoted substantial time in the remainder of 1999 and 2000 to completing the acquisition. On December 1, 2000, Nasdaq informed Applicant that it had determined to deny the listing application for the combined company (or initiate delisting proceedings against Applicant if Jigami merged into Applicant). The proposed merger was abandoned, and on December 4, 2000, Applicant and Jigami entered into a settlement, whereby Applicant received 3,000,000 shares of Jigami stock and a warrant to acquire another 1,000,000 shares, representing approximately 14.1% of the outstanding capital stock of Jigami. As a result of the settlement, on December 4, 2000, Applicant's assets consisted of approximately (a) $3.25 million of cash, (b) $2 million of Jigami securities, and (c) $67,000 of other assets that were not securities.

2. In January 2001, Applicant determined that it might be deemed to be an investment company under section 3(a)(1)(C) of the Act as of the date that it acquired the securities of Jigami. Based on the information available to Applicant at that time, Applicant did not believe that it could alter its investment in Jigami so as to reduce the value of its investment securities to less than 40% of its total assets (exclusive of government securities and cash). Accordingly, Applicant determined that its best alternative was to try to qualify, and make election under section 54 of the Act, to become a business development company, as defined in section 2(a)(48) of the Act (''BDC''). On January 22, 2001, as part of its plan to become a BDC, Applicant purchased 3.5% of the outstanding shares of common stock of a privately held company (''Private Company'') for $750,000.

3. At the end of the first quarter of 2001, Applicant wrote down the value of the Jigami investment to zero. As of March 31, 2001, Applicant's assets consisted of approximately (a) $2.35 million of cash, (b) $750,000 of Private Company's securities, and (c) $82,000 of other assets that were not securities. In light of the changes in Applicant's assets, Applicant then began to focus its efforts on a revised strategy of actively attempting to purchase an operating business.

Applicant's Legal Analysis

1. Under section 3(a)(1)(C) of the Act, an issuer is an investment company if it is engaged or proposes to engage in the business of investing, reinvesting, owning, holding or trading in securities, and owns or proposes to acquire investment securities having a value exceeding 40 percent of the value of such issuer's total assets (exclusive of government securities and cash items) on an unconsolidated basis. Section 3(a)(2) of the Act defines ''investment securities'' to include all securities except government securities, securities issued by employees' securities companies, and securities issued by majority-owned subsidiaries of the owner that are not investment companies and are not relying on the exception from the definition of investment company in section 3(c)(1) or 3(c)(7) of the Act.

2. Applicant states that the Jigami securities acquired on December 4, 2000, and the Private Company securities acquired on January 22, 2001, constitute ''investment securities'' within the meaning of section 3(a)(2) of the Act. Applicant states that because investment securities have represented substantially all of its non-cash assets since December 4, 2000, Applicant may be deemed to be an investment company within the meaning of section 3(a)(1)(C) of the Act.

3. Section 6(c) of the Act permits the Commission to exempt any person from any provision of the Act, if and to the extent that the exemption is necessary or appropriate in the public interest and consistent with the protection of investors and the purposes fairly intended by the policy and provisions of the Act.

4. Applicant requests an exemption under section 6(c) from all provisions of the Act until the earlier of one year from the date that the requested order is issued or the date that Applicant no longer may be deemed to be an investment company. Applicant believes that within the period covered by the requested order, it will be able to complete an acquisition of or a merger with an operating business.

5. Applicant states that its failure to become primarily engaged in a non-investment business or an excepted business within the past year was due to factors beyond its control and that, during the period, its officers tried in good faith to invest Applicant's assets in a non-investment business or excepted business. Specifically, Applicant states that once it realized that it might be deemed to be an investment company under section 3(a)(1)(C), it took steps to comply with the Act, first by pursuing BDC status, and later by pursuing a merger or acquisition. Applicant states that in its pursuit of a suitable merger with or acquisition of an operating business, it has actively investigated 30 companies and completed field due diligence on four such companies. Applicant contends that it has been hampered in its efforts to find a suitable partner or target by the recent economic downturn. Applicant further states that on or about December 13, 2001, Applicant entered into a non-binding letter of intent with VitalStream, Inc.

(''VitalStream''), a California-based digital broadcasting company, pursuant to which VitalStream would merge with and into a wholly-owned subsidiary of Applicant. Applicant states that it expects the proposed merger to close in the first or second quarter of 2002. Applicant further states that, in addition to seeking to merge with or acquire an operating business, it has attempted to sell the Private Company securities by convincing Private Company to repurchase the securities, discussing a sale with existing shareholders of Private Company, and contacting other persons who have shown an interest in Private Company. Applicant states that it is continuing to attempt to find a purchaser for its block of Private Company securities. In addition, Applicant states that since determining to pursue operating company status at the end of the first quarter of 2001, it has declined to make additional investments in Private Company and has not acquired any other investment securities. Applicant also states that it will hold its cash assets in federally insured money market or demand accounts. Finally, Applicant notes that on November 7, 2001, the Board formalized the decision to pursue operating company status by adopting a resolution that directs Applicant to abandon its efforts to become a BDC and take whatever steps are necessary to become an operating company.

6. Applicant contends that registration under the Act would involve an unnecessary burden and expense for Applicant and its shareholders and would serve no regulatory purpose. For the reasons discussed above, Applicant asserts that the requested relief is consistent with the protection of investors and the purposes fairly intended by the policy and provisions of the Act.

Applicant's Conditions

1. Applicant will not acquire additional investment securities, as defined in section 3(a)(2) of the Act, or engage in the trading of securities for short-term speculative purposes.

2. Applicant will not hold itself out as being engaged in the business of investing, reinvesting, owning, holding or trading in securities.

For the Commission, by the Division of Investment Management, under delegated authority.

Margaret H. McFarland,

Deputy Secretary.

[FR Doc. 01–31740 Filed 12–26–01; 8:45 am]

BILLING CODE 8010–01–P

SECURITIES AND EXCHANGE COMMISSION

[Release No. 34–45166, File No. 4–208]

Joint Industry Plan; Order Approving Amendments To Add Chicago Board Options Exchange, Inc. as Participant to Joint-SRO Plan Under Rule 11Ac1–5

December 18, 2001.

I. Introduction

On July 11, 2001, the Chicago Board Options Exchange, Inc. (''CBOE'' or ''Exchange'') submitted to the Securities and Exchange Commission (''SEC'' or ''Commission'') in accordance with section 11A of the Securities Exchange Act of 1934 (''Act'') [1] and rule 11Aa3–2 thereunder,[2] a proposed amendment to the national market system plan establishing procedures under rule 11Ac1–5 (''Joint-SRO Plan'' or ''Plan'').[3] Under the proposed amendment, the CBOE would be added as a participant to the Joint-SRO Plan. Notice of filing and an order granting temporary effectiveness of the proposal through December 19, 2001 was published in the **Federal Register** on August 21, 2001.[4] The Commission did not receive any comments on the proposed amendment. This order approves the amendment on a permanent basis.

II. Discussion

The Joint-SRO Plan establishes procedures for market centers to follow in making their monthly reports required pursuant to rule 11Ac1–5, available to the public in a uniform, readily accessible, and usable electronic format. The current participants to the Plan are the American Stock Exchange LLC, Boston Stock Exchange, Inc., Chicago Stock Exchange, Inc., Cincinnati Stock Exchange, Inc., National Association of Securities Dealers, Inc., New York Stock Exchange, Inc., Pacific Exchange, Inc., and Philadelphia Stock Exchange, Inc.

The amendment adds the CBOE as a participant to the Joint-SRO Plan. Section III(b) of the Joint-SRO Plan provides that a national securities exchange or national securities association may become a party to the Plan by: (1) Executing a copy of the Plan, as then in effect (with the only changes being the addition of the new participant's name in section II(a) of the Plan and the new participant's single-digit code in section VI(a)(1) of the Plan) and (ii) submitting such executed plan to the Commission for approval. The CBOE submitted a signed copy of the Joint-SRO Plan to the Commission in accordance with the procedures set forth in the Plan regarding new participants.

After careful review, the Commission finds that the amendment to the Joint-SRO Plan is consistent with the requirements of the Act and the rules and regulations thereunder. Specifically, the Commission finds that the proposed amendment is consistent with the requirements of section 11A of the Act,[5] and rule 11Aa3–2 [6] thereunder. The Plan established appropriate procedures for market centers to follow in making their monthly reports required pursuant to rule 11Ac1–5 available to the public in a uniform, readily accessible, and usable electronic format. The amendment to include the CBOE as a participant in the Joint-SRO Plan should contribute to the maintenance of fair and orderly markets and remove impediments to and perfect the mechanisms of a national market system by facilitating the uniform public disclosure of order execution information by all market centers. The Commission believes that it is necessary and appropriate in the public interest, for the maintenance of fair and orderly markets, to remove impediments to, and perfect mechanisms of, a national market system to allow the CBOE to become a participant in the Joint-SRO Plan. The Commission finds, therefore, that approving the amendment to the Joint-SRO Plan is appropriate and consistent with section 11A of the Act.[7]

III. Conclusion

It is therefore ordered, pursuant to section 11A(a)(3)(B) of the Act [8] and rule 11Aa3–2 thereunder,[9] that the amendment to the Joint-SRO Plan to add the CBOE as a participant is approved and the CBOE is authorized to act jointly with the other participants to the Joint-SRO Plan in planning, developing, operating, or regulating the Plan as a means of facilitating a national market system.

[1] 15 U.S.C. 78k–1.

[2] 17 CFR 240.11Aa3–2.

[3] *See* Securities and Exchange Act Release No. 44177 (April 12, 2001), 66 FR 19814.

[4] *See* Securities and Exchange Act Release No. 44703 (August 15, 2001), 66 FR 43924.

[5] 15 U.S.C. 78k–1.

[6] 17 CFR 240.11Aa3–2.

[7] 15 U.S.C. 78k–1.

[8] 17 CFR 200.30⅓(a)(16).

[9] 17 CFR 240.11Aa3–2.

For the Commission, by the Division of Market Regulation, pursuant to delegated authority.[10]

Margaret H. McFarland,

Deputy Secretary.

[FR Doc. 01–31697 Filed 12–26–01; 8:45 am]

BILLING CODE 8010–01–M

SECURITIES AND EXCHANGE COMMISSION

[Release 34–45164; File No. 600–23]

Self-Regulatory Organizations; Government Securities Clearing Corporation; Notice of Filing and Order Approving an Extension of Temporary Registration as a Clearing Agency

December 18, 2001.

The Securities and Exchange Commission (''Commission'') is publishing this notice and order to solicit comments from interested persons and to extend the Government Securities Clearing Corporation's (''GSCC'') temporary registration as a clearing agency through June 30, 2002. On May 24, 1988, pursuant to sections 17A(b) and 19(a) of the Act [1] and rule 17Ab2–1 promulgated thereunder,[2] the Commission granted GSCC registration as a clearing agency on a temporary basis for a period of three years.[3] The Commission subsequently has extended GSCC's registration through December 31, 2001.[4] On December 13, 2001, GSCC requested that the Commission extend GSCC's temporary registration until such time as the Commission is prepared to grant GSCC permanent registration.[5]

The Commission today is extending GSCC's temporary registration as a clearing agency in order that GSCC may continue to act as a clearing agency while the Commission seeks comment on granting GSCC permanent registration as a clearing agency. The Commission expects to publish notice requesting comments on permanent registration as a clearing agency during the first quarter of next year.[6]

Interested persons are invited to submit written data, views, and arguments concerning the foregoing application. Such written data, views, and arguments will be considered by the Commission in granting registration or instituting proceedings to determine whether registration should be denied in accordance with section 19(a)(1) of the Act.[7] Persons making written submissions should file six copies thereof with the Secretary, Securities and Exchange Commission, 450 Fifth Street, NW, Washington, DC 20549–0609. Copies of the application for registration and all written comments will be available for inspection at the Commission's Public Reference Room, 450 Fifth Street, NW, Washington, DC 20549–0102. All submissions should refer to File No. 600–23 and should be submitted by January 17, 2002.

It is therefore ordered that GSCC's temporary registration as a clearing agency (File No. 600–23) be and hereby is extended through June 30, 2002.

For the Commission by the Division of Market Regulation, pursuant to delegated authority.[8]

Margaret H. McFarland,

Deputy Secretary.

[FR Doc. 01–31696 Filed 12–26–01; 8:45 am]

BILLING CODE 8010–01–M

[10] 17 CFR 200.30–3(a)(29).

[1] 15 U.S.C. 78q–1(b) and 78s(a).

[2] 17 CFR 240.17Ab2–1.

[3] Securities Exchange Act Release No. 25740 (May 24, 1988), 53 FR 19639.

[4] Securities Exchange Act Release Nos. 25740 (May 24, 1988), 53 FR 19639; 29236 (May 24, 1991), 56 FR 24852; 32385 (June 3, 1993), 58 FR 32405; 35787 (May 31, 1995), 60 FR 30324; 36508 (November 27, 1995), 60 FR 61719; 37983 (November 25, 1996), 61 FR 64183; 38698 (May 30, 1997), 62 FR 30911; 39696 (February 24, 1998), 63 FR 10253; 41104 (February 24, 1999), 64 FR 10510; 41805 (August 27, 1999), 64 FR 48682; 42335 (January 12, 2000), 65 FR 3509; 43089 (July 28, 2000), 65 FR 48032; 43900 (January 29, 2001), 66 FR 8988; and 44553 (July 13, 2001), 66 FR 37714.

[5] Letter from Jeffrey Ingber, Managing Director, General Counsel, and Secretary, GSCC (December 11, 2001).

[6] The Commission continues to consider two issues related to GSCC's permanent registration status: (1) GSCC's organizational structure after its integration with The Depository Trust & Clearing Corporation and (2) the appropriate standard of care for GSCC.

[7] 15 U.S.C. 78s(a)(1).

[8] 17 CFR 200.30–3(a)(16).

SECURITIES AND EXCHANGE COMMISSION

[Release No. 34–45165; File No. SR–Amex–2001–102]

Self-Regulatory Organizations; Notice of Filing of Proposed Rule Change by the American Stock Exchange LLC Relating to an Increase in Floor, Membership and Options Trading Fees

December 18, 2001.

Pursuant to section 19(b)(1) of the Securities Exchange Act of 1934 (''Act''),[1] and rule 19b–4 [2] thereunder, notice is hereby given that on December 6, 2001, the American Stock Exchange LLC (''Amex'' or ''Exchange'') filed with the Securities and Exchange Commission (the ''Commission'') the proposed rule change as described in Items I, II, and III below, which Items have been prepared by the Exchange. Amendment No. 1 was filed on December 17, 2001.[3] The Commission is publishing this notice to solicit comments on the proposed rule change from interested persons.

I. Self-Regulatory Organization's Statement of the Terms of Substance of the Proposed Rule Change

The Exchange has proposed to increase floor, membership and option trading fees under SR–Amex–2001–101,[4] which was filed for immediate effectiveness pursuant to section 19(b)(3)(A)(ii) of the act.[5] The Exchange now seeks to impose these increased floor, membership, options trading, and comparison and floor brokerage fees, as set forth in Amex–2001–101 and described below, as of August 1, 2001. In addition, the Exchange proposes to impose the increased license fees and the elimination of the fee cap for options as October 1, 2001.

II. Self-Regulatory Organization's Statement of the Purpose of, and Statutory Basis for, the Proposed Rule Change

In its filing with the Commission, the Exchange included statements concerning the purpose of and basis for the proposed rule change and discussed any comments it received on the proposed rule change. The text of these statements may be examined at the places specified in Item IV below. The Exchange has prepared summaries, set forth in section A, B, and C below, of the most significant aspects of such statements.

A. Self-Regulatory Organization's Statement of the Purpose of, and Statutory Basis for, the Proposed Rule Change

(1) Purpose

The Exchange proposes to impose floor fees, member fees and options transactions, comparison and Floor brokerage fees as of August 1, 2001, and certain license fees and elimination of the options fee cap as of October 1, 2001. The Exchange filed these fee changes under SR–Amex–2001–101 and requested that they become immediately

[1] 15 U.S.C. 78s(b)(1).

[2] 17 CFR 240.19b–4.

[3] *See* letter from Claire P. McGrath, Vice President and Deputy General Counsel, Amex, to Nancy Sanow, Assistant Director, Division of Market Regulation (''Division''), Commission, dated December 14, 2001 (''Amendment No. 1''), In Amendment No. 1, the Amex provided greater detail as to the basis for the proposed rule change.

[4] *See* Securities Exchange Act Release No. 45163 (December 18, 2001) for a description of these increased fees.

[5] 15 U.S.C. 78s(b)(3)(a)(ii).

effective under section 19(b)(3)(A) of the Act.[6]

According to the Exchange, application of the Floor, member, and options fees as of August 1, 2001, will allow it to recoup a portion of costs it incurred during 2001 in providing enhancements to the Floor, which include major improvements in technology, facilities and services. These enhancements included a major expansion of the Amex trading floor in 2001. The Exchange believes that these fee increases better align its fees with the actual cost of delivering services and reduce Exchange subsidization of such services. The Exchange notes that such subsidies have been longstanding and preceded August 1, 2001. Therefore, the Exchange believes that imposing the fee schedule as of August 1, 2001, which followed approval by the Amex Board of Governors on July 25, 2001, is reasonable and appropriate to fund enhancements that benefit all Floor constituencies, including specialists, Options Principal Members, Limited Trading Permit Holders, Associate Members, and employees of member firms on the Floor.

Furthermore, the Exchange proposes to apply the license fees for NDX, MNX and OEF options as of October 1, 2001 because trading in these options on the Exchange began in October 2001. The Exchange notes that, because these fees are transaction based, they would apply only after trading actually began in October. (NDX and MNX began trading on October 12 and OEF began trading and October 11.) The Exchange proposes to eliminate the options fee cap as October 1, 2001 to further reduce Exchange subsidy of facilities and services on the Floor, as discussed above, and because Exchange billing procedures cannot readily accommodate elimination of the fee cap prior to October 1, 2001.

In conclusion, the Exchange states that the increase in options transactions charges is necessitated by the large and increasing costs incurred by the Exchange in implementing options trading technology. Exchange billing of such fees as of August 1, 2001 (for Floor Fees, Member Fees and Options Fees) and October 1, 2001 (for the License Fee and elimination of options fee cap) will assist in compensating the Exchange for costs incurred by the Exchange in delivering specified services to members and for providing options trading technology.

[6] 15 U.S.C. 78(b)(3)(a).

(2) Statutory Basis

The Exchange believes that the proposed rule change is consistent with section 6(b) of the Act[7] in general and furthers the objectives of section 6(b)(4)[8] in particular in that it is designed to provide for the equitable allocation of reasonable dues, fees, and other charges among its members and issuers and other persons using its facilities.

B. Self-Regulatory Organization's Statement on Burden on Competition

The Exchange does not believe that the proposed rule change will impose any burden on competition.

C. Self-Regulatory Organization's Statement on Comments on the Proposed Rule Change Received From Members, Participants, or Others

No written comments were solicited or received with respect to the proposed rule change.

III. Date of Effectiveness of the Proposed Rule Change and Timing for Commission Action

Within 35 days of the date of publication of this notice in the **Federal Register** or within such longer period (i) as the Commission may designate up to 90 days of such date if it finds such longer period to be appropriate and publishes its reasons for so finding, or (ii) as to which the Exchange consents, the Commission will:

A. By order approve such proposed rule change; or

B. Institute proceedings to determine whether the proposed rule change should be disapproved.

IV. Solicitation of Comments

Interested persons are invited to submit written data, views and arguments concerning the foregoing, including whether the proposed rule change is consistent with the Act. Persons making written submissions should file six copies thereof with the Secretary, Securities and Exchange Commission, 450 Fifth Street, NW, Washington, DC 20549–0609. Copies of the submission, all subsequent amendments, all written statements with respect to the proposed rule change that are filed with the Commission, and all written communications relating to the proposed rule change between the Commission, and any person, other than those that may be withheld from the public in accordance with the provisions of 5 U.S.C. 552, will be available for inspection and copying in the Commission's Public Reference Room. Copies of such filing will also be available for inspection and copying at the principal office of the Amex. All submissions should refer to File No. SR–Amex–2001–102 and should be submitted by January 17, 2002.

[7] 15 U.S.C. 78f(b).

[8] 15 U.S.C. 78f(b)(4).

For the Commission, by the Division of Market Regulation, pursuant to delegated authority.[9]

Margaret H. McFarland,

Deputy Secretary.

[FR Doc. 01–31741 Filed 12–26–01; 8:45 am]

BILLING CODE 8010–01–M

[9] 17 CFR 200.30–3(a)(12).

SECURITIES AND EXCHANGE COMMISSION

[Release No. 34–45163; File No. SR–Amex–2001–101]

Self-Regulatory Organizations; Notice of Filing and Immediate Effectiveness of Proposed Rule Change by the American Stock Exchange LLC Relating to an Increase in Floor, Membership and Options Trading Fees

December 18, 2001.

Pursuant to section 19(b)(1) of the Securities Exchange Act of 1934 (''Act''),[1] and rule 19b–4[2] thereunder, notice is hereby given that on November 30, 2001, the American Stock Exchange LLC (''Amex'' or ''Exchange'') filed with the Securities and Exchange Commission (the ''Commission'') the proposed rule change as described in Items, I, II, and III below, which Items have been prepared by the Exchange. The Commission is publishing this notice to solicit comments on the proposed rule change from interested persons.

I. Self-Regulatory Organization's Statement of the Terms of Substance of the Proposed Rule Change

The Exchange proposes to increase floor, membership and options trading fees as described herein.[3]

The text of the proposed rule change appears below. New text is in italics; deletions are in brackets.

Fee Schedule

I. Floor fees

[1] 15 U.S.C. 78s(b)(1).

[2] 17 CFR 240.19b–4.

[3] Under Amex-2001–102, the Exchange seeks to impose the floor, membership, options trading, and comparison and floor brokerage fees, as described in this current proposal, as of August 1, 2001. In addition, the Exchange proposes to impose the License Fees and the elimination of the fee cap for options, as described in this proposal, as of October 1, 2001. *See* Securities Exchange Act Release No. 45165 (December 18, 2001).

Type	Annual fee
Floor Fees:	
(payable monthly)	
Floor Clerk	$[300.00] *900.00 ($75/month).*
Floor Facility—Regular & Options	[1,400.00] *2400.00 ($200/month).*
Principal	
Floor Facility—Limited Trading Permit	[700.00] *2400.00 ($200/month).*
Floor Wire Privilege	[400.00] *800.00 ($66.67/month).*
Post Fee per Podium	750.00
Specialist Registration Fee	[400.00] *800.00 ($66.67/month).*
Technology	[1,200.00] *3000.00 ($250/month).*
No further change.	

II. Member Fees

Membership Dues	Annual fee
÷ Associate	$[750.00] *1500.00 ($125/month).*
÷ Options Principal (OPM)	[750.00] *1500.00 ($125/month).*
÷ Regular	[750.00] *1500.00 ($125/month).*
÷ Limited Trading Permit (LTP)	[750.00] *1500.00 ($125/month).*
No further changes.	

III. Options Fees

Type	Firm [2]	Specialist, market maker (ROTs)	Broker/dealer	Customer [3]
I. Options Transaction Fee [1] (per contract side)				
Equity Options	$0.19	$[0.17] *0.26*	$0.19	No Charge.
Index Options	0.11	[0.12] *0.21]*	0.11	$0.10.
II. Options Comparison Fee [1] (per contract side)				
Equity Options	$0.04	$[0.04] *0.05*	$0.04	No Charge.
Index Options	0.04	[0.04] *0.05*	0.04	$0.04.
III. Options Floor Brokerage Fee [1] (per contract side)				
Equity Options	$0.03	$[0.03] *0.05*	$0.03	No Charge.
Index Options	0.03	[0.03] *0.05*	0.03	0.03.
IV. Options Marketing Fee [4] (per contract side)				
Equity Options	No Charge	$0.40	No Charge	No Charge.
V Options Licensing Fee (per contract side)				
MNX, NDX and QQQ	*No Charge*	*$0.10*	*No Charge*	*No Charge.*
OEF	*No Charge*	*0.05*	*No Charge*	*No Charge.*

Notes:

[1] *The increase of $0.09 in transaction fees, of $0.01 in comparison fees, and of $0.02 floor brokerage fees will only be imposed on the first 3,000 contracts executed for the accounts of specialists, registered options traders, and non-member broker dealers as either an accommodation trade (also known as ''Cabinet Trades'') or part of the following strategies: (a) reversal and conversions; (b) dividend spreads; and (c) box spreads. A Fee Reimbursement Form must be submitted to the Exchange in order to receive a reimbursement of the fee increases charged on contracts in excess of 3,000.*

[There is a cap on the number of options contracts per trade subject to Exchange options charges. Options charges will be imposed on member firm proprietary, specialist, market maker and non-member broker/dealer trades for the first 3,000 contracts. The caps will apply to all three options charge—transaction, comparison, and floor brokerage—and will apply to one day's trades of 100 or more contracts per execution on one side of any series executed by one specialist/trader/broker (for one member firm) and cleared by one clearing firm. The cap will also apply to trades of less than 100 contracts that are multiple per copy contract parties to trades of 100 or more contracts. The same fee schedule and cap provision will apply to LEAPS and FLEX options.]

[2] Customer facilitated orders will continue to be charged a transaction fee of $0.07 per contract side.

[3] Index Options machine delivered ≤ 30 contracts are not assessed a transaction fee.

[4] Excludes options trades between and among Registered Options Traders and Specialists.

II. Self-Regulatory Organization's Statement of the Purpose of, and Statutory Basis for, the Proposed Rule Change

In its filing with the Commission, the Exchange included statements concerning the purpose of and basis for the proposed rule change and discussed any comments it received on the proposed rule change. The text of these statements may be examined at the places specified in Item IV below. The Exchange has prepared summaries, set forth in sections A, B, and C below, of the most significant aspects of such statements.

A. Self-Regulatory Organization's Statement of the Purpose of, and Statutory Basis for, the Proposed Rule Change

(1) Purpose

The Exchange proposes to increase the following Exchange Floor fees:

(1) The Technology fee would be increased from $1200 to $3000 annually ($250 per month); (2) the Floor Facility fee would be increased from $1400 to $2400 annually ($200 per month) for Regular and Options Principal Members. This fee would also be increased from $700 to $2400 annually for holders of Limited Trading Permits; (3) the Floor Clerk fee would be increased from $300 to $900 annually ($75 per month); (4) the Specialist Registration fee would be increased from $400 to $800 annually ($66.67 per month); and (5) the Floor Wire Privilege fee would be increased from $400 to $800 annually ($66.67 per month).

A. Member Fees

Membership Dues would be increased from $750 to $1500 annually ($125 monthly) for all Regular Members, Options Principal Members, Associate Members and holders of Limited Trading Permits.

B. License Fees

In recent years, the Exchange has entered into license agreements with providers of indexes to use such indexes for the trading of options. In an effort to recoup some of the costs of these licenses, the Exchange proposes to establish a licensing fee for specialists and registered options traders. The fee, the amount of which may vary from product to product, would be collected on every transaction in the product in which the specialist or registered options trader is a party. Initially, the fees and products would be as follows: Options on the Nasdaq 100 Index Tracking Stock (symbol: QQQ), Nasdaq 100 Index (symbol: NDX) and Mini NDX (symbol: MNX)—$0.10 per contract side, and options on the S&P 100 iShares (symbol: OEF)—$0.05 per contract side.

C. Options Fees

Transaction, Comparison and Floor Brokerage Fees—For all specialists and registered options trader transactions in both equity and index options, the options fees would be increased as follows: (1) The Options Transaction fee per contract side is increased from $0.17 to $0.26 for equity options and from $0.12 to $0.21 for index options; (2) the options comparison fee is increased from $0.04 to $0.05 per contract side; and (3) the floor brokerage fee per contract side is increased from $0.03 to $0.05.

Elimination of Fee Cap—The Exchange states that currently all three types of options fees—transaction, comparison, and floor brokerage—are subject to a cap on the number of options contracts subject to the charges on a given day. The current cap is set at 3,000 contracts.

The Exchange proposes to eliminate the cap on orders executed for the accounts of specialists, registered options traders, and non-member broker dealers. Thus, transaction, comparison, and floor brokerage fees would apply to all option contracts executed for those accounts on a given day. Notwithstanding the foregoing, the Exchange has determined that accommodation trades (also known as ''Cabinet Trades'') [4] and trades occurring as part of certain types of strategies would be eligible for the cap on that portion of the transaction, option clearance, and floor brokerage fees that represent the increase in fees established in this filing. Thus, for contracts executed in excess of 3,000 on a given day, the transaction fee increase of $0.09, the options comparison fee increase of $0.01 and the floor brokerage fee increase of $0.02 would be reimbursed as set forth below. Transaction, options comparison, and floor brokerage fees would continue to be charged for only the first 3,000 contracts executed as an accommodation trade or pursuant to one of the following strategies: (1) Reversals and conversion; [5] (2) dividend spreads; [6] and (3) box spreads.[7] The Exchange states that its billing system is unable to distinguish among these types of transactions; therefore, a manual procedure has been developed. Specifically, within thirty calendar days of the particular transaction date, a Fee Reimbursement Form must be completed and submitted to the Exchange. Upon acceptance, the Exchange would delivery to that member's clearing firm a reimbursement check in the amount of the transaction, clearance, and brokerage fee increases (a total of $0.12) charged on contracts in excess of 3,000 executed pursuant to an accommodation trade or one of the strategies described above.

The Exchange states that the Floor and Member Fees would be increased in order to better align the Exchange's fees with the actual cost of delivering the specified services and to reduce Exchange subsidization of such services. The increase in options transactions charges would be necessitated by the large and increasing costs incurred by the Exchange in implementing options trading technology.

(2) Statutory Basis

The Exchange believes that the proposed rule change is consistent with Section 6(b) of the Act [8] in general and furthers the objectives of Section 6(b)(4) [9] in particular in that it is designed to provide for the equitable allocation of reasonable dues, fees, and other charges among its members and issuers and other persons using its facilities.

B. Self-Regulatory Organization's Statement on Burden on Competition

The Exchange does not believe that the proposed rule change will impose any burden on competition.

[4] *See* Annex Rule 959 for a description of an accommodation trade.

[5] The Exchange defines a ''conversion'' as a strategy in which a long put and a short call with the same strike price and expiration date are combined with long underlying stock to lock in a nearly riskless profit. A ''reversal'' is a strategy in which a short put and long call with the same strike price and expiration date are combined with short stock to lock in a nearly riskless profit.

[6] The Exchange defines a ''dividend spread'' as any trade done within a defined time frame in which a dividend arbitrage can be achieved between any two deep-in-money options.

[7] The Exchange defines a ''box spread'' as a spread strategy that involves a long call and short put at one strike price as well as a short call and long put at another strike price. This is a synthetic long stock position at one strike price and a synthetic short stock position at another strike price.

[8] 15 U.S.C. 78f(b).

[9] 15 U.S.C. 78f(b)(4).

C. Self-Regulatory Organization's Statement on Comments on the Proposed Rule Change Received From Members, Participants, or Others

No written comments were solicited or received with respect to the proposed rule change.

III. Date of Effectiveness of the Proposed Rule Change and Timing for Commission Action

The foregoing rule change has become effective pursuant to section 19(b)(3)(A)(ii) of the Act [10] and rule 19b–4(f)(2) [11] thereunder because it establishes or changes a due, fee, or charge imposed by the Exchange. At any time within 60 days of the filing of such proposed rule change, the Commission may summarily abrogate such rule change if it appears to the Commission that such action is necessary or appropriate in the public interest, for the protection of investors, or otherwise in furtherance of the purposes of the Act.

IV. Solicitation of Comments

Interested persons are invited to submit written data, views and arguments concerning the foregoing, including whether the proposed rule change is consistent with the Act. Persons making written submissions should file six copies thereof with the Secretary, Securities and Exchange Commission, 450 Fifth Street, NW., Washington, DC 20549–0609. Copies of the submission, all subsequent amendments, all written statements with respect to the proposed rule change that are filed with the Commission, and all written communications relating to the proposed rule change between the Commission and any person, other than those that may be withheld from the public in accordance with the provisions of 5 U.S.C. 552, will be available for inspection and copying in the Commission's Public Reference Room. Copies of such filing will also be available for inspection and copying at the principal office of the Amex. All submissions should refer to File No. SR–Amex–2001–101 and should be submitted by January 17, 2002.

For the Commission, by the Division of Market Regulation, pursuant to delegated authority.[12]

Margaret H. McFarland,

Deputy Secretary.

[FR Doc. 01–31743 Filed 12–26–01; 8:45 am]

BILLING CODE 8010–01–M

[10] 15 U.S.C. 78s(b)(3)(A)(ii).

[11] 17 CFR 240.19–4(f)(2).

[12] 17 CFR 200.30–3(a)(12).

DEPARTMENT OF STATE

Bureau of Political-Military Affairs

[Public Notice 3859]

60-Day Notice of Proposed Information Collections

In the matter of: Form DS–2032, Statement of Registration (OMB No. 1405–0002); Form DSP–5, Application/License for Permanent Export of Unclassified Defense Articles and Related Unclassified Technical Data (OMB No. 1405–0003); Form DSP–61, Application/License for Temporary Import of Unclassified Defense Articles (OMB No. 1405–0013); Form DSP–73, Application/License for Temporary Export of Unclassified Defense Articles (OMB No. 1405–0023); Form DSP–85, Application/License for Permanent/Temporary Export or Temporary Import of Classified Defense Articles and Classified Technical Data (OMB No. 1405–0022); Form DSP–83, Non-Transfer and Use Certificate (OMB No. 1405-0021); Statement of Political Contributions, Fees, or Commissions in Connection with the Sale of Defense Articles or Services (OMB No. 1405–0025); Form DSP–119, Application for Amendment to License for Export or Import of Classified or Unclassified Defense Articles and Related Technical Data (OMB No. 1405–0092); Form DSP–94, Authority To Export Defense Articles and Services Sold under the Foreign Military Sales (FMS) Program (OMB No. 1405–0051); Request for Approval of Manufacturing License Agreements, Technical Assistance Agreements, and Other Agreements (OMB No. 1405–0093); Maintenance of Records by Registrants (OMB No. 1405–0111); Prior Approval for Brokering Activity (New Collection); and Brokering Activity Reports (New Collection)

ACTION: 60-day notice of proposed information collections.

SUMMARY: The Department of State is seeking Office of Management and Budget (OMB) approval for the information collection described below. The purpose of this notice is to allow 60 days for public comment in the **Federal Register** preceding submission to OMB. This process is conducted in accordance with the Paperwork Reduction Act of 1995.

The following summarizes the information collection proposals submitted to OMB:

Type of Request: Extension of Currently Approved Collection Without Change.

Originating Office: Bureau of Political-Military Affairs, Office of Defense Trade Controls, PM/DTC.

Title of Information Collection: Statement of Registration.

Frequency: Every one to four years.

Form Number: DS–2032.

Respondents: Business and non-profit organizations.

Estimated Number of Respondents: 5,000.

Average Hours Per Response: 2 hours.

Total Estimated Burden: 10,000 hours.

(Total Estimated Burden based on number of forms received per year.)

Type of Request: Extension of Currently Approved Collection Without Change.

Originating Office: Bureau of Political-Military Affairs, Office of Defense Trade Controls, PM/DTC.

Title of Information Collection: Application/License for Permanent Export of Unclassified Defense Articles and Related Unclassified Technical Data.

Frequency: On occasion.

Form Number: DSP–5.

Respondents: Business and non-profit organizations.

Estimated Number of Respondents: 5,000.

Average Hours Per Response: 1 hour.

Total Estimated Burden: 30,000 hours.

(Total Estimated Burden based on number of forms received per year.)

Type of Request: Extension of Currently Approved Collection Without Change.

Originating Office: Bureau of Political-Military Affairs, Office of Defense Trade Controls, PM/DTC.

Title of Information Collection: Application/License for Temporary Import of Unclassified Defense Articles.

Frequency: On occasion.

Form Number: DSP–61.

Respondents: Business and non-profit organizations.

Estimated Number of Respondents: 4,500.

Average Hours Per Response: 30 minutes.

Total Estimated Burden: 4,500 hours.

(Total Estimated Burden based on number of forms received per year.)

Type of Request: Extension of Currently Approved Collection Without Change.

Originating Office: Bureau of Political-Military Affairs, Office of Defense Trade Controls, PM/DTC.

Title of Information Collection: Application/License for Temporary Export of Unclassified Defense Articles.

Frequency: On occasion.

Form Number: DSP–73.

Respondents: Business and non-profit organizations.

Estimated Number of Respondents: 5,000.

Average Hours Per Response: 1 hour.

Total Estimated Burden: 2,500 hours.

(Total Estimated Burden based on number of forms received per year.)

Type of Request: Extension of Currently Approved Collection Without Change.

Originating Office: Bureau of Political-Military Affairs, Office of Defense Trade Controls, PM/DTC.

Title of Information Collection: Application/License for Permanent/Temporary Export or Temporary Import of Classified Defense Articles and Classified Technical Data.

Frequency: On occasion.

Form Number: DSP–85.

Respondents: Business and non-profit organizations.

Estimated Number of Respondents: 1,000.

Average Hours Per Response: 1 hour.

Total Estimated Burden: 250 hours.

(Total Estimated Burden based on number of forms received per year.)

Type of Request: Extension of Currently Approved Collection Without Change.

Originating Office: Bureau of Political-Military Affairs, Office of Defense Trade Controls, PM/DTC.

Title of Information Collection: Non-Transfer and Use Certificate.

Frequency: On occasion.

Form Number: DSP–83.

Respondents: Business and non-profit organizations.

Estimated Number of Respondents: 4,500.

Average Hours Per Response: 1 hour.

Total Estimated Burden: 17,000 hours.

(Total Estimated Burden based on number of forms received per year.)

Type of Request: Extension of Currently Approved Collection Without Change.

Originating Office: Bureau of Political-Military Affairs, Office of Defense Trade Controls, PM/DTC.

Title of Information Collection: Statement of Political Contributions, Fees, or Commissions in Connection with the Sale of Defense Articles or Services.

Frequency: On occasion.

Form Number: none.

Respondents: Business organizations.

Estimated Number of Respondents: 4,500.

Average Hours Per Response: 1 hour.

Total Estimated Burden: 12,000 hours.

(Total Estimated Burden based on number of forms received per year.)

Type of Request: Extension of Currently Approved Collection Without Change.

Originating Office: Bureau of Political-Military Affairs, Office of Defense Trade Controls, PM/DTC.

Title of Information Collection: Application for Amendment to License for Export or Import of Classified or Unclassified Defense Articles and Related Technical Data.

Frequency: On occasion.

Form Number: DSP–119.

Respondents: Business and non-profit organizations.

Estimated Number of Respondents: 5,000.

Average Hours Per Response: 30 minutes.

Total Estimated Burden: 4,500 hours.

(Total Estimated Burden based on number of forms received per year.)

Type of Request: Extension of Currently Approved Collection Without Change.

Originating Office: Bureau of Political-Military Affairs, Office of Defense Trade Controls, PM/DTC.

Title of Information Collection: Authority to Export Defense Articles and Services Sold under the Foreign Military Sales (FMS) Program.

Frequency: On occasion.

Form Number: DSP–94.

Respondents: Business and foreign government representatives.

Estimated Number of Respondents: 4,500.

Average Hours Per Response: 30 minutes.

Total Estimated Burden: 1,250 hours.

(Total Estimated Burden based on number of forms received per year.)

Type of Request: Extension of Currently Approved Collection Without Change.

Originating Office: Bureau of Political-Military Affairs, Office of Defense Trade Controls, PM/DTC.

Title of Information Collection: Request for Approval of Manufacturing License Agreements, Technical Assistance Agreements, and Other Agreements.

Frequency: On occasion.

Form Number: none.

Respondents: Business organizations.

Estimated Number of Respondents: 5,000.

Average Hours Per Response: 2 hours.

Total Estimated Burden: 10,000 hours.

(Total Estimated Burden based on number of forms received per year.)

Type of Request: Extension of Currently Approved Collection Without Change.

Originating Office: Bureau of Political-Military Affairs, Office of Defense Trade Controls, PM/DTC.

Title of Information Collection: Maintenance of Records by Registrants.

Frequency: On occasion.

Form Number: none.

Respondents: Business organizations.

Estimated Number of Respondents: 5,000.

Average Hours Per Response: 20 hours per year.

Total Estimated Burden: 100,000 hours.

Type of Request: New Collection.

Originating Office: Bureau of Political-Military Affairs, Office of Defense Trade Controls, PM/DTC.

Title of Information Collection: Prior Approval for Brokering Activity.

Frequency: On occasion.

Form Number: none.

Respondents: Business organizations.

Estimated Number of Respondents: 200.

Average Hours Per Response: 2 hours.

Total Estimated Burden: 60 hours.

(Total Estimated Burden based on number of requests received per year.)

Type of Request: New Collection.

Originating Office: Bureau of Political-Military Affairs, Office of Defense Trade Controls, PM/DTC.

Title of Information Collection: Brokering Activity Reports.

Frequency: Annual.

Form Number: none.

Respondents: Business organizations.

Estimated Number of Respondents: 200.

Average Hours Per Response: 2 hours.

Total Estimated Burden: 4,000 hours.

(Total Estimated Burden based on number of forms received per year.)

Public comments are being solicited to permit the agency to:

- Evaluate whether the proposed information collection is necessary for the proper performance of the functions of the agency.
- Evaluate the accuracy of the agency's estimate of the burden of the proposed collection, including the validity of the methodology and assumptions used.
- Enhance the quality, utility, and clarity of the information to be collected.
- Minimize the reporting burden on those who are to respond, including through the use of automated collection techniques or other forms of technology.

For Additional Information: Public comments, or requests for additional information, regarding the collection listed in this notice should be directed to William J. Lowell, Director, Office of Defense Trade Controls, Bureau of Political-Military Affairs, SA–1, Room 13th Floor, H1304, 2401 E Street, NW., Washington, DC 20037 (202) 663–7000.

Dated: November 19, 2001.

Robert W. Maggi,

Acting Deputy Assistant Secretary for Security Operations, Bureau of Political-Military Affairs, U.S. Department of State.

[FR Doc. 01–31809 Filed 12–26–01; 8:45 am]

BILLING CODE 4710–25–P

DEPARTMENT OF STATE

[Public Notice 3861]

Culturally Significant Objects Imported for Exhibition Determinations: ''Cosme Tura: Painting and Design in Renaissance Ferrara''

DEPARTMENT: United States Department of State.

ACTION: Notice.

SUMMARY: Notice is hereby given of the following determinations: Pursuant to the authority vested in me by the Act of October 19, 1965 [79 Stat. 985; 22 U.S.C. 2459], Executive Order 12047 of March 27, 1978, the Foreign Affairs Reform and Restructuring Act of 1998 [112 Stat. 2681, *et seq.*; 22 U.S.C. 6501 note, *et seq.*], Delegation of Authority No. 234 of October 1, 1999 [64 FR 56014], and Delegation of Authority No. 236 of October 19, 1999 [64 FR 57920], as amended, I hereby determine that the objects to be included in the exhibition, ''Cosme Tura: Painting and Design in Renaissance Ferrara'' imported from abroad for temporary exhibition within the United States, are of cultural significance. These objects are imported pursuant to loan agreements with the foreign lenders. I also determine that the exhibition or display of the exhibit objects at the Isabella Stewart Gardner Museum, Boston, Massachusetts, from on or about January 30, 2002, to on or about May 12, 2002, and at possible additional venues yet to be determined, is in the national interest. Public Notice of these determinations is ordered to be published in the **Federal Register**.

FOR FURTHER INFORMATION CONTACT: For further information, including a list of exhibit objects, contact Paul W. Manning, Attorney-Adviser, Office of the Legal Adviser, 202/619–5997, and the address is United States Department of State, SA–44, Room 700, 301 4th Street, SW., Washington, DC 20547–0001.

Dated: December 19, 2001.

Patricia S. Harrison,

Assistant Secretary for Educational and Cultural Affairs, United States Department of State.

[FR Doc. 01–31810 Filed 12–26–01; 8:45 am]

BILLING CODE 4710–08–P

DEPARTMENT OF STATE

[Public Notice 3863]

Culturally Significant Objects Imported for Exhibition; Determinations: ''Goya: Images of Women''

AGENCY: United States Department of State.

ACTION: Notice.

SUMMARY: Notice is hereby given of the following determinations: Pursuant to the authority vested in me by the Act of October 19, 1965 (79 Stat. 985; 22 U.S.C. 2459), Executive Order 12047 of March 27, 1978, the Foreign Affairs Reform and Restructuring Act of 1998 (112 Stat. 2681, *et seq.*; 22 U.S.C. 6501 note, *et seq.*), Delegation of Authority No. 234 of October 1, 1999, and Delegation of Authority No. 236 of October 19, 1999, as amended, I hereby determine that the objects to be included in the exhibition ''Goya: Images of Women,'' imported from abroad for temporary exhibition within the United States, are of cultural significance. The objects are imported pursuant to loan agreements with the foreign owners. I also determine that the exhibition or display of the exhibit objects at The National Gallery of Art, Washington, DC, from on or about March 10, 2002, to on or about June 2, 2002, and at possible additional venues yet to be determined, is in the national interest. Public Notice of these Determinations is ordered to be published in the **Federal Register**.

FOR FURTHER INFORMATION CONTACT: For further information, including a list of the exhibit objects, contact Julianne Simpson, Attorney-Adviser, Office of the Legal Adviser, U.S. Department of State, (telephone: 202/619–6529). The address is U.S. Department of State, SA–44, 301 4th Street, SW., Room 700, Washington, DC 20547–0001.

Dated: December 19, 2001.

Patricia S. Harrison,

Assistant Secretary for Educational and Cultural Affairs, United States Department of State.

[FR Doc. 01–31812 Filed 12–26–01; 8:45 am]

BILLING CODE 4710–08–P

DEPARTMENT OF STATE

[Public Notice 3862]

Culturally Significant Objects Imported for Exhibition Determinations: ''Surrealism: Desire Unbound''

DEPARTMENT: United States Department of State.

ACTION: Notice.

SUMMARY: Notice is hereby given of the following determinations: Pursuant to the authority vested in me by the Act of October 19, 1965 [79 Stat. 985; 22 U.S.C. 2459], Executive Order 12047 of March 27, 1978, the Foreign Affairs Reform and Restructuring Act of 1998 [112 Stat. 2681, *et seq.*; 22 U.S.C. 6501 note, *et seq.*], Delegation of Authority No. 234 of October 1, 1999 [64 FR 56014], and Delegation of Authority No. 236 of October 19, 1999 [64 FR 57920], as amended, I hereby determine that the objects to be included in the exhibition, ''Surrealism: Desire Unbound,'' imported from abroad for temporary exhibition within the United States, are of cultural significance. These objects are imported pursuant to loan agreements with the foreign lenders. I also determine that the exhibition or display of the exhibit objects at the Metropolitan Museum of Art, New York, New York, from on or about February 4, 2002, to on or about May 12, 2002, and at possible additional venues yet to be determined, is in the national interest. Public Notice of these determinations is ordered to be published in the **Federal Register**.

FOR FURTHER INFORMATION CONTACT: For further information, including a list of exhibit objects, contact Paul W. Manning, Attorney-Adviser, Office of the Legal Adviser, 202/619–5997, and the address is United States Department of State, SA–44, Room 700, 301 4th Street, SW., Washington, DC 20547–0001.

Dated: December 19, 2001.

Patricia S. Harrison,

Assistant Secretary for Educational and Cultural Affairs, United States Department of State.

[FR Doc. 01–31811 Filed 12–26–01; 8:45 am]

BILLING CODE 4710–08–P

OFFICE OF THE UNITED STATES TRADE REPRESENTATIVE

Request for Comments Concerning Compliance With Telecommunications Trade Agreements

AGENCY: Office of the United States Trade Representative

ACTION: Request for written submissions from the public.

SUMMARY: Pursuant to section 1377 of the Omnibus Trade and Competitiveness Act of 1988 (19 U.S.C. 3106) (''Section 1377''), the Office of the United States Trade Representative (''USTR'') requests comments on: the operation and effectiveness of the World Trade Organization (''WTO'') Basic

Telecommunications Agreement; the telecommunications provisions of the North American Free Trade Agreement (''NAFTA''); and, other telecommunications trade agreements in force with respect to the United States, including those with the Asia Pacific Economic Cooperation (''APEC'') members, the European Union (''EU''), the Inter-American Telecommunications Commission (''CITEL''), Japan, Korea, Mexico and Taiwan. The USTR will conclude the review by March 31, 2002.

DATES: Submissions must be received by 12 noon on January 28, 2002.

ADDRESSES: Gloria Blue, Executive Secretary, Trade Policy Staff Committee, ATTN: Section 1377 Comments, Office of the United States Trade Representative, 600 17th Street, NW, Washington, DC 20508

FOR FURTHER INFORMATION CONTACT: Kenneth Schagrin, Office of Industry and Telecommunications (202) 395–5663; or Demetrios Marantis, Office of the General Counsel (202) 395–7305.

SUPPLEMENTARY INFORMATION: Section 1377 requires the USTR to review annually the operation and effectiveness of all U.S. trade agreements regarding telecommunications products and services of the United States that are in force with respect to the United States. The purpose of the review is to determine whether any act, policy, or practice of an economy that has entered into a telecommunications trade agreement with the United States is inconsistent with the terms of such agreement, or otherwise denies to U.S. firms, within the context of the terms of such agreements, mutually advantageous market opportunities. For the current review, the USTR seeks comments on whether:

(1) any WTO Member is acting inconsistently with commitments under the WTO Basic Telecommunications Agreement (including the WTO Reference Paper) or with other WTO obligations (including the Annex on Telecommunications), in a manner that affects market opportunities for U.S. telecommunications products and services;

(2) Canada or Mexico has failed to comply with NAFTA telecommunications commitments (including under Chapters 11, 12, and 13 of that agreement);

(3) APEC or CITEL members, the EU, Japan, Korea, Mexico or Taiwan have failed to abide by commitments under additional telecommunications agreements with the United States.[1]

(4) outstanding issues remains from the 2000–2001 review conducted under Section 1377.[2]

For further details on these agreements, please see 63 FR 1140 (January 8, 1998).

Public Comment: Requirements for Submissions

The USTR invites submissions concerning the operation and effectiveness of the WTO Basic Telecommunications Agreement; the NAFTA; and other telecommunications trade agreements in force with respect to the United States, including those with APEC members, CITEL members, the EU, Japan, Korea, Mexico and Taiwan.

Interested persons must provide fifteen copies of any submission, in English, to Gloria Blue, Office of the United States Trade Representative, by noon on January 23, 2002. Interested parties must also identify on the first page of the comments the telecommunications trade agreement(s) discussed therein.

All comments will be placed in the USTR Reading Room for inspection shortly after the filing deadline, except business confidential information exempt from public inspection in accordance with 15 CFR 2003.6. Confidential information submitted in accordance with 15 CFR 2003.6, must be clearly marked ''BUSINESS CONFIDENTIAL'' in a contrasting color ink at the top of each page on each of 15 copies, and must be accompanied by 15 copies of a non-confidential summary of the confidential information. The non-confidential summary will be placed in the USTR Public Reading Room.

An appointment to review the comments may be made by calling Brenda Webb at (202) 395–6186. The USTR Reading Room is open to the public from 9:30 a.m. to 12 noon, and from 1 p.m. to 4 p.m., Monday through Friday, and is located in Room 3 of 1724 F Street, N.W.

Carmen Suro-Bredie,

Chair, Trade Policy Staff Committee.

[FR Doc. 01–31795 Filed 12–26–01; 8:45 am]

BILLING CODE 3190–01–P

[1] These agreements include:

• Mutual Recognition Agreements for conformity assessment of telecommunications equipment with the EU (1997), APEC countries (1998), and CITEL countries (1999) and

• Bilateral Agreements with:

Japan: on Nippon Telegraph and Telephone procurement (1999); public sector procurement of telecommunications products and services (1994); international value-added network services (1990–91); open government procurement of all satellites, except for government research and development satellites (1990); network channel terminating equipment (1990); and cellular and third-party radio systems (1989) and cellular radio systems (1994);

Korea: on type approval of telecommunications equipment (1992/1996), transparent standard-setting processes (1992/1997), and non-discriminatory access to Korea Telecommunication's procurement of telecommunications products (1992/1996);

Mexico: on test data acceptance agreements between product safety testing laboratories (1997); and

Taiwan: interconnection pricing for provision of wireless services (1998) and, licensing and provision of wireless services through the establishment of a competitive, transparent and fair wireless market (1996).

[2] See USTR Press Release 01–20 (available at *www.ustr.gov*) for detailed information of the results of the 2000–2001 Section 1377 review, which considered practices of Colombia, Mexico, Japan, South Africa, and Taiwan as well as five EU Member States (France, Germany, Italy, Spain, the United Kingdom).

DEPARTMENT OF TRANSPORTATION

Office of the Secreatry

Aviation Proceedings, Agreements Filed During the Week Ending December 7, 2001

The following Agreements were filed with the Department of Transportation under provisions of 49 U.S.C. sections 412 and 414. Answers may be filed within 21 days after the filing of the applications.

Docket Number: OST–2001–11085.
Date Filed: December 3, 2001.
Parties: Members of the International Air Transport Association.
Subject:
PTC COMP 0881 dated 4 December 2001
Mail Vote 184 Resolution 010p
TC2/12/23/123 Special Passenger Amending Resolution from Lithuania.
Intended effective date: 1 February 2002.

Docket Number: OST–2001–11124.
Date Filed: December 7, 2001.
Parties: Members of the International Air Transport Association.
Subject:
TC23/TC123 Africa—TC3
Africa-South Asian Subcontinent, Africa-South West Pacific
Mail Vote 180—Africa-South East Asia
Mail Vote 181—Africa-Japan/Korea
PTC23 AFR–TC3 0141 dated 2 November 2001
Africa-South Asian Subcontinent Resolutions r1–r12
PTC23 AFR–TC3 0142 dated 2 November 2001
Africa-South West Pacific Resolutions r13–r24
PTC23 AFR–TC3 0138 dated 29 October 2001
Africa-South East Pacific Resolutions r25–r36

PTC23 AFR–TC3 0149 dated 23 November 2001 (Affirmative)
PTC23 AFR–TC3 0152 dated 30 November 2001
Africa-Japan/Korea Resolutions r37–r59
MINUTES—PTC23 AFR–TC3 0146 dated 13 November 2001
TABLES—PTC23 AFR–TC3 Fares 0065 dated 13 November 2001
PTC23 AFR–TC3 Fares 0066 dated 13 November 2001
PTC23 AFR–TC3 Fares 0069 dated 23 November 2001
PTC23 AFR–TC3 Fares 0070 dated 7 December 2001.

Intended effective date: 1 April 2002.

Dorothy Y. Beard,

Federal Register Liaison.

[FR Doc. 01–31718 Filed 12–26–01; 8:45 am]

BILLING CODE 4910–62–P

DEPARTMENT OF TRANSPORTATION

Office of the Secretary

Notice of Applications for Certificates of Public Convenience and Necessity and Foreign Air Carrier Permits Filed Under Subpart B (formerly Subpart Q) During the Week Ending December 7, 2001

The following applications for certificates of public convenience and necessity and foreign air carrier permits were filed under Subpart B (formerly Subpart Q) of the Department of Transportation's procedural regulations (See 14 CFR 301.201 *et seq.*). The due date for answers, conforming applications, or motions to modify scope are set forth below for each application. Following the Answer period, DOT may process the application by expedited procedures. Such procedures may consist of the adoption of a show-cause order, a tentative order, or in appropriate cases a final order without further proceedings.

Docket Number: OST–2001–11092.

Date Filed: December 4, 2001.

Due Date for Answers, Conforming Applications, or Motion to Modify Scope: December 26, 2001.

Description: Application of Northwest Airlines, Inc., pursuant to 49 U.S.C. sections 41108, 41102 and subpart B, requesting the issuance of a certificate of public convenience and necessity authorizing it to engage in the scheduled foreign air transportation of persons, property and mail between a point or points in the United States via intermediate points to a point or points in Poland and beyond. Northwest also requests that the Department integrate this certificate authority with all of Northwest's existing certificate and exemption authority to the extent consistent with U.S. bilateral agreements and DOT policy.

Dorothy Y. Beard,

Federal Register Liaison.

[FR Doc. 01–31719 Filed 12–26–01; 8:45 am]

BILLING CODE 4910–62–P

DEPARTMENT OF TRANSPORTATION

Federal Aviation Administration

Agency Information Collection Activity Under OMB Review

AGENCY: Federal Aviation Administration (FAA), DOT.

ACTION: Notice.

SUMMARY: In compliance with the Paperwork Reduction Act of 1995 (44 U.S.C. 3501 *et seq.*), this notice announces that the Information Collection Request (ICR) abstracted below has been forwarded to the Office of Management and Budget (OMB) for extension of the currently approved collection. The ICR describes the nature of the information collection and the expected burden. The **Federal Register** Notice with a 60-day comment period soliciting comments on the following collection of information was published on September 24, 2001, pages 48899 and 48900.

DATES: Comments must be submitted on or before January 28, 2002. A comment to OMB is most effective if OMB receives it within 30 days of publication.

FOR FURTHER INFORMATION CONTACT: Judy Street on (202) 267–9895.

SUPPLEMENTARY INFORMATION:

Federal Aviation Administration (FAA)

Title: Flight Data Recorder Resolution Requirements.

Type of Request: Extension of a currently approved collection.

OMB Control Number: 2120–0669.

Forms(s): NA.

Affected Public: A total of 50 air carriers and individual aircraft operators.

Abstract: The FAA has issued a special aviation regulation that will provide relief from the flight data recorder requirements of 14 CFR 121.344 and will request information from airplane operators on which and how many planes are not in compliance. The information will be used by the FAA to track compliance with the underlying regulation, and to determine who will be affected by any subsequent FAA action to resolve the problems described by the manufacturer.

Estimated Annual Burden Hours: An estimated 67 hours annually.

ADDRESSES: Send comments to the Office of Information and Regulatory Affairs, Office of Management and Budget, 725 17th Street, NW, Washington, DC 20503, Attention FAA Desk Officer.

Comments are invited on: Whether the proposed collection of information is necessary for the proper performance of the functions of the Department, including whether the information will have practical utility; the accuracy of the Department's estimates of the burden of the proposed information collection; ways to enhance the quality, utility and clarity of the information to be collected; and ways to minimize the burden of the collection of information on respondents, including the use of automated collection techniques or other forms of information technology.

Issues in Washington, DC, on December 19, 2001.

Steve Hopkins,

Manager, Standards and Information Division, APF–100.

[FR Doc. 01–31729 Filed 12–26–01; 8:45 am]

BILLING CODE 4910–13–M

DEPARTMENT OF TRANSPORTATION

Federal Aviation Administration

Agency Information Collection Activity Under OMB Review

AGENCY: Federal Aviation Administration (FAA), DOT.

ACTION: Notice.

SUMMARY: In compliance with the Paperwork Reduction Act of 1995 (44 U.S.C. 3501 *et seq.*), this notice announces that the Information Collection Request (ICR) abstracted below has been forwarded to the Office of Management and Budget (OMB) for extension of the currently approved collection. The ICR describes the nature of the information collection and the expected burden. The **Federal Register** Notice with a 60-day comment period soliciting comments on the following collection of information was published on September 24, 2001, pages 48899 and 48900.

DATES: Comments must be submitted on or before January 28, 2002. A comment to OMB is most effective if OMB receives it within 30 days of publication.

FOR FURTHER INFORMATION CONTACT: Judy Street on (202) 267–9895.

SUPPLEMENTARY INFORMATION:

Federal Aviation Administration (FAA)

Title: General Operating and Flight Rules—14 CFR part 91.

Type of Request: Extension of a currently approved collection.

OMB Control Number: 2120–0005.

Forms(s): NA.

Affected Public: A total of 21,197 individual airmen, state & local governments, and businesses.

Abstract: Part A of Subtitle VII of the Revised Title 49 United States Code authorizes the issuance of regulations governing the use of navigable space. 14 CFR part 91 prescribes regulations governing the general operation and flight of aircraft. The multi-recordkeeping and information collection activities imposed by this regulation are required to determine compliance. Respondents are individual airmen, state or local governments, and businesses.

Estimated Annual Burden Hours: An estimated 231,064 hours annually.

ADDRESSES: Send comments to the Office of Information and Regulatory Affairs, Office of Management and Budget, 725 17th Street, NW, Washington, DC 20503, Attention FAA Desk Officer.

Comments are invited on: Whether the proposed collection of information is necessary for the proper performance of the functions of the Department, including whether the information will have practical utility; the accuracy of the Department's estimates of the burden of the proposed information collection; ways to enhance the quality, utility and clarity of the information to be collected; and ways to minimize the burden of the collection of information on respondents, including the use of automated collection techniques or other forms of information technology.

Issued in Washington, DC, on December 17, 2001.

Steve Hopkins,

Manager, Standards and Information Division, APF–100.

[FR Doc. 01–31730 Filed 12–26–01; 8:45 am]

BILLING CODE 4910–13–M

DEPARTMENT OF TRANSPORTATION

Federal Aviation Administration

Research, Engineering and Development (R,E&D) Advisory Committee

AGENCY: Federal Aviation Administration, Department of Transportation.

ACTION: Notice of meeting.

Pursuant to section 10(A)(2) of the Federal Advisory Committee Act (Public Law 92–463; 5 U.S.C. App. 2), notice is hereby given of a meeting of the FAA Research, Engineering and Development Advisory Committee (REDAC).

Name: Research, Engineering & Development Advisory Committee.

Time and Date: January 16, 2002—9 a.m.–5 p.m.

Place: Holiday Inn Rosslyn Westpark Hotel, 1900 North Fort Myer Drive, Arlington, Virginia 22209.

Purpose: On January 16 the R,E&D Advisory Committee will meet to review a report prepared by the Ad Hoc Security Subcommittee on aviation security. As a result of the tragic events of September 11, 2001, Administrator Jane Garvey reconstituted the Subcommittee on Aviation Security into an Ad Hoc Security Subcommittee to evaluate security related research ideas capabilities resulting from the thousands of solicited and unsolicited recommendations on how to mitigate attempted acts of terrorism received by FAA. These recommendations came from private enterprises, universities, other government agencies, private consultants, citizens and elements within FAA. The AD Hoc Security Subcommittee is comprised of the REDAC Security Subcommittee members, Chairs of the other REDAC subcommittees, four Aviation Security Advisory Committee (ASAC) members, and selected DOD and Boeing representatives.

Attendance is open to the interested public but limited to space available. Persons wishing to attend the meeting or obtain information should contact Gloria Dunderman at the Federal Aviation Administration, AAR–200, 800 Independence Avenue, SW, Washington, DC 20591 (202) 267–8937.

Members of the public may present a written statement to the Committee at any time.

Issued in Washington, DC on December 18, 2001.

Herman A. Rediess,

Director, Office of Aviation Research.

[FR Doc. 01–31728 Filed 12–26–01; 8:45 am]

BILLING CODE 4910–13–M

DEPARTMENT OF TRANSPORTATION

Federal Motor Carrier Safety Administration

[Docket No. FMCSA–2001–10578]

Qualification of Drivers; Exemption Applications; Vision

AGENCY: Federal Motor Carrier Safety Administration (FMCSA), DOT.

ACTION: Notice of final disposition.

SUMMARY: The FMCSA announces its decision to exempt 37 individuals from the vision requirement in 49 CFR 391.41(b)(10).

DATES: December 27, 2001.

FOR FURTHER INFORMATION CONTACT: For information about the vision exemptions in this notice, Ms. Sandra Zywokarte, Office of Bus and Truck Standards and Operations, (202) 366–2987; for information about legal issues related to this notice, Mr. Joseph Solomey, Office of the Chief Counsel, (202) 366–1374, FMCSA, Department of Transportation, 400 Seventh Street, SW., Washington, DC 20590. Office hours are from 7:45 a.m. to 4:15 p.m., e.t., Monday through Friday, except Federal holidays.

SUPPLEMENTARY INFORMATION:

Electronic Access

You may see all the comments online through the Document Management System (DMS) at: *http://dmses.dot.gov.*

Background

Thirty-seven individuals petitioned the FMCSA for an exemption from the vision requirement in 49 CFR 391.41(b)(10), which applies to drivers of commercial motor vehicles (CMVs) in interstate commerce. They are: Loa M. Boggs, Anthony Brandano, Jerald D. Davis, Vernon J. Dohrn, Stanley E. Elliott, Elmer E. Gockley, Paul C. Gruenberg, Tommy D. Habben, Glenn T. Hehner, Carl R. Hunt, Shane M. Hunter, Thomas M. Ingebretsen, Lonnie M. Jones, Martin D. Keough, Ricky J. Knutson, Randall B. Laminack, Norman R. Lamy, James A. Lenhart, Dennis L. Lockhart, Sr., Jerry J. Lord, Raymond P. Madron, Ronald S. Mallory, Keith G. McCully, Ernest L. McLendon, Charles J. Morman, Eugene C. Murphy, Jack E. Potts, Jr., Bernard A. Ranly, John E. Rogstad, Jerry W. Russell, Stephen G. Sniffin, John R. Snyder, Darwin J. Thomas, Rene R. Trachsel, Stephen D. Vice, John H. Voigts, and Kendle F. Waggle, Jr.

Under 49 U.S.C. 31315 and 31136(e), the FMCSA may grant an exemption for a renewable 2-year period if it finds ''such exemption would likely achieve a level of safety that is equivalent to, or greater than, the level that would be achieved absent such exemption.'' Accordingly, the FMCSA has evaluated the 37 petitions on their merits and made a determination to grant the exemptions to all of them. On October 24, 2001, the agency published notice of its receipt of applications from these 37 individuals, and requested comments from the public (66 FR 53826). The comment period closed on November 23, 2001. Two comments were received, and their contents were carefully considered by the FMCSA in reaching the final decision to grant the petitions.

Vision And Driving Experience of the Applicants

The vision requirement provides:

A person is physically qualified to drive a commercial motor vehicle if that person has distant visual acuity of at least 20/40 (Snellen) in each eye without corrective lenses or visual acuity separately corrected to 20/40 (Snellen) or better with corrective lenses, distant binocular acuity of at least 20/40 (Snellen) in both eyes with or without corrective lenses, field of vision of at least 70° in the horizontal meridian in each eye, and the ability to recognize the colors of traffic signals and devices showing standard red, green, and amber. 49 CFR 391.41(b)(10)

Since 1992, the Federal Highway Administration (FHWA) has undertaken studies to determine if this vision standard should be amended. The final report from our medical panel recommends changing the field of vision standard from 70° to 120°, while leaving the visual acuity standard unchanged. (See Frank C. Berson, M.D., Mark C. Kuperwaser, M.D., Lloyd Paul Aiello, M.D., and James W. Rosenberg, M.D., ''Visual Requirements and Commercial Drivers,'' October 16, 1998, filed in the docket, FHWA–98–4334.) The panel's conclusion supports the FMCSA's (and previously the FHWA's) view that the present standard is reasonable and necessary as a general standard to ensure highway safety. The FMCSA also recognizes that some drivers do not meet the vision standard, but have adapted their driving to accommodate their vision limitation and demonstrated their ability to drive safely.

The 37 applicants fall into this category. They are unable to meet the vision standard in one eye for various reasons, including amblyopia, corneal and macular scars, and loss of an eye due to trauma. In most cases, their eye conditions were not recently developed. All but four of the applicants were either born with their vision impairments or have had them since childhood. The four individuals who sustained their vision conditions as adults have had them for periods ranging from 7 to 16 years.

Although each applicant has one eye which does not meet the vision standard in 49 CFR 391.41(b)(10), each has at least 20/40 corrected vision in the other eye and, in a doctor's opinion, has sufficient vision to perform all the tasks necessary to operate a CMV. The doctors' opinions are supported by the applicants' possession of valid commercial driver's licenses (CDLs) or non-CDLs to operate CMVs. Before issuing CDLs, States subject drivers to knowledge and performance tests designed to evaluate their qualifications to operate a CMV. All these applicants satisfied the testing standards for their State of residence. By meeting State licensing requirements, the applicants demonstrated their ability to operate a commercial vehicle, with their limited vision, to the satisfaction of the State. The Federal interstate qualification standards, however, require more.

While possessing a valid CDL or non-CDL, these 37 drivers have been authorized to drive a CMV in intrastate commerce, even though their vision disqualifies them from driving in interstate commerce. They have driven CMVs with their limited vision for careers ranging from 3 to 47 years. In the past 3 years, the 37 drivers had 4 convictions for traffic violations among them. Two of these convictions were for speeding. The other convictions consisted of: ''Drive and/or Pass on Shoulder''; and ''Failure to Yield Right of Way to Emergency Vehicle.'' None of the drivers was involved in an accident in a CMV.

The qualifications, experience, and medical condition of each applicant were stated and discussed in detail in an October 24, 2001, notice (66 FR 53826). Since there were no docket comments on the specific merits or qualifications of any applicant, we have not repeated the individual profiles here. Our summary analysis of the applicants as a group is supported by the information published at 66 FR 53826.

Basis for Exemption Determination

Under 49 U.S.C. 31315 and 31136(e), the FMCSA may grant an exemption from the vision standard in 49 CFR 391.41(b)(10) if the exemption is likely to achieve an equivalent or greater level of safety than would be achieved without the exemption. Without the exemption, applicants will continue to be restricted to intrastate driving. With the exemption, applicants can drive in interstate commerce. Thus, our analysis focuses on whether an equal or greater level of safety is likely to be achieved by permitting these drivers to drive in interstate commerce as opposed to restricting them to driving in intrastate commerce.

To evaluate the effect of these exemptions on safety, the FMCSA considered not only the medical reports about the applicants' vision, but also their driving records and experience with the vision deficiency. To qualify for an exemption from the vision standard, the FMCSA requires a person to present verifiable evidence that he or she has driven a commercial vehicle safely with the vision deficiency for 3 years. Recent driving performance is especially important in evaluating future safety, according to several research studies designed to correlate past and future driving performance. Results of these studies support the principle that the best predictor of future performance by a driver is his/her past record of accidents and traffic violations. Copies of the studies have been added to the docket. (FHWA–98–3637).

We believe we can properly apply the principle to monocular drivers, because data from the vision waiver program clearly demonstrate the driving performance of experienced monocular drivers in the program is better than that of all CMV drivers collectively. (See 61 FR 13338, 13345, March 26, 1996.) The fact that experienced monocular drivers with good driving records in the waiver program demonstrated their ability to drive safely supports a conclusion that other monocular drivers, meeting the same qualifying conditions as those required by the waiver program, are also likely to have adapted to their vision deficiency and will continue to operate safely.

The first major research correlating past and future performance was done in England by Greenwood and Yule in 1920. Subsequent studies, building on that model, concluded that accident rates for the same individual exposed to certain risks for two different time periods vary only slightly. (See Bates and Neyman, University of California Publications in Statistics, April 1952.) Other studies demonstrated theories of predicting accident proneness from accident history coupled with other factors. These factors—such as age, sex, geographic location, mileage driven and conviction history—are used every day by insurance companies and motor vehicle bureaus to predict the probability of an individual experiencing future accidents. (See Weber, Donald C., ''Accident Rate Potential: An Application of Multiple Regression Analysis of a Poisson Process,'' Journal of American Statistical Association, June 1971.) A 1964 California Driver Record Study prepared by the California Department of Motor Vehicles concluded that the best overall accident predictor for both concurrent and nonconcurrent events is the number of single convictions. This study used 3 consecutive years of data, comparing the experiences of drivers in the first 2 years with their experiences in the final year.

Applying principles from these studies to the past 3-year record of the 37 applicants receiving an exemption,

we note that cumulatively the applicants have had no accidents and only four traffic violations in the last 3 years. The applicants achieved this record of safety while driving with their vision impairment, demonstrating the likelihood that they have adapted their driving skills to accommodate their condition. As the applicants' ample driving histories with their vision deficiencies are good predictors of future performance, the FMCSA concludes their ability to drive safely can be projected into the future.

We believe the applicants' intrastate driving experience and history provide an adequate basis for predicting their ability to drive safely in interstate commerce. Intrastate driving, like interstate operations, involves substantial driving on highways on the interstate system and on other roads built to interstate standards. Moreover, driving in congested urban areas exposes the driver to more pedestrian and vehicular traffic than exists on interstate highways. Faster reaction to traffic and traffic signals is generally required because distances are more compact than on highways. These conditions tax visual capacity and driver response just as intensely as interstate driving conditions. The veteran drivers in this proceeding have operated CMVs safely under those conditions for at least 3 years, most for much longer. Their experience and driving records lead us to believe that each applicant is capable of operating in interstate commerce as safely as he or she has been performing in intrastate commerce. Consequently, the FMCSA finds that exempting these applicants from the vision standard in 49 CFR 391.41(b)(10) is likely to achieve a level of safety equal to that existing without the exemption. For this reason, the agency will grant the exemptions for the 2-year period allowed by 49 U.S.C. 31315 and 31136(e).

We recognize that the vision of an applicant may change and affect his/her ability to operate a commercial vehicle as safely as in the past. As a condition of the exemption, therefore, the FMCSA will impose requirements on the 37 individuals consistent with the grandfathering provisions applied to drivers who participated in the agency's vision waiver program.

Those requirements are found at 49 CFR 391.64(b) and include the following: (1) That each individual be physically examined every year (a) by an ophthalmologist or optometrist who attests that the vision in the better eye continues to meet the standard in 49 CFR 391.41(b)(10), and (b) by a medical examiner who attests that the individual is otherwise physically qualified under 49 CFR 391.41; (2) that each individual provide a copy of the ophthalmologist's or optometrist's report to the medical examiner at the time of the annual medical examination; and (3) that each individual provide a copy of the annual medical certification to the employer for retention in the driver's qualification file, or keep a copy in his/her driver's qualification file if he/she is self-employed. The driver must also have a copy of the certification when driving, for presentation to a duly authorized Federal, State, or local enforcement official.

Discussion of Comments

The FMCSA received two comments in this proceeding. The comments were considered and are discussed below.

An anonymous responder sympathized with drivers who do not meet the Federal standards for vision, but expressed reservation to exempting them on the basis that they might not continue to drive safely. This concern is addressed under the heading ''Basis for Exemption Determination'' in this notice.

Advocates for Highway and Auto Safety (AHAS) expresses continued opposition to the FMCSA's policy to grant exemptions from the Federal Motor Carrier Safety Regulations (FMCSRs), including the driver qualification standards. Specifically, the AHAS: (1) Objects to the manner in which the FMCSA presents driver information to the public and makes safety determinations; (2) objects to the agency's reliance on conclusions drawn from the vision waiver program; (3) claims the agency has misinterpreted statutory language on the granting of exemptions (49 U.S.C. 31315 and 31136(e)); and finally (4) suggests that a recent Supreme Court decision affects the legal validity of vision exemptions.

The issues raised by the AHAS were addressed at length in 64 FR 51568 (September 23, 1999), 64 FR 66962 (November 30, 1999), 64 FR 69586 (December 13, 1999), 65 FR 159 (January 3, 2000), 65 FR 57230 (September 21, 2000), and 66 FR 13825 (March 7, 2001). We will not address these points again here, but refer interested parties to those earlier discussions.

Conclusion

After considering the comment to the docket and based upon its evaluation of the 37 exemption applications in accordance with Rauenhorst v. United States Department of Transportation, Federal Highway Administration, 95 F.3d 715 (8th Cir. 1996), the FMCSA exempts Loa M. Boggs, Anthony Brandano, Jerald D. Davis, Vernon J. Dohrn, Stanley E. Elliott, Elmer E. Gockley, Paul C. Gruenberg, Tommy D. Habben, Glenn T. Hehner, Carl R. Hunt, Shane M. Hunter, Thomas M. Ingebretsen, Lonnie M. Jones, Martin D. Keough, Ricky J. Knutson, Randall B. Laminack, Norman R. Lamy, James A. Lenhart, Dennis L. Lockhart, Sr., Jerry J. Lord, Raymond P. Madron, Ronald S. Mallory, Keith G. McCully, Ernest L. McLendon, Charles J. Morman, Eugene C. Murphy, Jack E. Potts, Jr., Bernard A. Ranly, John E. Rogstad, Jerry W. Russell, Stephen G. Sniffin, John R. Snyder, Darwin J. Thomas, Rene R. Trachsel, Stephen D. Vice, John H. Voigts, and Kendle F. Waggle, Jr. from the vision requirement in 49 CFR 391.41(b)(10), subject to the following conditions: (1) That each individual be physically examined every year (a) by an ophthalmologist or optometrist who attests that the vision in the better eye continues to meet the standard in 49 CFR 391.41(b)(10), and (b) by a medical examiner who attests that the individual is otherwise physically qualified under 49 CFR 391.41; (2) that each individual provide a copy of the ophthalmologist's or optometrist's report to the medical examiner at the time of the annual medical examination; and (3) that each individual provide a copy of the annual medical certification to the employer for retention in the driver's qualification file, or keep a copy in his/her driver's qualification file if he/she is self-employed. The driver must also have a copy of the certification when driving, so it may be presented to a duly authorized Federal, State, or local enforcement official.

In accordance with 49 U.S.C. 31315 and 31136(e), each exemption will be valid for 2 years unless revoked earlier by the FMCSA. The exemption will be revoked if: (1) The person fails to comply with the terms and conditions of the exemption; (2) the exemption has resulted in a lower level of safety than was maintained before it was granted; or (3) continuation of the exemption would not be consistent with the goals and objectives of 49 U.S.C. 31315 and 31136. If the exemption is still effective at the end of the 2-year period, the person may apply to the FMCSA for a renewal under procedures in effect at that time.

Issued on: December 19, 2001.

Brian M. McLaughlin,

Associate Administrator, Policy and Program Development.

[FR Doc. 01–31774 Filed 12–26–01; 8:45 am]

BILLING CODE 4910–EX–P

DEPARTMENT OF TRANSPORTATION

Federal Motor Carrier Safety Administration

[Docket Nos. FMCSA–99–5748 and FMCSA–99–6156 (formerly OMCS–99–5748 and OMCS–99–6156)]

Qualification of Drivers; Exemption Applications; Vision

AGENCY: Federal Motor Carrier Safety Administration (FMCSA), DOT.

ACTION: Notice of renewal of exemption; request for comments.

SUMMARY: This notice announces the FMCSA's decision to renew the exemptions from the vision requirement in 49 CFR 391.41(b)(10) for 14 individuals.

DATES: This decision is effective January 3, 2002. Comments from interested persons should be submitted by January 28, 2002.

ADDRESSES: Mail or hand deliver comments to the U.S. Department of Transportation, Dockets Management Facility, Room PL–401, 400 Seventh Street, SW., Washington, DC 20590, or submit electronically at *http://dmses.dot.gov/submit.* All comments received will be available for examination and copying at the above address from 9 a.m. to 5 p.m., e.t., Monday through Friday, except Federal holidays. Those desiring notification of receipt of comments must include a self-addressed, stamped postcard or you may print the acknowledgment page that appears after submitting comments electronically.

FOR FURTHER INFORMATION CONTACT: For information about the vision exemptions in this notice, Ms. Sandra Zywokarte, Office of Bus and Truck Standards and Operations, (202) 366–2987; for information about legal issues related to this notice, Mr. Joseph Solomey, Office of the Chief Counsel, (202) 366–1374, FMCSA, Department of Transportation, 400 Seventh Street, SW., Washington, DC 20590. Office hours are from 7:45 a.m. to 4:15 p.m., e.t., Monday through Friday, except Federal holidays.

SUPPLEMENTARY INFORMATION:

Electronic Access and Filing

You may see all comments online through the Document Management System (DMS) at: *http://dmses.dot.gov/submit.*

Background

Fourteen individuals have requested renewal of their exemptions from the vision requirement in 49 CFR 391.41(b)(10) which applies to drivers of commercial motor vehicles (CMVs) in interstate commerce. They are Woodrow E. Bohley, Kenneth E. Bross, Charlie F. Cook, Russell W. Foster, Curtis N. Fulbright, Vincent I. Johnson, Richard L. Loeffelholz, Herman C. Mash, Frank T. Miller, Charles E. O'Dell, Martin Postma, Robert G. Rascicot, Jon H. Wurtele, and Walter M. Yohn, Jr. Under 49 U.S.C. 31315 and 31136(e), the FMCSA may grant an exemption for a renewable 2-year period if it finds ''such exemption would likely achieve a level of safety that is equivalent to, or greater than, the level that would be achieved absent such exemption.'' Accordingly, the FMCSA has evaluated the 14 petitions for renewal on their merits and decided to extend each exemption for a renewable 2-year period.

On January 3, 2000, the agency published a notice of final disposition announcing its decision to exempt 40 individuals, including 11 of these applicants for renewal, from the vision requirement in 49 CFR 391.41(b)(10) (65 FR 159). The qualifications, experience, and medical condition of each applicant were stated and discussed in detail at 64 FR 54948 (October 8, 1999). Two comments were received, and their contents were carefully considered by the agency in reaching its final decision to grant the petitions (65 FR 159). On November 30, 1999, the agency published a notice of final disposition announcing its decision to exempt 33 individuals, including 3 of these applicants for renewal, from the vision requirement in 49 CFR 391.41(b)(10) (64 FR 66962). The qualifications, experience, and medical condition of the applicant were stated and discussed in detail at 64 FR 40404 (July 26, 1999). Three comments were received, and their contents were carefully considered by the agency in reaching its final decision to grant the petition (64 FR 66962). The agency determined that exempting the individuals from 49 CFR 391.41(b)(10) was likely to achieve a level of safety equal to, or greater than, the level that would be achieved without the exemption as long as the vision in each applicant's better eye continued to meet the standard specified in 49 CFR 391.41(b)(10). As a condition of the exemption, therefore, the agency imposed requirements on the individuals similar to the grandfathering provisions in 49 CFR 391.64(b) applied to drivers who participated in the agency's former vision waiver program.

These requirements are as follows: (1) That each individual be physically examined every year (a) by an ophthalmologist or optometrist who attests that vision in the better eye meets the standard in 49 CFR 391.41(b)(10), and (b) by a medical examiner who attests the individual is otherwise physically qualified under 49 CFR 391.41; (2) that each individual provide a copy of the ophthalmologist's or optometrist's report to the medical examiner at the time of the annual medical examination; and (3) that each individual provide a copy of the annual medical certification to the employer for retention in the driver's qualification file and retain a copy of the certification on his/her person while driving for presentation to a duly authorized Federal, State, or local enforcement official.

Basis for Renewing Exemptions

Under 49 U.S.C. 31315(b)(1), an exemption may be granted for no longer than 2 years from its approval date and may be renewed upon application for an additional 2-year period. In accordance with 49 U.S.C. 31315 and 31136(e), each of the 14 applicants has satisfied the entry conditions for obtaining an exemption from the vision requirements (63 FR 30285; 63 FR 54519; 63 FR 66226; 64 FR 16517), and each has requested timely renewal of the exemption. These 14 applicants have submitted evidence showing that the vision in their better eye continues to meet the standard specified at 49 CFR 391.41(b)(10), and that the vision impairment is stable. In addition, a review of their records of safety while driving with their respective vision deficiencies over the past 2 years indicates each applicant continues to meet the vision exemption standards. These factors provide an adequate basis for predicting each driver's ability to continue to drive safely in interstate commerce. Therefore, the FMCSA concludes that extending the exemption for a period of 2 years is likely to achieve a level of safety equal to that existing without the exemption for each renewal applicant.

Discussion of Comments

The Advocates for Highway and Auto Safety (AHAS) expresses continued opposition to the FMCSA's procedures for renewing exemptions from the vision requirement in 49 CFR 391.41(b)(10). Specifically, the AHAS objects to the agency's extension of the exemptions without any opportunity for public comment prior to the decision to renew and reliance on a summary statement of evidence to make its decision to extend the exemption of each driver.

The issues raised by the AHAS were addressed at length in 66 FR 17994 (April 4, 2001). We will not address

these points again here, but refer interested parties to that earlier discussion.

Conclusion

In accordance with 49 U.S.C. 31315 and 31136(e), the FMCSA extends the exemptions from the vision requirement in 49 CFR 391.41(b)(10) granted to Woodrow E. Bohley, Kenneth E. Bross, Charlie F. Cook, Russell W. Foster, Curtis N. Fulbright, Vincent I. Johnson, Richard L. Loeffelholz, Herman C. Mash, Frank T. Miller, Charles E. O'Dell, Martin Postma, Robert G. Rascicot, Jon H. Wurtele, and Walter M. Yohn, Jr., subject to the following conditions: (1) That each individual be physically examined every year (a) by an ophthalmologist or optometrist who attests that the vision in the better eye continues to meet the standard in 49 CFR 391.41(b)(10), and (b) by a medical examiner who attests that the individual is otherwise physically qualified under 49 CFR 391.41; (2) that each individual provide a copy of the ophthalmologist's or optometrist's report to the medical examiner at the time of the annual medical examination; and (3) that each individual provide a copy of the annual medical certification to the employer for retention in the driver's qualification file and retain a copy of the certification on his/her person while driving for presentation to a duly authorized Federal, State, or local enforcement official. Each exemption will be valid for 2 years unless rescinded earlier by the FMCSA. The exemption will be rescinded if: (1) The person fails to comply with the terms and conditions of the exemption; (2) the exemption has resulted in a lower level of safety than was maintained before it was granted; or (3) continuation of the exemption would not be consistent with the goals and objectives of 49 U.S.C. 31315 and 31136(e).

Request for Comments

The FMCSA has evaluated the qualifications and driving performance of the 14 applicants here and extends their exemptions based on the evidence introduced. The agency will review any comments received concerning a particular driver's safety record and determine if the continuation of the exemption is consistent with the requirements at 49 U.S.C. 31315 and 31136(e). While comments of this nature will be entertained at any time, the FMCSA requests that interested parties with information concerning the safety records of these drivers submit comments by January 28, 2002. All comments will be considered and will be available for examination in the docket room at the above address. The FMCSA will also continue to file in the docket relevant information which becomes available. Interested persons should continue to examine the docket for new material.

Authority: 49 U.S.C. 322, 31136 and 31315; and 49 CFR 1.73.

Issued on: December 19, 2001.

Brian M. McLaughlin,

Associate Administrator, Policy and Program Development.

[FR Doc. 01–31775 Filed 12–26–01; 8:45 am]

BILLING CODE 4910–EX–P

DEPARTMENT OF TRANSPORTATION

Federal Motor Carrier Safety Administration

[DOT Docket No. FMCSA–99–5867]

Parts and Accessories Necessary for Safe Operation; Renewal of Fuel Tank Exemptions for Vehicles Manufactured by the Ford Motor Company

AGENCY: Federal Motor Carrier Safety Administration (FMCSA), DOT.

ACTION: Grant of applications for exemptions.

SUMMARY: The FMCSA is granting the application from the Ford Motor Company (Ford) for a renewal of exemptions for the vehicles specified at the end of this notice from certain fuel tank design and certification labeling requirements in the Federal Motor Carrier Safety Regulations (FMCSRs). The exemptions enable motor carriers to operate commercial motor vehicles (CMVs) manufactured by Ford, and equipped with fuel tanks that do not meet the FMCSA's requirements that fuel tanks be capable of receiving fuel at a rate of at least 20 gallons per minute, and be labeled or marked by the manufacturer to certify compliance with the design criteria. The FMCSA believes the terms and conditions of the exemptions have ensured a level of safety that is equivalent to the level of safety that would be achieved by complying with the regulations, and that renewing the exemptions would not adversely affect highway safety. The exemptions continue to preempt inconsistent State and local requirements applicable to interstate commerce.

DATES: The exemptions are effective on December 27, 2001. The exemptions expire on December 29, 2003.

FOR FURTHER INFORMATION CONTACT: Ms. Deborah M. Freund, Office of Bus and Truck Standards and Operations, (202) 366-4009, Federal Motor Carrier Safety Administration, 400 Seventh Street, SW., Washington, DC 20590–0001. Office hours are from 7:45 a.m. to 4:15 p.m., e.t., Monday through Friday, except Federal holidays.

SUPPLEMENTARY INFORMATION:

Electronic Access

Internet users may access all comments that were submitted to this docket in response to the previous notice by using the universal resource locator (URL) *http://dms.dot.gov,* and by requesting the docket referenced at the beginning of this notice. You can examine and copy this document and all comments received at the U.S. Department of Transportation, Dockets Management Facility, Room PL–401, 400 Seventh Street, SW., Washington, DC 20590–0001 from 9 a.m. to 5 p.m. e.t., Monday through Friday, except Federal holidays.

Background

Ford's Applications for Exemptions

Ford applied for exemptions for the vehicles specified at the end of this notice from 49 CFR 393.67(c)(7)(ii), which requires that certain fuel tank systems on CMVs be designed to permit a fill rate of at least 20 gallons (75.7 liters) per minute, and 49 CFR 393.67(f)(2) and (f)(3), which require that liquid fuel tanks be marked with the manufacturer's name and a certification that the tank conforms to all applicable rules in § 393.67, respectively.

On August 10, 1999 (64 FR 43417), the FHWA published a notice of intent to grant Ford's applications. The FHWA requested public comment on Ford's applications and the agency's safety analysis, and presented other relevant information known to the agency. After considering all the comments received, the agency granted the exemptions on December 20, 1999 (64 FR 71184). In that notice (at 71185), the agency noted that the 20 gallon per minute rate referenced in the FMCSA's regulations, while appropriate for diesel fuel-powered vehicles, mandates that fill pipes on gasoline-powered vehicles be capable of receiving fuel at twice the maximum rate gasoline pumps are designed to dispense fuel. The vehicles in question are gasoline-fueled and are capable of receiving fuel at a rate of 17 gallons per minute.

The exemptions covered § 393.67(c)(7)(ii), Construction of liquid fuel tanks; fill pipe, and §§ 393.67(f)(2) and (f)(3)(ii) which require that liquid fuel tanks be marked with the manufacturer's name, and a certification

that the tank conforms to all applicable rules in § 393.67, respectively.

On November 2, 2001 (66 FR 55727), the FMCSA published a notice of intent to renew this exemption for the specified vehicles. The FMCSA requested public comment on Ford's applications and the agency's safety analysis.

Discussion of Comments to the Notice of Intent to Renew the Exemptions

The FMCSA received one comment, from Ford. Ford requested that the FMCSA renew its exemption for the fuel tanks covered in the November 2, 2001 notice. Ford also requested extension of exemptions to cover the fuel tanks of additional models of E-series vehicles that were not in production at the time of the original 1999 petition, and for certain F-series vehicles.

FMCSA Decision

The FMCSA considered the comments received in response to the November 2 notice and has decided to renew the exemptions for the vehicles specified in that notice. The commercial motor vehicles covered by the exemptions are still in operation, and the agency is not aware of any information, anecdotal or otherwise, that would suggest that the level of safety for the exempted vehicles is not equivalent to the level of safety that would have been achieved if the vehicles complied with §§ 393.67(c)(7)(ii), 393.67(f)(2), and 393.67(f)(3)(ii). No interested parties have contacted the FMCSA or submitted comments to the docket since the December 20, 1999, the date the exemption was granted, indicating that any aspects of the exemptions have had an adverse effect on highway safety. Accordingly, the agency is proposing to renew the exemptions that were the subject of the November 2 notice for another two-year period.

In a separate notice in today's **Federal Register**, the FMCSA announces its preliminary determination of intent to grant Ford's application for an exemption to the additional E-class and F-class vehicles.

Terms and Conditions for the Exemption

The FMCSA is continuing to provide exemptions to §§ 393.67(c)(7)(ii), 393.67(f)(2), and 393.67(f)(3)(ii) for motor carriers operating the vehicles of Ford Econoline-based vehicles specified in the next paragraph. The exemptions are effective upon publication in the **Federal Register** pursuant to 5 U.S.C. 553(d)(1) and are valid until December 29, 2003, unless revoked earlier by the FMCSA. Ford, or any of the affected motor carriers, may apply to the FMCSA for another renewal of the exemption. The exemption continues to preempt inconsistent State or local requirements applicable to interstate commerce.

As with the original exemption, the motor carriers operating these specified vehicles are not required to maintain documentation concerning the exemption because the vehicles and fuel tanks have markings that would enable enforcement officials to identify them. The vehicles covered by the exemptions can be identified by their vehicle identification numbers (VINs). The VINs contain E30, E37, E39, E40, or E47 codes in the fifth, sixth, and seventh positions. The fuel tanks are marked with Ford part numbers F3UA–9002–G*, F3UA–9002–H*, F4UA–9002–V*, F4UA–9002–X*, F5UA–9002–V*, F5UA–9002–X*, F6UA–9002–Y*, F6UA–9002–Z*, F7UA–9002–C*, and F7UA–9002D* where the asterisk (*) represents a ''wild card'' character (any character of the alphabet).

Issued on: December 20, 2001.

Joseph M. Clapp,

Administrator.

[FR Doc. 01–31735 Filed 12–20–01; 2:51 pm]

BILLING CODE 4910–22–P

DEPARTMENT OF TRANSPORTATION

Federal Motor Carrier Safety Administration

[DOT Docket No. FMCSA–99–5867]

Parts and Accessories Necessary for Safe Operation; Fuel Tank Exemptions for Vehicles Manufactured by the Ford Motor Company

AGENCY: Federal Motor Carrier Safety Administration (FMCSA), DOT.

ACTION: Notice of applications for exemptions and intent to grant exemptions; request for comments.

SUMMARY: The FMCSA is announcing its intent to grant exemptions for additional vehicles specified at the end of this notice, in response to an application from the Ford Motor Company (Ford), from certain fuel tank design and certification labeling requirements in the Federal Motor Carrier Safety Regulations (FMCSRs). This exemption would enable motor carriers to continue operating commercial motor vehicles (CMVs) manufactured by Ford, and equipped with fuel tanks that do not meet the FMCSA's requirements that fuel tanks be capable of receiving fuel at a rate of at least 20 gallons per minute, and be labeled or marked by the manufacturer to certify compliance with the design criteria. The FMCSA believes the terms and conditions of the current exemptions have ensured a level of safety that is equivalent to the level of safety that would be achieved by complying with the regulations, and that granting the additional exemptions would not adversely affect highway safety. The additional exemptions, if granted, would continue to preempt inconsistent State and local requirements applicable to interstate commerce.

DATES: Comments must be received on or before January 28, 2002.

FOR FURTHER INFORMATION CONTACT: Ms. Deborah M. Freund, Office of Bus and Truck Standards and Operations, (202) 366–4009, Federal Motor Carrier Safety Administration, 400 Seventh Street, SW., Washington, DC 20590–0001. Office hours are from 7:45 a.m. to 4:15 p.m., e.t., Monday through Friday, except Federal holidays.

SUPPLEMENTARY INFORMATION:

Electronic Access

You can mail or deliver comments to the U.S. Department of Transportation, Dockets Management Facility, Room PL–401, 400 Seventh Street, SW., Washington, DC 20590–0001. You can also submit comments electronically at *http://dms.dot.gov.* Please include the docket number that appears in the heading of this document. You can examine and copy this document and all comments received at the same Internet address or at the Dockets Management Facility from 9 a.m. to 5 p.m., e.t., Monday through Friday, except Federal holidays. If you want to know that we received your comments, please include a self-addressed, stamped postcard or include a copy of the acknowledgement page that appears after you submit comments electronically.

Background

Ford's Applications for Exemptions

Ford first applied in April 1999 for exemptions from 49 CFR 393.67(c)(7)(ii), which requires that certain fuel tank systems on CMVs be designed to permit a fill rate of at least 20 gallons (75.7 liters) per minute, and 49 CFR 393.67(f)(2) and (f)(3), which require that liquid fuel tanks be marked with the manufacturer's name and a certification that the tank conforms to all applicable rules in § 393.67, respectively.

On August 10, 1999 (64 FR 43417), the FHWA published a notice of intent to grant Ford's applications. The FHWA requested public comment on Ford's

applications and the agency's safety analysis, and presented other relevant information known to the agency. After considering all the comments received, the agency granted the exemptions on December 20, 1999 (64 FR 71184). In that notice (at 71185), the agency noted that the 20 gallon per minute rate referenced in the FMCSA's regulations, while appropriate for diesel fuel-powered vehicles, mandates that fill pipes on gasoline-powered vehicles be capable of receiving fuel at twice the maximum rate gasoline pumps are designed to dispense fuel. The vehicles in question are gasoline-fueled and are capable of receiving fuel at a rate of 17 gallons per minute.

The exemptions covered § 393.67(c)(7)(ii), Construction of liquid fuel tanks; fill pipe, and §§ 393.67(f)(2) and (f)(3)(ii) which require that liquid fuel tanks be marked with the manufacturer's name, and a certification that the tank conforms to all applicable rules in § 393.67, respectively. The exemptions were granted for two years.

On November 2, 2001 (66 FR 55727) the FMCSA published a notice of its intent to renew these exemptions. The FMCSA received one comment, from Ford. Ford requested that the FMCSA renew its exemption for the fuel tanks covered in the November 2, 2001 notice. Ford also requested additional exemptions for the vehicles specified at the end of this notice to cover the fuel tanks of additional models of E-series vehicles that were not in production at the time of the original 1999 petition, and for certain F-series vehicles.

In a separate notice in today's **Federal Register**, the FMCSA has decided to renew the exemption granted for the vehicles specified in Ford's original petition.

Basis for Preliminary Determination To Grant the Additional Exemptions

The FMCSA intends to grant the requested additional exemptions because the commercial motor vehicles covered by the exemptions are substantially similar to those covered by the original exemption. The vehicles that are the subject of Ford's new petition are E-series and F-series vehicles that were not in production at the time of Ford's original petition. Ford states that the exemptions for these vehicles are needed for the same reasons described in their original request. Among other things:

> they are equipped with fuel tanks mounted between the frame rails, use a fill system conforming to Environmental Protection Agency (EPA) fill requirements, and are designed for conformance to FMVSS [Federal Motor Vehicle Safety Standard] 301 performance requirements. Although the vehicles over 10,000 [lbs.] GVWR are not required to meet FMVSS 301, the fill system on these vehicles is based on the design for vehicles conforming to FMVSS 301.

These vehicles are still in operation, and the agency is not aware of any information, anecdotal or otherwise, that would suggest that the level of safety for the exempted vehicles is not equivalent to the level of safety of that would have been achieved if the vehicles complied with §§ 393.67(c)(7)(ii), 393.67(f)(2), and 393.67(f)(3)(ii). No interested parties have contacted the FMCSA or submitted comments to the docket since the original exemption was granted, on December 20, 1999, indicating that any aspects of the exemptions have had an adverse effect on highway safety. Accordingly, the agency is proposing to grant the exemptions for these additionally specified similar vehicles.

Terms and Conditions for the Exemption

The FMCSA would continue to provide exemptions to §§ 393.67(c)(7)(ii), 393.67(f)(2), and 393.67(f)(3)(ii) for motor carriers operating additional Ford Econoline-based vehicles, as specified in the next paragraph. The exemption renewal would be effective upon publication in the **Federal Register** pursuant to 5 U.S.C. 553(d)(1) and would be valid for two years from the date of approval, unless revoked earlier by the FMCSA. Ford, or any of the affected motor carriers, may apply to the FMCSA for another renewal of the exemption. The exemption would continue to preempt inconsistent State or local requirements applicable to interstate commerce.

As with the original exemption, the motor carriers operating these vehicles would not be required to maintain documentation concerning the exemption because the vehicles and fuel tanks have markings that would enable enforcement officials to identify them. The vehicles covered by the exemptions can be identified by their vehicle identification numbers (VINs). The VINs for the additional E-series vehicles contain E35 or E55 codes in the fifth, sixth, and seventh positions. The fuel tanks are marked with Ford part numbers F3UA–9002–G*, F3UA–9002–H*, F4UA–9002–V*, F4UA–9002–X*, F5UA–9002–V*, F5UA–9002–X*, F6UA–9002–Y*, F6UA–9002–Z*, F7UA–9002–C*, F7UA–9002–D*, YC25–9002–D* (a new fuel tank for E37 series vehicles), or 2C24–9002–E* (a new fuel tank for E55 series vehicles) where the asterisk (*) represents a ''wild card'' character (any character of the alphabet). The VINs for the F-series vehicles contain an F53 code in the fifth, sixth, and seventh positions. The fuel tanks are marked with part numbers 1C34–9K007–F*, 1C34–9K007–G*, and 1C34–9K007–H* where the asterisk (*) represents a ''wild card'' character (any character of the alphabet).

Request for Comments

In accordance with 49 U.S.C. 31315 and 31136(e), the FMCSA is requesting public comment from all interested persons on the exemption proposal. All comments received before the close of business on the comment closing date indicated at the beginning of this notice will be considered and will be available for examination in the docket at the location listed under the address section of this notice. Comments received after the comment closing date will be filed in the public docket and will be considered to the extent practicable, but the FMCSA may renew the exemptions at any time after the close of the comment period. In addition to late comments, the FMCSA will also continue to file, in the public docket, relevant information that becomes available after the comment closing date. Interested persons should continue to examine the public docket for new material.

Issued on: December 20, 2001.

Joseph M. Clapp,

Administrator.

[FR Doc. 01–31736 Filed 12–20–01; 2:51 pm]

BILLING CODE 4910–22–P

DEPARTMENT OF TRANSPORTATION

Federal Motor Carrier Safety Administration

[DOT Docket No. FMCSA–99–6285]

Parts and Accessories Necessary for Safe Operation; Renewal of Fuel Tank Exemptions for Vehicles Manufactured by the General Motors Corporation

AGENCY: Federal Motor Carrier Safety Administration (FMCSA), DOT.

ACTION: Notice of intent to renew exemptions; request for comments.

SUMMARY: The FMCSA is announcing its intent to renew exemptions for the vehicles specified at the end of this notice in response to applications from the General Motors Corporation (GM), from certain fuel tank design and certification labeling requirements in the Federal Motor Carrier Safety Regulations (FMCSRs). Renewal of the exemptions would enable motor carriers to continue operating commercial motor vehicles (CMVs) manufactured by GM,

and equipped with fuel tanks that do not meet the FMCSA's requirements that fuel tanks be capable of receiving fuel at a rate of at least 20 gallons per minute, and be labeled or marked by the manufacturer to certify compliance with the design criteria. The FMCSA believes the terms and conditions of the exemptions have ensured a level of safety that is equivalent to the level of safety that would be achieved by complying with the regulations, and that renewing the exemptions would not adversely affect highway safety. The exemptions, if renewed, would continue to preempt inconsistent State and local requirements applicable to interstate commerce.

DATES: Comments must be received on or before January 28, 2002.

FOR FURTHER INFORMATION CONTACT: Ms. Deborah M. Freund, Office of Bus and Truck Standards and Operations, (202) 366–4009, Federal Motor Carrier Safety Administration, 400 Seventh Street, SW., Washington, DC 20590–0001. Office hours are from 7:45 a.m. to 4:15 p.m., e.t., Monday through Friday, except Federal holidays.

SUPPLEMENTARY INFORMATION:

Electronic Access

You can mail or deliver comments to the U.S. Department of Transportation, Dockets Management Facility, Room PL–401, 400 Seventh Street, SW., Washington, DC 20590–0001. You can also submit comments electronically at *http://dms.dot.gov.* Please include the docket number that appears in the heading of this document. You can examine and copy this document and all comments received at the same Internet address or at the Dockets Management Facility from 9 a.m. to 5 p.m., e.t., Monday through Friday, except Federal holidays. If you want to know that we received your comments, please include a self-addressed, stamped postcard or include a copy of the acknowledgement page that appears after you submit comments electronically.

Background

GM's Application for Exemptions

GM previously applied for exemptions from 49 CFR 393.67(c)(7)(ii), which requires that certain fuel tank systems on CMVs be designed to permit a fill rate of at least 20 gallons (75.7 liters) per minute, and 49 CFR 393.67(f)(2) and (f)(3), which require that liquid fuel tanks be marked with the manufacturer's name and a certification that the tank conforms to all applicable rules in § 393.67, respectively.

On December 20, 1999 (64 FR 71186), the FHWA published a notice of intent to grant GM's applications. The FHWA requested public comment on GM's applications and the agency's safety analysis, and presented other relevant information known to the agency. After considering all the comments received, the agency granted the exemptions on April 26, 2000 (65 FR 24531). In that notice (at 24532–24533), the agency noted that the 20 gallon per minute rate referenced in the FMCSA's regulations, while appropriate for diesel fuel-powered vehicles, mandates that fill pipes on gasoline-powered vehicles be capable of receiving fuel at twice the maximum rate gasoline pumps are designed to dispense fuel. The vehicles in question are gasoline-fueled and are capable of receiving fuel at a rate of approximately 10 gallons per minute.

The exemptions covered the vehicles specified at the end of this notice for § 393.67(c)(7)(ii), Construction of liquid fuel tanks; fill pipe, and §§ 393.67(f)(2) and (f)(3)(ii) which require that liquid fuel tanks be marked with the manufacturer's name, and a certification that the tank conforms to all applicable rules in " § 393.67, respectively.

Reason for Renewing the Exemptions

The FMCSA intends to renew the exemptions because the commercial motor vehicles covered by the exemptions are still in operation, and the agency is not aware of any information, anecdotal or otherwise, that would suggest that the level safety for the exempted vehicles is not equivalent to the level of safety of that would have been achieved if the vehicles complied with §§ 393.67(c)(7)(ii), 393.67(f)(2), and 393.67(f)(3)(ii). No interested parties have contacted the FMCSA or submitted comments to the docket since the exemption was granted on April 26, 2000, indicating that any aspects of the exemptions have had an adverse effect on highway safety. Accordingly, the agency is proposing to renew the exemptions for another two-year period.

Terms and Conditions for the Exemption Renewal

The FMCSA would continue to provide exemptions to §§ 393.67(c)(7)(ii), 393.67(f)(2), and 393.67(f)(3)(ii) for motor carriers operating GM G–Vans (Chevrolet Express and GMC Savanna) and full-sized C/K trucks (Chevrolet Silverado and GMC Sierra) with gross vehicle weight ratings over 10,000 pounds. The exemption renewal would be effective upon publication in the **Federal Register** pursuant to 5 U.S.C. 553(d)(1) and would be valid for two years from the date of approval, unless revoked earlier by the FMCSA. GM, or any of the affected motor carriers, may apply to the FMCSA for another renewal of the exemption. The exemption would continue to preempt inconsistent State or local requirements applicable to interstate commerce.

As with the original exemption, the motor carriers operating these vehicles would not be required to maintain documentation concerning the exemption because the vehicles have markings that would enable enforcement officials to identify them. The vehicles covered by the exemptions can be identified by their vehicle identification numbers (VINs). The VINs contain either a "J" or a "K" in the forth position of the VIN. IN addition, the seventh position of the VINs on the G–Van would contain a "1."

Request for Comments

In accordance with 49 U.S.C. 31315 and 31136(e), the FMCSA is requesting public comment from all interested persons on the exemption renewal. All comments received before the close of business on the comment closing date indicated at the beginning of this notice will be considered and will be available for examination in the docket at the location listed under the address section of this notice. Comments received after the comment closing date will be filed in the public docket and will be considered to the extent practicable, but the FMCSA may renew the exemptions at any time after the close of the comment period. In addition to late comments, the FMCSA will also continue to file, in the public docket, relevant information that becomes available after the comment closing date. Interested persons should continue to examine the public docket for new material.

Issued on: December 20, 2001.

Joseph M. Clapp,

Administrator.

[FR Doc. 01–31737 Filed 12–26–01; 8:45 am]

BILLING CODE 4910–22–P

DEPARTMENT OF TRANSPORTATION

Federal Transit Administration

[FTA Docket No. FTA–2001–11218]

Notice of Request for the Extension of Currently Approved Information Collection

AGENCY: Federal Transit Administration, DOT.

ACTION: Notice of request for comments.

SUMMARY: In accordance with the Paperwork Reduction Act of 1995, this notice announces the intention of the Federal Transit Administration (FTA) to request the Office of Management and Budget (OMB) to extend the following currently approved information collection: 49 U.S.C. Section 5335(a) and (b) National Transit Database

DATES: Comments must be submitted before February 25, 2002.

ADDRESSES: All written comments must refer to the docket number that appears at the top of this document and be submitted to the United States Department of Transportation, Central Dockets Office, PL–401, 400 Seventh Street, SW., Washington, DC 20590. All comments received will be available for examination at the above address from 10:00 a.m. to 5:00 p.m., e.t., Monday through Friday, except Federal holidays. Those desiring notification of receipt of comments must include a self-addressed, stamped postcard/envelope.

FOR FURTHER INFORMATION CONTACT:

—Gary Delorme, National Transit Database Manager, Office of Program Management (202) 366–1652.

SUPPLEMENTARY INFORMATION: Interested parties are invited to send comments regarding any aspect of this information collection, including: (1) The necessity and utility of the information collection for the proper performance of the functions of the FTA; (2) the accuracy of the estimated burden; (3) ways to enhance the quality, utility, and clarity of the collected information; and (4) ways to minimize the collection burden without reducing the quality of the collected information. Comments submitted in response to this notice will be summarized and/or included in the request for OMB approval of this information collection.

Title: 49 U.S.C. Section 5335(a) and (b) (*OMB Number: 2132–0008*).

Background: 49 U.S.C. Section 5335(a) and (b) require the Secretary of Transportation to maintain a reporting system by uniform categories to accumulate mass transportation financial and operating information and a uniform system of accounts and records. Each year, transit authorities that receive FTA funding submit data to the National Transit Database. The data that is submitted is used in statutory formulae to apportion over $4 billion in federal funds back to those agencies. In addition, federal, state, and local governments, transit agencies/boards, labor unions, manufacturers, researchers, consultants and universities use the National Transit Database for making transit related decisions. State and local governments also use the National Transit Database in allocating funds under 49 U.S.C. Section 5307. National Transit Database information is essential for understanding cost, ridership and other national performance trends, including transit's share of urban travel. It would be difficult to determine the future structure of FTA programs, to set policy, and to make funding and other decisions relating to the efficiency and effectiveness of the Nation's transit operations without the National Transit Database.

Respondents: State and local government, business or other for-profit institutions, non-profit institutions, and small business organizations.

Estimated Annual Burden on Respondents: 412 hours for each of the 578 respondents.

Estimated Total Annual Burden: 238,136 hours.

Frequency: Annual.

Issued: December 20, 2001.

Dorrie Y. Aldrich,

Associate Administrator for Administration.

[FR Doc. 01–31840 Filed 12–26–01; 8:45 am]

BILLING CODE 4910–57–P

DEPARTMENT OF TRANSPORTATION

Surface Transportation Board

[STB Ex Parte No. 290 (Sub No. 5) (2002–1)]

Quarterly Rail Cost Adjustment Factor

AGENCY: Surface Transportation Board.

ACTION: Approval of rail cost adjustment factor.

SUMMARY: The Board has approved the first quarter 2002 rail cost adjustment factor (RCAF) and cost index filed by the Association of American Railroads. The first quarter 2002 RCAF (Unadjusted) is 1.076. The first quarter 2002 RCAF (Adjusted) is 0.576. The first quarter 2002 RCAF–5 is 0.551.

EFFECTIVE DATE: January 1, 2002.

FOR FURTHER INFORMATION CONTACT: H. Jeff Warren, (202) 565–1533. Federal Information Relay Service (FIRS) for the hearing impaired: 1–800–877–8339.

SUPPLEMENTARY INFORMATION: Additional information is contained in the Board's decision. To purchase a copy of the full decision, write to, call, or pick up in person from the Board's contractor, Dā-To-Dā Legal, Suite 405, 1925 K Street, NW, Washington, DC 20006, phone (202) 293–7776. [Assistance for the hearing impaired is available through TDD services 1 (800) 877–8339.]

This action will not significantly affect either the quality of the human environment or energy conservation.

Pursuant to 5 U.S.C. 605(b), we conclude that our action will not have a significant economic impact on a substantial number of small entities within the meaning of the Regulatory Flexibility Act.

Decided: December 19, 2001.

By the Board, Chairman Morgan, Vice Chairman Clyburn, and Commission Burkes.

Vernon A. Williams,

Secretary.

[FR Doc. 01–31765 Filed 12–26–01; 8:45 am]

BILLING CODE 4915–00–P

DEPARTMENT OF TRANSPORTATION

Surface Transportation Board

[STB Finance Docket No. 34135]

The Fulton Railroad Co., Ltd.—Acquisition and Operation Exemption—Cincinnati Railway Company

The Fulton Railroad Co., Ltd. (Fulton), a noncarrier, has filed a verified notice of exemption under 49 CFR 1150.31 to acquire from Cincinnati Railway Company and operate approximately 4,800 feet of track from a beginning point of milepost 0.0 and continuing for 4,800 feet to end of track, in the City of Cincinnati, Millcreek Township, Hamilton County, OH (line).[1]

The transaction is scheduled to be consummated on or about December 15, 2001. The earliest the transaction can be consummated is December 14, 2001, the effective date of the exemption (7 days after the notice of exemption was filed).

If the verified notice contains false or misleading information, the exemption is void *ab initio.* Petitions to reopen the proceeding to revoke the exemption under 49 U.S.C. 10502(d) may be filed at any time. The filing of a petition to revoke will not automatically stay the transaction.

An original and 10 copies of all pleadings, referring to STB Finance Docket No. 34135 must be filed with the Surface Transportation Board, Office of the Secretary, Case Control Unit, 1925 K Street, NW., Washington, DC 20423–0001. In addition, a copy of each pleading must be served on Robert L. Calhoun, Esq., Redmon, Peyton & Braswell, LLP, 510 King Street, Suite 301, Alexandria, VA 22314.

[1] Fulton states that it will be the operator of the line but that it is engaging in discussions with the Indiana & Ohio Railway Company (IORY) for IORY to assume operations over the line.

Board decisions and notices are available on our Web site at *www.stb.dot.gov.*

Decided: December 14, 2001.

By the Board, David M. Konschnik, Director, Office of Proceedings.

Vernon A. Williams,

Secretary.

[FR Doc. 01–31507 Filed 12–26–01; 8:45 am]

BILLING CODE 4915–00–P

DEPARTMENT OF TRANSPORTATION

Surface Transportation Board

[STB Finance Docket No. 34118]

The Athens Line, LLC—Lease and Operation Exemption—Norfolk Southern Railway Company and Central of Georgia Railroad Company

The Athens Line, LLC (ABR), a noncarrier, has filed a verified notice of exemption under 49 CFR 1150.31 to acquire by lease and to operate adjoining lines of Central of Georgia Railroad Company (CGA) and CGA's parent Norfolk Southern Railway Company (NS) through an operating contract with The Great Walton Railroad Company, Inc. The lines extend between CGA milepost F–75.5 at Madison, GA, to CGA milepost F–106.3 at Athens, GA,[1] and NS milepost NE–39.1 at Athens to NS milepost NE–32.0 at a point designated as Junior State, GA, a distance of approximately 38 miles. The line includes the following stations in Georgia: Bishop, Watkinsville, Whitehall, Athens and Paradise Valley. NS and ABR intend to interchange at either Paradise Valley or Junior State. ABR will grant trackage rights back to NS between NS milepost NE–32.0 and milepost NE–37.4 solely for purposes of interchange. ABR certifies that its projected annual revenues will not exceed $5 million.

The transaction was scheduled to be consummated on or after December 7, 2001, the effective date of the exemption, with ABR's assumption of operations scheduled for December 29, 2001.

[1] ABR states that it understands that the transaction covered by this exemption will not create any residual common carrier obligation for CGA to resume operation of the Madison-Bishop segment of the Madison-Athens line should ABR sometime in the future obtain Board authority to discontinue its operations over that segment. *See Central of Georgia Railroad Company—Discontinuance Exemption—Operations Between Madison and Bishop, GA*, Docket No. AB–290 (Sub-No. 37X) (ICC served Nov. 3, 1988). (CGA received exemption discontinue operations between CGA milepost F–75.5 near Madison and milepost F–91.5 at Bishop). Abandonment of the segment would require further Board action or exemption.

If the notice contains false or misleading information, the exemption is void *ab initio.* Petitions to revoke the exemption under 49 U.S.C. 10502(d) may be filed at any time. The filing of a petition to revoke will not automatically stay the transaction.

An original and 10 copies of all pleadings, referring to STB Finance Docket No. 34118, must be filed with the Surface Transportation Board, Office of the Secretary, Case Control Unit, 1925 K Street, N.W., Washington, DC 20423–0001. In addition, one copy of each pleading must be served on David C. Reeves, Troutman Sanders LLP, 401 Ninth Street, N.W., Suite 1000, Washington, DC 20004–2134.

Board decisions and notices are available on our web site at ''*WWW.STB.DOT.GOV.*''

Decided: December 18, 2001.

By the Board, David M. Konschnik, Director, Office of Proceedings.

Vernon A. Williams,

Secretary.

[FR Doc. 01–31766 Filed 12–26–01; 8:45 am]

BILLING CODE 4915–00–P

DEPARTMENT OF THE TREASURY

Office of the Assistant Secretary for Financial Institutions; Notice of Funds Availability (NOFA) Inviting Applications for the First Accounts Program

AGENCY: Office of the Assistant Secretary for Financial Institutions, Department of the Treasury.

ACTION: Notice of Funds Availability (NOFA) inviting applications.

SUMMARY: The Consolidated Appropriations Act, 2001 (Public Law 106–554, 114 Stat. 2763, 2763A–126) and the Department of Transportation and Related Agencies Appropriations Act, 2001 (Public Law 106–346, 114 Stat. 1356, 1356A–44) appropriated funds to the Department of the Treasury (''Treasury'') to develop and implement programs to expand access to financial services for low- and moderate-income individuals (the ''First Accounts Program''). This NOFA invites grant applications from eligible entities that will either directly, or through one or more insured depository institutions/insured credit unions, provide low-cost electronic, checking, or other types of accounts to low- and moderate-income individuals who currently do not have an account with an insured depository institution or an insured credit union. The paramount goal of the First Accounts Program grants to be awarded under this NOFA is to move a maximum number of ''unbanked'' low- and moderate-income individuals to a ''banked'' status with either an insured depository institution or an insured credit union. Treasury intends to award up to $8 million in appropriated funds under this NOFA. Treasury reserves the right to award in excess of $8 million in appropriated funds under this NOFA provided that the funds are available, and Treasury deems it appropriate. Eligible entities include, but are not limited to, insured depository institutions, insured credit unions, financial services electronic networks, employers of unbanked low- and moderate-income individuals, community development financial institutions, nonprofit organizations, States, Local Governments, Indian Tribal Governments, and labor organizations.

DATES: Applications may be submitted at any time, commencing December 27, 2001, and may be submitted by mail or by overnight/express delivery service, or electronically, in the format prescribed by Treasury. (Applications sent by facsimile or delivered by hand will not be accepted). The deadline for receipt of an application is March 20, 2002. Paper applications received in the specific Treasury office designated below after that date will not be considered, except as follows. An application mailed via the United States Postal Service will be considered as having met the application deadline if it is clearly postmarked on or before midnight March 20, 2002. An application sent by overnight/express delivery will be considered as having met the application deadline if it is placed in transit by no later than March 20, 2002 with an overnight/express delivery service. In each such case, it is advisable to obtain documentation from the carrier showing the date the application was placed in transit. A single, clear date stamp will help in determining whether the delivery of a paper application has met the deadline requirements set forth above. Electronic applications received at the specific email address set forth below after March 20, 2002 will not be considered. While Treasury will accept electronic applications, it is currently unable to collect electronic signatures for the First Accounts Program. As a result, an applicant sending an application electronically shall also submit by mail or overnight/express delivery service signed and dated hardcopy signature pages and certifications contained in the First Accounts Program application packet. Such hardcopies must be

received in the specific Treasury office designated below by 6 p.m. EST on April 3, 2002. Hardcopy signature pages and certifications received in the specific Treasury office designated below after that date and time will result in the related application being eliminated from consideration for a grant award.

ADDRESSES: Paper applications shall be sent to: Department of the Treasury, ATTN: First Accounts, Main Treasury Building, Room 5017, Washington, DC 20220. Electronic applications shall be sent to: *first.accounts@do.treas.gov.*

OBTAIN APPLICATIONS: Applications are available on the Treasury website at *www.treas.gov/firstaccounts.*

FOR FURTHER INFORMATION CONTACT: Questions regarding the programmatic requirements for the First Accounts Program may be submitted electronically to Jean Whaley, Director, Office of the Assistant Secretary for Financial Institutions, at *jean.whaley@do.treas.gov.* All questions and accompanying answers will be posted and made available to the public at *www.treas.gov/firstaccounts.*

SUPPLEMENTARY INFORMATION:

I. Background

Without basic financial services, low- and moderate-income individuals may have a reduced ability to manage their finances, and may be limited in planning and saving for the future. Such individuals may have limited access to other financial products such as credit cards, residential mortgages, or automobile loans. Some of the reasons why low- and moderate-income individuals do not have bank accounts are a lack of low-cost account products tailored to meet their needs, previous problems with bank accounts, insufficient convenient access, a lack of consumer education, and a financial services provider perception that such accounts may not be profitable. The Federal Reserve's 1998 Survey of Consumer Finances indicates that nearly one out of ten families in the United States lacks either a checking or savings account. Most of those families had annual incomes below $25,000, and most lived in low- and moderate-income service areas.

To address this disparity, Congress appropriated funds for the First Accounts Program. Specifically, the Consolidated Appropriations Act, 2001 (Public Law 106–554, 114 Stat. 2763, 2763A–126) and the Department of Transportation and Related Agencies Appropriations Act, 2001 (Public Law 106–346, 114 Stat. 1356, 1356A–44) authorized the Department of the Treasury (''Treasury'') to develop and implement programs to expand access to financial services for low- and moderate-income individuals. Treasury will implement the First Accounts Program through three related mechanisms: (1) Funding private sector provision of low-cost accounts and access to Automated Teller Machines (''ATMs'') to low- and moderate-income individuals who do not currently utilize bank accounts or other financial service opportunities; (2) funding financial education for low- and moderate-income individuals; and (3) conducting research on the financial services needs of low- and moderate-income individuals (this is not the subject of this NOFA). This NOFA invites grant applications from eligible entities that will, either directly or through one or more partners, provide low-cost electronic, checking, or other types of accounts and access to ATMs to low- and moderate-income individuals who currently do not have an account with an insured depository institution or an insured credit union. The paramount goal of the First Accounts Program grants to be awarded under this NOFA is to move a maximum number of ''unbanked'' low- and moderate-income income individuals to a ''banked'' status with either an insured depository institution or an insured credit union through the development of financial products and services that can serve as replicable models in meeting the financial services needs of such individuals in other communities without the need for ongoing public subsidies. Additional goals include the provision of financial education to unbanked low- and moderate-income individuals to enhance the sustainability of the new financial relationship. The following contains an illustrative listing of the types of projects that are eligible to be funded under this NOFA:

(1) An insured depository institution/insured credit union partnering with one or more small business enterprises that are employers of unbanked low- and moderate-income individuals to provide such employees with both low-cost electronic accounts, and increased access to ATMs through the placement of one or more ATMs on-site.

(2) An insured depository institution or an insured credit union providing low-cost checking accounts to unbanked low- and moderate-income individuals.

(3) An insured depository institution or an insured credit union providing low-cost electronic accounts to unbanked low- and moderate-income individuals.

(4) A labor organization, whose membership consists of unbanked low- and moderate-income individuals, establishing a low-income designated insured credit union or an insured credit union that will become certified as a community development financial institution.

(5) A faith based nonprofit organization partnering with one or more insured depository institutions/insured credit unions to provide low-cost accounts and financial education for unbanked low- and moderate-income individuals.

(6) An Indian Tribal Government partnering with one or more insured depository institutions and/or insured credit unions to provide unbanked low- and moderate-income tribal members with low-cost electronic accounts, financial education, and increased access to funds through the placement of ATMs on the Indian reservation.

(7) An insured community development financial institution partnering with service industry employers (e.g. fast food restaurant franchisees) to provide unbanked low- and moderate-income employees with free checking accounts, provided a minimum account balance of $100 is maintained.

Treasury intends to award up to $8 million in appropriated funds under this NOFA. Treasury reserves the right to award in excess of $8 million in appropriated funds under this NOFA provided that the funds are available, and Treasury deems it appropriate. Treasury reserves the right to fund, in whole or in part, any, all, or none of the applications submitted in response to this NOFA.

II. Eligibility

In order to be eligible to receive funding under this NOFA, an eligible entity shall, at a minimum, propose to provide low-cost electronic, checking or other types of accounts to ''unbanked'' low- and moderate-income individuals either directly (in the case of an applicant that is an insured credit union or an insured depository institution) or indirectly through one or more insured depository institutions and/or insured credit unions. In addition, only projects that propose new activities or expand existing activities will be considered eligible for funding under this NOFA. Eligible entities include community development financial institutions, depository institution holding companies, employers, financial services electronic networks, Indian Tribal Governments, insured credit unions (as an insured credit union's charter and field of membership allow),

insured depository institutions, labor organizations, Local Governments, non-profit organizations, and States. Individuals are not eligible to receive funding under this NOFA. Each application shall identify a single applicant, which must, at the time of application, be a duly organized and validly existing legal entity under the laws of the jurisdiction in which it is incorporated or otherwise established.

III. Application Packet

An applicant under this NOFA must submit the materials described in the application packet in the format prescribed therein. Applications are available on the Treasury website at *www.treas.gov/firstaccounts.*

IV. Definitions

The following definitions shall apply to the terms contained in this NOFA and the application packet:

(a) *Community development financial institution* means an organization that has been certified as such pursuant to 12 CFR § 1805.201 by the Department of the Treasury's Community Development Financial Institutions Fund.

(b) *Depository institution holding company* means a bank holding company or a savings and loan holding company as defined in section 3 of the Federal Deposit Insurance Act (12 U.S.C. 1813(w)(1)).

(c) *Electronic account* means an account at an insured credit union or an insured depository institution that has the following minimum features: (1) Electronic access; and (2) provides the same consumer protections that are available to other account holders at the same institution.

(d) *Eligible entity* means any legal entity including a corporation, partnership, governmental body, agency, or association, other than an agency or instrumentality of the United States.

(e) *Employee* means an individual who provides services or labor for an employer for wages or other remuneration but does not mean independent contractors.

(f) *Employer* means a person or entity that engages the services or labor of low- and moderate-income employees to be performed in the United States for wages or other remuneration, but shall not include an agency or instrumentality of the United States.

(g) *Financial services electronic network* means an organization or entity that provides electronic access to an individual's account at an insured credit union or an insured depository institution, including an automated teller machine network, point-of-sale-network, and a provider of such services through the Internet.

(h) *Indian reservation* has the same meaning as in section 4(10) of the Indian Child Welfare Act of 1978 (25 U.S.C. 1903(10)) and, to the extent not already included, shall include lands held by incorporated Native groups, regional corporations, and village corporations, as defined or established pursuant to the Alaska Native Claims Settlement Act; public domain Indian allotments; and former Indian reservations in the State of Oklahoma.

(i) *Indian Tribal Government* means any Indian Tribe, band, pueblo, nation, or other organized group or community, including any Alaska Native village or regional or village corporation, as defined in or established pursuant to the Alaska Native Claims Settlement Act which is recognized as eligible for special programs and services provided by the United States to Indians because of their status as Indians.

(j) *Insured credit union* means any credit union, the member accounts of which are insured by the National Credit Union Share Insurance Fund.

(k) *Insured depository institution* means any bank or savings association, the deposits of which are insured by the Federal Deposit Insurance Corporation.

(l) *Labor organization* means an organization of any kind in which employees participate and which exists for the purpose, in whole or in part, of dealing with employers concerning grievances, labor disputes, wages, rates of pay, hours of employment, or conditions of work.

(m) *Local Government* means a political subdivision of a State including, without limitation, a county, municipality, city, town, township, local public authority school district, special district, intrastate district, or any agency or instrumentality of any of the foregoing.

(n) *Low- and moderate-income* means a family income that does not exceed—(1) for nonmetropolitan areas, 80 percent of the statewide median family income; or (2) for metropolitan areas, 80 percent of the greater of the statewide median family income or metropolitan area median family income.

(o) *Low- and moderate-income service* area means: (1) An Indian reservation; (2) any population census tract located within a metropolitan area in which the median family income does not exceed 80 percent of the greater of the statewide median family income or the metropolitan median family income; or (3) any population census tract which is not located within a metropolitan area in which the median family income does not exceed 80 percent of statewide median family income.

(p) *Low-income designated credit* union means an insured credit union that meets the criteria contained in 12 CFR 701.34.

(q) *State* means any of the several States of the United States, the District of Columbia, the Commonwealth of Puerto Rico, any territory or possession of the United States, or any agency or instrumentality of any of the foregoing.

(r) *Unbanked* means an individual who currently does not have an account at an insured credit union or an insured depository institution.

V. Evaluation

All applications will be reviewed for eligibility and completeness. If determined to be eligible and complete, applications will be evaluated by Treasury on a competitive basis in accordance with the criteria contained in this NOFA.

Phase One—Scoring Review

In conducting its initial substantive review, Treasury will evaluate each application and assign numeric scores using a 100 point scale as follows:

(a) The Likelihood of Success Criterion (the extent to which the project: (1) Will serve a meaningful number of unbanked low- and moderate-income individuals; (2) is shown to be likely to result in the provision of both low-cost electronic, checking or other types of accounts, and expanded access to ATMs, to such individuals; (3) demonstrates that costs to be incurred by low- and moderate-income individuals are the least necessary to achieve goals; and (4) actively involves employers of unbanked low- and moderate-income individuals): 20 points maximum

(b) The Reasonableness of Approach Criterion (the extent to which project activities demonstrate a well-researched and well-reasoned approach toward expanding the provision of financial products and services to unbanked low- and moderate-income individuals): 20 points maximum.

(c) The Self-Sustaining Criterion (the extent to which the project activities can become self-supporting): 15 points maximum.

(d) The Model Qualities Criterion (the extent to which the project demonstrates a replicable framework on a national, regional, State, or local basis): 10 points maximum.

(e) The Timeliness Criterion (the extent of the speed in which the project will be rolled out and begin to achieve measurable, positive results): 10 points.

(f) The Performance Goal Setting Criterion (the extent to which the project has specific, measurable, and relevant performance goals): 10 points.

(g) The Experience/Track Record Criterion (the extent to which the applicant and other participating entities have previous experience on projects of a similar scale and scope, and have a track record of success in carrying out such projects): 10 points.

(h) The Management Capability Criterion (the extent to which the management team has the demonstrated ability to manage projects): 5 points.

In order to be considered eligible to advance to the next phase of substantive review, an applicant must receive a minimum score of 50 points.

Conditional Selection/Second Phase Review

Once the initial evaluation is completed, Treasury will determine which of those applications that received at least 50 points will be conditionally selected based on the Phase One scores and the amount of funds available. In addition, Treasury will seek to conditionally select a group of applicants whose projects are geographically diverse, *e.g.*, covering metropolitan, nonmetropolitan, and rural areas as well as different regions of the United States.

Once Treasury determines which applicants have been conditionally selected, Treasury will contact such applicants and may interview third parties to obtain clarifying or confirming information on each conditionally selected applicant. Once such information has been collected and analyzed, Treasury staff will make a recommendation to the Treasury selecting official who will make a final funding decision based on the applicant's file including, without limitation, Phase One evaluations and Phase Two recommendations, the amount of funds available, and geographic and institutional diversity considerations.

Award Requirements

Each awardee will be required to enter into a grant agreement with Treasury before it may begin project activities and receive a Treasury disbursement of grant funds. The terms and requirements for funding will be set forth in both a Notice of Award and the grant agreement. Some of these requirements are as follows:

(a) Grant funds can only be used for the purposes set forth in the grant agreement.

(b) Each awardee will be responsible for completing the project and expending the grant funds within the time period set forth in the grant agreement.

(c) Each awardee will be required to submit periodic reports and a final report to Treasury.

Authority: Pub. L. 106–554, 114 Stat. 2763, 2763A–126; Pub. L. 106–346, 114 Stat. 1356, 1356A–44; 31 U.S.C. 321.

Dated: December 17, 2001.

Sheila C. Bair,

Assistant Secretary for Financial Institutions.

[FR Doc. 01–31818 Filed 12–26–01; 8:45 am]

BILLING CODE 4810–25–P

DEPARTMENT OF THE TREASURY

Office of the Comptroller of the Currency

FEDERAL RESERVE SYSTEM

FEDERAL DEPOSIT INSURANCE CORPORATION

Agency Information Collection Activities: Submission for OMB Review; Joint Comment Request

AGENCY: Office of the Comptroller of the Currency (OCC), Treasury; Board of Governors of the Federal Reserve System (Board); and Federal Deposit Insurance Corporation (FDIC).

ACTION: Notice of information collection to be submitted to OMB for review and approval under the Paperwork Reduction Act of 1995.

SUMMARY: In accordance with the requirements of the Paperwork Reduction Act of 1995 (44 U.S.C. chapter 35), the OCC, the Board, and the FDIC (collectively, the ''agencies'') may not conduct or sponsor, and the respondent is not required to respond to, an information collection unless it displays a currently valid Office of Management and Budget (OMB) control number. On September 18, 2001, the agencies, under the auspices of the Federal Financial Institutions Examination Council (FFIEC), published a notice in the Federal Register (66 FR 48166) requesting public comment on the extension, without revision, of the currently approved information collection: Report on Indebtedness of Executive Officers and Principal Shareholders and their Related Interests to Correspondent Banks (FFIEC 004). The comment period for this notice expired on November 19, 2001. No comments were received. The agencies are now submitting requests to OMB for approval of the extension, without revision, of the FFIEC 004 report.

DATES: Comments must be submitted on or before January 28, 2002.

ADDRESSES: Interested parties are invited to submit written comments to any or all of the agencies. All comments should refer to the OMB control number(s) and will be shared among the agencies.

OCC: Written comments should be submitted to the Communications Division, Office of the Comptroller of the Currency, 250 E Street, S.W., Public Information Room, Mailstop 1–5, Attention: 1557–0070, Washington, D.C. 20219. In addition, comments may be sent by facsimile transmission to (202) 874–4448, or by electronic mail to regs.comments@occ.treas.gov. Comments will be available for inspection and photocopying at the OCC's Public Information Room, 250 E Street, S.W., Washington, D.C. 20219. Appointments for inspection of comments may be made by calling (202) 874–5043.

Board: Comments may be mailed to Ms. Jennifer J. Johnson, Secretary, Board of Governors of the Federal Reserve System, 20th Street and Constitution Avenue, N.W., Washington, DC 20551. However, because paper mail in the Washington area and at the Board of Governors is subject to delay, please consider submitting your comments by e–mail to regs.comments@federalreserve.gov, or faxing them to the Office of the Secretary at 202–452–3819 or 202–452–3102. Comments addressed to Ms. Johnson may also be delivered to the Board's mail facility in the West Courtyard between 8:45 a.m. and 5:15 p.m., located on 21st Street between Constitution Avenue and C Street, N.W. Members of the public may inspect comments in Room MP–500 between 9:00 a.m. and 5:00 p.m. on weekdays pursuant to 261.12, except as provided in 261.14, of the Board's Rules Regarding Availability of Information, 12 CFR 261.12 and 261.14.

FDIC: Written comments should be addressed to Robert E. Feldman, Executive Secretary, Attention: Comments/OES, Federal Deposit Insurance Corporation, 550 17th Street, N.W., Washington, D.C. 20429. Comments may be hand–delivered to the guard station at the rear of the 550 17th Street Building (located on F Street) on business days between 7:00 a.m. and 5:00 p.m. [FAX number (202) 898–3838; Internet address: comments@fdic.gov]. Comments may be inspected and photocopied in the FDIC Public Information Center, Room 100, 801 17th Street, N.W., Washington, D.C.,

between 9:00 a.m. and 4:30 p.m. on business days.

A copy of the comments may also be submitted to the OMB desk officer for the agencies: Alexander T. Hunt, Office of Information and Regulatory Affairs, Office of Management and Budget, New Executive Office Building, Room 3208, Washington, D.C. 20503.

FOR FURTHER INFORMATION CONTACT: Additional information or a copy of the collection may be requested from:

OCC: Jessie Dunaway, OCC Clearance Officer, or Camille Dixon, (202) 874–5090, Legislative and Regulatory Activities Division, Office of the Comptroller of the Currency, 250 E Street, S.W., Washington, D.C. 20219.

Board: Mary M. West, Federal Reserve Board Clearance Officer, (202) 452–3829, Division of Research and Statistics, Board of Governors of the Federal Reserve System, 20th and C Streets, N.W., Washington, D.C. 20551. Telecommunications Device for the Deaf (TDD) users may contact Capria Mitchell (202) 872-4984, Board of Governors of the Federal Reserve System, 20th and C Streets, N.W., Washington, D.C. 20551.

FDIC: Steven F. Hanft, FDIC Clearance Officer, (202) 898–3907, Office of the Executive Secretary, Federal Deposit Insurance Corporation, 550 17th Street N.W., Washington, D.C. 20429.

SUPPLEMENTARY INFORMATION:

Proposal to extend, without revision, the following currently approved collection of information:

Report Title: Report on Indebtedness of Executive Officers and Principal Shareholders and their Related Interests to Correspondent Banks
Form Number: FFIEC 004
Frequency of Response: Annually (for executive officers and principal shareholders), and on occasion (for national, state member and insured state nonmember banks)
Affected Public: Individuals or households, Businesses or other for–profit
For OCC:
OMB Number: 1557–0070
Number of Respondents: 25,300 (23,000 executive officers and principal shareholders fulfilling recordkeeping burden, 2,300 national banks fulfilling recordkeeping and disclosure burden)
Estimated Average Hours per Response: 2.25 hours
Estimated Total Annual Burden: 56,925 hours
For Board:
OMB Number: 7100–0034
Number of Respondents: 4,955 (3,964 executive officers and principal shareholders fulfilling recordkeeping burden, 991 state member banks fulfilling recordkeeping and disclosure burden)
Estimated Average Hours per Response: 1.12 hours
Estimated Total Annual Burden: 5,551 hours
For FDIC:
OMB Number: 3064–0023
Estimated Number of Respondents: 27,495 (21,996 executive officers and principal shareholders fulfilling recordkeeping burden, 5,499 insured state nonmember banks fulfilling recordkeeping and disclosure burden)
Estimated Average Hours per Response: 1.8 hours
Estimated Total Annual Burden: 49,491 hours
General Description of Report: This information collection is mandatory: 12 U.S.C. 1972(2)(G) (all); 12 U.S.C. 375(a)(6) and (10), and 375(b)(10) (Board); 12 CFR 31.2, 12 U.S.C. 1817(k) and 12 U.S.C. 93a (OCC); 12 CFR 349.3, 12 CFR 349.4, and 12 CFR 304.5(e) (FDIC). Copies of the reports in the possession of the agencies may be exempt from disclosure under sections (b)(4), (6), and (8) of the Freedom of Information Act (5 U.S.C. 552 (b)(4), (6), and (8)).

Abstract: Executive officers and principal shareholders of insured banks must file with the bank the information contained in the FFIEC 004 report on their indebtedness and that of their related interests to correspondent banks. The information contained in the FFIEC 004 report is prescribed by statute and regulation, as cited above. Banks must retain these reports or reports containing similar information and fulfill other recordkeeping requirements, such as furnishing annually a list of their correspondent banks to their executive officers and principal shareholders. Banks also have certain disclosure requirements for this information collection.

Current Actions: The agencies received no comments on their joint proposal to extend, without revision, the FFIEC 004 report, which was published on September 18, 2001 (66 FR 48166). The agencies are now submitting requests to OMB for approval of an extension, without revision, of this report. In their requests, the agencies are requesting an expiration date of March 31, 2004, which corresponds to the Office of Thrift Supervision's expiration date for the FFIEC 004 report.

Request for Comment

Comments are invited on:

a. Whether the information collections are necessary for the proper performance of the agencies' functions, including whether the information has practical utility;

b. The accuracy of the agencies' estimates of the burden of the information collections, including the validity of the methodology and assumptions used;

c. Ways to enhance the quality, utility, and clarity of the information to be collected;

d. Ways to minimize the burden of information collections on respondents, including through the use of automated collection techniques or other forms of information technology; and

e. Estimates of capital or start up costs and costs of operation, maintenance, and purchase of services to provide information.

Comments submitted in response to this notice will be shared among the agencies. All comments will become a matter of public record. Written comments should address the accuracy of the burden estimates and ways to minimize burden including the use of automated collection techniques or the use of other forms of information technology as well as other relevant aspects of the information collection request.

December 17, 2001.

Mark J. Tenhundfeld

Assistant Director, Legislative and Regulatory Activities Division, Office of the Comptroller of the Currency

Board of Governors of the Federal Reserve System, December 19, 2001.

Jennifer J. Johnson

Secretary of the Board

Dated at Washington, D.C., this 14th day of December 12, 2001.
Federal Deposit Insurance Corporation.

Robert E. Feldman

Executive Secretary

[FR Doc. 01–31694 Filed 12–26–01; 8:45 am]

BILLING CODES OCC: 4810–33–S 1/3; Board: 6210–01-S 1/3; FDIC: 6714–01–S 1/3

DEPARTMENT OF VETERANS AFFAIRS

[OMB Control No. 2900–0507]

Agency Information Collection Activities Under OMB Review

AGENCY: Veterans Benefits Administration, Department of Veterans Affairs.

ACTION: Notice.

SUMMARY: In compliance with the Paperwork Reduction Act (PRA) of 1995 (44 U.S.C., 3501 *et seq.*), this notice announces that the Veterans Benefits Administration (VBA), Department of

Veterans Affairs, has submitted the collection of information abstracted below to the Office of Management and Budget (OMB) for review and comment. The PRA submission describes the nature of the information collection and its expected cost and burden; it includes the actual data collection instrument.

DATES: Comments must be submitted on or before January 28, 2002.

FOR FURTHER INFORMATION OR A COPY OF THE SUBMISSION CONTACT: Denise McLamb, Information Management Service (045A4), Department of Veterans Affairs, 810 Vermont Avenue, NW, Washington, DC 20420, (202) 273–8030, FAX (202) 273–5981 or e-mail: *denise.mclamb@mail.va.gov.* Please refer to ''OMB Control No. 2900–0507.''

SUPPLEMENTARY INFORMATION:

Title: Medical Information for Reinstatement, VA Form Letter 29–762.

OMB Control Number: 2900–0507.

Type of Review: Extension of a currently approved collection.

Abstract: The form letter is used by the veteran's attending physician to supply medical information that is required to determine eligibility for reinstatement of insurance and/or Total Disability Income Provision.

An agency may not conduct or sponsor, and a person is not required to respond to a collection of information unless it displays a currently valid OMB control number. The **Federal Register** Notice with a 60-day comment period soliciting comments on this collection of information was published on September 6, 2001, at page 46684.

Affected Public: Individuals or households.

Estimated Annual Burden: 240 hours.

Estimated Average Burden Per Respondent: 30 minutes.

Frequency of Response: On occasion.

Estimated Number of Respondents: 480.

Send comments and recommendations concerning any aspect of the information collection to VA's OMB Desk Officer, OMB Human Resources and Housing Branch, New Executive Office Building, Room 10235, Washington, DC 20503 (202) 395–7316. Please refer to ''OMB Control No. 2900–0507'' in any correspondence.

Dated: December 11, 2001.

By direction of the Secretary.

Donald L. Neilson,

Director, Information Management Service.

[FR Doc. 01–31823 Filed 12–26–01; 8:45 am]

BILLING CODE 8320–01–P

DEPARTMENT OF VETERANS AFFAIRS

[OMB Control No. 2900–0105]

Agency Information Collection Activities Under OMB Review

AGENCY: Veterans Benefits Administration, Department of Veterans Affairs.

ACTION: Notice.

SUMMARY: In compliance with the Paperwork Reduction Act (PRA) of 1995 (44 U.S.C., 3501 et seq.), this notice announces that the Veterans Benefits Administration (VBA), Department of Veterans Affairs, has submitted the collection of information abstracted below to the Office of Management and Budget (OMB) for review and comment. The PRA submission describes the nature of the information collection and its expected cost and burden; it includes the actual data collection instrument.

DATES: Comments must be submitted on or before January 31, 2002.

FOR FURTHER INFORMATION OR A COPY OF THE SUBMISSION CONTACT: Denise McLamb, Information Management Service (045A4), Department of Veterans Affairs, 810 Vermont Avenue, NW., Washington, DC 20420, (202) 273–8030, FAX (202) 273–5981 or e-mail: *denise.mclamb@mail.va.gov.* Please refer to ''OMB Control No. 2900–0105.''

SUPPLEMENTARY INFORMATION:

Title: Statement of Witness to Accident, VA Form Letter 21–806.

OMB Control Number: 2900–0105.

Type of Review: Extension of a currently approved collection.

Abstract: The form letter is used to gather information to support veterans' claims for disability benefits based on disability(ies) which is/are the result of an accident. The information given by a witness to the accident is used as a source to gather specific data regarding the accident and to obtain from the witness opinions as well as facts based on his or her own knowledge and beliefs regarding the accident. Benefits may be paid if a disability is incurred in the line of duty and is not the result of the veteran's own willful misconduct.

An agency may not conduct or sponsor, and a person is not required to respond to a collection of information unless it displays a currently valid OMB control number. The **Federal Register** Notice with a 60-day comment period soliciting comments on this collection of information was published on September 25, 2001, on page 49068.

Affected Public: Individuals or households.

Estimated Annual Burden: 4,400 hours.

Estimated Average Burden Per Respondent: 20 minutes.

Frequency of Response: On occasion.

Estimated Number of Respondents: 13,200.

Send comments and recommendations concerning any aspect of the information collection to VA's OMB Desk Officer, OMB Human Resources and Housing Branch, New Executive Office Building, Room 12035, Washington, DC 20503 (202) 395–7316. Please refer to ''OMB Control No. 2900–0105'' in any correspondence.

Dated: December 11, 2001.

By direction of the Secretary:

Donald L. Neilson,

Director, Information Management Service.

[FR Doc. 01–31824 Filed 12–26–01; 8:45 am]

BILLING CODE 8320–01–P

DEPARTMENT OF VETERANS AFFAIRS

[OMB Control No. 2900–0153]

Agency Information Collection Activities Under OMB Review

AGENCY: Veterans Benefits Administration, Department of Veterans Affairs

ACTION: Notice.

SUMMARY: In compliance with the Paperwork Reduction Act (PRA) of 1995 (44 U.S.C., 3501 *et seq.*), this notice announces that the Veterans Benefits Administration (VBA), Department of Veterans Affairs, has submitted the collection of information abstracted below to the Office of Management and Budget (OMB) for review and comment. The PRA submission describes the nature of the information collection and its expected cost and burden; it includes the actual data collection instrument.

DATES: Comments must be submitted on or before January 28, 2002.

FOR FURTHER INFORMATION OR A COPY OF THE SUBMISSION CONTACT: Denise McLamb, Information Management Service (045A4), Department of Veterans Affairs, 810 Vermont Avenue, NW, Washington, DC 20420, (202) 273–8015, FAX (202) 273–5981 or e-mail: *denise.mclamb@mail.va.gov.* Please refer to ''OMB Control No. 2900–0153.''

SUPPLEMENTARY INFORMATION:

Title: Disability Benefits Questionnaire, VA Forms 29–8313 and 29–8313–1.

OMB Control Number: 2900–0153.

Type of Review: Extension of a currently approved collection.

Abstract: The forms are used by the policyholder to report conditions

needed to continue disability insurance benefits. The information is used by VA to determine the insured's continuous entitlement to disability insurance benefits.

An agency may not conduct or sponsor, and a person is not required to respond to a collection of information unless it displays a currently valid OMB control number. The **Federal Register** Notice with a 60-day comment period soliciting comments on this collection of information was published on September 17, 2001, at page 48077.

Affected Public: Individuals or households.

Estimated Annual Burden: 15,000 hours.

Estimated Average Burden Per Respondent: 15 minutes.

Frequency of Response: On occasion.

Estimated Number of Respondents: 60,000.

Send comments and recommendations concerning any aspect of the information collection to VA's OMB Desk Officer, OMB Human Resources and Housing Branch, New Executive Office Building, Room 10235, Washington, DC 20503 (202) 395–7316. Please refer to ''OMB Control No. 2900–0153'' in any correspondence.

Dated: December 11, 2001.

By direction of the Secretary

Donald L. Neilson,

Director, Information Management Service.

[FR Doc. 01–31825 Filed 12–26–01; 8:45 am]

BILLING CODE 8320–01–P

DEPARTMENT OF VETERANS AFFAIRS

[OMB Control No. 2900–0038]

Agency Information Collection Activities Under OMB Review

AGENCY: Veterans Benefits Administration, Department of Veterans Affairs.

ACTION: Notice.

SUMMARY: In compliance with the Paperwork Reduction Act (PRA) of 1995 (44 U.S.C., 3501 *et seq.*), this notice announces that the Veterans Benefits Administration (VBA), Department of Veterans Affairs, has submitted the collection of information abstracted below to the Office of Management and Budget (OMB) for review and comment. The PRA submission describes the nature of the information collection and its expected cost and burden; it includes the actual data collection instrument.

DATES: Comments must be submitted on or before January 28, 2002.

FOR FURTHER INFORMATION OR A COPY OF THE SUBMISSION CONTACT: Denise McLamb, Information Management Service (045A4), Department of Veterans Affairs, 810 Vermont Avenue, NW, Washington, DC 20420, (202) 273–8030, FAX (202) 273–5981 or e-mail: *denise.mclamb@mail.va.gov.* Please refer to ''OMB Control No. 2900–0038.''

SUPPLEMENTARY INFORMATION:

Title: Information From Remarried Widow/er, VA Form 21–4103.

OMB Control Number: 2900–0038.

Type of Review: Extension of a currently approved collection.

Abstract: The form is used to determine if a child's income and net worth are within the limits imposed by law. This information is necessary to determine a child's pension eligibility and benefit rates once a surviving spouse remarries.

An agency may not conduct or sponsor, and a person is not required to respond to a collection of information unless it displays a currently valid OMB control number. The **Federal Register** Notice with a 60-day comment period soliciting comments on this collection of information was published on July 6, 2001, at pages 35699—35700.

Affected Public: Individuals or households.

Estimated Annual Burden: 3,000 hours.

Estimated Average Burden Per Respondent: 20 minutes.

Frequency of Response: On occasion.

Estimated Number of Respondents: 9,000.

Send comments and recommendations concerning any aspect of the information collection to VA's OMB Desk Officer, OMB Human Resources and Housing Branch, New Executive Office Building, Room 10235, Washington, DC 20503 (202) 395–7316. Please refer to ''OMB Control No. 2900–0038'' in any correspondence.

Dated: December 13, 2001.

By direction of the Secretary.

Donald L. Neilson,

Director, Information Management Service.

[FR Doc. 01–31826 Filed 12–26–01; 8:45 am]

BILLING CODE 8320–01–P

DEPARTMENT OF VETERANS AFFAIRS

[OMB Control No. 2900–0139]

Agency Information Collection Activities Under OMB Review

AGENCY: Veterans Benefits Administration, Department of Veterans Affairs

ACTION: Notice.

SUMMARY: In compliance with the Paperwork Reduction Act (PRA) of 1995 (44 U.S.C., 3501 et seq.), this notice announces that the Veterans Benefits Administration (VBA), Department of Veterans Affairs, has submitted the collection of information abstracted below to the Office of Management and Budget (OMB) for review and comment. The PRA submission describes the nature of the information collection and its expected cost and burden; it includes the actual data collection instrument.

DATES: Comments must be submitted on or before January 28, 2002.

FOR FURTHER INFORMATION OR A COPY OF THE SUBMISSION CONTACT: Denise McLamb, Information Management Service (045A4), Department of Veterans Affairs, 810 Vermont Avenue, NW, Washington, DC 20420, (202) 273–8030, FAX (202) 273–5981 or e-mail: *denise.mclamb@mail.va.gov.* Please refer to ''OMB Control No. 2900–0139.''

SUPPLEMENTARY INFORMATION: *Title:* Notice—Payment not Applied (Government Life Insurance), VA Form 29–4499A.

OMB Control Number: 2900–0139.

Type of Review: Extension of a currently approved collection.

Abstract: This notice solicits comments for information needed to determine eligibility to reinstate government life insurance.

An agency may not conduct or sponsor, and a person is not required to respond to a collection of information unless it displays a currently valid OMB control number. The **Federal Register** Notice with a 60-day comment period soliciting comments on this collection of information was published on October 3, 2001, at page 50502.

Affected Public: Individuals or households.

Estimated Annual Burden: 300 hours.

Estimated Average Burden Per Respondent: 15 minutes.

Frequency of Response: On occasion.

Estimated Number of Respondents: 1,200.

Send comments and recommendations concerning any aspect of the information collection to VA's OMB Desk Officer, OMB Human Resources and Housing Branch, New Executive Office Building, Room 10235, Washington, DC 20503 (202) 395–7316. Please refer to ''OMB Control No. 2900–0139'' in any correspondence.

Dated: December 13, 2001.

By direction of the Secretary.

Donald L. Neilson,

Director, Information Management Service.

[FR Doc. 01–31827 Filed 12–26–01; 8:45 am]

BILLING CODE 8320–01–P

DEPARTMENT OF VETERANS AFFAIRS

Rehabilitation Research and Development Service Scientific Merit Review Board, Notice of Meeting

The Department of Veterans Affairs gives notice under Public Law 92–463 (Federal Advisory Committee Act) as amended, by section 5(c) of Public Law 94–409 that a meeting of the Rehabilitation Research and Development Service Scientific Merit Review Board will be held at the Crowne Plaza Hotel, 1001 14th Street, NW, Washington, DC on January 23–24, 2002.

The sessions on January 23–24, 2002, are scheduled to begin at 8:00 a.m. and end at 6:30 p.m. The purpose of the meeting is to review rehabilitation research and development applications for scientific and technical merit and to make recommendations to the Director, Rehabilitation and Development Service, regarding their funding.

The meeting will be open to the public for the January 23 session from 8:00 a.m. to 9:00 a.m. for the discussion of administrative matters, the general status of the program, and the administrative details of the review process. On January 23 from 9:00 a.m. through January 24, 2002, the meeting is closed during which the Board will be reviewing research and development applications.

This review involves oral comments, discussion of site visits, staff and consultant critiques of proposed research protocols, and similar analytical documents that necessitate the consideration of the personal qualifications, performance and competence of individual research investigators. Disclosure of such information would constitute a clearly unwarranted invasion of personal privacy. Disclosure would also reveal research proposals and research underway which could lead to the loss of these projects to third parties and thereby frustrate future agency research efforts.

Thus, the closing is in accordance with 5 U.S.C. 552b(c)(6), and (c)(9)(B) and the determination of the Secretary of the Department of Veterans Affairs under Sections 10(d) of Public Law 92–92–463 as amended by Section 5(c) of Public Law 94–409.

Those who plan to attend the open session should write to Ms. Victoria Mongiardo, Program Analyst, Rehabilitation Research and Development Service (122P), Department of Veterans Affairs, 810 Vermont Ave. NW, Washington, DC 20420 (Phone: 202–408–3684) at least five days before the meeting.

Dated: December 17, 2001.

By the Direction of the Secretary.

Nora E. Egan,

Committee Management Officer.

[FR Doc. 01–31829 Filed 12–26–01; 8:45 am]

BILLING CODE 8320–01–M

Federal Register

Thursday,
December 27, 2001

Part II

Department of Defense
General Services Administration
National Aeronautics and Space Administration

48 CFR Chapter 1, et al.

Federal Acquisition Regulations; Final Rules

DEPARTMENT OF DEFENSE

GENERAL SERVICES ADMINISTRATION

NATIONAL AERONAUTICS AND SPACE ADMINISTRATION

48 CFR Chapter 1

Federal Acquisition Circular 2001–03; Introduction

AGENCIES: Department of Defense (DoD), General Services Administration (GSA), and National Aeronautics and Space Administration (NASA).

ACTION: Summary presentation of final rules.

SUMMARY: This document summarizes the Federal Acquisition Regulation (FAR) rules agreed to by the Civilian Agency Acquisition Council and the Defense Acquisition Regulations Council in this Federal Acquisition Circular (FAC) 2001–03. A companion document, the Small Entity Compliance Guide (SECG), follows this FAC. The FAC, including the SECG, is available via the Internet at *http://www.arnet.gov/far*.

DATES: For effective dates and comment dates, see separate documents which follow.

FOR FURTHER INFORMATION CONTACT: The FAR Secretariat, Room 4035, GS Building, Washington, DC 20405, (202) 501–4755, for information pertaining to status or publication schedules. For clarification of content, contact the analyst whose name appears in the table below in relation to each FAR case or subject area. Please cite FAC 2001–03 and specific FAR case number(s). Interested parties may also visit our Web site at *http://www.arnet.gov/far*.

Item	Subject	FAR case	Analyst
I	Contractor Responsibility, Labor Relations Costs, and Costs Relating to Legal and Other Proceedings.	1999–010 (Stay)	De Stefano.
II	Contractor Responsibility, Labor Relations Costs, and Costs Relating to Legal and Other Proceedings—Revocation.	2001–014	De Stefano.

SUPPLEMENTARY INFORMATION: Summaries for each FAR rule follow. For the actual revisions and/or amendments to these FAR cases, refer to the specific item number and subject set forth in the documents following these item summaries.

FAC 2001–03 amends the FAR as specified below:

Item I—Contractor Responsibility, Labor Relations Costs, and Costs Relating to Legal and Other Proceedings (FAR Case 1999–010 (Stay))

The Federal Acquisition Regulatory Council (FAR Council) published in the **Federal Register** at 65 FR 80255, December 20, 2000, a final rule addressing contractor responsibility and costs incurred in legal and other proceedings. After further review, the FAR Council published an interim rule in the **Federal Register** at 66 FR 17754, April 3, 2001, staying that rule. This final rule terminates the stay.

Item II—Contractor Responsibility, Labor Relations Costs, and Costs Relating to Legal and Other Proceedings— Revocation (FAR Case 2001–014)

The Federal Acquisition Regulatory Council (FAR Council) published in the **Federal Register** at 66 FR 17758, April 3, 2001, a proposed rule (April proposed rule) with a request for public comments. The April proposed rule proposed revoking a final rule published in the **Federal Register** at 65 FR 80255, December 20, 2000 (December final rule). The December final rule addressed responsibility and costs incurred in legal and other proceedings. This rule finalizes the April 3, 2001, proposed rule.

Dated: December 14, 2001.

Gloria M. Sochon,

Acting Director, Acquisition Policy Division.

Federal Acquisition Circular

Federal Acquisition Circular (FAC) 2001–03 is issued under the authority of the Secretary of Defense, the Administrator of General Services, and the Administrator for the National Aeronautics and Space Administration.

Unless otherwise specified, all Federal Acquisition Regulation (FAR) and other directive material contained in FAC 2001–03 is effective December 27, 2001.

Dated: December 13, 2001.

Deidre A. Lee,
Director, Defense Procurement.

Dated: December 13, 2001.

David A. Drabkin,
Deputy Associate Administrator, Office of Acquisition Policy, General Services Administration.

Dated: December 12, 2001.

Tom Luedtke,
Associate Administrator for Procurement, National Aeronautics and Space Administration.

[FR Doc. 01–31300 Filed 12–26–01; 8:45 am]

BILLING CODE 6820–EP–P

DEPARTMENT OF DEFENSE

GENERAL SERVICES ADMINISTRATION

NATIONAL AERONAUTICS AND SPACE ADMINISTRATION

48 CFR Parts 9, 14, 15, 31, and 52

[FAC 2001–03; FAR Case 1999–010 (Stay); Item I]

RIN 9000–AI40

Federal Acquisition Regulation; Contractor Responsibility, Labor Relations Costs, and Costs Relating to Legal and Other Proceedings

AGENCIES: Department of Defense (DoD), General Services Administration (GSA), and National Aeronautics and Space Administration (NASA).

ACTION: Final rule; termination of stay of final rule.

SUMMARY: The Federal Acquisition Regulatory Council (FAR Council) published in the **Federal Register** at 65 FR 80255, December 20, 2000, a final rule addressing contractor responsibility, labor relations costs, and costs incurred in legal and other proceedings. After further review, the FAR Council published an interim rule in the Federal Register at 66 FR 17754, April 3, 2001, staying that rule. The FAR Council intended the stay would last for 270 days from April 3, 2001, until December 29, 2001, or until finalization of the proposed rule (entitled ''Contractor Responsibility, Labor Relations Costs, and Costs Relating to Legal and Other Proceedings—Revocation) that was published in the **Federal Register** at 66

FR 17758, April 3, 2001, concurrently with the stay, whichever is sooner.

The FAR Council requested comments on the FAR interim rule-stay on the length of the stay. During the stay, the FAR text was restored to the text as it existed before January 19, 2001. In a separate document published concurrently with the interim rule-stay, the FAR Council published the aforementioned proposed rule, requesting comments under that FAR case on revoking the December 20, 2000, final rule.

This final rule terminates the stay.

DATES: *Effective Date:* December 27, 2001.

FOR FURTHER INFORMATION CONTACT: The FAR Secretariat, Room 4035, GS Building, Washington, DC, 20405, (202) 501–4755, for information pertaining to status or publication schedules. For clarification of content, contact Mr. Ralph De Stefano, Procurement Analyst, at (202) 501–1758. Please cite FAC 2001–03, FAR case 1999–010 (stay).

SUPPLEMENTARY INFORMATION:

A. Background

1. The Final Rule

The FAR Council published a proposed rule amending FAR Parts 9 and 31 in the **Federal Register** at 64 FR 37360, July 9, 1999. In response to the proposed rule, the FAR Council received more than 1500 letters.

After reviewing the public comments, the FAR Council decided to republish the proposed rule with certain changes. The FAR Council published a revised proposed rule amending FAR Parts 9, 14, 15, 31, and 52 in the **Federal Register** at 65 FR 40830, June 30, 2000. Over 300 public comments were received. The final rule, which was published in the **Federal Register** at 65 FR 80255 on December 20, 2000, had an effective date of January 19, 2001, 30 days from date of publication.

The final rule included the following revisions:

FAR Part 9

Added language stating that a satisfactory record of integrity and business ethics includes satisfactory compliance with the law including tax, labor and employment, environmental, antitrust, and consumer protection laws (FAR 9.104–1(d)). Required contracting officers to consider all relevant credible information but stated that the greatest weight must be given to offenses adjudicated within the past three years.

FAR Part 14 and 15

Directed contracting officers to notify offerors if the offerors were excluded based on a nonresponsibility determination.

FAR Part 31

At FAR 31.205–21, made unallowable those costs incurred for activities that assist, promote, or deter unionization.

At FAR 31.305–47, made unallowable those costs incurred in civil or administrative proceedings brought by a government where the contractor violated, or failed to comply with a law or regulation.

FAR Part 52

At FAR 52.209–5, amended the previous certification to require offerors to certify to additional violations (violations of tax, labor and employment, environmental, antitrust, or consumer protection laws) adjudicated within the last three years. It was a check-the-box certification. An offeror would have to provide additional detailed information only upon the request of the contracting officer.

At 52.212–3(h), made an equivalent change for the certification for commercial items.

2. The Lawsuit

The Business Roundtable, Chamber of Commerce of the United States, National Association of Manufacturers, Associated General Contractors of America, Inc., and Associated Builders and Contractors, Inc., filed a lawsuit in the United States District Court for the District of Columbia on December 22, 2000, seeking to overturn the final rule.

3. Letters

The FAR Council had received letters from major industry associations representing thousands of firms, and from Congressional Representatives, requesting an effective date extension of at least six months. Industry concerns extend especially to contractors' ability to comply with the rule's new certification requirements, which apply to procurements over $100,000.

4. Action

The FAR Council reassessed the advantages and disadvantages of the changes made by the December 20, 2000, final rule, to determine if the benefits of the rule are outweighed by the burdens imposed by the rule. In this regard, it was not clear to the FAR Council that there was a justification for including the added categories of covered laws in the rule and its implementing certification, that the rule provided contracting officers with sufficient guidelines to prevent arbitrary or otherwise abusive implementation, or that the final rule was justified from a cost-benefit perspective. In a proposed rule published concurrently with the interim rule-stay, the FAR Council requested public comments on revoking the final rule. In the interim rule-stay, the FAR Council determined that the 30-day effective date did not give contractors, and the Government, sufficient time to meet the new obligations and responsibilities imposed by the final rule. Government contracting officers did not have sufficient training. Offerors did not have sufficient time to establish a system to track compliance with applicable laws and keep it current, in order to be able to properly fill out the certification. Although there was language in the noncommercial items certification, which assured contractors that no system of records needed to be established to render the certification in good faith, this language is not found in the commercial items certification. There are criminal penalties for a false certification (18 U.S.C. 1001). The FAR Council recognized that it will take more time than it anticipated for businesses to put the systems in place. Therefore, the FAR Council decided to stay the final rule of December 20, 2000. The FAR Council intended the stay to last for 270 days from the date of publication of the interim rule until December 29, 2001, or until finalization of the proposed rule that was published concurrently with the interim rule-stay, whichever is sooner.

The final rule had only been in effect since January 19, 2001. There had not been time for the public to be in a position of reliance upon the rule's existence. The previous FAR sections that were in effect, such as the previous version of the certification, were restored by this interim rule-stay.

The requirement that contractors must be responsible is statutory, and the stay did not relieve offerors of the requirement to have a satisfactory record of integrity and business ethics. Contracting officers continued to have the authority and duty to make responsibility decisions. Agency debarring officials continued to have the authority and duty to make determinations whether to suspend and debar a contractor. The Government still needed the information contained in the previous certifications, which covered such things as whether the contractor or its principals are presently debarred, or had a felony conviction for contract fraud.

The stay was not intended to be a statement that violations of the additional laws discussed in the December 20, 2000, rule could not have

been considered in the past, or could not be considered in the future, by contracting officers or agency debarring officials.

The FAR Council invited comments on the two rules. In the interim rule-stay, FAR Case 1999–010, comments were requested on the length of the stay. Ninety-eight public comments were received. Ninety-one public comments, 93 percent of the public comments, generally supported the interim rule-stay. All comments were considered in the finalization of the interim rule-stay. The FAR Council has determined to finalize the stay to terminate with the publication of the finalization of the accompanying proposed rule revoking the December rule. In an accompanying final rule, FAR case 2001–014, published concurrently with this rule, the final rule revokes the December 2000 rule.

When staying Code of Federal Regulations text, if the previous text is restored, the **Federal Register** requires different numbering from the stayed text. The stayed text uses the numbering that was published in Federal Acquisition Circular 97–21. The revised numbering of the restored text is not a substantive change. Terminating the stay reverses this process and is also not a substantive change.

This is a significant rule and was subject to Office of Management and Budget review under Section 6(b) of Executive Order 12866, Regulatory Planning and Review, dated September 30, 1993. This rule is not a major rule under 5 U.S.C. 804.

B. Regulatory Flexibility Act

The Department of Defense, the General Services Administration, and the National Aeronautics and Space Administration certify that this final rule will not have a significant economic impact on a substantial number of small entities within the meaning of the Regulatory Flexibility Act, 5 U.S.C. 601, *et seq.*, because the action terminates stayed FAR revisions implemented under FAR case 1999–010 published in the **Federal Register** on December 20, 2000 (65 FR 80255), that did not have a significant economic impact on a substantial number of small entities.

C. Paperwork Reduction Act

The Paperwork Reduction Act does not apply because the changes to the FAR do not impose information collection requirements that require the approval of the Office of Management and Budget under 44 U.S.C. 3501, *et seq.*

List of Subjects in 48 CFR Parts 9, 14, 15, 31, and 52

Government procurement.

Dated: December 14, 2001.

Gloria M. Sochon,

Acting Director, Acquisition Policy Division.

Accordingly, the interim rule (stay) published in the **Federal Register** at 66 FR 17754, April 3, 2001, is terminated, and DoD, GSA, and NASA further amend 48 CFR parts 9, 14, 15, 31, and 52 as set forth below:

1. The authority citation for 48 CFR parts 9, 14, 15, 31, and 52 continues to read as follows:

Authority: 40 U.S.C. 486(c); 10 U.S.C. chapter 137; and 42 U.S.C. 2473(c).

PART 9—CONTRACTOR QUALIFICATIONS

9.103 [Amended]

2. Amend section 9.103 by removing paragraph (c); and by redesignating paragraph (d) as paragraph (c).

9.104–1 [Amended]

3. Amend section 9.104–1 by removing paragraph (e); and by redesignating paragraphs (f), (g), and (h) as (e), (f), and (g), respectively.

PART 14—SEALED BIDDING

14.404–2 [Amended]

4. Amend section 14.404–2 by removing paragraph (j); and by redesignating paragraphs (k), (l), and (m) as (j), (k), and (l), respectively.

PART 15—CONTRACTING BY NEGOTIATION

15.503 [Amended]

5. Amend section 15.503 by removing paragraph (a)(2), and by redesignating paragraph (a)(3) as (a)(2).

PART 31—CONTRACT COST PRINCIPLES AND PROCEDURES

31.205–47 [Amended]

6. Amend section 31.205–47 in paragraph (a) by removing the definition ''Fraud''; by removing paragraph (b)(3); and by redesignating paragraphs (b)(4), (b)(5), and (b)(6), as (b)(3), (b)(4), and (b)(5), respectively.

PART 52—SOLICITATION PROVISIONS AND CONTRACT CLAUSES

52.209–5 [Amended]

7. Amend section 52.209–5 by removing paragraphs (a)(1)(i)(D) and (a)(1)(i)(E).

52.212–3 [Amended]

8. Amend section 52.212–3 by removing paragraph (i); and by redesignating paragraph (j) as (i).

[FR Doc. 01–31301 Filed 12–26–01; 8:45 am]

BILLING CODE 6820–EP–P

DEPARTMENT OF DEFENSE

GENERAL SERVICES ADMINISTRATION

NATIONAL AERONAUTICS AND SPACE ADMINISTRATION

48 CFR Parts 9, 14, 15, 31, and 52

[FAC 2001–03; FAR Case 2001–014; Item II]

RIN 9000–AJ10

Federal Acquisition Regulation; Contractor Responsibility, Labor Relations Costs, and Costs Relating to Legal and Other Proceedings—Revocation

AGENCIES: Department of Defense (DoD), General Services Administration (GSA), and National Aeronautics and Space Administration (NASA).

ACTION: Final rule.

SUMMARY: The Federal Acquisition Regulatory Council (FAR Council) published in the **Federal Register** at 66 FR 17758, April 3, 2001, a proposed rule (April proposed rule) with request for public comment. The April proposed rule proposed revoking a final rule published in the **Federal Register** at 65 FR 80255, December 20, 2000 (December final rule). The December final rule addressed responsibility, labor relations costs, and costs incurred in legal and other proceedings. This rule finalizes the aforementioned April proposed rule.

An interim FAR rule was published in the **Federal Register** at 66 FR 17754, April 3, 2001, concurrently with the April proposed rule. The interim rule immediately stayed the December final rule (under FAR case 1999–010, Responsibility, Labor Relations Costs, and Costs Relating to Legal and Other Proceedings). During the stay, the FAR text was restored to the text as it existed before January 19, 2001. The FAR Council intended the stay to last for 270 days from April 3, 2001 (December 29, 2001), or until finalization of the April proposed rule, whichever was sooner. In a separate document being published elsewhere in this issue, the FAR Council is terminating the stay.

The FAR Council published in the **Federal Register** at 66 FR 23134, May 7, 2001, an extension of the April

proposed rule public comment period from June 4, 2001, to July 6, 2001, and a notice of a public meeting on the April proposed rule, which was conducted on June 18, 2001.

DATES: *Effective Date:* December 27, 2001.

FOR FURTHER INFORMATION CONTACT: The FAR Secretariat, Room 4035, GS Building, Washington, DC, 20405, (202) 501–4755, for information pertaining to status or publication schedules. For clarification of content, contact Mr. Ralph De Stefano, Procurement Analyst, at (202) 501–1758. Please cite FAC 2001–03, FAR case 2001–014.

SUPPLEMENTARY INFORMATION:

A. Background

1. The Final Rule

The final rule published in the **Federal Register** at 65 FR 80255 (December final rule) included the following revisions:

FAR Part 9

At FAR 9.104–1(d), added language stating that a satisfactory record of integrity and business ethics includes satisfactory compliance with the law including tax, labor and employment, environmental, antitrust, and consumer protection laws.

At FAR 9.104–3(c), required contracting officers to consider all relevant credible information but stated that the greatest weight must be given to offenses adjudicated within the past three years.

FAR Parts 14 and 15

At 14.404–2(i) and 15.503(a)(1), directed contracting officers to notify offerors if the offerors were excluded based on a nonresponsibility determination.

FAR Part 31

At FAR 31.205–21, made unallowable those costs incurred for activities that assist, promote, or deter unionization.

At FAR 31.305–47, made unallowable those costs incurred in civil or administrative proceedings brought by a government where the contractor violated, or failed to comply with, a law or regulation.

FAR Part 52

At FAR 52.209–5, amended the previous certification to require offerors to certify to additional violations (violations of tax, labor and employment, environmental, antitrust, or consumer protection laws) adjudicated within the last three years. It was a check-the-box certification. An offeror would have to provide additional detailed information only upon the request of the contracting officer.

At 52.212–3(h), made an equivalent change for the certification for commercial items.

2. The Stay

The interim rule published at 66 FR 17754, April 3, 2001, immediately stayed the December final rule and also requested public comment. During the stay, the FAR text was restored to the text, as it existed before January 19, 2001. The FAR Council intended the stay to last for 270 days from April 3, 2001 (December 29, 2001), or until finalization of the April proposed rule, whichever is sooner. In a separate document being published today elsewhere in this issue, the FAR Council is terminating the stay.

The FAR Council determined that the December final rule 30-day effective date did not give contractors, and the Government, sufficient time to meet the new obligations and responsibilities imposed by the final rule. Government contracting officers had not had sufficient training.

Offerors had not had sufficient time to establish a system to track compliance with applicable laws and keep it current, in order to be able to properly fill out the certification. Although there is language in the noncommercial items certification, which assures contractors that no system of records needs to be established to render the certification in good faith, this language was not found in the commercial items certification. There are criminal penalties for a false certification (18 U.S.C. 1001). The FAR Council recognized that it would take more time than it anticipated for businesses to put the systems in place. Ninety-eight comments were received on the stay.

3. Extension of Public Comment Period and Public Meeting

The FAR Council published in the **Federal Register** at 66 FR 23134, May 7, 2001, an extension of the April proposed rule public comment period from June 4, 2001, to July 6, 2001, to ensure potential commentors had adequate time to prepare their comments, and a notice of a public meeting on June 18, 2001, to ensure an open dialogue between the Government and interested parties on the April proposed rule. Twenty-seven individuals and organizations presented at the public meeting.

4. Reconsideration

Under the April proposed rule, the FAR Council reassessed the advantages and disadvantages of the changes made by the December 20, 2000, final rule, to determine if the benefits of the rule are outweighed by the burdens imposed by the rule. In this regard, it was not clear to the FAR Council that there is a justification for including the added categories of covered laws in the rule and its implementing certification, that the rule provided contracting officers with sufficient guidelines to prevent arbitrary or otherwise abusive implementation, or that the final rule was justified from a cost-benefit perspective.

The FAR Council realized that there was a high degree of controversy about the merits of the December final rule (there were 1800 public comments). The typical FAR rule generates about 1 percent of that amount. The two proposed rules that resulted in the December final rule were the most controversial ever published by the FAR Council. Adverse comments were made by individuals within the Government itself, as well as by the public.

After the publication of the December final rule, the FAR Council continued to receive information that the December final rule was not in the best interests of industry or the Government. The FAR Council wanted to be responsive to the needs of the contracting community, and therefore continued a dialog about the rule. Some 4698 public comments were received in response to the April 3, 2001, proposed rule. All comments were considered in the formulation of the final rule (see Section 5 of this preamble). The FAR Council has determined that the December final rule should be revoked in its entirety.

With the revocation of the December final rule, contracting officers will continue to have the authority and duty to make responsibility decisions. Agency debarring officials will continue to have the authority and duty to make determinations whether to suspend and debar a contractor. The requirement that contractors must be responsible is statutory. Offerors must have a satisfactory record of integrity and business ethics.

The FAR Council fully supports the proposition that Government contracts should be awarded to law-abiding entities. Entities whose behavior reflects negatively on their responsibility have always been subject to scrutiny and the possibility of being disqualified for award of Government contracts. In fact, the very last thing a contracting officer must do before awarding a Government contract is determine whether the company is responsible. This requirement has been a long-standing policy and process of Government

contracting dating prior to the Civil War. Ferreting out companies who are not responsible has been a responsibility shared by a number of individuals in the Government's contracting process. The FAR Council supports the principle that the Government should do business only with those entities willing and able to comply with the laws enumerated in the December final rule.

After reviewing the public comments submitted in response to the proposed revocation of the December final rule (66 FR 17758, April 3, 2001), it is clear that there is a conviction held by people at many levels and many walks of life that the Government should conduct its business with corporations that adhere to the law. The problem lies in the means to ensure that the entities with which the Government conducts its business are good citizens and adhere to the myriad of regulations and laws. In other words, we support the objective but find the vehicle unworkable and defective.

The FAR Council finds that the current regulations governing suspension and debarment provide adequate protection to address serious threats of waste, fraud, abuse, poor performance, and noncompliance. Any one of these concerns may authorize suspension or debarment under appropriate conditions and circumstances, subject to judicial review.

The FAR Council reminds members of the general public that anyone may submit to an agency debarment official relevant information about the responsibility of a company seeking to do business with the Government. Debarment and suspension provides a means of getting adverse information to appropriate Government officials with appropriate procedures, knowledge, and skills to review and take appropriate action in such matters. This process also provides subjects of those actions with due process procedures that will withstand judicial scrutiny. The outcome of these reviews have Governmentwide applicability within the executive branch.

The existing debarment process provides the authority for at least one official in an executive agency which procures goods or services with appropriated funds under the FAR, to be responsible for reviewing the behavior of contractors to determine whether that company is sufficiently responsible to continue doing business with the Government. That official is the agency debarring official. The agency debarring official is typically located at the agency's headquarters. This individual is typically a senior official of the agency familiar with a variety of issues that affect contractor responsibility and supported by a staff including the agency's general counsel. The debarring official is authorized to consider a company's responsibility at any time, whether the company is a current competitor for a Government contract or not. Should the debarring official determine that the company is not responsible, the debarring official may impose a debarment of the company. This debarment is effective with regard to all Federal agencies and many state and local governments as well who choose to use the debarment list as their own. The suspension and debarment rules contain well established and defined decision-making criteria and due process safeguards, which have evolved through case law precedent and agency practices.

When a question of a company's honesty and integrity is raised, reliance on the debarment and suspension remedies provides effective intervention. This remedy provides consistent application of a determination across the enterprise of Government and will assure that officials with both the training and expertise will consider and resolve these matters. There are some 50 causes upon which entities may be found ineligible to conduct business including business done under nonprocurement transactions under the Governmentwide Debarment and Suspension (Nonprocurement) and Governmentwide Requirements for Drug-Free Workplace (Grants) rules; otherwise known as the Common Rule for Suspension and Debarment.

5. Summary of Public Comments

Below is a summary of the issues raised in the public comments:

''The Government ought not do business with lawbreakers'' was a common thread in the sentiment expressing support for the December final rule. The FAR Council agrees with this statement. Only doing business with law abiding contractors provides a positive incentive for voluntary compliance with tax, environmental, labor, civil rights, and consumer laws, as well as criminal laws involving contracting and certain other kinds of business activities. The debarment regulations provide a highly effective remedy for appropriately excluding those who cannot or will not comply with the law, especially where there is a demonstrated lack of business integrity or honesty.

The December final rule flies in the face of long-standing policy of neutrality in labor-management disputes. Technically, the language in the December final rule does not require a change in the policy of impartiality in labor-management disputes. In practice, the December final rule could undermine the longstanding policy of neutrality in labor-management disputes.

The December final rule requires contracting officers to perform a function, which they lack the experience, procedures, and resources to perform. Contracting officers are not experts in tax laws, labor and employment laws, environmental laws, antitrust laws, and consumer protection laws. This lack of expertise would create a problem rather than solving a problem. Contracting officers are not the appropriate individuals to make decisions regarding satisfactory compliance with the law.

The requirement in the December final rule to consult with legal counsel before finding a prospective contractor nonresponsible does not resolve this issue. Legal counsel may not be an expert in the covered laws under review in the instant fact situation. An agency suspension and debarment authority has the requisite knowledges and skills combined with the required procedures and resources to use the information to support suspension and debarment decisions.

De facto debarment could occur under the December final rule. In some cases, repeated nonresponsibility findings based on the same facts, within the same agency, could be considered a de facto debarment. The suspension and debarment rules contain well established and defined decision-making criteria and due process safeguards, which have evolved through case law precedent and agency practices.

The December final rule's wording is unclear and provides insufficient guidance for contracting officers. There is no guidance to contracting officers to ensure consistent application. Contracting officers could make disparate nonresponsibility determinations. The hierarchy establishing the priority and weight to be given to various types of evidence does not resolve this issue.

Sufficient enforcement regulations already existed before the December final rule. The Government has sufficient regulations to address contractor responsibility. Among other things, debarment rules provide for existing and appropriate remedies with sufficient due process safeguard for addressing conduct adversely reflecting on business honesty and integrity. Also,

for example, under statutory schemes, determinations in the area of worker health and safety, failure to pay minimum wages, or violations of other worker protection laws lie within the purview of the Department of Labor. This approach ensures consistency Governmentwide.

The certification under the December final rule is burdensome. The certification is contrary to the intent of the Federal Acquisition Streamlining Act of 1994 and the Clinger-Cohen Act of 1996 because it imposes an unnecessary requirement with little or no offsetting commensurate benefit. Moreover, agencies lack the resources and expertise to effectively use the information received under the certification.

The December final rule undermines competition. Contactors may be unwilling to spend money to submit offers unless they can ascertain the basis by which responsibility determinations will be made with some degree of exactness and objectivity. As stated above, the December final rule's wording is unclear and provides insufficient guidance for contracting officers.

After reviewing the public comments in response to the proposed revocation of the December rule, it is clear that there is a conviction held by people at many levels and many walks of life that the Government should conduct its business with entities that adhere to the law. The FAR Council agrees that the Government should not do business with lawbreakers. The problem lies in the means to ensure that the entities with which the Government conducts business are good corporate citizens and adhere to the myriad of regulations and laws. The FAR Council has determined that the suspension and debarment process is the proper vehicle to accomplish this goal. The suspension and debarment rules contain well-established and defined decision-making criteria and due process safeguards, which have evolved through case law precedent and agency practices.

This rule is a significant rule and was subject to Office of Management and Budget review under Section 6(b) of Executive Order 12866, Regulatory Planning and Review, dated September 30, 1993. This rule is not a major rule under 5 U.S.C. 804.

B. Regulatory Flexibility Act

The Department of Defense, the General Services Administration, and the National Aeronautics and Space Administration certify that this final rule will not have a significant economic impact on a substantial number of small entities within the meaning of the Regulatory Flexibility Act, 5 U.S.C. 601, *et seq.*, because the rule will eliminate FAR revisions implemented under FAR case 1999–010 published in the **Federal Register** on December 20, 2000 (65 FR 80255), that did not have a significant economic impact on a substantial number of small entities.

C. Paperwork Reduction Act

The Paperwork Reduction Act (Pub. L. 104–13) applies because the FAR changes to Parts 9 and 52 decrease the information collection requirements that the Office of Management and Budget (OMB) approved under OMB Control Number 9000–0094. un

The FAR Council estimates that the annual reporting burden for OMB Control Number 9000–0094 applies to 89,995 respondents, of which approximately 50,000 would be affected by the modified certification requirement. The 39,995 subcontractors that respond to inquiries from the prime contractor regarding debarment, suspension, or proposed debarment are not affected by the modified certification requirements. The total estimated responses of 500,000 per year are not affected by the modified certification requirements.

The FAR Council estimates that the modified certification requirement would reduce the total burden by 505,000 hours, changing the total from 596,667 to 91,667. This is based on an estimate of 50,000 respondents and 500,000 responses per year. The FAR Council estimates that the modified certification would take an average of 1 hour less for each of the 50,000 initial responses and .3 hours less for each of the 450,000 subsequent responses that year, for a total of 185,000 hours less to respond to the modified certification requirements. The FAR Council further estimates that in many acquisitions, the contracting officer only would have requested additional information if the otherwise apparently successful offeror had certified affirmatively. However, the FAR Council estimates, in some source selections, the contracting officer would have requested such information from all offerors in the competitive range that certified affirmatively. Therefore, we estimate a reduced burden of 140,000 hours for providing additional information. This is based on a burden estimate of 4 hours per initial response and 1 hour per subsequent response, for a total of 140,000 hours for providing additional information. The FAR Council further estimates an additional reduction of 180,000 annual recordkeeping hours based on an estimated average of 6 hours per year for recordkeeping for each of the 30,000 respondents to respond to the request for additional information.

The revised annual reporting burden is estimated as follows:

Respondents: 89,995.
Responses Per Respondent: 12.22.
Total Annual Responses: 1,100,000.
Average Hours Per Response: .083.*
Total Burden Hours: 91,667 hours.

*Average hours per response is calculated by dividing total burden hours by total annual responses.

The Paperwork Reduction Act does not apply to FAR part 31 cost principles changes because the changes do not impose information collection requirements that require Office of Management and Budget approval under 44 U.S.C. 3501, *et seq.*

List of Subjects in 48 CFR Parts 9, 14, 15, 31, and 52

Government procurement.

Dated: December 14, 2001.

Gloria M. Sochon,

Acting Director, Acquisition Policy Division.

Therefore, DoD, GSA, and NASA amend 48 CFR parts 9, 14, 15, 31, and 52 as stayed effective April 3, 2001, as set forth below:

1. The authority citation for 48 CFR parts 9, 14, 15, 31, and 52 continues to read as follows:

Authority: 40 U.S.C. 486(c); 10 U.S.C. chapter 137; and 42 U.S.C. 2473(c).

PART 9—CONTRACTOR QUALIFICATIONS

9.103 [Amended]

2. Amend section 9.103 in paragraph (b) by removing the third sentence.

3. Amend section 9.104–1 by revising paragraph (d) to read as follows:

9.104–1 General standards.

(d) Have a satisfactory record of integrity and business ethics;

9.104–3 [Amended]

4. Amend section 9.104–3 by removing paragraph (c); and by redesignating paragraphs (d) and (e) as (c) and (d), respectively.

PART 14—SEALED BIDDING

5. Amend section 14.404–2 by revising paragraph (i) to read as follows:

14.404–2 Rejection of individual bids.

(i) Low bids received from concerns determined to be not responsible pursuant to subpart 9.1 shall be rejected (but if a bidder is a small business

concern, see 19.6 with respect to certificates of competency).

* * * * *

PART 15—CONTRACTING BY NEGOTIATION

6. Amend section 15.503 by revising paragraph (a)(1) to read as follows:

15.503 Notification to unsuccessful offerors.

(a) *Preaward notices*—(1) *Preaward notices of exclusion from competitive range.* The contracting officer shall notify offerors promptly in writing when their proposals are excluded from the competitive range or otherwise eliminated from the competition. The notice shall state the basis for the determination and that a proposal revision will not be considered.

* * * * *

PART 31—CONTRACT COST PRINCIPLES AND PROCEDURES

31.205–21 [Amended]

7. Amend section 31.205–21 by removing the paragraph designation ''(a)''; and by removing paragraph (b) in its entirety.

8. Amend section 31.205–47 in paragraph (a) by adding, in alphabetical order, the definition ''Fraud'' (which was removed in the December 20, 2000, final rule (65 FR 80255) and stayed effective April 3, 2001); and by revising paragraph (b)(2) to read as follows:

31.205–47 Costs related to legal and other proceedings.

(a) * * *

Fraud, as used in this subsection, means—

(1) Acts of fraud or corruption or attempts to defraud the Government or to corrupt its agents;

(2) Acts which constitute a cause for debarment or suspension under 9.406–2(a) and 9.407–2(a); and

(3) Acts which violate the False Claims Act, 31 U.S.C., sections 3729–3731, or the Anti-Kickback Act, 41 U.S.C., sections 51 and 54.

* * * * *

(b) * * *

(2) In a civil or administrative proceeding, either a finding of contractor liability where the proceeding involves an allegation of fraud or similar misconduct or imposition of a monetary penalty where the proceeding does not involve an allegation of fraud or similar misconduct;

* * * * *

PART 52—SOLICITATION PROVISIONS AND CONTRACT CLAUSES

52.209–5 [Amended]

9. In section 52.209–5—

a. Revise the date of the provision to read ''(DEC 2001)'';

b. In paragraph (a)(1)(i)(B), remove ''the three-year'' and add ''a three-year'' in its place; and add ''and'' at the end of the paragraph;

c. In paragraph (a)(1)(i)(C), at the end of the paragraph, remove ''; and'' and add a period in its place; and

d. Remove paragraph (a)(1)(ii), and redesignate paragraph (a)(1)(iii) as (a)(1)(ii).

10. Amend section 52.212–3 by revising the date of the provision and paragraph (h) to read as follows:

52.212–3 Offeror Representations and Certifications—Commercial Items.

OFFEROR REPRESENTATIONS AND CERTIFICATIONS—COMMERCIAL ITEMS (*Dec 2001*)

(h) *Certification Regarding Debarment, Suspension or Ineligibility for Award (Executive Order 12549*). The offeror certifies, to the best of its knowledge and belief, that—

(1) The offeror and/or any of its principals [ ] are, [ ] are not presently debarred, suspended, proposed for debarment, or declared ineligible for the award of contracts by any Federal agency; and

(2) [ ] Have, [ ] have not, within a three-year period preceding this offer, been convicted of or had a civil judgment rendered against them for: commission of fraud or a criminal offense in connection with obtaining, attempting to obtain, or performing a Federal, state or local government contract or subcontract; violation of Federal or state antitrust statutes relating to the submission of offerors; or commission of embezzlement, theft, forgery, bribery, falsification or destruction of records, making false statements, tax evasion, or receiving stolen property; and [ ] are, [ ] are not presently indicted for, or otherwise criminally or civilly charged by a Government entity with, commission of any of these offenses.

(End of provision)

[FR Doc. 01–31302 Filed 12–26–01; 8:45 am]

BILLING CODE 6820–EP–P

DEPARTMENT OF DEFENSE

GENERAL SERVICES ADMINISTRATION

NATIONAL AERONAUTICS AND SPACE ADMINISTRATION

48 CFR Chapter 1

Federal Acquisition Regulation; Small Entity Compliance Guide

AGENCIES: Department of Defense (DoD), General Services Administration (GSA), and National Aeronautics and Space Administration (NASA).

ACTION: Small Entity Compliance Guide.

SUMMARY: This document is issued under the joint authority of the Secretary of Defense, the Administrator of General Services and the Administrator for the National Aeronautics and Space Administration. This *Small Entity Compliance Guide* has been prepared in accordance with section 212 of the Small Business Regulatory Enforcement Fairness Act of 1996 (Pub. L. 104–121). It consists of a summary of rules appearing in Federal Acquisition Circular (FAC) 2001–03 which amend the FAR. An asterisk (*) next to a rule indicates that a regulatory flexibility analysis has been prepared in accordance with 5 U.S.C. 604. Interested parties may obtain further information regarding these rules by referring to FAC 2001–03 which precedes this document. These documents are also available via the Internet at *http://www.arnet.gov/far*.

FOR FURTHER INFORMATION CONTACT: Laurie Duarte, FAR Secretariat, (202) 501–4225. For clarification of content, contact the analyst whose name appears in the table below.

LIST OF RULES IN FAC 2001–03

Item	Subject	FAR case	Analyst
I	Contractor Responsiblity, Labor Relations Costs, and Costs Relating to Legal and Other Proceedings.	1999–010 (stay)	De Stefano.
II	Contractor Responsibility, Labor Relations Costs, and Costs Relating to Legal and Other Proceedings—Revocation.	2001–014	De Stefano.

Item I—Contractor Responsibility, Labor Relations Costs, and Costs Relating to Legal and Other Proceedings (FAR Case 1999–010 (Stay))

The Federal Acquisition Regulatory Council (FAR Council) published in the **Federal Register** at 65 FR 80255, December 20, 2000, a final rule addressing contractor responsibility and costs incurred in legal and other proceedings. After further review, the FAR Council published an interim rule in the **Federal Register** at 66 FR 17754, April 3, 2001, staying that rule. This final rule terminates the stay.

Item II—Contractor Responsibility, Labor Relations Costs, and Costs Relating to Legal and Other Proceedings—Revocation (FAR Case 2001–014)

The Federal Acquisition Regulatory Council (FAR Council) published in the **Federal Register** at 66 FR 17758, April 3, 2001, a proposed rule (April proposed rule) with a request for public comments. The April proposed rule proposed revoking a final rule published in the **Federal Register** at 65 FR 80255, December 20, 2000 (December final rule). The December final rule addressed responsibility and costs incurred in legal and other proceedings. This rule finalizes the April 3, 2001, proposed rule.

Dated: December 14, 2001.

Gloria M. Sochon,

Acting Director, Acquisition Policy Division.

[FR Doc. 01–31303 Filed 12–26–01; 8:45 am]

BILLING CODE 6820–EP–P

Federal Register

Thursday,
December 27, 2001

Part III

Department of Transportation

Research and Special Programs Administration

49 CFR Part 195

Controlling Corrosion on Hazardous Liquid and Carbon Dioxide Pipelines; Final Rule

DEPARTMENT OF TRANSPORTATION

Research and Special Programs Administration

49 CFR Part 195

[Docket No. RSPA–97–2762; Amdt. 195–73]

RIN 2137–AD24

Controlling Corrosion on Hazardous Liquid and Carbon Dioxide Pipelines

AGENCY: Research and Special Programs Administration (RSPA), DOT.

ACTION: Final rule.

SUMMARY: This Final Rule makes changes in some of the corrosion control standards for hazardous liquid and carbon dioxide pipelines. The changes are based on our review of the adequacy of the present standards compared to similar standards for gas pipelines and acceptable safety practices. The changes are intended to improve the clarity and effectiveness of the present standards, and reduce the potential for pipeline accidents due to corrosion.

DATES: This Final Rule takes effect January 28, 2002. The incorporation by reference of the publication listed in the rule is approved by the Director of the Federal Register January 28, 2002.

Compliance dates: Under § 195.563(c), operators of certain effectively coated buried piping in breakout tank areas or pump stations are not required to cathodically protect that piping until December 29, 2003. Under § 195.567(a), operators of cathodically protected pipelines or pipeline segments that lack test leads for external corrosion control are not required to install test leads until December 29, 2004. Under § 195.573(a)(2), operators are not required to determine the circumstances in which a close-interval survey or comparable technology is practicable and necessary until December 29, 2003. Under § 195.573(b), operators of unprotected pipe are not required to reevaluate the need for corrosion control on the pipe at least every 3 years until December 29, 2003.

FOR FURTHER INFORMATION CONTACT: L. M. Furrow by phone at 202–366–4559, by fax at 202–366–4566, by mail at U.S. Department of Transportation, 400 Seventh Street, SW., Washington, DC 20590, or by E-mail at *buck.furrow@rspa.dot.gov.*

SUPPLEMENTARY INFORMATION:

Background

Corrosion causes a significant proportion of hazardous liquid pipelines accidents. Based on this finding, we reviewed the corrosion control standards in 49 CFR part 195 to determine if the standards need to be made clearer, more effective, or consistent with acceptable safety practices. We believe that improving the standards will have the potential to reduce the number of accidents caused by corrosion.

The review began September 8, 1997, when we held a public meeting in Oak Brook, Illinois to discuss how part 195 corrosion control standards and the corrosion control standards for gas pipelines in 49 CFR part 192 might be improved (62 FR 44436; Aug. 21, 1997). We held the public meeting in conjunction with meetings of National Association of Corrosion Engineers International (NACE), a professional technical society dedicated to corrosion control. Participants agreed, universally, that part 192 and part 195 corrosion control standards are largely sufficient, and although some changes may be needed, the standards should remain generally unchanged.

Based on this conclusion, we began to consider whether the more comprehensive part 192 gas standards, possibly with some changes, would be appropriate for part 195's hazardous liquid and carbon dioxide pipelines. We met then, from time to time, with representatives of NACE, the pipeline industry, and state pipeline safety agencies for technical input. At these meetings, we also examined whether the part 192 standards need to be more effective or clearer. The meetings raised various concerns about the effectiveness and clarity of some of the part 192 corrosion control standards and the suitability of applying those standards to hazardous liquid and carbon dioxide pipelines. We also took into account that the National Association of Pipeline Safety Representatives, the Gas Piping Technology Committee, and the National Transportation Safety Board had at various times recommended changes to part 192 and part 195 corrosion control standards. So, to gather public comment on our concerns and the changes these organizations recommended, we held another public meeting on April 28, 1999, in San Antonio, Texas, and invited the public to submit written comments. The comment period remained open until June 30, 1999 (64 FR 16885; April 7, 1999).

Notice of Proposed Rulemaking

Sixty-two persons filed written comments in response to the San Antonio meeting notice. We then summarized these comments in a notice of proposed rulemaking (NPRM) published last year (65 FR 76968; Dec. 8, 2000). The NPRM proposed to add to part 195 a new subpart H called Corrosion Control. Subpart H would prescribe corrosion control standards for all new and existing steel pipelines to which part 195 applies. At this time, we also decided to address the concerns, recommendations, and comments that pertain primarily to the corrosion control standards in part 192 in a separate notice of proposed rulemaking on gas pipelines.

Although there was little support in the record for allowing NACE Standard RP0169–96, ''Control of External Corrosion on Underground or Submerged Metallic Piping Systems,'' to serve as an alternative to standards proposed in subpart H, we specifically requested further comment on this issue due to NACE's standing in the field of corrosion. Unfortunately, no one commenting on the NPRM responded to that request, perhaps because of earlier discussions of the issue in Oak Brook and San Antonio. While NACE urged us to reference the entire NACE Standard, not just section 6 as we proposed, NACE did not assert that the NACE Standard could serve as an acceptable alternative to proposed subpart H.

The NPRM discussed each of the standards proposed for inclusion in subpart H. Many of these standards are identical to present corrosion control requirements in part 195, and many of the standards are substantially like the present requirements in part 192. Proposed subpart H also includes standards that, while based on present part 192 requirements, include changes which we think are beneficial improvements.

Discussion of Comments

We received comments from the following entities in response to the NPRM: Alberta Energy Company (AEC), City of Dallas Water Utilities, Enron Transportation Services Company (Enron), Environmental Defense, Equilon Pipeline Company (Equilon), L.A. ''Roy'' Bash, NACE, Phillips Pipe Line Company (Phillips), State of Iowa Utilities Board (Iowa), State of Washington Utilities and Transportation Commission (WUTC), and Tosco Corporation (Tosco). Most commenters supported the rulemaking, and all but the City of Dallas recommended changes to some of the proposed standards.

The City of Dallas related its experience with a major pipeline spill caused partly by corrosion. Gasoline containing MTBE, a fuel oxygenate which effects the taste and odor of water, entered a lake resulting in a water supply crisis. The City stated that it is critical for DOT to adopt rules to require

all pipelines, especially those transporting gasoline with MTBE near a municipal water resource, to be regularly monitored for corrosion, cracks, and leaks; and that any deficiencies found, be timely repaired.

This rulemaking will accomplish what the City of Dallas is seeking with respect to corrosion. In particular, §§ 195.573, 195.579, and 195.583 will require operators to monitor pipelines regularly for corrosion and correct any deficiencies found in corrosion control. Additionally, new § 195.585 specifies corrective action for any harmful corrosion found. The timeliness of correcting corrosion control deficiencies and harmful corrosion is covered by existing §§ 195.401(b) and 195.452(h).

The requirement for operators to patrol their pipelines regularly for signs of failures is longstanding (§ 195.412(a)). However, we recently broadened requirements by publishing standards on integrity management which will require pipelines in or near high-consequence areas, such as drinking water sources, to be internally inspected or pressure tested at regular intervals for corrosion, cracks, and other defects (65 FR 75377; Dec. 1, 2000). These new standards currently apply to operators with 500 or more miles of hazardous liquid pipelines, and we have proposed similar standards for the remaining hazardous liquid operators subject to part 195 (66 FR 15821; Mar. 21, 2001).

The following material, which is organized by sections of final subpart H, summarizes comments on the NPRM. In addition, the material explains how we treated the comments and other considerations in developing final subpart H. If a subsection is not mentioned, no significant comments were received on the corresponding proposed rule and we are adopting the proposed rule as final.

Section 195.551. This informational section provides the content of subpart H. Subpart H contains minimum requirements for protecting steel pipelines against corrosion.

In commenting on proposed § 195.551, Tosco suggested we replace the term ''steel'' with ''metallic'' so subpart H would apply to pipelines made of any metal. Indeed, our corrosion control standards for gas pipelines apply to any metallic pipeline (49 CFR 192.451(a)). However, in contrast to gas pipelines, hazardous liquid and carbon dioxide pipelines are almost exclusively made of steel. For this reason, many of the existing standards in part 195, including corrosion control standards, apply only to steel pipelines. Our review of the corrosion control standards did not disclose a need to expand their coverage to include pipelines made of metals other than steel. In commenting on the NPRM, no one, including Tosco, presented information to explain why the coverage should be expanded. Nevertheless, operators are required to provide us an opportunity to review the safety of any pipeline that is to be constructed with a material other than steel (§ 195.8). In the case of a metallic pipeline made from a material other than steel, such as aluminum, our review would include the operator's plan for corrosion control.

Section 195.553. This new section was not in the NPRM. It provides definitions of terms used in subpart H. The definitions of ''active corrosion,'' ''electrical survey,'' and ''pipeline environment,'' proposed in § 195.569(c), drew no adverse comment. Additionally, final § 195.553 establishes definitions of ''buried'' and ''you.'' The definition of ''buried'' reflects the common corrosion control practice of treating any portion of pipe in contact with the soil as if that portion were buried. The term ''you'' has the same meaning as ''operator.''

Section 195.555. This section, based on proposed § 195.553, keeps in effect the existing qualification standards in § 195.403(c) for corrosion control supervisors. Under § 195.403(c), each operator must require and verify that its supervisors maintain a thorough knowledge of that portion of the corrosion control procedures established under § 195.402 for which they are responsible, to insure compliance.

While Tosco and WUTC supported the proposed rule, Phillips objected to it. Phillips believed that part 195 should include qualifications for supervisors of all operation and maintenance activities, not just corrosion control. In the negotiated rulemaking on qualification of pipeline personnel (64 FR 46866; Aug. 27, 1999), we removed the requirements in § 195.403(c) concerning qualifications of supervisors of operations and maintenance activities, effective October 28, 2002. We did so based on the requirement under subpart G of part 195, that on this date, individuals performing regulated operation and maintenance activities must be fully qualified, thus lessening the need to regulate the qualifications of their supervisors. After revising § 195.403(c), our more specific review of the corrosion control standards called attention to the special role that supervisors play in carrying out corrosion control activities. As we explained in the NPRM, individuals qualified to do such activities as taking electrical readings, usually hand the data collected over to supervisors who make critical decisions about corrosion control adequacy and the need for corrective action. None of the commenters, including Phillips, argued that corrosion control supervisors do not need to have the qualifications required by existing § 195.403(c). So given the special role of corrosion control supervisors and the apparent acceptability of the existing supervisor qualification requirements, we continue to believe those requirements should remain in effect after October 28, 2002. This decision does not affect the expiration on October 28, 2002, of qualification requirements for supervisors of other operation and maintenance activities.

Equilon and NACE believed qualifications for supervisors should be no less rigorous than stated in paragraph 1.3 of NACE Standard RP0169–96. These NACE provisions address the need for corrosion control supervisors to have a minimum level of technical competency.[1] In our corrosion control review, we considered this NACE provision as well as 49 CFR 192.453, which provides that gas pipeline corrosion control procedures must be carried out by or under the direction of a person qualified in corrosion control methods. Also, in the San Antonio meeting notice, we asked if more specific standards are needed for individuals who direct corrosion control procedures. Everybody who responded opposed changing § 192.453, and most responders also opposed establishing specific technical qualifications like those in NACE Standard RP0169–96. We expect that individuals who qualify as a supervisor under proposed § 195.553, will have appropriate technical training or experience in corrosion control. Given that neither our review, nor comments on the NPRM disclosed anything in the pipeline industry's safety record to demonstrate the need for more specific technical qualifications, we did not adopt the Equilon and NACE comment.

Sections 195.557, 195.559, and 195.561. These three standards on

[1] Paragraph 1.3 reads:

The provisions of this standard shall be applied under the direction of competent persons who, by reason of knowledge of the physical sciences and the principles of engineering and mathematics, required by education and related practical experience, are qualified to engage in the practice of corrosion control on buried or submerged metallic piping systems. Such persons may be registered professional engineers or persons recognized as corrosion specialists or cathodic protection specialists by NACE if their professional activities include suitable experience in external corrosion control of buried or submerged metallic piping systems.

external coating are based on proposed § 195.555 and 195.557. Collectively, the standards require buried or submerged pipelines to have external coating with particular attributes, and require operators to inspect pipe coating and repair any damage. As stated in proposed § 195.555, the standards are limited to pipelines constructed, relocated, replaced, or otherwise changed after certain effective dates in § 195.401(c); and limited to certain converted pipelines. In final § 195.557, we have clarified that aboveground breakout tank bottoms need not be coated. We determined that such a requirement is impractical and not a customary corrosion control practice.

In the NPRM, we proposed in § 195.555 to limit the applicability of proposed §§ 195.557 (external coating), 195.559 (cathodic protection), and 195.561 (test leads) to pipelines constructed, replaced, relocated, or otherwise changed after the applicable effective date. We based proposed § 195.555, for the most part, on existing § 195.200, titled Scope, which similarly limits the applicability of corresponding existing §§ 195.238, 195.242, and 195.244. However, we inadvertently omitted from § 195.555 the pipe movement exception included in § 195.200. In this Final Rule, the substance of proposed § 195.555 regarding external coating and cathodic protection is in § 195.557(a), which does include the omitted exception for pipe movement. We addressed the proposed limit on test leads differently, as discussed below under the heading, section 195.567.

Tosco believes it would be helpful to include in subpart H the past effective dates cross-referenced in proposed § 195.555. Tosco believes the dates are not widely known. We did not adopt this comment because the dates are already stated in § 195.401(c) for purposes of indicating the applicability of standards in addition to corrosion control standards, and we do not want to create an unnecessary redundancy in part 195.

Final § 195.557 specifies which pipelines must have external coating. Rather than cross-referencing § 195.5(b) to indicate which converted pipelines must have coating, we transferred to final § 195.557 the coating aspect of § 195.5(b). We transferred the cathodic protection aspect to final § 195.563(b); and the test lead aspect is covered by § 195.567.

Equilon and NACE suggested we establish an additional standard to minimize damage to coating when operators install pipe by boring, driving, directional drilling, or any similar method. Final § 195.559(d) requires external coating to have enough strength to resist damage due to handling and soil stress. We believe this standard is broad enough to cover the potential pipe installation problems raised by these commenters.

Phillips advised against requiring the installation of coating on older existing bare or ineffectively coated pipelines. We believe Phillips may be referencing existing hazardous liquid pipelines constructed before the applicable effective dates stated in § 195.401(c). These pipelines are not subsequently replaced, relocated, or otherwise changed. Final § 195.557 does not require these older pipelines to be coated.

Tosco suggested that § 195.557 should include the dates for which pipelines must have external coating. The final rule accomplishes this objective by cross-referencing § 195.401(c). Restating the dates listed in § 195.401(c) would be unnecessarily redundant since the dates are in § 195.401(c) for purposes other than corrosion control.

Section 195.563. Final § 195.563 combines cathodic protection requirements proposed in §§ 195.555, 195.559, and 195.563. It also cross-references final § 195.573(b), which requires cathodic protection of unprotected pipe found to have active corrosion. As a result, all pipelines that must have cathodic protection under subpart H are identified in a single section.

Final § 195.563(a), which is based on proposed §§ 195.559(a) and (b), requires cathodic protection on each pipeline that must have an external coating under § 195.557(a). The cross-reference to § 195.557(a) limits the cathodic protection requirement to those pipelines constructed, relocated, replaced, or otherwise changed after certain dates, as proposed under § 195.555. Section 195.563(a) does not contain the second sentence of proposed § 195.559(a) which would require operators to have a test procedure to determine whether adequate cathodic protection was achieved. We now believe this sentence is redundant due to the routine monitoring conducted to determine the adequacy of cathodic protection, required by final § 195.573(a). Also, amended § 195.402(c)(3) requires operators to have procedures to carry out § 195.573(a). Although proposed § 195.559(b) only referred to completion of construction as the beginning of the period during which cathodic protection must be installed, final § 195.563(a) reflects the broader applicability indicated by proposed § 195.555.

We proposed in § 195.559(a), which was based on existing § 195.242(a), a requirement that operators install cathodic protection systems on all buried or submerged pipelines ''to mitigate corrosion that might result in structural failure.'' Equilon and NACE suggested this proposed rule would be clearer if we replaced ''structural failure'' with ''structural failure or penetration of pipe or tank wall.'' In light of their comment, we believe the phrase, ''to mitigate corrosion that might result in structural failure,'' creates confusion. It could be interpreted to require protection only against severe external corrosion. Moreover, since it is clear that existing § 195.242(a) requires cathodic protection against all external corrosion, the phrase seems superfluous. Therefore, we did not use it in final § 195.563(a).

Equilon and NACE also commented on the § 195.559(b) proposed requirement that a cathodic protection system be installed not later than 1 year after completing construction. They believe cathodic protection should be in effective operation at the end of 1 year, to guard against significant corrosion that could be caused by stray currents or galvanic long-line currents. We believe effective operation is implicit in the existing and proposed standards on installation of cathodic protection. Nevertheless, to avoid confusion on this point, in final § 195.563(a) we replaced ''installed'' with ''in operation.'' This change is consistent with the comparable standard for gas pipelines in § 192.455(a)(2). Under final § 195.571, when the cathodic protection system is placed in operation, it would have to comply with one or more of the applicable criteria and other considerations for cathodic protection contained in paragraphs 6.2 and 6.3 of NACE Standard RP0169–96. Subsequent electrical tests and other steps required by final § 195.573(a) will assure that adequate protection is maintained.

WUTC raised the concern that under proposed § 195.559(b) corrosion could go uncontrolled on some facilities for up to 2 years. Based on a Washington State administrative rule, WUTC recommended that § 195.559(b) require that facilities be cathodically protected within 90 days after they are buried or submerged. We did not propose to change the currently required time limit (1 year after completing construction) because our review of the corrosion control standards and the comments from the San Antonio meeting did not indicate any need to reduce the installation time limit. After considering

WUTC's comment, we still believe 1 year after construction is acceptable as a generally applicable time limit considering that soil conditions may need time to stabilize in order to support cathodic protection.

Final § 195.563(b) requires cathodic protection on certain converted pipelines. This requirement does not differ substantively from the cathodic protection aspect of the corrosion control requirement of § 195.5(b). Therefore, we are modifying § 195.5(b) to cross-reference the new subpart H standards.

Under final § 195.563(c), which is based on proposed § 195.563, all buried or submerged pipelines, that have an effective external coating must have cathodic protection. This requirement does not apply to breakout tanks. This requirement is substantially the same as existing § 195.414(a), which requires that all effectively coated pipelines must be cathodically protected, except for breakout tank areas and buried pumping station piping.

However, Equilon and NACE each stated it saw no need to except buried piping in breakout tank areas and pumping stations from the requirement to cathodically protect effectively coated pipelines. We agree that the exception seems to lack a sound safety basis. For example, NACE Standard RP0169–96 does not have a similar exception from cathodic protection. Also, we believe it is now common practice in the hazardous liquid pipeline industry to cathodically protect effectively coated buried piping in breakout tank areas and pump stations. So, in view of the Equilon and NACE comments, and our further consideration, we decided to terminate the exception for buried piping in breakout tank areas and pumping stations. Therefore, the final rule keeps the exception in effect only until December 29, 2003. This period will give operators time to install cathodic protection on any effectively coated piping in breakout tank areas and pumping stations where it is not already installed. Also, since no one commented on application of the proposed rule to the bottoms of breakout tanks and there may not be many older breakout tanks that have effectively coated bottoms, the final rule does not change the present exception for breakout tank bottoms.

Initially, we did not propose regulations similar to §§ 195.414(b) and (c), which require cathodic protection in areas of active corrosion found through electrical inspections previously required on bare pipelines, breakout tank areas, and buried pumping station piping. We reasoned that §§ 195.414(b) and (c) are no longer necessary because the inspection deadlines had expired. However, we now recognize that the cathodic protection provisions of §§ 195.414(b) and (c) are continuing requirements, and so we included them in subpart H as final § 195.563(d).

Section 195.565. This section, concerning the installation of cathodic protection on breakout tanks, is the same as proposed § 195.559(c). There were no comments on proposed § 195.559(c).

Section 195.567. In this section concerning test leads, paragraphs (a) and (b) are based on proposed § 195.561 and existing § 195.244. The existing test lead standards in § 195.244 apply to onshore pipelines constructed, replaced, relocated, or otherwise changed after certain past dates; and to onshore converted pipelines if required by § 195.5(b). The NPRM did not propose to vary this application. However, upon further consideration of the importance of test leads in determining the adequacy of cathodic protection, we are applying final § 195.567 to all onshore pipelines that must have cathodic protection under subpart H. This increased coverage will affect pipelines or segments of pipelines that must have cathodic protection under existing §§ 195.414 and 195.416(d) (i.e., effectively coated pipelines and places on bare pipelines, breakout tank areas, and pumping station piping where active corrosion is found through electrical inspection). The increased coverage will also affect converted pipelines that were not substantially in compliance with existing § 195.244 when placed in service, as § 195.5(b) now permits. To ease the burden of compliance on existing cathodically protected pipelines or pipeline segments on which test leads are not now required by existing § 195.244 or § 195.5(b), final § 195.567(a) allows operators 3 years to identify these pipelines or pipeline segments and install test leads as necessary to meet § 195.567(b). On existing unprotected pipelines, any newly identified segment that must have cathodic protection as a result of an electrical survey under final § 195.573(b), must have test leads in time to carry out the annual monitoring test under final § 195.573(a).

Final § 195.567 is consistent with acceptable practices. The practices recommended for test leads in NACE Standard RP0169–96 and in ASME B31.4 are not limited to new, relocated or replaced pipelines. Also, our gas pipeline regulations in 49 CFR 192.469 and 192.471 for test stations and test leads, apply to all gas pipelines that must be cathodically protected under 49 CFR part 192. Moreover, existing § 195.416(a) requires annual testing of each cathodically protected pipeline to determine the adequacy of cathodic protection; and operators normally comply with this requirement by obtaining electrical measurements through test leads. So we believe § 195.567 will have only a minimal impact on hazardous liquid pipeline companies.

Based on existing § 195.244(b)(1), we proposed in § 195.561(b)(1) that operators install test leads with enough looping or slack to prevent the leads from being unduly stressed or broken during backfilling. Equilon and NACE suggested that to assure test lead wires remain effective, we should add the phrase ''to remain mechanically secure and electrically conductive.'' We believe the objective of this phrase is within the purpose of the existing rule, and therefore, added the phrase to final § 195.567(b)(2) for emphasis.

The long term integrity of test leads is also covered by final § 195.567(c). Based on proposed § 195.573, this standard requires maintenance of test leads. There were no comments on the proposed rule, however we edited the final rule for clarity.

Equilon and NACE also commented on testing cathodic protection of offshore pipelines. They contended that test lead readings at platforms or at shore locations may be of little benefit in determining the adequacy of cathodic protection of offshore pipelines. As an alternative to such readings, they suggested we require operators to analyze or inspect each cathodic protection system before the end of its design life. In our experience, test leads for offshore pipelines normally are installed only on platforms or on shore because of the difficulty of accessing leads at underwater locations. For this reason, § 195.567 does not apply to buried or submerged portions of offshore pipelines. Since pipeline corrosion in an offshore environment generally occurs at a uniform rate, we believe readings taken by operators at offshore platforms or on shore are used satisfactorily to determine the adequacy of protection over the entire pipeline. Moreover, this test method is acceptable for offshore gas pipelines under paragraph A862.15 of the ASME B31.8 Code. Because there is no information to support the need to require the use of an alternative testing method, we chose not to take action on the commenters' suggestion.

WUTC commented that because the proposed standard does not prescribe the number or precise location of test leads, government inspectors may disagree with operators over whether

test readings are sufficient to determine the adequacy of cathodic protection. To ameliorate this situation, WUTC suggested that we require operators to conduct close-interval electrical surveys every 5 years. Although final § 195.567 does not specify the number or precise location of test leads, it does provide a performance standard for the location of test leads. Under § 195.567(b)(1) test leads must be installed at sufficiently frequent intervals to obtain electrical measurements indicating the adequacy of cathodic protection. Section 4.5 of NACE Standard RP0169–96, which lists many customary test lead locations, may be used as a guide to comply with § 195.567(b)(1). Additionally, the final rule on monitoring external corrosion control, § 195.573, will require operators to use close-interval surveys in some situations and install additional test leads where warranted.

Section 195.569. This section, which is based on proposed § 195.565, provides that whenever an operator learns that any portion of a buried pipeline is exposed, the exposed portion must be examined for external corrosion if the pipe is bare or has deteriorated coating. Further, if external corrosion requiring remedial action is found, the operator must investigate pipe in the vicinity of the exposed portion (by visual examination, indirect method, or both) to determine if there is any additional external corrosion requiring remedial action.

Phillips requested more flexibility in the proposed requirement to look for additional corrosion. Phillips commented that the extent of further investigation should depend on the type of corrosion found and whether the corrosion could be expected to extend beyond the exposed segment. We do not believe there is a clear understanding of the relationship between the type of corrosion and the likelihood of finding similar corrosion in the vicinity of the exposed pipe to justify limits on the requirement for additional investigation. Pipe and soil conditions are generally too variable to make such predictions with accuracy. Therefore, we did not adopt Phillips' comment.

WUTC believed subpart H should include additional requirements for operators to do more to determine the condition of coating than just visually examine it whenever pipelines are exposed. WUTC stated that the standards should require operators to conduct surveys to identify areas with coating defects and take remedial measures such as re-coating the pipeline. Although the final rules do not specifically require pipe coating surveys, operators must conduct electrical tests periodically to determine the adequacy of corrosion control on their buried pipelines. Low cathodic protection potential readings obtained during these tests often are a sign of coating defects. So, in areas with low potential readings, many operators supplement cathodic protection tests with coating surveys to help them identify places where the pipeline must be excavated to look for corrosion cells or to determine where additional cathodic protection must be applied. The need to mandate the use of coating surveys in addition to electrical tests for corrosion, was not evident from our review of the regulations.

Section 195.571. This standard, proposed as § 195.567, incorporates by reference the criteria and other considerations in section 6 of NACE Standard RP0169–96, as standards for the adequacy of cathodic protection.

Environmental Defense and Iowa argued that because cathodic protection criteria are fundamental to safety, the criteria should be stated in part 195 rather than incorporated by reference. Iowa believed that acquiring and maintaining a separate document is arbitrary and unnecessarily burdensome. In considering these comments, we reviewed OMB Circular A119 and the National Technology Transfer and Advancement Act of 1995. Both documents direct Federal agencies to use consensus standards where practical to meet their policy objectives rather than develop government-unique standards. We also reviewed the rules of the **Federal Register** on incorporation by reference. In light of these Federal policies, we think it is appropriate for us to incorporate the NACE criteria and other considerations by reference, as proposed.

Enron, Environmental Defense, and L. A. (Roy) Bash urged us to adopt the criteria in Appendix D of part 192 instead of the NACE criteria. Enron commented that many operators are successfully using Appendix D for hazardous liquid pipelines; and Environmental Defense viewed Appendix D as more specific and therefore more enforceable. Roy Bash submitted technical documentation in support of two Appendix D criteria, 300 mV shift and E-log-I. In the NPRM we discussed our reluctance to propose Appendix D as the new standard for hazardous liquid pipelines because the Appendix D 300 mV shift and E-log-I criteria are not incorporated in the NACE Standard. Furthermore, we explained that under paragraph 6.2.1 of the NACE Standard, operators may use any criteria which they can demonstrate achieves corrosion control comparable to section 6 criteria. Also, operators may continue to use criteria which they have successfully applied to existing pipelines, on these pipelines. While this provision may satisfy Enron, and should satisfy Roy Bash's concern about the continued use of the 300 mV shift and E-log-I criteria, the lack of specificity in paragraph 6.2.1 may be indicative of Environmental Defense's concern. Yet, we do not believe the performance wording of paragraph 6.2.1 alone is sufficient reason not to reference section 6 of the NACE Standard. On the contrary, we generally favor performance standards over specification standards because they encourage operators to develop and apply better alternatives. If however, an operator chooses to use alternative criteria, we will carefully examine the operator's rationale for determination that the criteria met the ''comparable to'' or ''successfully applied'' tests of paragraph 6.2.1 of the NACE Standard.

WUTC was concerned that the criteria in section 6 of the NACE Standard would not be mandatory because paragraph 6.1.1 refers to paragraph 1.2, which states that the Standard is a guide; and also refers to paragraph 1.4, which allows deviations from the Standard. Proposed § 195.567 refers solely to the criteria and other consideration provisions of section 6, which are contained in paragraphs 6.2 and 6.3 of the NACE Standard. We did not intend to allow operators to treat section 6 as a guide or to deviate from the criteria and other considerations in section 6. Therefore, the final rule refers to paragraphs 6.2 and 6.3, instead of section 6.

WUTC was also concerned about special conditions, such as elevated temperatures, disbonded coatings, thermal insulating coatings, shielding, bacterial attack, and unusual contaminants in the electrolyte, which may cause cathodic protection to be ineffective. WUTC believed the rules on coating and cathodic protection should address these special conditions. The theory behind final § 195.571 is that if all external surfaces of a pipeline are cathodically protected according to the criteria and other considerations in paragraphs 6.2 and 6.3 of the NACE Standard, external corrosion will be controlled successfully. In practice, if an operator learns though in-line inspection or other means that because of a special condition external corrosion is not being controlled successfully, the operator must take corrective action. The operator could either remedy the condition or adjust the cathodic protection system to assure the adequacy of cathodic protection in the

area of the special condition. We believe this requirement is implicit in final § 195.571. Section 195.573(e) also would require corrective action if the condition is detected by monitoring under § 195.573.

In addition, WUTC was concerned that the proposed rules did not specify how long the cathodic protection current may be shut off when measuring polarization decay under the minimum 100 mV criterion. WUTC suggested that the limit be no more than 48 hours, unless a recording chart shows continuing significant decay beyond that time. To satisfy the100 mV criterion by the decay method, operators must determine that a negative polarization voltage shift of at least 100 mV occurs after the immediate voltage shift caused by shutting off the cathodic protection current. Whether this minimum negative voltage shift occurs in minutes or hours after the current is cut off, it is irrelevant to satisfying the criterion. We recognize that the longer the current remains off, the greater the opportunity for the pipeline to corrode. However, in our experience decay tests have not posed a serious problem in this regard to warrant establishing a time limit.

Finally, WUTC opposed use of the net protective current criterion on bare or ineffectively coated hazardous liquid pipelines. WUTC was concerned about the criterion being applied only at predetermined current discharge points identified through leaks, leak history, or electrical surveys, preventing the pipeline from having complete cathodic protection against corrosion leaks. WUTC suggested that if we allow use of the criterion, we limit its use to pipelines constructed before part 195 went into effect. According to part 195's terms, the net protective current criterion applies only to bare or ineffectively coated pipelines. Because all pipelines subject to part 195 construction standards must be effectively coated, the net protective current criterion will mostly be used on older pipelines constructed before those standards took effect. The effective dates for different groups of pipelines are stated in § 195.401(c).

WUTC's primary concern seems to be that we did not propose a requirement that operators fully cathodically protect bare or ineffectively coated pipelines. We did not propose such action for several practical reasons. To cathodically protect these pipelines over their entire surface area without first coating or recoating them would require very high levels of impressed currents. Cathodic protection systems producing such high current levels would be costly to install, maintain, and operate. Also, to coat all bare or ineffectively coated buried pipelines in order to facilitate cathodic protection could be a costly endeavor. We also considered the possibility that raising pipe sections to coat them would likely create unanticipated stresses and disturb pipe foundations, introducing new risk factors not present in the existing pipelines.

Section 195.573. This section is based on proposed § 195.569. It requires operators to monitor the performance of cathodic protection facilities and monitor unprotected pipe for active corrosion.

Final § 195.573(a) enhances proposed § 195.569 with regard to determinations of the adequacy of cathodic protection. We edited § 195.573(a) to clearly state that operators must conduct tests to determine whether cathodic protection complies with § 195.571 and not whether cathodic protection is adequate, as proposed. In addition, we are concerned that proposed § 195.569 does not provide latitude in monitoring separately protected short segments of bare or ineffectively coated pipelines, as does the corresponding rule for monitoring protected gas pipelines (49 CFR 192.465(a)). The gas rule allows monitoring of short protected segments over a 10-year period where annual monitoring is impractical. We considered adding a similar provision to § 195.573(a) but decided that the 10-year period would add more latitude than circumstances warrant on bare or ineffectively coated hazardous liquid pipelines. Many operators now monitor short protected segments of bare or ineffectively coated lines on the same cycle as adjoining unprotected segments. So, rather than use the gas rule provision, we added a provision that allows monitoring at 3-year intervals which is consistent with the monitoring cycle we are adopting for unprotected sections (see discussion of § 195.573(b) below).

We also addressed the problem of how to test pipelines to determine the adequacy of cathodic protection. In complying with existing § 195.416(a), which was the basis of proposed § 195.569, operators generally conducted electrical surveys. This action involves measuring potentials at pre-established test stations, to determine the adequacy of cathodic protection. In practice, however, this method of compliance has not always been sufficient to assure protection of all pipeline surfaces. Corrosion problems often arise in areas between test stations where there may be interference currents, different environmental conditions, damaged coatings, or malfunctioning anodes. So, in order to check on cathodic protection adequacy in greater detail, many operators augment test station data with periodic close-interval electrical surveys or use newer technologies. As WUTC pointed out in its comments, these more detailed surveys also help operators determine if additional test stations are needed to assure the adequacy of cathodic protection.

Paragraph 10.1.1.3 of NACE Standard RP0169–96 recommends that operators use close-interval surveys where they are practicable and sound engineering judgment indicates they are necessary.[2] For this reason and because we believe the general method of monitoring cathodic protection at established test stations may not always be sufficient, we have referenced the NACE provision in final § 195.573(a)(2). Although the final rule does not prescribe a frequency of close-interval surveys, operators will have to describe in their maintenance procedures the circumstances in which a close-interval survey or comparable technology is practicable and necessary to accomplish the objectives of paragraph 10.1.1.3 of the NACE Standard, and then follow those procedures.

In order to provide operators with time to prepare for compliance with the new close-interval survey requirement, the compliance date for existing pipelines will not be mandatory until December 29, 2003.

Final § 195.573(b), which is based on proposed § 195.569(c), requires that operators must reevaluate their unprotected pipe and cathodically protect the pipe where active corrosion is found. Operators must determine if active corrosion exists by electrical survey where practical, or otherwise by a review and analysis of certain maintenance records and the pipeline environment. Proposed definitions of the terms ''active corrosion,'' ''electrical survey,'' and ''pipeline environment'' are combined with other definitions in final § 195.553. Also, final § 195.573(b) applies to ''pipe'' rather than ''pipelines'' as proposed, because we did not intend for the proposed rule to apply to unprotected breakout tank bottoms. Integrity inspection of the bottoms of breakout tanks is covered by existing § 195.432.

[2] Paragraph 10.1.1.3 reads: Where practicable and determined necessary by sound engineering practice, a detailed (close-interval) potential survey should be conducted to (a) assess the effectiveness of the cathodic protection system; (b) provide base line operating data; (c) locate areas of inadequate protection levels; (d) identify locations likely to be adversely affected by construction, stray currents, or other unusual environmental conditions; or (e) select areas to be monitored periodically.

Equilon, Environmental Defense, and NACE argued that because unprotected pipelines may deteriorate as they age, operators should reevaluate these pipelines at intervals of less than 5 years, the maximum interval proposed in the NPRM. They suggested that to be consistent with part 192 we set the maximum interval at 3 years, not to exceed 39 months. Like these commenters, Iowa also saw a need to add 3 months to the maximum interval, whether it be 5 or 3 years, to provide scheduling and operational flexibility.

In view of the three comments favoring a 3-year inspection interval and the Technical Hazardous Liquid Pipeline Safety Standards Committee's unanimous recommendation to establish a maximum 3-year interval (see the Advisory Committee Consideration heading below), we reconsidered whether the appropriate maximum inspection interval should be 3 or 5 years. We considered the fact that the relation between relevant risk factors on unprotected pipelines and an appropriate inspection interval is uncertain. As discussed in the NPRM, we are also seeking to make the corrosion control standards for gas and hazardous liquid pipelines consistent wherever reasonable. At present part 192 prescribes a maximum inspection interval of 3 years for unprotected gas pipelines; and part 195 prescribes 5 years. Although there is no evidence in the record to demonstrate conclusively the advantage of a 3-year interval over a 5-year interval, taking into consideration the risk to the public and environment, we believe the more conservative 3-year interval is the prudent choice. Furthermore, we believe this choice is reasonable based on our enforcement experience, as well as, discussions with industry representatives which indicate that many hazardous liquid pipeline operators inspect their unprotected pipelines every 3 years. Therefore, the final rule is changed from the proposed maximum 5-year interval to a maximum 3-year interval.

In order to provide operators with time to prepare for compliance with the new 3-year inspection interval, compliance will not be mandatory until December 29, 2003.

Equilon and NACE suggested that in-line inspection may be a more appropriate alternative to electrical survey than analysis of leak repairs and other matters as proposed in § 195.569(c). However, the proposed rule did not limit an operator's choice of alternatives to an analysis of leak repairs. Rather, where electrical surveys are impractical, we proposed the use of any alternative means of determining whether active corrosion exists, as long as that means includes a review and analysis of leak repair and inspection records, corrosion monitoring records, exposed pipe inspection records, and the pipeline environment. Under the final rule, if operators have in-line inspection data and want to use it as an alternative to electrical surveys where such surveys are impractical, they may do so provided they interpret the data in light of the required review and analysis of other pertinent information.

WUTC suggested we put the following sentence in the final rule: ''Each operator shall take prompt remedial action to correct any deficiencies indicated by the monitoring.'' We discussed in the NPRM why we did not propose such a requirement. We stated that it is unnecessary to direct such action due to the existing requirements under § 195.401(b). This section requires operators to correct within a reasonable time any condition that could adversely affect safe operation of a pipeline system; and if an immediate hazard exists, to cease operating the affected part of the system until the condition is corrected. In addition, on pipelines that could affect high consequence areas, new § 195.452(h) requires operators to take prompt actions to address integrity issues and to repair certain conditions within specific time limits. However, in light of WUTC's comment, we established § 195.573(e) to draw attention to the remedial action required by existing §§ 195.401(b) and 195.452(h).

WUTC also was concerned that the discretion built into the proposed definition of ''active corrosion'' would allow operators to ignore corrosion leaks detrimental to public safety or the environment. WUTC suggested we require operators to classify and schedule all corrosion leaks for repair. In response, we believe the purpose of proposed § 195.569(c) is to require operators to look for and cathodically protect certain areas of corrosion before leaks occur. Operator response to leaks, whether due to corrosion or other causes, is not covered by new subpart H. Leak response is governed by existing § 195.401(b) or § 195.452(h), which together require timely corrective action for all unsafe conditions on pipelines subject to Part 195.

Section 195.575. This standard requires electrical isolation to provide for adequate cathodic protection. The standard is based on proposed § 195.571.

Enron expressed support for the proposed rule; however, Tosco believed we should specify the frequency of inspection and electrical tests.

We did not adopt Tosco's comment because the purpose of the proposed inspection and electrical tests is to ensure that electrical isolation is adequate when it is installed. All post-installation inspections and tests of cathodic protection facilities are covered by final § 195.573.

In final paragraph (d), for clarity, we changed the proposed wording ''where a combustible atmosphere is anticipated'' to read ''where a combustible atmosphere is reasonable to foresee.'' Similarly in paragraph (e), we changed the proposed ''where fault currents or unusual risk of lightning may be anticipated'' to read ''where it is reasonable to foresee fault currents or an unusual risk of lightning.''

Section 195.577. The purpose of this standard, which is based on proposed § 195.575, is to minimize the adverse effects of stray currents on pipelines and the effects of impressed currents on adjacent structures. Expressing support for the proposed rule, Tosco stated that the proposed program to identify, test for, and minimize the detrimental effects of stray currents may result in operators participating in corrosion coordinating groups. We agree that such coordination may be necessary for an effective program.

Section 195.579. This standard, proposed as § 195.577, requires operators to investigate the effects of transporting hazardous liquid or carbon dioxide which could corrode the pipeline, and take adequate steps to mitigate corrosion. Tosco suggested that in the final rule we clarify that the investigation may be done by review of operating history. A review of relevant operating history may be a satisfactory investigation in some situations. However, we did not explicitly include this option in final § 195.579. We used the proposed wording because we think it is broad enough to permit operators to use any method of investigation that will provide a sound basis for deciding how to mitigate internal corrosion adequately.

Under proposed § 195.577(d), if operators discover harmful corrosion inside removed pipe, they must investigate further to determine if additional harmful corrosion exists in the vicinity of the removed pipe. Phillips suggested that the extent of further investigation should depend upon the type of corrosion found and whether that corrosion could be expected to extend beyond the exposed segment. We do not believe there is a clear understanding of the relationship between the type of corrosion and the

likelihood of finding similar corrosion in the vicinity of removed pipe to justify limits on a requirement for additional investigation. The effect of corrosive liquids on pipe may be too variable to make such predictions with accuracy. Therefore, we did not adopt Phillips' comment.

Section 195.581. This section, based on proposed § 195.579, modifies an existing requirement (§ 195.416(i)) that all pipelines exposed to the atmosphere must be protected against atmospheric corrosion by a suitable coating. Final § 195.581 gives operators flexibility when deciding to coat pipelines where atmospheric corrosion will be limited to a light surface oxide, or will not affect the safe operation of the pipeline before the next scheduled inspection. Splash zones of offshore pipelines and soil-to-air interfaces of onshore pipelines are omitted from this exception.

Iowa opposed allowing pipe with metal loss to remain unprotected or unrepaired. Iowa stated that public safety should not depend on an operator's judgment of whether a corroding pipe will not fail before the next inspection (which could be up to 3 years). Yet under the proposed rule, if an operator chose not to coat, it would have to show that testing, investigation, or experience supports the decision. In other words, safety would not depend solely on an operator's judgment. Also, the need for coating would be reviewed again in 3 years. A 3-year delay in coating a pipeline judged to be safe should not jeopardize public safety, considering that atmospheric corrosion generally progresses at a slow rate. Therefore, we did not adopt Iowa's comment. Nevertheless, mindful of Iowa's concern, we edited the final wording to clarify that any decision not to coat a particular pipeline must be supported by testing, investigation, or experience relevant to that pipeline.

Tosco called the proposed rule ''a positive revision.'' However, Enron recommended that we add ''active'' as a descriptor of ''atmospheric corrosion.'' It believed the term ''active atmospheric corrosion'' would clarify that the rule does not apply to harmless corrosion. We did not adopt Enron's comment because we think the proposed exceptions will satisfy Enron's objective. Also, ''active atmospheric corrosion'' is a term that may not be in general use in the industry.

Section 195.583. Under this section, proposed as § 195.581, operators must periodically inspect exposed pipelines for atmospheric corrosion, giving particular attention to areas such as soil-to-air interfaces. Onshore pipelines must be inspected every 3 years; and offshore pipelines every year. If any inspection reveals atmospheric corrosion, the operator must protect the pipeline against atmospheric corrosion in accordance with § 195.581.

Enron, Equilon, Iowa, and NACE advocated adding a 3 months grace period to the maximum 3-year inspection interval. We agree that this period is useful to allow operators scheduling and operational flexibility, and included it in final § 195.583.

Tosco wanted to make certain that the proposed remedial action would not be required for light surface oxide. By the cross reference to § 195.581, final § 195.583 allows operators latitude when deciding to coat pipelines which exhibit only a light surface oxide.

AEC urged us to allow operators to use means of assessment other than periodic visual inspection. As an example, AEC commented that by using in-line inspection and a corrosion growth model, operators could predict when a pipeline should be reinspected or repaired. This approach, according to AEC, would enable operators to allocate resources for maximum benefits instead of periodically scattering them across entire systems. AEC's comment indicates two things: first, AEC apparently misunderstood the proposed rule to mandate visual inspection; and second, AEC would like operators themselves to decide appropriate inspection frequencies with the aid of a corrosion growth model. As to the first item, the proposed rule would not limit operators to using visual means of inspection. They could use any means capable of detecting atmospheric corrosion, including in-line inspection devices. As to growth models, AEC did not suggest which model, if any, can successfully predict the growth of atmospheric corrosion on exposed pipelines in changing and varied environments. Furthermore, AEC did not suggest how operators would decide when to inspect exposed pipe that has no history of corrosion. Since the record of this rulemaking proceeding lacks information on these important issues, we have adopted the proposed inspection frequencies as final. However, we would welcome receiving more complete information that could possibly serve as a basis for changing the rule as AEC suggests.

AEC also suggested we extend the proposed maximum inspection interval for onshore pipelines from 3 years to 5 years. It believes that extending the time to 5 years is appropriate because atmospheric corrosion rates are low, and exposed pipe is typically located outside high consequence areas where the maximum interval for reevaluation of pipeline integrity is 5 years (see § 195.452(j)(3)). In developing the proposed rule, we considered whether 3 or 5 years would be the appropriate maximum interval. We proposed 3 years primarily because the ASME B31.4 Code, a widely accepted consensus standards code for hazardous liquid pipelines, specifies a minimum 3-year inspection frequency for atmospheric corrosion onshore. Generally, atmospheric corrosion rates are found to be low and therefore, we must assume this factor was considered when the 3-year consensus standard was adopted. However, a low rate by itself does not seem to justify a longer interval. Also, the 5-year interval for integrity reevaluation in high consequence areas is based on various factors besides corrosion rate, including the time needed to carry out in-line inspections or pressure testing on the pipelines involved. Moreover, the 5-year reevaluation applies in addition to other monitoring frequencies required by part 195, such as annual cathodic protection monitoring and biweekly right-of-way inspections. Yet, we did not intend the 5-year period to serve as a yardstick for determining the adequacy of other monitoring frequencies.

Finally, AEC was concerned about the possible adverse consequences of visually inspecting soil-to-air interfaces on pipe spans over creeks and ravines. AEC suggested that if the interface is on a steep bank, the process of visually examining the pipe could accelerate bank erosion causing water pollution and overstress of the pipeline. We believe the proposed inspection requirement is flexible enough to allow operators to take precautions in inspecting soil-to-air interfaces on steep banks to avoid or minimize the disturbance AEC foresees. Should a disturbance occur that affects the safe operation of the pipeline, the operator would have to correct the problem. We did not change the final rule as a result of this comment.

Section 195.585. This section, which is substantively the same as proposed § 195.583, requires operators to take certain actions to correct corroded pipe. If general corrosion reduces pipe wall thickness to less than that required for the maximum operating pressure of the pipeline or if localized corrosion pitting exists to a degree that leakage might result, the operator must: replace the pipe; repair the pipe; or reduce the maximum operating pressure commensurate with the strength of the pipe. We edited the final rule to clarify that it is the ''maximum operating pressure'' that must be reduced.

Environmental Defense believed this section also should require operators to account for why corrosion has become so advanced. This commenter suggested operators should review their corrosion control systems to ensure that further harmful corrosion will not occur. We believe the combination of cathodic protection criteria under § 195.571 and periodic monitoring under § 195.573 will accomplish the objective of this comment. Whenever an operator discovers a corrosion control deficiency, it must review its corrosion control system and make adjustments as necessary to provide adequate protection against corrosion. If adequate protection cannot be achieved, the pipe involved may have to be replaced.

Section 195.587. This section is based on proposed § 195.585. It authorizes, but does not require, operators to use the widely accepted ASME B31G criteria for determining the remaining strength of corroded steel pipe.

Iowa fully supported the proposed rule. In contrast, WUTC was concerned that because ASME B31G allows wall loss of up to 80 percent without repair or replacement, it does not provide a reasonable measure of strength needed to withstand cyclical stresses, environmental loads, and other combined forces.

Although WUTC is correct, we consider B31G to be a guide to the capability of corroded pipe to withstand internal pressure. Final § 195.587 advises operators that B31G sets limits on use of the criteria. One limitation states that a pipe subject to significant secondary stresses should not be kept in service for the purpose of satisfying the criteria (paragraph 1.2(d)). To ensure that operators consider the effects of secondary stresses, in final § 195.585(a)(1), we added the words ''needed for serviceability'' immediately following ''strength of the pipe.'' Consequently, as a remedy for generally corroded pipe, operators may reduce maximum pressure commensurate with the pipe strength needed for serviceability. In determining the amount of pressure reduction required, operators may use B31G but also must consider any significant secondary stresses that may affect pipe serviceability.

Section 195.589. Under this section, proposed as § 195.587, operators must to keep current records or maps of the location of cathodically protected pipelines; cathodic protection facilities (including anodes) installed after the Final Rule takes effect; and structures bonded to cathodic protection systems. Additionally, operators must keep records of required maintenance activities including inspections, tests, analyses, checks, demonstrations, examinations, investigations, reviews, and surveys. These records must demonstrate the adequacy of corrosion control measures, or that corrosion requiring control measures does not exist. Operators will have to keep these records for at least 5 years, except that records related to § 195.569 (examination of pipeline when exposed); §§ 195.573(a) and (c) (monitoring external corrosion control); and §§ 195.579(b)(3) and (c) (monitoring internal corrosion control) will have to be kept for as long as the pipeline involved is in service.

Commenting on examinations of exposed pipe, Equilon and NACE believed that there is no need to keep records of good pipe for as long as the pipeline remains in service, and that there is no need to keep records of defective pipe after the latest in-line inspection. Equilon and NACE also contended that old records of internal corrosion monitoring are of little benefit without knowledge of flow rates, upstream pipeline operations, fluid properties, and other information. None of these records are generally available. We did not adopt either comment because the proposed records provide a useful history of pipeline condition and are easy to maintain in electronic form. The records may be helpful in assessing corrosion control needs, and could be used as a comparative base for evaluating in-line inspection data.

We also considered the Equilon and NACE comment that subpart H should not require operators to keep records of maintenance activities that occur before subpart H takes effect. Final § 195.589 specifically states that records must be kept for certain maintenance activities ''required by this subpart.'' For example, final § 195.589 does not require operators to keep records of corrosion control monitoring conducted before subpart H takes effect. However, until subpart H takes effect, § 195.404(c)(3) requires records of corrosion control inspections and tests required by subpart F of part 195. Operators must continue to maintain records established under that section for the retention period prescribed.

Tosco believed we should revise § 195.404(c)(3) to indicate that corrosion control records are required by subpart H. However, no confusion about the application of § 195.404(c)(3) to corrosion control should occur because this section applies only to inspections and tests ''required by this subpart,'' meaning, required by subpart F. After new subpart H goes into effect, Subpart F will no longer require corrosion control inspections and tests.

Phillips argued that the current 2-year retention requirement in § 195.404(c)(3) is adequate for auditing compliance, since 2 years of records show the current state of corrosion control. However, as we explained in the NPRM, 5 years is the minimum retention period that will assure the availability of records for our compliance auditing.

Environmental Defense stated that it would help government inspectors determine the adequacy of cathodic protection systems if we required operators to keep records of the location of existing cathodic protection facilities and not just those facilities installed after subpart H takes effect. While this suggestion has merit, we did not propose to require records of existing facilities due to the difficulty of creating such records, particularly for galvanic anode systems. Also, in our experience the lack of such a requirement has not caused a significant problem due to the number of operators who keep records of the location of existing corrosion control facilities.

Format and Organization

In accordance with **Federal Register** guidelines, we drafted final subpart H in an easier to read and understand format. Section headings are in the form of questions. We minimized passive voice and used the word ''you'' as a substitute for ''operator.'' Also, a few proposed sections were eliminated, combined with other sections, or separated into two or more sections. This Final Rule also changes §§ 195.5, 195.402, 195.404 and removes §§ 195.236, 195.238, 195.242, 195.244, 195.414, 195.416, 195.418 to account for the new subpart H.

Advisory Committee Consideration

We presented the NPRM for consideration by the Technical Hazardous Liquid Pipeline Safety Standards Committee (THLPSSC) at a meeting in Washington, DC on February 7, 2001 (66 FR 132; Jan. 2, 2001). The THLPSSC is RSPA's statutory advisory committee for hazardous liquid pipeline safety. The committee has 15 members, representing industry, government, and the public. Each member is qualified to consider the technical feasibility, reasonableness, cost-effectiveness, and practicability of proposed pipeline safety standards. The committee voted unanimously to approve proposed subpart H but unanimously recommended that we require operators of bare or ineffectively coated pipe to inspect the pipe for external corrosion every 3 years. Our treatment of this

recommendation is discussed in the Discussion of Comments section under section 195.573. A transcript of the February 7, 2001, meeting is available in Docket No. RSPA–98–4470.

Regulatory Analyses and Notices

Executive Order 12866 and DOT Policies and Procedures. RSPA does not consider this rulemaking to be a significant regulatory action under section 3(f) of Executive Order 12866 (58 FR 51735; Oct. 4, 1993). Therefore, the Office of Management and Budget (OMB) has not received a copy of this rulemaking to review. RSPA also does not consider this rulemaking to be significant under DOT regulatory policies and procedures (44 FR 11034: February 26, 1979).

We prepared a Final Regulatory Evaluation of the final rules and a copy is in the docket. The evaluation states that the rules are, on the whole, comparable either to existing safety standards currently in part 195 for hazardous liquid pipelines or to existing safety standards in part 192 for gas pipelines. The evaluation also states that the information presented at public meetings and meetings with industry and state representatives strongly suggests that imposing gas pipeline safety standards for corrosion control on hazardous liquid pipelines would not require a significant departure from customary safety practices on liquid pipelines.

An important feature of the final rules not found in part 192 or part 195 is the reference to cathodic protection criteria in NACE Standard RP0169–96. The evaluation states that these criteria are well known and widely followed throughout the industry, as indicated by meetings with industry representatives and by the voluntary standards in the ASME B31.4 Code. The evaluation further states that operators who do not now apply the NACE criteria are likely to apply the criteria in appendix D of part 192. The final rules would allow use of appendix D criteria under conditions stated in the NACE Standard. The evaluation concludes that there should be only minimal additional cost, if any, for operators to comply with the final rules.

Final § 195.563(c) (protecting effectively coated pipelines), § 195.567 (test leads), and § 195.573(a)(2) (monitoring cathodic protection by close-interval surveys or comparable technology) are changed from the proposed rules. However, the changes are consistent with industry practices and should not result in more than minimal additional costs.

Regulatory Flexibility Act. The final rules are consistent with customary practices for corrosion control in the hazardous liquid and carbon dioxide pipeline industry. Therefore, based on the facts available about the anticipated impacts of this rulemaking, I certify, pursuant to section 605 of the Regulatory Flexibility Act (5 U.S.C. 605), that this rulemaking will not have a significant impact on a substantial number of small entities.

Executive Order 13084. The final rules have been analyzed in accordance with the principles and criteria contained in Executive Order 13084, ''Consultation and Coordination with Indian Tribal Governments.'' Because the rules will not significantly or uniquely affect the communities of the Indian tribal governments and will not impose substantial direct compliance costs, the funding and consultation requirements of Executive Order 13084 do not apply.

Paperwork Reduction Act. Section 195.589 contains minor additional information collection requirements. Operators will be required to record the location of certain newly installed protection facilities, and keep these records for as long as the pipeline concerned is in service. In addition, records of inspections, tests, and other maintenance actions will have to be kept for as long as the pipeline is in service or for 5 years, depending on the nature of the information recorded. The present minimum retention period for records of inspections and tests is 2 years or the prescribed interval of test or inspection, whichever is longer (up to 5 years in some cases).

Hazardous liquid pipeline operators are required to keep records under Information Collection 2137–0047, Transportation of Hazardous Liquids by Pipeline: Record Keeping and Reporting Requirements. Operators already maintain records of the location of their protection facilities for as long as the pipeline is in service. They do so to find the facilities for their own purposes and to carry out existing monitoring requirements in part 195. Also, we believe the burden of retaining inspection, test, and survey records for the longer period will be minimal. These records are largely computerized and maintaining these records in a computer file represents very minimal costs. Because the additional paperwork burdens of this final rule are likely to be minimal, we believe that submitting an analysis of the burdens to OMB under the Paperwork Reduction Act is unnecessary.

Unfunded Mandates Reform Act of 1995. This rulemaking will not impose unfunded mandates under the Unfunded Mandates Reform Act of 1995. It will not result in costs of $100 million or more to either State, local, or tribal governments, in the aggregate, or to the private sector, and is the least burdensome alternative that achieves the objective of the rule.

National Environmental Policy Act. We have analyzed the final rules for purposes of the National Environmental Policy Act (42 U.S.C. 4321 *et seq.*). Because the rules parallel present requirements or practices, we have determined they will not significantly affect the quality of the human environment. An environmental assessment document is available for review in the docket. We also made a finding of no significant impact.

Impact on Business Processes and Computer Systems. We do not want to impose new requirements that mandate business process changes when the resources necessary to implement those requirements could otherwise be applied to ''Y2K'' or related computer problems. The final rules do not mandate business process changes or require modifications to computer systems. Because the rules do not affect the ability of organizations to respond to those problems, we have not delayed the effectiveness of the requirements.

Executive Order 13132. The final rules have been analyzed in accordance with the principles and criteria contained in Executive Order 13132 (''Federalism''). The final rules do not contain any regulation that (1) has substantial direct effects on the States, the relationship between the national government and the States, or the distribution of power and responsibilities among the various levels of government; (2) imposes substantial direct compliance costs on State and local governments; or (3) preempts state law. Therefore, the consultation and funding requirements of Executive Order 13132 do not apply. Nevertheless, during our review of the existing corrosion control standards, representatives of state pipeline safety agencies gave us advice both in private sessions and in the two public meetings we held. In addition, our pipeline safety advisory committees, which include representatives of state governments, were, on two occasions in 1999, briefed on the corrosion control review project.

Executive Order 13211. This rulemaking is not a ''Significant energy action'' under Executive Order 13211. It is not a significant regulatory action under Executive Order 12866 and is not likely to have a significant adverse effect on the supply, distribution, or use of energy. Further, this rulemaking has not

been designated by the Administrator of the Office of Information and Regulatory Affairs as a significant energy action.

List of Subjects in 49 CFR Part 195

Ammonia, Carbon dioxide, Incorporation by reference, Petroleum, Pipeline safety, Reporting and recordkeeping requirements.

In consideration of the foregoing, 49 CFR part 195 is amended as follows:

PART 195—[AMENDED]

1. The authority citation for part 195 continues to read as follows:

Authority: 49 U.S.C. 5103, 60102, 60104, 60108, 60109, 60118; and 49 CFR 1.53.

2. Section 195.3 is amended by adding paragraphs (b)(8) and (c)(7) to read as follows:

§ 195.3 Matter incorporated by reference.

* * * * *

(b) * * *

(8) NACE International, 1440 South Creek Drive, Houston, TX 77084.

(c) * * *

(7) NACE International (NACE):

(i) NACE Standard RP0169–96, ''Control of External Corrosion on Underground or Submerged Metallic Piping Systems' (1996).

(ii) [Reserved]

3. Section 195.5(b) is revised to read as follows:

§ 195.5 Conversion to service subject to this part.

* * * * *

(b) A pipeline that qualifies for use under this section need not comply with the corrosion control requirements of subpart H of this part until 12 months after it is placed into service, notwithstanding any previous deadlines for compliance.

* * * * *

4. Section 195.402(c)(3) is revised to read as follows:

§ 195.402 Procedural manual for operations, maintenance, and emergencies.

* * * * *

(c) * * *

(3) Operating, maintaining, and repairing the pipeline system in accordance with each of the requirements of this subpart and subpart H of this part.

* * * * *

§ 195.404 [Amended]

5. In § 195.404, paragraph (a)(1)(v) is removed, and paragraphs (a)(1)(vi) through (a)(1)(viii) are redesignated as paragraphs (a)(1)(v) through (a)(1)(vii).

§§ 195.236, 195.238, 195.242, 195.244, 195.414, 195.416, 195.418 [Removed]

6. The following sections are removed and reserved: §§ 195.236, 195.238, 195.242, 195.244, 195.414, 195.416, and 195.418.

7. Subpart H is added to read as follows:

Subpart H—Corrosion Control

Sec.

195.551 What do the regulations in this subpart cover?
195.553 What special definitions apply to this subpart?
195.555 What are the qualifications for supervisors?
195.557 Which pipelines must have coating for external corrosion control?
195.559 What coating material may I use for external corrosion control?
195.561 When must I inspect pipe coating used for external corrosion control?
195.563 Which pipelines must have cathodic protection?
195.565 How do I install cathodic protection on breakout tanks?
195.567 Which pipelines must have test leads and how do I install and maintain the leads?
195.569 Do I have to examine exposed portions of buried pipelines?
195.571 What criteria must I use to determine the adequacy of cathodic protection?
195.573 What must I do to monitor external corrosion control?
195.575 Which facilities must I electrically isolate and what inspections, tests, and safeguards are required?
195.577 What must I do to alleviate interference currents?
195.579 What must I do to mitigate internal corrosion?
195.581 Which pipelines must I protect against atmospheric corrosion and what coating material may I use?
195.583 What must I do to monitor atmospheric corrosion control?
195.585 What must I do to correct corroded pipe?
195.587 What methods are available to determine the strength of corroded pipe?
195.589 What corrosion control information do I have to maintain?

Subpart H—Corrosion Control

§ 195.551 What do the regulations in this subpart cover?

This subpart prescribes minimum requirements for protecting steel pipelines against corrosion.

§ 195.553 What special definitions apply to this subpart?

As used in this subpart—

Active corrosion means continuing corrosion which, unless controlled, could result in a condition that is detrimental to public safety or the environment.

Buried means covered or in contact with soil.

Electrical survey means a series of closely spaced pipe-to-soil readings over a pipeline that are subsequently analyzed to identify locations where a corrosive current is leaving the pipeline.

Pipeline environment includes soil resistivity (high or low), soil moisture (wet or dry), soil contaminants that may promote corrosive activity, and other known conditions that could affect the probability of active corrosion.

You means operator.

§ 195.555 What are the qualifications for supervisors?

You must require and verify that supervisors maintain a thorough knowledge of that portion of the corrosion control procedures established under § 195.402(c)(3) for which they are responsible for insuring compliance.

§ 195.557 Which pipelines must have coating for external corrosion control?

Except bottoms of aboveground breakout tanks, each buried or submerged pipeline must have an external coating for external corrosion control if the pipeline is—

(a) Constructed, relocated, replaced, or otherwise changed after the applicable date in § 195.401(c), not including the movement of pipe covered by § 195.424; or

(b) Converted under § 195.5 and—

(1) Has an external coating that substantially meets § 195.559 before the pipeline is placed in service; or

(2) Is a segment that is relocated, replaced, or substantially altered.

§ 195.559 What coating material may I use for external corrosion control?

Coating material for external corrosion control under § 195.557 must—

(a) Be designed to mitigate corrosion of the buried or submerged pipeline;

(b) Have sufficient adhesion to the metal surface to prevent under film migration of moisture;

(c) Be sufficiently ductile to resist cracking;

(d) Have enough strength to resist damage due to handling and soil stress;

(e) Support any supplemental cathodic protection; and

(f) If the coating is an insulating type, have low moisture absorption and provide high electrical resistance.

§ 195.561 When must I inspect pipe coating used for external corrosion control?

(a) You must inspect all external pipe coating required by § 195.557 just prior to lowering the pipe into the ditch or submerging the pipe.

(b) You must repair any coating damage discovered.

§ 195.563 Which pipelines must have cathodic protection?

(a) Each buried or submerged pipeline that is constructed, relocated, replaced, or otherwise changed after the applicable date in § 195.401(c) must have cathodic protection. The cathodic protection must be in operation not later than 1 year after the pipeline is constructed, relocated, replaced, or otherwise changed, as applicable.

(b) Each buried or submerged pipeline converted under § 195.5 must have cathodic protection if the pipeline—

(1) Has cathodic protection that substantially meets § 195.571 before the pipeline is placed in service; or

(2) Is a segment that is relocated, replaced, or substantially altered.

(c) All other buried or submerged pipelines that have an effective external coating must have cathodic protection.[1] Except as provided by paragraph (d) of this section, this requirement does not apply to breakout tanks and does not apply to buried piping in breakout tank areas and pumping stations until December 29, 2003.

(d) Bare pipelines, breakout tank areas, and buried pumping station piping must have cathodic protection in places where regulations in effect before January 28, 2002 required cathodic protection as a result of electrical inspections. See previous editions of this part in 49 CFR, parts 186 to 199.

(e) Unprotected pipe must have cathodic protection if required by § 195.573(b).

§ 195.565 How do I install cathodic protection on breakout tanks?

After October 2, 2000, when you install cathodic protection under § 195.563(a) to protect the bottom of an aboveground breakout tank of more than 500 barrels (79.5m^3) capacity built to API Specification 12F, API Standard 620, or API Standard 650 (or its predecessor Standard 12C), you must install the system in accordance with API Recommended Practice 651. However, installation of the system need not comply with API Recommended Practice 651 on any tank for which you note in the corrosion control procedures established under § 195.402(c)(3) why compliance with all or certain provisions of API Recommended Practice 651 is not necessary for the safety of the tank.

[1] A pipeline does not have an effective external coating material if the current required to cathodically protect the pipeline is substantially the same as if the pipeline were bare.

§ 195.567 Which pipelines must have test leads and what must I do to install and maintain the leads?

(a) *General.* Except for offshore pipelines, each buried or submerged pipeline or segment of pipeline under cathodic protection required by this subpart must have electrical test leads for external corrosion control. However, this requirement does not apply until December 27, 2004 to pipelines or pipeline segments on which test leads were not required by regulations in effect before January 28, 2002.

(b) *Installation.* You must install test leads as follows:

(1) Locate the leads at intervals frequent enough to obtain electrical measurements indicating the adequacy of cathodic protection.

(2) Provide enough looping or slack so backfilling will not unduly stress or break the lead and the lead will otherwise remain mechanically secure and electrically conductive.

(3) Prevent lead attachments from causing stress concentrations on pipe.

(4) For leads installed in conduits, suitably insulate the lead from the conduit.

(5) At the connection to the pipeline, coat each bared test lead wire and bared metallic area with an electrical insulating material compatible with the pipe coating and the insulation on the wire.

(c) *Maintenance.* You must maintain the test lead wires in a condition that enables you to obtain electrical measurements to determine whether cathodic protection complies with § 195.571.

§ 195.569 Do I have to examine exposed portions of buried pipelines?

Whenever you have knowledge that any portion of a buried pipeline is exposed, you must examine the exposed portion for evidence of external corrosion if the pipe is bare, or if the coating is deteriorated. If you find external corrosion requiring corrective action under § 195.585, you must investigate circumferentially and longitudinally beyond the exposed portion (by visual examination, indirect method, or both) to determine whether additional corrosion requiring remedial action exists in the vicinity of the exposed portion.

§ 195.571 What criteria must I use to determine the adequacy of cathodic protection?

Cathodic protection required by this subpart must comply with one or more of the applicable criteria and other considerations for cathodic protection contained in paragraphs 6.2 and 6.3 of NACE Standard RP0169–96 (incorporated by reference, see § 195.3).

§ 195.573 What must I do to monitor external corrosion control?

(a) *Protected pipelines.* You must do the following to determine whether cathodic protection required by this subpart complies with § 195.571:

(1) Conduct tests on the protected pipeline at least once each calendar year, but with intervals not exceeding 15 months. However, if tests at those intervals are impractical for separately protected short sections of bare or ineffectively coated pipelines, testing may be done at least once every 3 calendar years, but with intervals not exceeding 39 months.

(2) Identify before December 29, 2003 or not more than 2 years after cathodic protection is installed, whichever comes later, the circumstances in which a close-interval survey or comparable technology is practicable and necessary to accomplish the objectives of paragraph 10.1.1.3 of NACE Standard RP0169–96 (incorporated by reference, see § 195.3).

(b) *Unprotected pipe.* You must reevaluate your unprotected buried or submerged pipe and cathodically protect the pipe in areas in which active corrosion is found, as follows:

(1) Determine the areas of active corrosion by electrical survey, or where an electrical survey is impractical, by other means that include review and analysis of leak repair and inspection records, corrosion monitoring records, exposed pipe inspection records, and the pipeline environment.

(2) For the period in the first column, the second column prescribes the frequency of evaluation.

Period	Evaluation frequency
Before December 29, 2003.	At least once every 5 calendar years, but with intervals not exceeding 63 months.
Beginning December 29, 2003.	At least once every 3 calendar years, but with intervals not exceeding 39 months.

(c) *Rectifiers and other devices.* You must electrically check for proper performance each device in the first column at the frequency stated in the second column.

Device	Check frequency
Rectifier	At least six times each calendar year, but with intervals not exceeding 2½ months.
Reverse current switch.	
Diode	
Interference bond whose failure would jeopardize structural protection.	
Other interference bond.	At least once each calendar year, but with intervals not exceeding 15 months.

(d) *Breakout tanks.* You must inspect each cathodic protection system used to control corrosion on the bottom of an aboveground breakout tank to ensure that operation and maintenance of the system are in accordance with API Recommended Practice 651. However, this inspection is not required if you note in the corrosion control procedures established under § 195.402(c)(3) why compliance with all or certain operation and maintenance provisions of API Recommended Practice 651 is not necessary for the safety of the tank.

(e) *Corrective action.* You must correct any identified deficiency in corrosion control as required by § 195.401(b). However, if the deficiency involves a pipeline in an integrity management program under § 195.452, you must correct the deficiency as required by § 195.452(h).

§ 195.575 Which facilities must I electrically isolate and what inspections, tests, and safeguards are required?

(a) You must electrically isolate each buried or submerged pipeline from other metallic structures, unless you electrically interconnect and cathodically protect the pipeline and the other structures as a single unit.

(b) You must install one or more insulating devices where electrical isolation of a portion of a pipeline is necessary to facilitate the application of corrosion control.

(c) You must inspect and electrically test each electrical isolation to assure the isolation is adequate.

(d) If you install an insulating device in an area where a combustible atmosphere is reasonable to foresee, you must take precautions to prevent arcing.

(e) If a pipeline is in close proximity to electrical transmission tower footings, ground cables, or counterpoise, or in other areas where it is reasonable to foresee fault currents or an unusual risk of lightning, you must protect the pipeline against damage from fault currents or lightning and take protective measures at insulating devices.

§ 195.577 What must I do to alleviate interference currents?

(a) For pipelines exposed to stray currents, you must have a program to identify, test for, and minimize the detrimental effects of such currents.

(b) You must design and install each impressed current or galvanic anode system to minimize any adverse effects on existing adjacent metallic structures.

§ 195.579 What must I do to mitigate internal corrosion?

(a) *General.* If you transport any hazardous liquid or carbon dioxide that would corrode the pipeline, you must investigate the corrosive effect of the hazardous liquid or carbon dioxide on the pipeline and take adequate steps to mitigate internal corrosion.

(b) *Inhibitors.* If you use corrosion inhibitors to mitigate internal corrosion, you must—

(1) Use inhibitors in sufficient quantity to protect the entire part of the pipeline system that the inhibitors are designed to protect;

(2) Use coupons or other monitoring equipment to determine the effectiveness of the inhibitors in mitigating internal corrosion; and

(3) Examine the coupons or other monitoring equipment at least twice each calendar year, but with intervals not exceeding 7½ months.

(c) *Removing pipe.* Whenever you remove pipe from a pipeline, you must inspect the internal surface of the pipe for evidence of corrosion. If you find internal corrosion requiring corrective action under § 195.585, you must investigate circumferentially and longitudinally beyond the removed pipe (by visual examination, indirect method, or both) to determine whether additional corrosion requiring remedial action exists in the vicinity of the removed pipe.

(d) *Breakout tanks.* After October 2, 2000, when you install a tank bottom lining in an aboveground breakout tank built to API Specification 12F, API Standard 620, or API Standard 650 (or its predecessor Standard 12C), you must install the lining in accordance with API Recommended Practice 652. However, installation of the lining need not comply with API Recommended Practice 652 on any tank for which you note in the corrosion control procedures established under § 195.402(c)(3) why compliance with all or certain provisions of API Recommended Practice 652 is not necessary for the safety of the tank.

§ 195.581 Which pipelines must I protect against atmospheric corrosion and what coating material may I use?

(a) You must clean and coat each pipeline or portion of pipeline that is exposed to the atmosphere, except pipelines under paragraph (c) of this section.

(b) Coating material must be suitable for the prevention of atmospheric corrosion.

(c) Except portions of pipelines in offshore splash zones or soil-to-air interfaces, you need not protect against atmospheric corrosion any pipeline for which you demonstrate by test, investigation, or experience appropriate to the environment of the pipeline that corrosion will—

(1) Only be a light surface oxide; or

(2) Not affect the safe operation of the pipeline before the next scheduled inspection.

§ 195.583 What must I do to monitor atmospheric corrosion control?

(a) You must inspect each pipeline or portion of pipeline that is exposed to the atmosphere for evidence of atmospheric corrosion, as follows:

If the pipeline is located:	Then the frequency of inspection is:
Onshore	At least once every 3 calendar years, but with intervals not exceeding 39 months.
Offshore	At least once each calendar year, but with intervals not exceeding 15 months.

(b) During inspections you must give particular attention to pipe at soil-to-air interfaces, under thermal insulation, under disbonded coatings, at pipe supports, in splash zones, at deck penetrations, and in spans over water.

(c) If you find atmospheric corrosion during an inspection, you must provide protection against the corrosion as required by § 195.581.

§ 195.585 What must I do to correct corroded pipe?

(a) *General corrosion.* If you find pipe so generally corroded that the remaining wall thickness is less than that required for the maximum operating pressure of the pipeline, you must replace the pipe. However, you need not replace the pipe if you—

(1) Reduce the maximum operating pressure commensurate with the strength of the pipe needed for serviceability based on actual remaining wall thickness; or

(2) Repair the pipe by a method that reliable engineering tests and analyses show can permanently restore the serviceability of the pipe.

(b) *Localized corrosion pitting.* If you find pipe that has localized corrosion pitting to a degree that leakage might result, you must replace or repair the pipe, unless you reduce the maximum operating pressure commensurate with the strength of the pipe based on actual remaining wall thickness in the pits.

§ 195.587 What methods are available to determine the strength of corroded pipe?

Under § 195.585, you may use the procedure in ASME B31G, ''Manual for Determining the Remaining Strength of Corroded Pipelines,'' or the procedure developed by AGA/Battelle, ''A Modified Criterion for Evaluating the Remaining Strength of Corroded Pipe (with RSTRENG disk),'' to determine the strength of corroded pipe based on actual remaining wall thickness. These procedures apply to corroded regions that do not penetrate the pipe wall, subject to the limitations set out in the respective procedures.

§ 195.589 What corrosion control information do I have to maintain?

(a) You must maintain current records or maps to show the location of—

(1) Cathodically protected pipelines;

(2) Cathodic protection facilities, including galvanic anodes, installed after January 28, 2002; and

(3) Neighboring structures bonded to cathodic protection systems.

(b) Records or maps showing a stated number of anodes, installed in a stated manner or spacing, need not show specific distances to each buried anode.

(c) You must maintain a record of each analysis, check, demonstration, examination, inspection, investigation, review, survey, and test required by this subpart in sufficient detail to demonstrate the adequacy of corrosion control measures or that corrosion requiring control measures does not exist. You must retain these records for at least 5 years, except that records related to §§ 195.569, 195.573(a) and (b), and 195.579(b)(3) and (c) must be retained for as long as the pipeline remains in service.

Issued in Washington, DC on December 19, 2001.

Ellen G. Engleman,

Administrator.

[FR Doc. 01–31655 Filed 12–26–01; 8:45 am]

BILLING CODE 4910–60–P

Federal Register

Thursday,
December 27, 2001

Part IV

Department of the Interior

Office of Surface Mining Reclamation and Enforcement

30 CFR Part 938

Pennsylvania Regulatory Program; Final Rule

DEPARTMENT OF THE INTERIOR

Office of Surface Mining Reclamation and Enforcement

30 CFR Part 938

[PA–122–FOR]

Pennsylvania Regulatory Program

AGENCY: Office of Surface Mining Reclamation and Enforcement (OSM), Interior.

ACTION: Final rule.

SUMMARY: OSM is approving, with the exceptions noted below, an amendment to the Pennsylvania program. Pennsylvania is amending its Bituminous Mine Subsidence and Land Conservation Act (BMSLCA) and implementing regulations at 25 Pa. Code Chapter 89 to require underground mine operators to repair or compensate landowners for subsidence damage to certain structures and facilities and to restore or replace water supplies adversely impacted by underground mining operations.

EFFECTIVE DATE: December 27, 2001.

FOR FURTHER INFORMATION CONTACT: Beverly Brock, Acting Director, Office of Surface Mining Reclamation and Enforcement, Harrisburg Field Office, Harrisburg Transportation Center, Third Floor, Suite 3C, 4th and Market Streets, Harrisburg, Pennsylvania 17101, Telephone: (717) 782–4036.

SUPPLEMENTARY INFORMATION:

I. Background on the Pennsylvania Program
II. Submission of the Amendment
III. Director's Findings
A. Changes to the BMSLCA
B. Changes to the Regulations at 25 Pa. Code Chapter 89
IV. Summary and Disposition of Comments
V. Director's Decision
VI. Effect of Director's Decision
VII. Procedural Determinations

I. Background on the Pennsylvania Program

Section 503(a) of the Surface Mining Control and Reclamation Act (SMCRA or the Act) permits a State to assume primacy for the regulation of surface coal mining and reclamation operations on non-Federal and non-Indian lands within its borders by demonstrating that its State program includes, among other things, ''* * * a State law which provides for the regulation of surface coal mining and reclamation operations in accordance with the requirements of the Act; and rules and regulations consistent with regulations issued by the Secretary pursuant to the Act.'' See 30 U.S.C. 1253(a)(1) and (7). On the basis of these criteria, the Secretary of the Interior conditionally approved the Pennsylvania program on July 30, 1982. You can find background information on the Pennsylvania program, including the Secretary's findings, the disposition of comments, and the conditions of the approval in the July 30, 1982, **Federal Register** (47 FR 33050). You can find subsequent actions concerning the Pennsylvania program and previous amendments at 30 CFR 938.11, 938.12, 938.15 and 938.16.

II. Submission of the Amendment

By letter dated July 29, 1998 (Administrative Record Number PA 841.07), the Pennsylvania Department of Environmental Protection (PADEP) submitted an amendment to its approved permanent regulatory program pursuant to the federal regulations at 30 CFR 732.17(b).

We announced the proposed rulemaking in the August 25, 1998, **Federal Register** (63 FR 45199). The rule described Pennsylvania's proposal to modify the BMSLCA through Act 54 and also described Pennsylvania's proposal to make changes to its regulations at 25 Pa. Code Chapter 89, titled ''Underground Mining of Coal and Coal Preparation Facilities.'' The first public comment period closed on September 24, 1998. In response to requests from three people, the comment period was reopened on September 25, 1998, (63 FR 51324). This second comment period closed on October 19, 1998. A public hearing was held on October 13, 1998, at Washington, Pennsylvania (Administrative record numbers PA 841.21, 841.22, and 841.31).

After reviewing the written comments we received, the information received at the public hearing and conducting our own review of the amendment, we sent two letters to Pennsylvania requesting clarification of numerous issues. The letters were sent on June 21, 1999, (Administrative record number PA 841.32) and June 23, 2000, (Administrative record number PA 841.40). Pennsylvania responded to the first letter on June 1, 2000, (Administrative record number PA 841.39) and to the second on July 14, 2000 (Administrative record number PA 841.41). The substance of the issues and Pennsylvania's responses are discussed below.

We reopened the public comment period on December 8, 2000, (65 FR 76954) to seek comment on Pennsylvania's response to our two letters. Two commenters responded to this reopening. Their comments and our response are found in the response to comments section.

III. Director's Findings

Note: Throughout this final rule, unless otherwise indicated, ''Director'' refers to the Director of OSM.

We have noted throughout this final rule that we are not approving or are requiring amendments to some of Pennsylvania's statute and regulations regarding repair or compensation for structural damage and restoration or replacement of water supplies. We wish to make it clear that any of the sections not approved or required to be amended only apply to structures and water supplies that are protected under EPAct and do not apply to structures or water supplies that are not protected by EPAct.

A. Changes to the BMSLCA

Set forth in the explanation below and the table that follows, pursuant to SMCRA and the federal regulations at 30 CFR 732.15 and 732.17 are the Director's findings concerning the proposed amendments to the BMSLCA. The Director's reasons for approving, conditionally approving, requiring amendments to, or not approving sections of, the BMSLCA are noted. The sections are listed in the order they appear in the BMSLCA for easy reference.

Section 4 (52 P.S. 1406.4). This section was repealed by Act 54. Prior to repeal, the section provided protection from subsidence from bituminous coal mining to certain structures in place as of April 27, 1966. The Director is approving the repeal of this section because it had afforded a level of protection to structures beyond that contained in the federal regulations. The repeal of section 4 means that the BMSLCA affords the same level of protection to structures regardless of when constructed, which is consistent with the federal regulations. Thus, the repeal of this section does not render the Pennsylvania program less effective than the federal program.

Section 5(b) (52 P.S. 1406.5(b)). The full text of section 5(b) prior to modification by Act 54 read, ''The department shall require the applicant to file a bond or other security as recited in section 6(b) to insure the applicant's faithful performance of mining or mining operations in accordance with the provisions of section 4.'' The section was modified by Act 54 to change the reference from section 6(b) to 6(a) and to delete the phrase ''in accordance with the provisions of section 4.''

The Director is approving the deletion of the phrase ''in accordance with the provisions of section 4'' because it was made in response to the deletion of section 4, which was approved for the reasons given above. However, the reference to section 6(a) is incorrect because section 6(a) was deleted. The correct reference should have remained section 6(b). The Director is requiring Pennsylvania to correct the reference to the bonding requirements.

Section 5.1(a)(1) (52 P.S. 1406.5a(a)(1)). This section requires that a water supply adversely impacted by an underground mine be replaced ''with a permanent alternate source which adequately serves the premining uses of the water supply or any reasonably foreseeable uses of the water supply.'' The implementing regulations at 25 Pa. Code 89.145a(b) include identical language.

Pennsylvania's implementing regulations at 25 Pa. Code 89.145a(f)(3) also specify that—

A restored or replaced water supply will be deemed adequate in quantity if it meets one of the following:

(i) It delivers the amount of water necessary to satisfy the water user's needs and the demands of any reasonably foreseeable uses.

(ii) It is established through a connection to a public water supply system which is capable of delivering the amount of water necessary to satisfy the water user's needs and any reasonably foreseeable uses.

(iii) For purposes of this paragraph and with respect to agricultural water supplies, the term reasonably foreseeable uses includes the reasonable expansion of use where the water supply available prior to mining exceeded the farmer's actual use.

The Director is approving paragraph (iii) because it provides for protection for agricultural uses that are not protected under the federal regulations and is in accordance with 505(b) of SMCRA.

By letter dated June 21, 1999, we originally expressed concern with 25 Pa. Code 89.145a(f)(3)(i), stating that:

> Pennsylvania's proposed statute [and rule] appears to be less effective than the federal rules because it allows evaluation of the adequacy of a replacement water supply quantity to be based on use rather than the premining quantity. Through this statute [and rule], Pennsylvania would allow restoration to a level that is adequate for premining use, but this could be significantly less than the premining quantity and quality of the supply.

Pennsylvania responded by letter dated June 1, 2000:

> OSM believes that a replacement water supply must have a yield equal to or greater than the yield of the premining water supply in order to be considered adequate. This position allows no consideration for the quantity of water actually used by the landowner or water user.
>
> In addition, it is important to recognize that Pennsylvania's law requires an accounting of foreseeable uses when determining the adequacy of replacement water supplies. If the water user's premining needs were only 4 gpm but the user had plans that would utilize the full 10 gpm capacity of the well, the replacement supply would have to produce the 10 gpm under the Pennsylvania program.

After reconsidering the preamble to the definition of ''replacement of water supply'' at 30 CFR 701.5 and our comments and Pennsylvania's responses on the proposed Pennsylvania program, we recognize that the definition of ''replacement water supply'' does not specify how equivalency is to be determined and that there may be alternate approaches to determining whether a water supply has been appropriately replaced. As discussed more fully below, we considered whether actual and reasonably foreseeable use, including potential uses, would be a means of determining equivalency. We then reviewed the degree to which Pennsylvania's ''adequate quantity'' standard under 25 Pa. Code 89.145a(f)(3)(i) and (ii) would meet actual and reasonably foreseeable use. Finally, we examined the degree to which the Pennsylvania standard would ensure that the replacement water source would be equivalent to the premining source, and the replacement delivery system would be equivalent to the premining delivery system.

Use as a Standard: The preamble to the definition of ''replacement of water supply'' at 30 CFR 701.5 contains various analyses as to the scope of the replacement requirement. The following discussion foreclosed basing replacement supply quantity on just the actual premining use:

> Commenters argue that the definition should state that the replacement water supply need only provide the quantity and quality required for actual use. * * * OSM maintains that the provision of water quality and quantity equivalent to that of premining supplies is plainly required by the term ''replacement'' [in EPAct].

60 FR 16726.

Additional guidance is found in the preamble at 60 FR 16727, which specifies that ''[w]here the spring or well also serves other purposes, the quantity of the replacement supply only needs to be equivalent to the premining water supply for drinking, domestic, or residential use.'' Thus, absolute equality to the premining quantity was not deemed to be required in all instances.

We then find a discussion on the requirement that replacement of the water supply must account for uses by future owners. When we were discussing the option of not replacing the water delivery system, we said that an equivalent water source must be available for development ''so that the current owner or his or her successor could *utilize* the water if desired in the future.'' 60 FR 16727 (emphasis added).

Finally, to harmonize these statements, we look to yet another preamble statement, which appears to endorse consideration of the level of both actual and reasonably foreseeable use as a means of determining equivalency. In discussing the portion of the definition that provides an option under which the permittee would not need to replace the water supply delivery system, the preamble states: ''This provision [identification of a suitable alternative water source] would ensure that all coal mining operations must be conducted so that water resources remain to support the existing and proposed use of the land.'' 60 FR 16727. In the context of the definition, ''proposed use'' refers to the approved postmining land use. Although the postmining land use requirements of 30 CFR 817.133 generally do not apply to areas overlying underground workings, since those areas usually do not lie within the permit area, the Pennsylvania term ''any reasonably foreseeable uses'' is the functional equivalent of the term postmining land use for lands outside the permit area. Although this statement was not specifically addressed at the issue of interpreting equivalency, it does indicate contemplation and acceptance of the standard proposed by Pennsylvania.

Since the definition of ''replacement of water supply'' at 30 CFR 701.5 does not specify how equivalency is to be determined, OSM finds that it can approve a water supply replacement provision that relies on actual and reasonably foreseeable use as a standard as no less effective than the federal rules with respect to water quantity.

The Pennsylvania ''Adequate Quantity'' Standard: The Pennsylvania statute at section 5.1(a)(1) (52 P.S. 1406.5a(a)(1)), requires that a water supply adversely impacted by an underground mine be replaced ''with a permanent alternate source that adequately serves the premining uses of the water supply or any reasonably foreseeable uses of the water supply.'' The implementing regulations at 25 Pa. Code 89.145a(b) include identical language. As noted above, Pennsylvania's regulations further define a restored or replaced supply as adequate in quantity if (i) it delivers the

amount of water to satisfy the water user's needs and the demands of any reasonably foreseeable uses or (ii) is a public water supply system that delivers the amount of water to satisfy the water user's needs and the demands of any reasonably foreseeable uses. 25 Pa. Code 89.145a(f)(3)(i) and (ii). Pennsylvania limits ''public water supply systems'' to those defined at 25 Pa. Code 89.5.

Responding to OSM concerns on 25 Pa. Code 89.145a(f)(3)(i), Pennsylvania commented that the replacement water supply ''must be capable of satisfying the premining uses * * * and, in addition, any foreseeable uses the landowner or water user had intended to develop.'' With regard to public water supplies as a possible replacement, Pennsylvania stated that ''[a] connection to a public water supply system is a reasonable means of replacement if the public water supply system can satisfy the water user's existing and reasonably foreseeable needs and is adequate for the purposes served.'' 28 Pennsylvania Bulletin (Pa.B.) 2777.

To the extent that Pennsylvania's letter and the Pennsylvania Bulletin language could be read to indicate that the user must have plans to demonstrate reasonably foreseeable uses of a water supply or is limited to the current user, we disagree with these interpretations. The proper standard is whether there is a reasonably foreseeable use for the premining capacity, not whether actual plans exist or the uses are limited to the current owner. Actual plans or the current owner's uses (existing and foreseeable) are merely two ways to determine foreseeable uses. As previously stated, the replaced water supply must take into account not only the actual use but also any potential uses by a future owner. As a consequence, OSM is approving the language under section 5.1(a)(1) (52 P.S. 1406.5a(a)(1)), and 25 Pa. Code sections 89.145a(b), and 89.145a(f)(3)(i) and (ii), to the extent that Pennsylvania both interprets and implements the provisions consistent with the definition of ''replacement of water supply'' at 30 CFR 701.5 where an equivalent replacement would be achieved by meeting the premining uses and any reasonably foreseeable uses of the supply. Therefore, OSM is requiring Pennsylvania to amend 89.145a(b) and 89.145a(f)(i) and (ii), if necessary, to ensure that the phrase ''satisfy the water user's needs and the demands of any reasonably foreseeable uses' is consistent with our discussion concerning the actual use and the reasonably foreseeable use of the supply.

Equivalent Replacement Source and Delivery System: The definition of ''replacement of water supply'' at 30 CFR 701.5 and the corresponding preamble make it clear that ''replacement includes provision of an equivalent delivery system.'' 60 FR at 16726. As previously noted, the preamble discussion related to waiving the replacement of delivery systems not needed for the postmining land use require that the permittee must demonstrate the availability of a water source equivalent to premining quality and quantity. 60 FR at 16727. As a consequence, a replacement supply must be equivalent to the premining supply both in terms of a delivery system and in terms of water quantity of the source.

Pennsylvania's proposed requirements do not specifically address EPAct requirements that a replacement supply must include the provision of an equivalent water delivery system and an equivalent water source in terms of quantity. Under 25 Pa. Code sections 89.145a(f)(1) and 89.145a(f)(4), Pennsylvania required that the replacement supply include a delivery system and proposed criteria for determining the adequacy of permanently restored supplies. While the proposed standards would address supply permanence, reliability, maintenance, and owner control and accessibility, we are concerned that those criteria, alone, could still require supply owners to accept water supply delivery systems that are not equivalent to the premining system to compensate for a replacement source that is not equivalent to the quantity of the premining source. A water delivery system equal to the premining system is crucial to protecting the supply owner from the practice of installing an unconventional delivery system to make up for a source that does not provide an equivalent quantity of water. Examples of such systems would be the placement of in-ground storage tanks to offset well or spring yields that, alone, do not provide an equivalent quantity of water, and the development of an elaborate delivery system from multiple low yield wells.

In conclusion, the Director is approving section 5.1(a)(1) (52 P.S. 1406.5a(a)(1)), which requires that a water supply adversely impacted by an underground mine be replaced ''with a permanent alternate source which adequately serves the premining uses of the water supply or any reasonably foreseeable uses of the water supply,'' to the extent that Pennsylvania both interprets and implements the provisions at section 5.1(a)(1) (52 P.S. 1406.5a(a)(1)), 25 Pa. Code 89.145a(b), and 25 Pa. Code 89.145a(f) consistent with the definition of ''replacement of water supply'' at 30 CFR 701.5 where an equivalent replacement would be achieved by meeting the premining uses and any reasonably foreseeable uses of the supply. Under the Pennsylvania program, an equivalent delivery system or source would be those that adequately serve the premining uses of the water supply or any reasonably foreseeable uses of the water supply. As previously noted above, OSM is requiring Pennsylvania to amend 25 Pa. Code sections 89.145a(b) and 89.145a(f)(3)(i) and (ii), if necessary, to ensure that the phrase ''satisfy the water user's needs and the demands of any reasonably foreseeable uses' is consistent with our discussion concerning the actual use and the reasonably foreseeable use of the supply. Finally, OSM will evaluate implementation of the requirements through the oversight process to determine if the processes used by Pennsylvania to determine current owner's needs and demands of any reasonably foreseeable use are consistent with the definition of ''replacement of water supply'' at 30 CFR 701.5.

With respect to replacement timing, section 5.1(a)(1) (52 P.S. 1406.5a(a)(1)) requires restoration of water supplies but does not place an obligation on the permittee to do so promptly. In addition, section 5.2 (52 P.S. 1406.5b) and Pennsylvania regulation 25 Pa. Code 89.146a, as proposed, serve to condition replacement timing based upon supply type, location and property owner notice to the permittee. Section 720(a)(2) requires the prompt replacement of protected water supplies. The federal rules require prompt replacement of a water supply on ''both a temporary and permanent basis equivalent to premining quantity and quality.'' (30 CFR §§ 701.5 and 817.41(j)). To ensure that all supplies are guaranteed prompt replacement consistent with EPAct, the Director is requiring Pennsylvania to amend this section to require the prompt replacement on both a temporary and permanent basis of all protected water supplies. In requiring the amended language under this section, the Director expects that enforcement actions requiring prompt replacement will at a minimum be handled in conformance with chapter 86, subchapter H (Enforcement & Inspection), which requires citation and abatement of violations within a reasonable time.

Section 5.1(a)(2) (52 P.S. 1406.5a(a)(2)). This section and the

implementing regulations at 25 Pa. Code 89.145a(f)(2) that include identical language, provides that a restored or replaced water supply will be deemed adequate when it differs in quality from the premining water supply, if it meets the Pennsylvania Safe Drinking Water Act (PSDWA) (35 Pa. Stat. Sections 750.1–750.20), or is comparable to the premining water supply when that water supply did not meet these standards.

By letter dated June 21, 1999, we originally notified Pennsylvania that its statute and regulations were less effective than the federal definition of ''replacement of water supply'' in 30 CFR 701.5. That definition requires that a replacement supply be ''equivalent to premining quantity and quality.''

We have reconsidered the position enunciated in our June 21, 1999, letter after reviewing a letter dated March 9, 1999, from then—OSM Director Kathy Karpan to Greg Conrad of the Interstate Mining Compact Commission (IMCC). In that letter, Director Karpan provided guidance for the development and evaluation of State program amendments implementing EPAct.

Our definition of ''replacement of water supply'' in 30 CFR 701.5 requires that the replacement supply be equivalent in quantity and quality to the premining supply. The federal rules do not define what ''equivalent'' means with respect to water quality. However, the March letter to the IMCC stated that, with respect to quality, we would consider the equivalency requirement to be met if the replacement water supply was of a ''quality suitable for all current and reasonably foreseeable uses.'' The letter also notes that our regulations do not require replacement of the source of the premining water supply. Thus, the letter implies that ''equivalent'' does not translate to ''identical.'' Instead, it allows some differences in chemical composition, as long as the replacement supply remains suitable for the uses associated with the premining water supply and any reasonably foreseeable uses.

The preamble to our regulations clearly supports this approach by stating that our regulations do not require restoration of the source of the premining water supply. Instead, according to the preamble, replacement of the water supply may be accomplished through provision of an alternate source such as a public water supply or by pipeline from another location. See 60 FR 16727 and 16733. Since these alternative sources most likely would not be precisely identical to the premining source in terms of water chemistry, the inference is that differences in chemical composition are acceptable as long as the premining and replacement supplies are equivalent in terms of suitability for use.

The Pennsylvania regulations at 25 Pa. Code 89.145a(b), when read in combination with 25 Pa. Code 89.145a(f)(2), require that replacement supplies meet the standards of the PSDWA whenever the quality of the replacement supply differs from that of the premining supply. The only exception occurs when the premining supply does not meet PSDWA standards, in which case the replacement supply must be at least ''comparable to the premining water supply.'' The rules do not specify how comparability will be determined, but 25 Pa. Code 89.145a(a)(1) requires that operators conduct premining water supply surveys prior to mining within 1000 feet of the water supplies. Paragraphs (ii) and (iii) of 25 Pa. Code 89.145a(a)(1), require that the surveys assess the existing and reasonably foreseeable uses of the water supply and the chemical and physical characteristics of the water, including total dissolved solids (or specific conductance), pH, total iron, total manganese, hardness, sulfates, total coliform, acidity, and alkalinity.

The Director finds that Pennsylvania's provisions are no less effective than the federal requirements concerning the quality of replacement water supplies. We are approving Pennsylvania's rules in this regard because we interpret our regulations as meaning that, with respect to water quality, an equivalency determination can be made in terms of suitability for particular uses, rather than requiring that the chemical composition of the replacement supply be identical to that of the premining supply. Pennsylvania's public drinking water systems must meet the requirements of the PSDWA. As Pennsylvania noted in a letter dated June 1, 2000, these requirements are intended to ensure that water delivered by these systems is not only safe, but also palatable and esthetically acceptable. The PSDWA includes maximum contaminant levels for iron, manganese, and sulfates, three parameters that are of major significance in the coalfields.

Of the three types of water supplies protected under EPAct (drinking, domestic, and residential), drinking water requires the highest standards. Since Pennsylvania's regulations require that water supplies that meet PSDWA standards be replaced with supplies of at least that quality, they satisfy the quality aspect of the federal water supply replacement requirements.

Where premining water supplies do not meet PSDWA standards, Pennsylvania's regulation is also no less effective than the federal definition of ''replacement of water supply'' in 30 CFR 701.5 with respect to water quality because the state rule requires replacement with supplies of comparable quality. ''Comparable'' is a synonym for ''equivalent,'' which is the standard in the Federal rule.

Section 5.1(a)(3) (52 P.S. 1406.5a(a)(3)). This section deals with the definition of ''water supply.'' Pennsylvania's definition includes any existing source of water used for domestic, commercial, industrial or recreational purposes or for agricultural purposes or which serves any public building or any noncommercial structure customarily used by the public. Pennsylvania's statutory definition is substantively identical to its regulatory definition found at 25 Pa. Code 89.5. The federal definition of ''drinking, domestic or residential water supply'' at 30 CFR 701.5 includes water received from a well or spring used for ''direct human consumption or household use.'' Clearly, Pennsylvania's definition is not identical to the federal definition. Nonetheless, Pennsylvania's definition includes any existing source used for domestic water, which Pennsylvania has stated would ''include all water supplies covered under the Federal program.'' 28 Pa.B. 2767.

Even though Pennsylvania's definition covers the same water sources, we expressed a concern with the Pennsylvania definition because of preamble language in the Pennsylvania Bulletin that stated that the ''Board does not wish to include language which could be interpreted to include investor-owned water transmission and distribution mains which are rightfully classified as utilities. The Board notes that this definition does not limit in any way the duty of an operator to provide pumping equipment and connecting piping * * *'' (28 Pa.B. 2767). Since the federal definition of ''drinking, domestic or residential water supply'' includes ''any appurtenant delivery system,'' we asked Pennsylvania to clarify what is meant by ''connecting piping'' and ''investor-owned water transmission and distribution mains which are rightfully classified as utilities' in our letter dated June 21, 1999. We were concerned about how the Board's intention not to protect investor-owned water transmission and distribution mains, which are rightfully classified as utilities, would affect the replacement of appurtenant delivery systems protected under EPAct.

PADEP replied that the preamble discussion was made to illustrate the difference between connections from a well or spring to a residence and connections made to a water main that is part of a public water supply system. Connections from a well or spring are permanent affixed appurtenant structures that must be repaired by the mine operator if damaged. PADEP further noted that damage to a water main and that part of the connecting piping that is owned by the water company would be covered under its regulation at 25 Pa. Code 89.142a(g) relating to protection of utilities. In this case, the damage is likely to be repaired by the water company pursuant to an agreement with the mine operator. PADEP concluded that if the property owner owns the connecting piping, it would be regarded as a permanently affixed appurtenant structure, which the mine operator would be required to repair.

Based on the preamble language of the Pennsylvania Bulletin and its explanation addressed to our concerns, we find Pennsylvania's definition of water supply no less effective than the federal regulation. The Director is approving this section.

Section 5.1(b) (52 P.S. 1406.5a(b)). This section indicates an operator is not liable for restoration or replacement of a water supply if a landowner's claim of contamination, diminution or interruption is made more than two years after the supply was affected. In our letter to Pennsylvania dated June 23, 2000, we noted that EPAct provides that an operator is responsible for restoration or replacement of all water supplies used for domestic, drinking or residential use. We noted that the proposed changes to the Pennsylvania program are not as effective as the corresponding federal regulations because some water supplies that would be protected under EPAct may be excluded from protection simply because a user does not file a claim within two years. The federal regulations require a permittee to meet all applicable performance standards during the permit term, including the replacement of water.

In its letter to us dated July 14, 2000, Pennsylvania noted that the two-year time limit for reporting water supply impacts is explicitly stated in BMSLCA. Pennsylvania has observed no cases to date where this limitation has been used as a basis for denying water supply restoration or replacement. Additionally, Pennsylvania noted that since federal SMCRA has no statute of limitations, OSM cannot conclude Pennsylvania's provisions are less effective than the federal regulations. Pennsylvania asserts that when a federal statute contains no limitation provisions, the most appropriate statute of limitations provided by state law should be applied unless there is a relevant federal statute of limitations or the state law would frustrate or interfere with the implementation of national policies. Pennsylvania cited a court case (*Sierra Club* v. *Chevron U.S.A., Inc.,* 834 F.2d 1517, 1521 (9th Cir. 1987)) that it believes to be relevant to its position.

Pennsylvania further states that since it notifies property owners above underground mines of their rights and the mine operator's obligations should underground mining adversely affect their water supplies, that people are unlikely to make do without water for two years without making a claim. Pennsylvania believes that this approach serves to ensure that water supply claims will be filed before the statute of limitations expires, which will effectively implement the national policy of requiring underground mine operators to address these impacts.

Finally, Pennsylvania noted that this section of BMSLCA is not contrary to 30 CFR 700.11(d) because that section of the federal regulations is purely discretionary and not required to be part of a state program. Section 700.11(d) authorizes, but does not require, regulatory authorities to terminate jurisdiction over the reclaimed site of a completed surface coal mining and reclamation operation. Federal law defines the term ''surface coal mining and reclamation operations'' as surface coal mining operations and all activities necessary or incidental to the reclamation of surface coal mining operations. The term ''surface coal mining operations'' is interpreted by OSM to not include subsidence, etc. resulting from underground coal mining. Consequently, water supplies affected by underground mining as well as restoration or replacement of such water supplies are not activities subject to 700.11(d).

The Director is not approving this portion of the BMSLCA for several reasons. First, even though there have been no cases reported to date where this provision has been used to deny restoration or replacement of affected supplies, it does not mean that it will not happen. If this provision were ever used to deny coverage that would otherwise have been provided under federal regulations, it would be less effective than the federal requirements.

Second, we disagree that the Ninth Circuit case cited by Pennsylvania is applicable. The proposition held by the court of appeals and cited by Pennsylvania states that when a federal statute contains no limitations provisions, an applicable state statute of limitations should be applied, unless there is an analogous federal statute of limitations, or the state law would frustrate or interfere with national policies. The Ninth Circuit case is the general rule applicable to litigation involving private parties. However, this general rule and its exceptions do not control government actions brought to vindicate public interests. See, Dole v. Local 427, International Union of Electrical, Radio and Machine Workers, 894 F.2d 607 (3d Cir. 1990). The general rule that applies to government actions is that ''no statute of limitations will be applied in civil actions brought by the Government, unless Congress explicitly imposes such time limitations.'' Dole, 894 F.2d at 610. The court of appeals in Dole held that no statute of limitations applies to the government so long as a public purpose is served by its action. While section 5.1(b) (52 P.S. 1406.5a(b)) of BMSLCA will benefit a private individual, this is no different than the situation in Dole, where the Department of Labor sued to enforce individual and public rights. The fact that a public suit may benefit a private individual does not change the application of the general rule for government actions. Under the provisions of the BMSCLA, it will be Pennsylvania that will enforce the requirement that the operator replace an affected water supply. The requirement to replace a water supply not only serves a private purpose, it also serves a public purpose as well. The replacement requirement not only protects the current owner but also his or her successor and the community by preserving property values. 60 FR at 16727.

Further, a time limit on water claims is adverse to the general scheme of SMCRA. For example, this section would limit Pennsylvania's ability to take enforcement actions and would interfere with the administrative methods established by sections 517 and 521 of SMCRA since it could be difficult to determine when the supply was initially affected. Since every state could have a different time period, this section is contrary to the public policy of section 102(a) of SMCRA that established a nationwide program and with section 101(g) of SMCRA. It could also preclude some citizen suits because in some situations a citizen wouldn't know that Pennsylvania wasn't taking action until the two years elapsed. Additionally, if a claim for water damage were not made within two years from the date the supply was affected,

Pennsylvania would not consider it a violation. Since it is not a violation, this would prevent Pennsylvania from holding operators responsible for damage to a water supply.

We disagree with Pennsylvania that this time limitation is no less effective than the federal rules. It is contrary to section 505(b) of SMCRA, which prohibits any state program from having state laws or regulations that are inconsistent with SMCRA. The statute of limitations would seem to insure that at some point a water supply would not be restored or replaced. Failure to restore or replace a water supply is in direct contrast with the purposes of EPAct and the federal regulations that require, without a time limit, the restoration or replacement of these supplies. Finally, since our decision is based on the above, we feel it is unnecessary to address Pennsylvania's interpretation of the federal regulations describing termination of jurisdiction. As a result, the Director is not approving section 5.1(b) (52 P.S. 1406.5a(b)) of the BMSLCA.

Section 5.2(a)(1) (52 P.S. 1406.5b(a)(1). This section requires a landowner to contact the operator with a claim of water loss or contamination. The section also requires the operator to investigate such claims with reasonable diligence. In our letter to Pennsylvania of June 21, 1999, we noted that this section appeared to be less effective than the federal regulations because the federal rules and statute do not require the landowner or water user to first contact the operator. We asked Pennsylvania to explain how this requirement affects a landowner's or water user's rights or PADEP's responsibilities to initiate action under citizen complaint procedures.

In its response of June 1, 2000, PADEP indicated that requiring the landowner to contact the operator has not been a problem during the first five years of the program's implementation. Pennsylvania believes that requiring the landowner to contact the operator saves time by allowing the owners to describe their problem to the operator and to schedule access to their property for the operator.

The proposal by Pennsylvania to require landowners to notify operators with a claim of water loss was carefully considered by the Director relative to the requirements for water supply replacement (30 CFR 817.41(j)) and the requirements for addressing complaints by citizens (30 CFR part 842). It is important to note that under both the federal and the proposed Pennsylvania requirements, underground mining that results in the contamination, diminution, or interruption of a water supply is not prohibited. Once a water supply is affected, the federal requirements require prompt replacement while Pennsylvania's proposed requirements allow operators to delay permanent replacement for up to at least three years. Specifically at issue under section 5.2(a)(1) (52 P.S. 1406.5b(a)(1)) of the Pennsylvania statute is whether the requirement for landowners to notify operators with a claim of water loss is no less effective than federal requirements.

EPAct and 30 CFR 817.41(j) are silent on how the operator is notified of the water loss. Under section 720 of SMCRA, permittees are responsible for prompt replacement regardless of whether they are contacted by property owners or by the regulatory authority in cases where the property owner failed to do so. Under section 5.2(a)(1) (52 P.S. 1406.5b(a)(1)) of the BMSLCA, Pennsylvania has elected to establish a water loss notification procedure that requires the property owner to contact the operator. The section also requires that the operator shall, with reasonable diligence, investigate the loss. The proposed changes to the Pennsylvania program are silent on any procedures that will be followed in the event that landowners choose to notify the Department rather than the operator. However, under section 5.2(b)(2) (52 P.S. 1406.5b(b)(2)) and 25 Pa. Code 89.146a(b), Pennsylvania conditioned its ability to require temporary water within 24 hours of issuance of an order to those cases where the landowner falls within the rebuttable presumption area and notified the operator.

The Director finds section 5.2(a)(1) (52 P.S. 1406.5b(a)(1)) of the BMSLCA is not inconsistent with the requirements of SMCRA and the federal regulations and is approving it. The approval is granted because even though section 5.2(b)(2) (52 P.S. 1406.5b(b)(2)) and 25 Pa. Code 89.146a(b) act to limit property owner access to the 24-hour temporary supply standard under section 5.2(a)(2) (52 P.S. 1406.5b(a)(2)), the Director's required amendment of section 5.1(a)(1) (52 P.S. 1406.5a(a)(1)) of the BMSLCA will insure the prompt replacement of all adversely affected water supplies (see required amendment discussion under section 5.1(a)(1) (52 P.S. 1406.5a(a)(1)). As a consequence, property owners that do not directly notify the operator may not receive a temporary supply within 24 hours pursuant to section 5.2(a)(2) (52 P.S. 1406.5b(a)(2)). However, they will be guaranteed a prompt replacement consistent with EPAct because of the amendment required by the Director at section 5.1(a)(1) (52 P.S. 1406.5a(a)(1)).

Section 5.2(a)(2) (52 P.S. 1406.5b(a)(2)). This section requires operators to provide a temporary water supply to landowners with water supply problems within the rebuttable presumption area within 24 hours. However, this section does not address temporary water supply requirements for those landowners whose water supplies are outside the presumption area. The federal rules require all protected water supplies to be promptly replaced on both a temporary and permanent basis, regardless of location.

Pennsylvania's response to OSM's issue letter of June 21, 1999, stated (see finding for 25 Pa. Code 89.145a(e)(1)) that section 5.2 of the BMSLCA provided for temporary water replacement if the affected water supply is outside the rebuttable presumption area. Pursuant to 5.2, the operator's responsibility does not begin until after the PADEP issues an order. This is contrary to SMCRA and the federal regulations that indicate there is an obligation on the permittee to replace water on a temporary and permanent basis before there is enforcement by the regulatory authority (see 720(a)(2) of SMCRA and 30 CFR 817.41(j)). As a condition of a permit, a permittee must comply with all the conditions of the permit, all applicable performance standards and the requirements of the regulatory program (see 30 CFR 773.17(c)). The requirement to promptly replace protected water supplies is a performance standard. Once the operator is notified of the water problem (in Pennsylvania, by the landowner or the water user), the operator is obligated to replace the water. This occurs before there is enforcement by the regulatory authority. Enforcement by the regulatory authority commences when there is a violation of the statute, regulations, and/or applicable program. Accordingly, the Director is approving section 5.2(a)(2) (52 P.S. 1406.5b(a)(2)) for those water supplies within the rebuttable presumption area that qualify for the 24-hour temporary supply replacement standard because this portion of the statute is consistent with the federal regulations at 30 CFR 701.5 and 817.41(j) that require prompt replacement of water supplies and with 30 CFR 773.17(c). However, because there is no requirement in BMSLCA to provide temporary water in a prompt manner for those water supplies that lie outside the rebuttable presumption area, or otherwise fail to qualify for the 24-hour temporary supply replacement standard, the Director is requiring Pennsylvania to amend section 5.1(a)(1)

(52 P.S. 1406.5a(a)(1)) requiring the prompt replacement of water supplies, including temporary water, to all landowners whose water supply has been impacted by underground mining.

Section 5.2(a)(3) (52 P.S. 1406.5b(a)(3)). This section provides that if a temporary water supply is not provided within 24 hours, PADEP, after notice by the landowner or water user, shall order the operator to provide temporary water within 24 hours. The operator shall notify the Department of any claim of contamination, diminution or interruption made to it by a landowner or water user and its disposition. This section only applies to those supplies falling within the rebuttable presumption zone as required by section 5.2(c) (52 P.S. 1406.5b(c)).

The Director is approving this section because it provides the Department with specific authority to issue orders to require temporary water within 24 hours for those supplies that meet the requirements of section 5.2(c) (52 P.S. 1406.5b(c)), and where the operator has refused to provide the supply. This is consistent with both 30 CFR 817.41(j), which requires prompt replacement of water supplies, and the enforcement procedures of Part 843. Once an operator refuses to replace a protected water supply, a violation has occurred and the regulatory authority can then enforce this replacement requirement with an order. For those supplies that meet section 5.2(c) (52 P.S. 1406.5b(c)), this enforcement authority will assist the Department in securing prompt replacement. It should be noted that the Director is requiring Pennsylvania to amend section 5.1(a)(1) (52 P.S. 1406.5a(a)(1)) to require prompt replacement of all supplies covered by EPAct. In requiring the amended language under section 5.1(a)(1) (52 P.S. 1406.5a(a)(1)), the Director expects that those supplies that do not meet the conditions of section 5.2(a)(2) and (a)(3) (52 P.S. 1406.5b(a)(2) and (3)) will be addressed by the Department consistent with chapter 86, subchapter H (Enforcement & Inspection), which requires citation, and abatement, of violations within a reasonable time.

Section 5.2(b)(1) (52 P.S. 1406.5b(b)(1)). This section provides that a landowner may notify the Department if an alternate source has not been provided or if an operator ceases to provide an alternate source and requests an investigation be conducted. While there is no direct federal counterpart to this section, the Director is approving it because it is not inconsistent with the citizen complaint procedures in the approved Pennsylvania program (see 49 FR 10253–58) or 30 CFR 842.12, which allow citizens to bring their complaints to the regulatory authority.

Section 5.2(b)(2) (52 P.S. 1406.5b(b)(2)). This section provides that within 10 days of notification the Department will investigate claims and within 45 days make a determination if the operator affected the water supply. The Department can then issue orders for replacement. This section also allows three years to pass before orders requiring a permanent water supply are issued. In our letter to Pennsylvania dated June 21, 1999, we indicated that this section appeared to be less effective than the federal rules because it does not require that water supplies be promptly replaced and that it would allow three years to elapse before the Department issues an order to provide a permanent alternate source of water. We further noted that three years is inconsistent with federal SMCRA 720(a)(2) requiring prompt replacement of drinking, domestic or residential water supplies.

In their letter to us dated June 1, 2000, Pennsylvania indicated that the time periods of 5.2(b)(2) (52 P.S. 1406.5b(b)(2)) relate to PADEP actions. Pennsylvania noted that this section only pertains to situations where mine operators are apparently failing to fulfill their obligations. In these cases, PADEP may be required to establish proof of causation and operator liability before taking appropriate action. Pennsylvania believes this section of BMSLCA is more stringent because it requires the regulatory authority to act within specified time periods while the federal regulations set no deadlines for follow up action by the regulatory authority. With regard to the three-year issue, Pennsylvania responded that the three-year period is consistent with scientific literature that indicates if a water supply is going to recover it will usually do so within three years of impact. Finally, Pennsylvania noted that, in some cases, an attempt at permanent restoration in a shorter time may not be prudent because of the potential impacts of additional mining that will take place in the future.

As we stated in the preamble to the federal EPAct rules, ''existing citizen complaint procedures are adequate and appropriate to address surface owner complaints of subsidence damage.'' (60 FR at 16735). While this statement was made in the context of damage to structures, it applies equally to water loss complaints. The proposal by Pennsylvania to provide a water loss claims investigation procedure for affected property owners was carefully considered by the Director relative to the existing requirements for addressing complaints by citizens under 30 CFR Part 842. Currently, the approved Pennsylvania program regarding citizen complaint investigations and enforcement provides that if an inspection is made, the Department will notify the citizen within 10 days of completion of the inspection of the results. If no inspection is made, the Department will notify the citizen within 15 days of receipt of the complaint. Pennsylvania's approved citizen complaint rules are consistent with 30 CFR 842.12 and allow latitude in determining what constitutes the point at which an inspection is complete to allow for the collection of necessary data (see 49 FR 10253–58). The Director recognizes that, in certain cases, citizen complaint inspection duties could be completed prior to the 45 days specified in section 5.2(b)(2) (52 P.S. 1406.5b(b)(2)). Under existing citizen complaint rules, once an inspection is completed, Pennsylvania has 10 days to describe its enforcement action or lack thereof. However, under the proposed provision, the completion of inspection duties may occur in a short time, e.g. two days, but Pennsylvania would have longer than 10 days to notify the citizen of its inspection results, e.g. 43 days. This is inconsistent with Pennsylvania's existing rules and the federal rules regarding time requirements for responding to citizen complaints. To be consistent with the federal rules, Pennsylvania must notify the citizen of its decision within 10 days of completing all the inspection duties. Therefore, the Director is approving this portion of section 5.2(b)(2) (52 P.S. 1406.5b(b)(2)) to the extent that it is consistent with, or more timely than, its citizen complaint procedures and is requiring Pennsylvania to amend its program to the extent the time frames are longer than its citizen complaint procedures.

The Director is not approving the portion of this provision that states ''* * * where the contamination, diminution or interruption does not abate within three years of the date on which the supply was adversely affected.'' As noted in the preamble to the federal rules, a permittee should connect the user to a satisfactory permanent water supply within two years of notification (60 FR at 16727). Pennsylvania makes reference to technical guidance that supports its standard that a permanent water supply should be replaced within three years. However, Pennsylvania failed to submit such technical information and OSM

knows of no technical guidance to support Pennsylvania's assertion. Section 5.2(b)(2) (52 P.S. 1406.5b(b)(2)) allows three years to elapse without issuance of an order requiring permanent restoration or replacement. The process of ordering a permanent restoration or replacement does not start until the three years expired. This means that permanent restoration or replacement could go well beyond three years, which is clearly not envisioned by OSM in drafting the federal rules. Pennsylvania's statute delays permanent replacement by up to 50% over the federal guidelines. Allowing an operator up to three years to replace a water supply is not a ''prompt'' replacement, thus it is less stringent than 720(a)(2) of SMCRA.

Section 5.2(c) (52 P.S. 1406.5b(c)). This section provides that an underground mine operator is presumed to be responsible for contamination, diminution or interruption of water supplies within a rebuttable presumption area. The operator may successfully rebut the presumption if the landowner denied the operator access to the property to conduct a premining survey of the water supply.

There is no federal regulation that prohibits the state from enacting a rebuttable presumption for water. In fact, by finding that operators are presumed responsible for replacement of water supplies within the presumption area, this portion of the statute will assist in insuring that operators are promptly informed of their obligation to replace affected supplies and will assure they promptly provide emergency and temporary water. Thus, the Director finds that this portion of the program is in accordance with § 720(a)(2) of SMCRA, which requires the prompt replacement of a protected water supply.

Section 5.2(d) (52 P.S. 1406.5b(d)). The full text of the language of this section is as follows.

Unless the presumption contained in subsection (c) applies, a landowner, the department or any affected user asserting contamination, diminution or interruption shall have the burden to affirmatively prove that underground mining activity caused the contamination, diminution or interruption. Wherever a mine operator, upon request, has been denied access to conduct a premining survey and the mine operator thereafter served notice upon the landowner by certified mail or personal service, which notice identified the rights established by sections 5.1 and 5.3 and this section, was denied access and the landowner failed to provide or authorize access within ten days after receipt thereof, then such affirmative proof shall include premining baseline data, provided by the landowner or the department, relative to the affected water supply.

The amendment provides that the Department, or a landowner outside the rebuttable presumption area, has the burden of proof in claiming that a water supply has been contaminated, interrupted or diminished. This is consistent with enforcement actions where the regulatory authority has the initial burden, so the Director is approving this language. However, the last sentence of this portion of the amendment requires that the burden of proof for landowners who deny access to an operator to conduct a premining survey, must include premining baseline data as supplied by the landowner or the Department. The portion of the amendment requiring premining baseline data as a condition of establishing burden of proof makes it less effective than the federal regulations at 30 CFR 817.41(j). This section of the federal regulations requires the baseline hydrologic information required in 30 CFR 780.21 and 784.14 to be used to determine the impact of mining activities upon the water supply. Such information is to be supplied by the applicant. The proposed amendment requires the Department, or landowner, to provide data that is to be supplied by the operator in the permit application. Therefore, the following portion of the amendment is less effective than the federal regulations: ''Wherever a mine operator, upon request, has been denied access to conduct a premining survey and the mine operator thereafter served notice upon the landowner by certified mail or personal service, which notice identified the rights established by sections 5.1 and 5.3 and this section, was denied access and the landowner failed to provide or authorize access within 10 days after receipt thereof, then such affirmative proof shall include premining baseline data, provided by the landowner or the Department, relative to the affected water supply.'' The Director is not approving this language.

Section 5.2(e)(1) (52 P.S. 1406.5b(e)(1)). This section provides that a mine operator can be relieved of liability for affecting a public or private water supply when the contamination, diminution or interruption of the supply existed prior to the mining activity. There is no direct federal counterpart to this provision. However, the federal definition of ''replacement of water supply'' at 30 CFR 701.5, requires the replacement of protected water supplies whenever the supplies were affected by coal mining operations. If all the contamination, diminution or interruption existed prior to the start of coal mining operations, then the supply was not affected by the coal mining operations. If additional contamination, diminution or interruption occurred after the start of the coal mining operations, then the operator would become liable for the damage caused to the water supply by the coal mining operations. Thus, the Director finds that this subsection is consistent with 30 CFR 701.5 and is approving this portion of Pennsylvania's amendment.

Section 5.2(e)(2) (52 P.S. 1406.5b(e)(2)). This section provides that a mine operator can be relieved of liability for affecting a public or private water supply when the contamination, diminution or interruption occurred more than three years after mining activity occurred. In our letter of June 23, 2000, we indicated to Pennsylvania that the statute of limitations proposed by this section will allow water supplies that otherwise will be protected under federal regulations to continue to be contaminated, diminished or interrupted because mining occurred more than three years prior to the onset of water supply problems. PADEP responded in their letter to OSM dated July 14, 2000, that the same reasoning applied to the statute of limitation issue of section 5.1(b) of BMSLCA was applicable for this section. In addition, Pennsylvania indicated that based on the definition of the term ''underground mining activities,'' the obligation to replace an affected water supply extends from the time a water supply is first undermined until three years after the mine has closed and reclamation has been completed. In essence, the period of liability is equivalent to the liability period under the federal regulations which ends at the time that jurisdiction would be terminated under the federal program. Pennsylvania contends this period should be sufficient to capture virtually all water supply impacts that occur as a result of the underground mining activity.

The Director is not approving this portion of the BMSLCA for several reasons. First, even though there have been no cases reported to date where this provision has been used to deny restoration or replacement of affected supplies, it does not mean that it will not happen. If this provision were ever used to deny coverage that would otherwise have been provided under federal regulations, it would be less effective than the federal requirements. This provision virtually assures that at some point in time, there will be a water supply that would not be restored or replaced because the landowner did not

report the contamination, diminution or interruption within the noted time frame.

Second, for the reasons discussed in our findings for section 5.1(b) (52 P.S. 1406.5a(b)), which are incorporated herein, the Director believes this section to be less effective. Additionally, Pennsylvania's three-year limit is not a normal statute of limitations because it is not tied to an injury. It ignores the legislative history of analogous § 516 of SMCRA, which acknowledges that ''[s]ubsidence occurs * * * on a random basis, at least up to 60 years after mining.'' H.R. Rep. No. 218, 95th Cong., 1st Sess. 126 (1977). Pennsylvania's argument that the net effect of 5.2(e)(2) is the same as the federal termination of jurisdiction rule is erroneous. According to Pennsylvania, it is eliminating an operator's liability three years after the mine has closed and reclamation is completed. However, both the termination of jurisdiction rule (30 CFR 700.11(d)) and the EPAct regulations (30 CFR §§ 701.5 and 817.41(j)) recognize that a regulatory authority's jurisdiction may not end, if at all, until all the performance standards are met. The termination of jurisdiction rule, while consistent with the EPAct regulations, is not applicable since subsidence can occur on a random basis at any time. Thus, an operator's liability extends indefinitely into the future. 60 FR at 16736. With section 5.2(e)(2) (1406.5b(e)(2)), once the three years have passed, there is no recourse for the landowner and no way to force an operator to restore or replace a water supply even though a water supply may be affected long after the three years.

Section 5.2(e)(3) (52 P.S. 1406.5b(e)(3)). This section allows a mine operator to be relieved of liability for affecting a public or private water supply when the contamination, diminution or interruption occurred as the result of some cause other than mining. A commenter noted this section could be construed as allowing an operator who is a contributing cause of the water loss, to escape responsibility for a loss for which the operator shares responsibility with another party. Based on this comment, we asked Pennsylvania in our letter of June 21, 1999, to provide a state Attorney General's opinion that the law assures that wherever the operator is partially or entirely responsible for the water loss, state law imposes liability.

Pennsylvania supplied an opinion from the Bureau of Regulatory Counsel in its letter to us dated June 1, 2000. The opinion indicates that in accordance with the rules of statutory construction, the intent of the Pennsylvania General Assembly was to provide a remedy for water supplies affected by underground mining. This section is construed to relieve an operator of responsibility to restore or replace a water supply only where the contamination, diminution or interruption occurred solely as a result of some cause other than mining. Where mining is partly the cause of the contamination, diminution, or interruption the mine operator will not be relieved of the statutory obligation to restore or replace the affected water supply. The Rules of Practice before the Pennsylvania Environmental Hearing Board also support this intention.

There is no direct federal counterpart to this provision. However, the federal definition of ''replacement of water supply'' at 30 CFR 701.5, requires the replacement, etc. of protected water supplies whenever the supplies were affected by coal mining operations. Therefore, this section, as explained by the Attorney General's opinion, is consistent with the federal definition. The Director finds Pennsylvania's explanation sufficiently responds to the commenter's concerns, and is approving this portion of the amendment.

Section 5.2(f) (52 P.S. 1406.5b(f)). This section requires operators who obtain water samples in a premining or postmining survey to use a certified laboratory to analyze such samples. The operator must submit copies of the results of such analysis to the Department and to the landowner within 30 days of their receipt. Nothing in this section will prohibit a landowner or water user from using an independent certified laboratory to sample and analyze the water supply. This provision is no less effective than 30 CFR 784.20(a)(3), which requires a permit applicant to pay for a premining survey of the quantity and quality of all protected water supplies and to provide copies of such to the property owner and state regulatory authority. The Director is approving this portion of the amendment.

Section 5.2(g) (52 P.S. 1406.5b(g)). This section indicates that if an affected water supply is not restored or replaced within three years an operator may be relieved of responsibility for replacement or restoration of a water supply by (1) purchase of the property, or (2) making a one-time payment equal to the difference between the property's fair market value before the time the water supply was affected and the time the payment was made. In our letter to Pennsylvania dated June 21, 1999, we indicated that this section appears to be less effective than the federal regulations because EPAct has no provisions for relieving an operator of responsibility for water restoration or replacement. EPAct also does not provide for compensation in lieu of replacement or restoration.

In its response of June 1, 2000, Pennsylvania wrote that it may be cost prohibitive to restore or replace a water supply. This section provides the landowner the option of agreeing to compensation to satisfy the mine operator's obligation to restore or replace the affected water supply. Pennsylvania believes that by affording landowners and water users monetary compensation in situations where it is not reasonably possible to afford them an equitable remedy, its program is consistent with federal law.

The Director is not approving this portion of the BMSLCA because it is less stringent than section 720 of SMCRA, which requires the prompt replacement of a protected water supply. The preamble to the federal regulations at 30 CFR 817.41(j) implementing 720 of SMCRA states:

> A commenter recommended that compensation be available as an option for those limited circumstances where an impacted supply can't be restored. The commenter went on to note that Congress, in enacting the Energy Policy Act, clearly noted that these provisions were not to prohibit, or interrupt underground coal mining operations. Without the compensation option, the commenter asserted that operations would be forced to cease operating if they couldn't replace the water supplies. OSM does not agree. The terms of the Energy Policy Act *unequivocally require replacement.* Further, OSM does not anticipate that underground mining operations will be unable to comply with this *statutory mandate.* For example, if the permittee is unable to restore a spring or aquifer, the permittee should still be able to provide water from an alternative source, such as a public water supply, or by pipeline from another location. 60 FR at 16733 (emphasis added).

Clearly both SMCRA and the federal regulations require restoration, or replacement, and thus compensation in lieu of restoration or replacement is not an option.

Section 5.2(h) (52 P.S. 1406.5b(h)). This section allows a landowner to submit a written request asking PADEP to review an operator's finding that a water supply cannot reasonably be restored or that a permanent alternate source cannot reasonably be provided. In response to the request, the Department will issue an advisory opinion on the validity of the claim within 60 days. In our letter to Pennsylvania dated June 21, 1999, we indicated that this section appears to be less effective than the federal regulations because it allows a finding

that a permanent alternate source cannot be provided. EPAct requires a source to be provided without exception.

In its response of June 1, 2000, Pennsylvania reiterated its argument in response to our comments on section 5.2(g) of BMSLCA. Pennsylvania notes that providing an opinion for landowners on whether they should proceed to elect a damage remedy, has done nothing more than provide a means to assure that a landowner does not accept compensation in lieu of ''equitable-type'' replacement relief unless it is true that a replacement water supply cannot be reasonably provided by the mine operator. Pennsylvania also indicated that BMSLCA addresses a broader array of water supplies than the federal program. The option to compensate represents a reasonable policy choice that provides a flexible approach to the water supply replacement obligation of underground operators. Finally, Pennsylvania noted that § 720 of federal SMCRA provides that the water supply replacement obligation shall not be construed to prohibit or interrupt underground mining. It is entirely possible underground mining conducted under the federal program may result in impacts to water supplies that cannot reasonably be replaced. In these situations the regulatory authority would be faced with accepting some alternative type of settlement that is reasonable and equitable to the mine operator and landowner.

As noted in the Director's decision on section 5.2(g) (52 P.S. 1406.5(b)(g)) of the BMSLCA, SMCRA and the federal regulations require the replacement or restoration of water supplies without exception. The Director is not approving this portion of the BMSLCA because it is connected with section 5.2(g) (52 P.S. 1406.5(b)(g)) that allows compensation in lieu of replacement or restoration. Section 5.2(h) (52 P.S. 1406.5(b)(h)) is not self-sustaining and is unenforceable without section 5.2(g) (52 P.S. 1406.5(b)(g)). Therefore, it is inconsistent with the requirements of SMCRA and the federal regulations.

Section 5.2(i) (52 P.S. 1406.5b(i)). This section defines the term ''permanent alternate source'' to include any well, spring, municipal water supply system or other supply approved by the Department which is adequate in quantity, quality and of reasonable cost to serve the premining uses of the affected water supply. In our letter to Pennsylvania dated June 21, 1999, we indicated that this section appears to be less effective than the federal rules because it bases the adequacy of a permanent alternate source of water on premining uses of the water supply rather than the premining quality and quantity and that the reasonable cost provision of this section makes it appear to be less effective than federal regulations which require replacement without regard to cost.

In its response to us of June 1, 2000, Pennsylvania noted that our comments were an incorrect characterization of the statutory provision. The requirement that a replacement water supply must be of reasonable cost is intended to protect landowners and water users from being forced to accept water supplies that are unreasonably expensive to operate or maintain. Replacement water supplies with high costs to operate or maintain would only be acceptable if the mine operator provided for payment of the high costs.

The Director is not approving the portion of this provision that requires permanent alternate replacement sources to be of reasonable cost. The definition of the term ''replacement of water supply'' as found in the federal regulations at 30 CFR 701.5 indicates that replacement includes payment of operation and maintenance costs in excess of customary and reasonable delivery costs of premining water supplies. Pennsylvania's argument that the requirement that a replacement water supply must be of reasonable cost is intended to protect landowners is not tenable because the federal rules require operators to assume the operation and maintenance costs of the replacement delivery systems if they are ''beyond those that are customary and reasonable for the premining supply.'' 60 FR at 16726. Therefore, the Director is not approving the phrase ''and of reasonable cost'' in this section. However, the Director is approving the remaining portion of this section. For a more complete discussion of the Director's decision regarding quality and quantity standards for replacement or restoration of water supplies, please see the Director's findings for sections 5.1(a)(1) and (a)(2) (52 P.S. 1406.5a(a)(1) and (a)(2)), which are incorporated into this finding.

Section 5.2(j) (52 P.S. 1406.5b(j)). This section requires an operator to describe how water supplies will be replaced. This section also provides that the Department cannot require a mine operator to provide a replacement water supply prior to mining as a condition of securing a permit to conduct underground mining. There is no direct federal counterpart to this section. The Director finds that this portion of the amendment is in accordance with that portion of 720(a)(2) of SMCRA which states that ''[n]othing in this section shall be construed to prohibit or interrupt underground coal mining operations.'' Therefore, the Director approves this portion of the amendment.

Section 5.2(k) (52 P.S. 1406.5b(k)). This section allows any landowner, water user, or mine operator, aggrieved by an order or determination of the department issued under this section, the right to appeal the action to the Environmental Hearing Board within 30 days of receipt of the order. This section allows an appeal right that is found within numerous other sections of Pennsylvania's approved program and therefore is no less effective than the federal regulations at 30 CFR 843.16 (implementing 30 CFR 840.13). The Director approves this section.

Section 5.3(a) (52 P.S. 1406.5c(a)). This section provides that the operator and the landowner may enter into an agreement that establishes the manner and means by which an affected supply will be restored or an alternative supply will be provided or providing compensation for the affected water supply. It also lists what conditions must first be met before the operator will be released from liability. Finally, it prohibits double compensation to the landowner. In our letter of June 21, 1999, to Pennsylvania, we noted that EPAct does not allow compensation for contamination, loss or diminution of water supplies in lieu of replacement. In its response of June 1, 2000, Pennsylvania noted these concerns were the same that we noted in sections 5.2(g) and 5.2(g)(1). Pennsylvania's response for this section is the same as in those sections. In addition, Pennsylvania noted that the decision in *National Mining Assoc.* v. *U.S. Department of the Interior,* 172 F.3d 906 (D.C. Cir. 1999), recognizes the legitimacy of voluntary agreements for damages under the federal regulatory program.

The Director is approving this provision to the extent that the agreement to replace a water supply or provide an alternative water supply meets the requirements established in the federal definition of ''Replacement of Water Supply'' found at 30 CFR 701.5. The Director is not approving agreements that provide for replacement of an alternate supply of water to the extent that water supply will not meet the requirements of the federal definition.

The Director is also not approving this provision to the extent that it allows compensation in lieu of restoration or replacement of affected water supplies. The federal rules do not allow operators and landowners to enter into voluntary

agreements for compensation in lieu of restoration or replacement of affected water supplies. As previously noted, in the Director's Finding for section 5.2(g), which is incorporated herein, SMCRA and the federal rules require restoration or replacement. The terms of EPAct *unequivocally require replacement.* 60 FR at 16733 (emphasis added). Therefore, this is less effective than SMCRA and the federal rules. The Director would note that Pennsylvania's reliance on the *National Mining Association* decision is misplaced. The voluntary agreements that are discussed in the court decision are compensation agreements for subsidence damages to any noncommercial building or occupied residential dwelling. The opinion does not extend or recognize compensation agreements for damages to water supplies.

Section 5.3(b) (52 P.S. 1406.5c(b)). This section provides that any agreement made under section 5.3(a) (52 P.S. 1406.5c(a)) must be included in every deed for conveyance of the property covered by the agreement. The Director is not approving this provision to the extent that section 5.3(a) (52 P.S. 1406.5c(a)) has not been approved and hence there will be no agreements providing for compensation in lieu of water supply replacement or restoration. Therefore, section 5.3(b) (52 P.S. 1406.5c(b)) is inconsistent with the requirements of SMCRA and the federal regulations to the extent that section 5.3(a) (52 P.S. 1406.5c(a)) is less effective.

Section 5.3(c) (52 P.S. 1406.5c(c)). This section allows a landowner or water user who claims contamination, diminution or interruption of a water supply to seek any other remedy that may be provided at law or in equity. The section further indicates that in any proceedings in pursuit of remedies other than provided in this Act, the provisions of this act shall not apply and the party or parties against whom liability is sought to be imposed may assert in defense any rights or waivers arising from provisions contained in deeds, leases or agreements pertaining to mining rights or coal ownership on the property in question.

In our letter of June 21, 1999, we asked Pennsylvania to clarify the intent of this section. In particular we wanted to know what was meant by other remedies as used in this section, and if this section allows an operator to assert rights that afford lesser protection than is provided by EPAct.

In its response of June 1, 2000, Pennsylvania indicated that the General Assembly appeared to want to preserve any remedy a landowner or water user had under existing law covering adverse effects to a water supply caused by underground mining. This section gives the landowner or water user the option of pursuing the remedies provided by BMSLCA for water loss, contamination or diminution or pursuing the remedies available at common law or pursuing the remedies available under federal law. Pennsylvania concluded by noting that a mine operator could only assert rights that afford lesser protection than is provided by EPAct if the water user elects to pursue a common law remedy and the mine operator possesses such rights.

This section is inconsistent with § 720(a)(2) of SMCRA and the federal rules to the extent that any state law negates the requirements of, or provides less protection than, EPAct. In a challenge to the federal rules (30 CFR § 817.41(j), 817.121(c)(2) and 701.5), industry plaintiffs asserted that these regulations interfered with state law water rights and that the Energy Policy Act did not preempt state law, thereby allowing a landowner's waiver of water replacement. *National Mining Association* v. *Babbitt,* Civil Action No. 95–0938 (D.D.C. May 29, 1998). The district court agreed with OSM that the federal rules do not interfere with state law water rights. *See also,* 60 FR 16727, 16733 (March 31, 1995). The court went on to hold that the Energy Policy Act ''created federal substantive rights that may extend beyond the protections afforded by inconsistent or less protective state laws . . . . Congress did not include limitations in § 720 and instead made *the duty to replace or repair a water supply absolute and without exception.'' Id.* at 12 (emphasis added). For example, any rights or waivers found in deeds or leases or agreements that waive or reduce the protections of EPAct are less stringent and not approved. However, any Pennsylvania law that exceeds the requirements of EPAct is in accordance with SMCRA. Also, matters involving property rights disputes are beyond the scope of SMCRA (see § 507(b)(9) and 510(b)(6)(C) of SMCRA). Accordingly, the Director is not approving this section to the extent any state law negates or provides less protection than EPAct.

Section 5.4(a) (52 P.S. 1406.5d(a)). This section requires the operator to either repair or compensate owners for damage to certain structures caused by underground mining operations. Compensation is to be made to the owner of structures overlying, or in the proximity of, the mine for the reasonable cost of its repair or the reasonable cost of its replacement where the damage is irreparable. Section 720(a)(1) of SMCRA provides for repair of material damage, which ''shall include rehabilitation, restoration, or replacement of the damaged'' structure or dwelling or compensation in the full amount of the decrease in value resulting from the subsidence. Pennsylvania's statute, as implemented by its regulation at 25 Pa. Code 89.142a(f)(1), states that the operator shall fully rehabilitate, restore, replace or compensate the owner for material damage. The two standards for repair are substantively identical because they both require the operator to rehabilitate, restore, or replace the damaged structure. However, Pennsylvania's standards for compensation are different than SMCRA's because Pennsylvania's are based on the repair or replacement costs while SMCRA's are based on the decrease in value. Even though the standards are different, OSM believes that Pennsylvania's compensation standard is no less stringent than SMCRA since the standard is based on providing the amount of funds required to repair or fully replace the structure. For example, in one federal enforcement case, the construction estimate to repair the structure significantly exceeded the appraisal of the structure's diminished value. Therefore, the Director finds that Pennsylvania's compensation standard is no less effective than § 720(a)(1) of SMCRA because it provides compensation equal to the amount needed by a property owner to repair a structure or to purchase, or build, another structure.

OSM was concerned with Pennsylvania's use of the phrase ''in the proximity of the mine.'' SMCRA has no distance limitation. Accordingly, we asked PADEP in our letter of June 21, 1999, what the phrase ''in the proximity of the mine'' meant in regard to the protections afforded by this section. Pennsylvania in its response of June 1, 2000, indicated that while the term was not defined in statute or regulation, it understands the term to mean the structures defined in this section do not have to be directly above the mine workings in order to be covered by repair or compensation requirements, and that the phrase recognizes the fact that subsidence effects often extend outward from points where coal is extracted in a mine. Pennsylvania stated that the phrase is not interpreted to impose any specific distance limitations. We find this explanation does not place any limits on the location of protected structures and find section 5.4(a) (52 P.S. 1406.5d(a)) no less stringent than SMCRA.

While section 5.4(a) (52 P.S. 1406.5d(a)) is no less stringent than SMCRA in terms of definition and coverage of types of structures, the Director is requiring Pennsylvania to amend section 5.4 (52 P.S. 1406.5d) to require the *prompt* repair and compensation for those structures protected under § 720(a)(1) of SMCRA and 30 CFR 817.121(c)(2). The Director is requiring this amended protection because section 5.5 (52 P.S. 1406.5e) of the BMSLCA, and its implementing regulations under 25 Pa. Code 89.143a, proposed a number of subsidence damage investigation and enforcement procedures that do not provide for prompt repair of, or compensation for, covered structures in certain situations. In requiring the added language, the enforcement actions requiring prompt repair and compensation will, at a minimum, be handled in conformance with Chapter 86, Subchapter H (Enforcement & Inspection), which requires citation and abatement of violations within a reasonable time.

Please see the Director's findings for sections 5.4(a)(1) through (3) (52 P.S. 1406.5d(a)(1) through (3)) for further information.

Section 5.4(a)(1) and (a)(2) (52 P.S. 1406.5d(a)(1) and (a)(2)). These sections provide restoration or compensation to owners of buildings that are accessible to the public, including commercial, industrial or recreation buildings and their permanently affixed structures as well as any noncommercial buildings customarily used by the public. The federal rule at 30 CFR 817.121(c)(3) requires that non-commercial buildings must be repaired or the owner compensated. Non-commercial building is defined at 30 CFR 701.5 as a building that is used as a public building or a community or institutional building as that term is defined in 30 CFR 761.5. Buildings used only for commercial, agricultural, industrial, or retail or other commercial enterprises are not protected in the federal rules.

While Pennsylvania's statute protects some buildings not protected by the federal rules, we were concerned that the Pennsylvania statute was not as inclusive of buildings protected by the federal regulations. In our letter to Pennsylvania of June 21, 1999, we asked for clarification. In its response to us dated June 1, 2000, Pennsylvania indicated that the regulations implementing the changes to the act define the term noncommercial building to include any community or institutional building covered by definition in section 25 Pa. Code 86.101. The definition of community or institutional building in section 25 Pa. Code 86.101 includes scientific and correctional facilities and structures used for public services. Pennsylvania stated that its program therefore includes all noncommercial buildings covered under the federal program.

We find that Pennsylvania's explanation is reasonable and find that the approved program does cover the same structures as the federal definition describes in the term ''community or institutional buildings'' and is no less effective than the federal rules. The Director is approving this portion of the amendment.

Section 5.4(a)(3) (52 P.S. 1406.5d(a)(3)). This section reads in part:

> Restoration or compensation for structures damaged by underground mining—(a) Whenever underground mining operations conducted under this act cause damage to any of the following surface buildings overlying or in the proximity of the mine:
>
> (3) dwellings used for human habitation and permanently affixed appurtenant structures or improvements in place on the effective date of this section or on the date of the first publication of the application for a Mine Activity Permit or a five-year renewal thereof for the operations in question and within the boundary of the entire mine as depicted in said application; * * * the operator of such coal mine shall repair such damage or compensate the owner of such building for the reasonable cost of its repair or the reasonable cost of its replacement where the damage is irreparable.

In our letter to Pennsylvania of June 21, 1999, we noted that:

> There is no federal requirement that the structure be within the boundary of the entire mine. Pennsylvania does not define ''improvements.'' The Black's Law Dictionary defines improvements as ''[a] valuable addition made to property (usually real estate) or an amelioration in its condition, amounting to more than mere repairs or replacement, costing labor or capital, and intended to enhance its value, beauty or utility or to adapt it for new or further purposes. Generally, buildings, but may also include any permanent structure or other development, such as a street, sidewalks, sewers, utilities, etc.'' Thus, the regulation may be internally inconsistent since it appears that ''improvements'' and ''permanently affixed appurtenant structures,'' which is defined by Pennsylvania, include some of the same things.

In its response of June 1, 2000, Pennsylvania noted that DEP considers improvements to include ''valuable additions'' that fall outside the scope of the term *permanently affixed appurtenant structures.* Pennsylvania stated that according to the rules of statutory construction, only improvements must be completely within the boundary of the mine before the operator has a duty to repair or compensate. Pennsylvania also declared that only improvements must be in place on the effective date of the proposed regulations or on the first publishing date of the mine permit.

The federal rules protect structures in place at the time of mining that are installed on, above or below, or a combination thereof, the land surface if that building, structure or facility is used in connection with an occupied residential dwelling (see 30 CFR 817.121(c)(2) and the definition of ''occupied residential dwelling and structures related thereto'' at 30 CFR 701.5).

Pennsylvania's protection of structures is more limited than the federal requirements because it requires improvements to be in place at the time of permit application or at the time of the five-year renewal and within the boundary of the mine. The federal definition protects improvements that were in place at the time of mining as long as they were related to a structure. Thus, a structure could have been built after the permit application or five-year renewal and still be protected at the time of mining under the federal rules, but not under section 5.4(a)(3) (52 P.S. 1406.5d(a)(3)) of the BMSLCA. Additionally, this section of the BMSLCA requires improvements to be located within the boundary of the mine to be protected. The federal rules do not have a similar restriction.

The Director finds that the portion of section 5.4(a)(3) (52 P.S. 1406.5d(a)(3)) that states ''dwellings used for human habitation and permanently affixed appurtenant structures or improvements'' is no less effective than the federal regulations and is approving it. This portion of the amendment provides protections similar to that provided by the federal definition of the term ''occupied residential dwelling and structures related thereto'' found at 30 CFR 701.5. However, the Director has found the following phrase in section 5.4(a)(3) (52 P.S. 1406.5d(a)(3)) to be less effective than the federal regulations in protecting some structures related to residential dwellings: '' * * * in place on the effective date of this section or on the date of first publication of the application for a Mine Activity Permit or a five-year renewal thereof for the operations in question and within the boundary of the entire mine as depicted in said application.'' The Director is not approving this phrase. For the Director's findings on the term ''permanently affixed appurtenant structures'' please see the discussion of that term under 25 Pa. Code 89.5.

Section 5.4(a)(4) (52 P.S. 1406.5d(a)(4)). This section provides restoration or compensation of agricultural structures. Pursuant to 30 CFR 817.121(c)(3), repair or compensation for material damage to agricultural structures is required to the extent allowed under state law. The Director is approving this portion of the amendment because it provides for protection for structures that are not protected under the federal regulations and is consistent with 30 CFR 817.121(c)(3).

Section 5.4(b) (52 P.S. 1406.5d(b)). This section allows an operator to replace an irreparably damaged agricultural structure with a structure satisfying the functions and purposes served by the damaged structure before such damage occurred—if the structure was used for a purpose different from that for which it was originally constructed. Pursuant to 30 CFR 817.121(c)(3), repair or compensation for material damage to agricultural structures is required to the extent allowed under state law. The Director is approving this portion of the amendment because it provides for protection for structures that are not protected under the federal regulations and is consistent with 30 CFR 817.121(c)(3).

Section 5.4(c) (52 P.S. 1406.5d(c)). This section indicates the operator will not be required to repair a structure or compensate a structure owner for damage if the operator demonstrates the landowner denied access to the operator to conduct a premining survey. The section requires operators to serve notice on the landowner by certified mail or by personal service of the landowners rights established by sections 5.4, 5.5, and 5.6. In our letter to Pennsylvania dated June 21, 1999, we noted that under the federal rule at 30 CFR 817.121(c)(4)(iii), denial of access does not relieve the operator of its duty to repair or compensate landowners for subsidence damage. In its response to us dated June 1, 2000, Pennsylvania noted that:

> Act 54 imposes a statutory presumption of liability on the coal operator for structural damages and consistent with OSM's rationale, a homeowner who denies access, would preclude the regulatory agency and the operator from determining where the operator's liability should begin and where it should end.
>
> All Pennsylvania has done with respect to the right to assert a claim for compensation is to condition that right; it has not denied anyone their right to seek a repair or compensation remedy in the event their properties are damaged by mine subsidence. The requirement that persons who intend to invoke their rights to repair or compensation allow the potentially responsible mine operator an opportunity to inspect the property prior to mining is a reasonable condition and one which does not render Pennsylvania's program less effective.

The Director finds that section 5.4(c) (52 P.S. 1406.5d(c)) is less effective than the federal regulations because the federal rules requiring repair or compensation for damage to non-commercial buildings and dwellings and related structures (30 CFR 812.121(c)(2)) do not provide exception for any reason when an operator's underground mining operation has caused subsidence damage. Pennsylvania has failed to account for information that the homeowner or the regulatory authority possesses. It is possible that the homeowner may hire someone to conduct a survey. In Pennsylvania's scenario, the homeowner would have no relief under Act 54 even though he had relevant information that showed causation. As a result, the Director is not approving this provision.

Additionally, in the preamble to the March 31, 1995, federal rules on subsidence (60 FR at 16741), OSM discussed the effect of a landowner denying access to a property and concluded that in any enforcement proceeding OSM or the regulatory authority may take the effect of the denial into account in determining what weight, if any, to give to the rebuttable presumption of causation. Even though the federal rules concerning the presumption were suspended, this part of the preamble clearly indicates OSM's intent that enforcement actions would proceed even if landowners denied permission to operators to conduct premining surveys. There are no passages in the preamble or the regulations that relieve operators of their duty to repair or compensate landowners for subsidence damage to covered structures.

Section 5.5(a) (52 P.S. 1406.5e(a)). This section requires owners of buildings described in section 5.4(a) (52 P.S. 1406.5d(a)), who believe removal of coal has caused mine subsidence damage, to notify the operator of the damage. In our letter to Pennsylvania dated June 21, 1999, we noted that this section appears to be less effective than the federal regulations because EPAct does not require landowners to notify operators of damage.

In its response of June 1, 2000, Pennsylvania noted that:

> This is the same concern presented in OSM Statutory Comment 5 regarding [BMSLCA's] water supply replacement provisions. The response to that comment is also applicable here. In making this comment, OSM is failing to consider that in reality there has to be interaction between the operator and the structure owner in order to expedite the repair/compensation process. The sooner this interaction occurs, the sooner claim resolution can begin. The claim resolution procedures set forth in section 5.5 are intended to promote settlements without [PA]DEP involvement. [PA]DEP involvement is intended as a ''second tier'' of protection for the structure owner.

Similar to the issues discussed under section 5.2(a)(1) (52 P.S. 1406.5b(a)(1)) for water loss notifications, the Director carefully considered Pennsylvania's proposed requirement that landowners notify operators with a claim of subsidence damage. The Director considered the proposal relative to the requirements for subsidence damage protection (30 CFR 817.121) and the requirements for addressing complaints by citizens (30 CFR part 842). As with water loss, it is important to note that under both the federal and the proposed Pennsylvania requirements, material damage resulting from underground mining that employs planned subsidence is not prohibited. Once damage occurs, the federal requirements require prompt repair or compensation, while Pennsylvania's proposed requirements provide for a six-month period where the property owner and the permittee address the damage without PADEP involvement. Specifically at issue under section 5.5(a) (52 P.S. 1406.5e(a)) is whether the requirement for landowners to notify operators of mine subsidence damage is in any way less effective than federal requirements.

EPAct and 30 CFR 817.121(c) are silent on how the operator is notified of structure damage. Under 720 of SMCRA, permittees are responsible for prompt repair or compensation regardless of whether they are contacted by property owners or by the regulatory authority in cases where the property owners fail to do so. Under section 5.5(a) (52 P.S. 1406.5e(a)) of the BMSLCA, Pennsylvania has elected to establish a subsidence damage notification procedure that requires the property owner to contact the operator. The proposed changes to the Pennsylvania program are silent on any procedures that will be followed in the event that landowners choose to notify the Department rather than the operator. However, under section 5.5(b) (52 P.S. 1406.5e(b)), 5.5(c) (52 P.S. 1406.5e(c)), and 25 Pa. Code 89.143(a), Pennsylvania established a specific procedure for

investigating and enforcing structure repair and compensation requirements for those landowners that provide notification to the operator.

The Director is approving the portion of section 5.5(a) (52 P.S. 1406.5e(a)) of the BMSLCA that deals with notification of the operator. Because EPAct and the federal rules do not set a federal standard concerning structure damage notification, the proposed Pennsylvania requirement that the property owner contact the operator is not inconsistent with SMCRA and 30 CFR 817.121(c). The Director's required amendment of section 5.4(a) (52 P.S. 1406.5d(a)) will insure the prompt repair and compensation for all structures covered by EPAct whether or not a landowner has contacted the operator as required by section 5.5 (52 P.S. 1406.5e) of BMSLCA or 25 Pa. Code 89.143(a).

However, the Director finds that use of the phrase ''removal of coal has caused mine subsidence'' when describing suspected causes of subsidence damage is not as effective as SMCRA. Section 720(a) of SMCRA provides that operators are responsible for repairing or compensating landowners for subsidence damages caused by underground coal mining operations. Underground coal mining operations include more activities than just the removal of coal. Consequently, section 5.5(a) (52 P.S. 1406.5e(a)) acts to limit the operator's responsibility for repair or compensation to subsidence damage caused by coal removal. As a result, the Director is requiring Pennsylvania to amend section 5.5(a) (52 P.S. 1406.5e(a)) to make it clear that operators are responsible for subsidence damage from underground mining operations, not just removal of coal. As a result of this amendment, structure owners who suspect subsidence damage was caused by underground coal mining operations would report such damage to the operator.

Section 5.5(b) (52 P.S. 1406.5e(b)). This section provides that landowners may file a claim with the Department if they cannot come to terms with the operator within six months from the date of notice as to the cause of the damage. This section also requires all claims to be filed within two years of the date damage to the building occurred. In our letter to Pennsylvania dated June 21, 1999, we indicated that the portion of this section dealing with the six-month notification period does not appear to be as effective as the federal regulation because it does not require the prompt repair or compensation of subsidence damage. In our letter to Pennsylvania dated June 23, 2000, we indicated that the portion of the statute requiring claims to be filed within two years of the date damage to the building occurs ends or limits the Department's responsibilities if a written claim was filed more than two years after the date of damage to the building. The statute does not allow the Department to conduct required investigations or require operators (via notice of violation) to promptly repair or compensate landowners for damage to structures protected by EPAct, and may not be as effective as the federal regulations. While Pennsylvania does not have a termination of jurisdiction rule, these provisions are contrary to the federal rule at 30 CFR 700.11(d).

In its letter to us dated June 1, 2000, Pennsylvania indicated that section 5.5(b) (52 P.S. 1406.5e(b)) does not necessarily preclude the prompt settlement of structure damage claims, it simply gives mine operators and structure owners six months to come to terms on the means of settlement. With regard to the provision requiring claims to be filed within two years of the date damage to the building occurs, Pennsylvania wrote in its letter to us dated July 14, 2000, that the limitation only pertains to PADEP's responsibility to conduct an investigation and does not release a mine operator from the responsibility to repair or compensate for structure damage. The statute does not prohibit PADEP from becoming involved in the resolution of cases that have gone beyond the two-year claim period. Pennsylvania further noted this section does not end PADEP's responsibilities. Section 5.5(c) (52 P.S. 1406.5e(c)) requires PADEP to issue orders directing the operator to compensate the owner or cause repairs to be made. Section 9 (52 P.S. 1406.9) also authorizes the Department to issue orders necessary to aid in enforcement of BMSLCA, which includes the enforcement of the operator's obligation to compensate the owner or to repair the subsidence. With regard to the comment that this provision is contrary to the federal rule at 30 CFR 700.11(d), Pennsylvania reiterated the argument made in response to our comment on section 5.1(b) (52 P.S. 1406.5a(b)).

The proposal by Pennsylvania to provide a specific claims investigation procedure for affected property owners was carefully considered by the Director relative to the existing requirements for addressing complaints by citizens under 30 CFR part 842 and the approved Pennsylvania program (see 49 FR 10253–58, March 20, 1984). As we stated in the preamble to the federal EPAct rules, ''existing citizen complaint procedures are adequate and appropriate to address surface owner complaints of subsidence damage.'' (60 FR at 16735). Currently, the approved Pennsylvania program contains a citizen complaint investigation and enforcement process consistent with 30 CFR part 842. That process does not prohibit citizen complaints or limit the ability of the Department to take enforcement actions based on whether a landowner has served notice to an operator alleging damage.

Pennsylvania's response with respect to the six-month delay pointed out that ''it simply gives mine operators and structure owners six months to come to terms on the means of settlement.'' The EPAct and implementing rules provide sufficient flexibility to take into account site conditions, potential repair and compensation alternatives, and other relevant factors to judge whether a permittee has met the requirement to promptly repair or compensate for structure damage.

Additionally, section 5.5(b) (52 P.S. 1406.5e(b)) ignores the requirement of 720(a)(1) of SMCRA, which requires the prompt repair of, or compensation for protected structures. It allows six months to pass without operator action even if the operators reach an early impasse with the owners. Section 5.5(b) (52 P.S. 1406.5e(b)) would prohibit Pennsylvania from issuing orders to require repair or compensation before the six months elapsed. As noted under Section 5.4(a) (52 P.S. 1406.5d(a)), the Director is requiring Pennsylvania to amend its program to require prompt repair and compensation in all cases of EPAct-covered structure damage. To ensure that Pennsylvania possesses adequate authority to issue orders requiring the prompt repair and compensation, regardless of whether the structure owner has notified the Department or the permittee, the Director is not approving the portion of this provision that states '' * * * within six months of the date of the notice.''

Additionally, the section provides that a landowner's right to a Department investigation will expire after two years. We disagree that the Ninth Circuit case cited by Pennsylvania is applicable. The proposition held by the court of appeals and cited by Pennsylvania states that when a federal statute contains no limitations provisions, an applicable state statute of limitations should be applied, unless there is an analogous federal statute of limitations, or the state law would frustrate or interfere with national policies. The Ninth Circuit case is the general rule applicable to litigation involving private parties. However, this general rule and its exceptions do not apply to government

actions brought to vindicate public interests. *Dole* v. *Local 427, International Union of Electrical, Radio and Machine Workers,* 894 F.2d 607 (3d Cir. 1990). The general rule that applies to government actions is that ''no statute of limitations will be applied in civil actions brought by the Government, unless Congress explicitly imposes such time limitations.'' Dole, 894 F.2d at 610. The court of appeals in Dole, held that no statute of limitations applies to the government so long as a public purpose is served. While section 5.5(b) (52 P.S. 1406.5e(b)) of BMSLCA may benefit a private individual, this is no different than the situation in Dole, where the Department of Labor sued to enforce individual and public rights. The fact that a public suit may benefit a private individual does not change the application of the general rule for government actions. Under the provisions of the BMSCLA, it will be Pennsylvania that will enforce the requirement that the operator restore or compensate a protected structure. The requirement to restore a structure or compensate its owner not only serves a private purpose it also serves a public purpose as well. The requirements not only protect private structure owners but buildings owned by the government or that serve as a public building or a community or institutional building.

Further, a time limit on subsidence damage claims is adverse to the general scheme of SMCRA. For example, this section would limit Pennsylvania's ability to take enforcement actions and would interfere with the administrative methods established by 517 and 521 of SMCRA since it could be difficult to determine when the structure was initially affected. Since every state could have a different time period, this section is contrary to the public policy of § 102(a) of SMCRA, which established a nationwide program and with 101(g) of SMCRA. It could also preclude some citizen suits because in some situations, a citizen might not know that Pennsylvania was not taking action until the two years elapsed. Additionally, if a request for an investigation by Pennsylvania of possible subsidence damage was not made within two years from the date of structure damage, Pennsylvania would not consider it a violation, because Pennsylvania would not investigate the claim. Since it would not be a cited violation, this would prevent Pennsylvania from holding operators responsible for subsidence damage to structures.

We disagree with Pennsylvania that this time limitation is no less effective than the federal rules. It is contrary to 505(b) of SMCRA, which prohibits any state program from having state laws or regulations that are inconsistent with SMCRA. Failure to repair or compensate a structure owner is in direct contrast with the purposes of EPAct and the federal regulations that require without a time limit, the repair or compensation of protected structures. This is evidenced by language in the Congressional House report that specifically rejected the Secretary's regulations originally promulgated in 1983. The 1983 regulations only required repair or compensation of structures to the extent allowed under state law. H.R. Rep. No. 474, 102d Cong., 2d Sess, pt. 8 at 132 (1992). This provision is also contrary to citizen complaint investigation standards.

With respect to Pennsylvania's characterization that the limitation only pertains to PADEP's responsibility to conduct an investigation, and does not release a mine operator from the responsibility to repair or compensate for structure damage, the Director observes that the net effect will be the same because the only entity, PADEP, that could enforce the obligation is prohibited from doing so. As stated in section 5.6(c) (52 P.S. 1406.5f(c)), the duty to repair or compensate for subsidence damage is the sole and exclusive remedy for such damage. If the operator refuses to acknowledge responsibility for repair or the amount of compensation, and the structure owner did not request an investigation within two years, the owner has no recourse because the state is prohibited from conducting an investigation. We also assert that Pennsylvania's characterization that the statute does not prohibit PADEP from becoming involved in the resolution of cases that have gone beyond the two-year claim period is misleading. First, Pennsylvania fails to elaborate on how this could occur. OSM interprets the statute to mean that, if the owner asks for an investigation within two years but Pennsylvania's enforcement goes beyond two years, Pennsylvania can continue its enforcement. If the owner fails to ask for an investigation, Pennsylvania is precluded from enforcement. Finally, we disagree with Pennsylvania's statement that section 5.5 (52 P.S. 1406.5e) does not end PADEP's responsibilities because of section 5.5(c) (52 P.S. 1406.5e(c)) of the BMSLCA. Section 5.5(c) (52 P.S. 1406.5e(c)) is completely reliant on section 5.5(b) (52 P.S. 1406.5e(b)). Section 5.5(c) (52 P.S. 1406.5e(c)) states that ''[t]he department shall make an investigation of a claim within thirty days of receipt of the claim.'' Section 5.5(b) (52 P.S. 1406.5e(b)) states if the parties are unable to agree, the owner of the building may file a claim with the Department. Thus, the reference to claim in 5.5(c) (52 P.S. 1406.5e(c)) refers to the claim discussed in 5.5(b) (52 P.S. 1406.5e(b)). Section 5.5(c) (52 P.S. 1406.5e(c)) does not discuss any other options or alternatives. Based on the above rationale, the Director finds this section less effective than the federal rules and is not approving this section.

Finally, since our decision is based on the above, we feel it is unnecessary to address Pennsylvania's interpretation of the federal regulations describing termination of jurisdiction.

Section 5.5(c) (52 P.S. 1406.5e(c)). This section provides that the Department will make an investigation of damage claims within 30 days of receipt of the claim and, within 60 days following the investigation, make a determination in writing whether the damage was caused by subsidence. This section further provides that the Department will issue a written order directing the operator to compensate the structure owner or repair the damaged structure within six months or a longer period. In our letter to Pennsylvania dated June 21, 1999, we indicated that the Department's written determination made within 60 days of the investigation appears to be less effective than the citizen complaint procedures of 30 CFR 842.12(d). The federal rule requires a response within 10 days of the inspection. We further indicated that if the term ''written order'' means a notice of violation, this section does not appear to be as effective as the federal regulations in that six months exceeds the total time allowed for abatement of a notice of violation. ''The total time for abatement under a notice of violation, including all extensions, shall not exceed 90 days from the date of issuance, except upon a showing * * * [of] one or more of the circumstances in paragraph (f) of this section.'' 30 CFR 843.12(c).

In its response to us dated June 1, 2000, Pennsylvania wrote that:

> The 60-day period the department is allotted to make a determination cannot be compared with the 10-day period specified in 30 CFR 842.12(d). [This section] requires PADEP to reach a final determination within 60 days of making an investigation, where the federal requirement only relates to communication with the complainant * * *. There is nothing within 30 CFR 842.12(d) that specifically requires OSM to take enforcement action within the 10-day period. [A]lso * * * 30 CFR 842.12(d) establishes no minimum time period in which OSM must conduct its investigation.

With regard to the term ''written order'' as used in this section, Pennsylvania indicated that the term does not refer to a notice of violation, but rather to an administrative order directing the operator to repair or compensate the structure owner.

As noted in the finding for section 5.2(b)(2), the preamble to the federal EPAct rules states ''existing citizen complaint procedures are adequate and appropriate to address surface owner complaints of subsidence damage.'' (60 FR at 16735). The proposal by Pennsylvania to provide a claims investigation procedure for affected property owners was carefully considered by the Director relative to the existing requirements for addressing complaints by citizens under 30 CFR part 842. Currently, the approved Pennsylvania program regarding citizen complaint investigations and enforcement provides that if an inspection is made, the Department will notify the citizen within 10 days of completion of the inspection of the results. If no inspection is made, the Department will notify the citizen within 15 days of receipt of the complaint. Pennsylvania's approved citizen complaint rules are consistent with 30 CFR 842.12 and allow latitude in determining what constitutes the point at which an inspection is complete to allow for the collection of necessary data (see 49 FR 10253–58). As a result, citizen complaint inspection duties could be completed prior to the 60 days specified in section 5.5(c) (52 P.S. 1406.5e(c)). Under existing citizen complaint rules, once an inspection is completed, Pennsylvania has 10 days to describe its enforcement action or lack thereof. However, under the proposed provision, an inspection may occur in a short time, e.g. two days, but Pennsylvania would have longer than 10 days to notify the citizen of its inspection results, e.g., 60 days. This is inconsistent with Pennsylvania's existing rules and the federal rules regarding time requirements for responding to citizen complaints. To be consistent with the federal rules, Pennsylvania, within 10 days of completing all the inspection duties, must notify the citizen of its decision. Therefore, the Director is approving this portion of section 5.5(c) (52 P.S. 1406.5e(c)) to the extent that it is consistent with, or more timely than, the citizen complaint procedures and is requiring Pennsylvania to amend its program to the extent the time frames are longer than the citizen complaint procedures.

Section 5.5(c) (52 P.S. 1406.5e(c)) also provides that if the Department found that mining caused damage, it shall issue an order directing the operator to compensate or cause repairs to be made within six months or longer. The Director is not approving the use of an administrative order that allows the operator six months or longer to repair damage or compensate landowners. Federal regulations at 30 CFR 843.12(c) provide that ''The total time for abatement under a notice of violation, including all extensions, shall not exceed 90 days from the date of issuance, except upon a showing * * * [of] one or more of the circumstances in paragraph (f) of this section.'' Because the federal rules require Pennsylvania to issue a notice of violation within an abatement date of not more than 90 days, instead of an administrative order with an abatement date of six months or longer, the Director is not approving the following phrase from section 5.5(c) (52 P.S. 1406.5e(c)), '' * * * within six months or a longer period if the department finds that the occurrence of subsidence or subsequent damage may occur to the same building as a result of mining.'' This phrase is not as effective as the federal regulations that call for orders with abatement dates less than 90 days except for the circumstances noted in section 30 CFR 843.12(c).

Finally, the Director finds that Pennsylvania's use of the term ''underground coal mining'' when making a damage determination is less stringent than section 720 of SMCRA. SMCRA requires underground coal mining *operations* to comply with requirements for damage repair or compensation. The term ''underground coal mining operations'' is more expansive than Pennsylvania's definition of underground mining, which is defined at 25 Pa. Code 89.5 to be the extraction of coal. Therefore, the Director is requiring Pennsylvania to amend this section to insure that any written damage determinations made by PADEP will take into account subsidence due to underground coal mining operations as required by SMCRA.

Section 5.5(d) (52 P.S. 1406.5e(d)). This section provides that the operator will not be liable for repairs or compensation in an amount exceeding the cost of replacement of the damaged structure. The section also provides that the occupants of a damaged structure shall be entitled to additional payment for reasonable actual expenses incurred for temporary relocation and for other actual reasonable incidental costs agreed to by the parties or approved by the Department. Section 720(a)(1) of SMCRA provides for repair of material damage, which ''shall include rehabilitation, restoration, or replacement of the damaged'' structure or dwelling or compensation in the full amount of the decrease in value resulting from the subsidence. As previously stated in section 5.4(a) (52 P.S. 1406.5d(a)), the cost of replacement is no less stringent than section 720(a)(1) of SMCRA. There is no federal counterpart to provisions for relocation and incidental expenses provided for in this portion of the statute. However, because these provisions provide additional benefits not required by the federal regulations, the Director finds that they are not inconsistent with the requirements of SMCRA or the federal regulations and is approving this portion of the amendment.

Section 5.5(e) (52 P.S. 1406.5e(e)). This section requires an operator to deposit in escrow, an amount equal to the cost of repair or compensation if the operator appeals an order issued by the Department. In our letter to Pennsylvania dated June 21, 1999, we indicated that this section appears to be less effective than the federal regulations because there is no provision, in cases where the operator has not appealed an order of the Department, to insure that funds are available for the repair or compensation for damage to structures and no financial guarantees for the restoration of water supplies.

Pennsylvania responded in their letter of June 1, 2000, that section 6(b) (52 P.S. 1406.6(b)) of BMSLCA authorizes PADEP to require bonds of appropriate amounts to ensure the applicant's faithful performance of mining or mining operations, in accordance with the provisions of sections 5, 5.4, 5.5, and 5.6 (52 P.S. 1406.5, 1406.5d, 1406.5e, and 1406.5f). These requirements are in addition to the escrow requirements of section 5.5(e) (52 P.S. 1406.5e(e)). These bonds must be posted at the time of permit application and will be in place to ensure the repair of any and all structure damage that occurs during the term of the mining permit. Finally, Pennsylvania noted that the requirements to post escrow under section 5.5(e) (52 P.S. 1406.5e(e)) functions as an additional assurance that repairs or compensation will be provided by mine operators.

OSM agrees that the escrow requirements of section 5.5(e) (52 P.S. 1406.5e(e)) are separate from the requirements of section 6(b) (52 P.S. 1406.6(b)) of BMSLCA. Section 5.5(e) (52 P.S. 1406.5e(e)) allows an appeal right that is found within numerous other sections of Pennsylvania's approved program and is no less

effective than the federal regulations at 30 CFR 843.16 (implementing 30 CFR 840.13). The federal rules do not require an operator to place into escrow the cost of repair or compensation before it can appeal an order. Since an escrow account will serve to protect affected structure owners, the Director finds this section consistent with the federal rules and therefore, approves it.

Section 5.5(f) (52 P.S. 1406.5e(f)). This section provides for Pennsylvania to take enforcement action if an operator fails to repair or compensate for subsidence within six months or longer period as the Department has established or if the operator has failed to perfect an appeal of an order. The section further provides for payment of the escrow deposit if an operator fails to repair or compensate for damage after exhausting its right of appeal.

The Director has found that the escrow accounts provide a level of protection beyond that of the federal requirements and is approving that portion of the amendment. However, the portion of section 5.5(f) (52 P.S.1406.5(e)(f)) allowing six months or longer to pass before the Department takes an enforcement action is less effective than the federal regulations at 30 CFR 843.12(c), which requires abatement of violations within 90 days. As stated in the finding for 5.5(c) (52 P.S. 1406.5e(c)), an operator's failure to repair or compensate for subsidence damage is a violation that must be abated within 90 days. To ensure that Pennsylvania has the ability to enforce the necessary requirements of EPAct consistent with 30 CFR part 843, the Director is not approving the portion of section 5.5(f) (52 P.S. 1406.5e(f)) that states: '' * * * within six months or longer or such period as the department has established or fail to perfect an appeal of the department's order directing such repair or compensation.'' Not approving the portion of the phrase dealing with the six-month period will remove an enforcement impediment to Pennsylvania. As noted, the Director is also not approving language in that phrase that deals with perfecting an appeal of the Department's orders. This phrase prevents Pennsylvania from issuing a cessation order if an operator takes an appeal, thus acting as a stay. This provision is not as effective as the federal regulations at 30 CFR 843.16(b), which indicate that the filing of an application for review and request for a hearing cannot operate as a stay of any notice or order.

Section 5.5(g) (52 P.S. 1406.5e(g)). This section provides that, with the exception of 5.5(f) (52 P.S. 1406.5e(f)), existence of unresolved claims of subsidence damage shall not be used by the Department as a basis for withholding permits from, or suspending review of, permit applications submitted by the mine operator against whom such claims have been made. In our letter to Pennsylvania dated June 21, 1999, we asked Pennsylvania to clarify what is meant by the phrase ''existence of unresolved claims.''

In response, Pennsylvania indicated that the term is self-explanatory. Structure damage claims often take some time to be resolved and this section simply provides that an operator is not deemed to be in violation of its repair or compensation obligations as long as it is, in good faith, attempting to make appropriate repairs or pay appropriate compensation, or has posted the escrow amount necessary to contest its liability. Finally, Pennsylvania also noted that a claim is only an allegation, not a violation.

The Director is approving this section. The federal regulations at 30 CFR 773.12 and 773.14 prohibit the issuance of a permit if the applicant has outstanding violations unless both the abatement period for the notice of violation has not yet expired and the applicant has certified in the permit application that the violation is being satisfactorily corrected. Pennsylvania's provision is consistent with these regulations since no violation was issued.

Section 5.6(a) (52 P.S. 1406.5f(a)). This section deals with voluntary agreements for repair or compensation for damages to structures caused by underground mining. In our letter of June 21, 1999, to Pennsylvania we noted that several times within this section Pennsylvania refers to ''releases'' that could be a part of the agreements. We asked Pennsylvania to clarify what is meant by the term ''release'' as used in this section.

In its letter to us dated June 1, 2000, Pennsylvania responded that BMSLCA does not define release. As the term is used in section 5.6 (52 P.S. 1406.5f), it refers to a written discharge, acquittance or receipt given in exchange for consideration as part of an agreement that establishes the means and methods by which the mine operator will repair or compensate for subsidence damage. Pennsylvania noted that section 5.6(a) (52 P.S. 1406.5f(a)) recognizes that mine operators who have fully met their statutory obligations are entitled to obtain a release that precludes the landowner from seeking multiple recoveries on the same claim.

The Director is approving this portion of the amendment. While there is no direct federal counterpart to this section, agreements were recognized in the preamble to the federal rule, so long as the agreements did not ''negate the requirements of the Energy Policy Act.'' 60 FR at 16735. Since this section provides that ''remedies shall be no less than those necessary to compensate the owner of a building for the reasonable cost of its repair,'' the Director finds this section not inconsistent with the requirements of SMCRA and the federal regulations.

Section 5.6(b) (52 P.S. 1406.5f(b)). This section provides that when a voluntary agreement for repair or compensation is executed between landowners and operators, every deed for conveyance of property covered by the agreement must contain a recital of the agreement and any release contained within the agreement. There is no federal counterpart to this portion of the amendment. Since this section provides notice of the agreement and any release, the Director finds it not inconsistent with the requirements of SMCRA and the federal regulations and is approving it.

Section 5.6(c) (52 P.S. 1406.5f(c)). This section provides:

> The duty created by section 5.5 to repair or compensate for subsidence damage to the buildings enumerated in section 5.4(a) shall be the sole and exclusive remedy for such damage and shall not be diminished by the existence of contrary provisions in deeds, leases or agreements which relieved mine operators from such duty. Nothing herein shall impair agreements entered into after April 27, 1966, and prior to the effective date of this section, which, for valid consideration, provide for a waiver or release of any duty to repair or compensate for subsidence damage. Any such waiver or release shall only be valid with respect to damage resulting from the mining activity contemplated by such agreement.

In our letter of June 21, 1999, to Pennsylvania we noted that this section appears to be less effective than the federal regulations because the post-1966 structures may have entered into an agreement that would have provided requirements that are less effective than 30 CFR 817.121(c). OSM has determined that ''[a]n underground mining operation has a statutory obligation to repair, which may not be negated by a prior agreement.'' 60 FR at 16736.

In its response to us dated June 1, 2000, Pennsylvania noted that:

> ''Post 1966 structures'' or structures built after 4/27/66 had no protection from subsidence damage under BMSLCA until 8/21/94, the effective date of section 5.6. Because BMSLCA did not provide protection to these structures, it is highly unlikely there are any agreements providing for repair or compensation for ''post 1966 structures.'' Pre 1966 dwellings were completely protected;

they could not be damaged by subsidence. Post 1966 agreements for pre 1966 dwellings would have to have provided the homeowners more than full compensation or repairs otherwise the owner would not have had any reason to enter into an agreement with a mine operator. Accordingly, this provision is at least as effective as 30 CFR 817.121(c).

The Director approves the following language:

The duty created by section 5.5 to repair or compensate for subsidence damage to the buildings enumerated in section 5.4(a) shall be the sole and exclusive remedy for such damage and shall not be diminished by the existence of contrary provisions in deeds, leases or agreements which relieved mine operators from such duty.

There is no requirement in the federal rules that Pennsylvania have a requirement in addition to the duties enumerated in sections 5.4 and 5.5 (52 P.S. 1406.5d and 1406.5e) of the BMSLCA. If Pennsylvania wishes to eliminate any common law duties, that is within its discretion. Accordingly, this language is not inconsistent with the requirements of SMCRA and the federal regulations. However, the Director does not find Pennsylvania's explanation with regard to the last two sentences of section 5.6(c) (52 P.S. 1406.5f(c)) to be persuasive, because to do so would render that portion of section 5.6(c) (52 P.S. 1406.5f(c)) meaningless. The Director finds that the last two sentences: ''Nothing herein shall impair agreements entered into after April 27, 1966, and prior to the effective date of this section, which, for valid consideration, provide for a waiver or release of any duty to repair or compensate for subsidence damage. Any such waiver or release shall only be valid with respect to damage resulting from the mining activity contemplated by such agreement'' are inconsistent with the federal regulations at 30 CFR 817.121(c) and the Director is not approving this portion of section 5.6(c) (52 P.S. 1406.5f(c)). While OSM recognizes that EPAct and Act 54 are not retroactive, this language seems to provide that private agreements entered into between April 27, 1966 and August 21, 1994, waiving or releasing any duty to repair or compensate for subsidence damage remain effective, including for mining activities beyond the effective date of the protections of EPAct and Act 54, if contemplated by the agreement. Thus, these sentences provide that agreements made after April 1966 and before August 21, 1994, do not have to comply with the provisions of the BMSLCA if they are written contrary to the requirements of section 5.5 (52 P.S. 1406.5e) of BMSLCA. Section 720(a)(1) and 30 CFR 817.121(c)(2) require repair or compensation for affected structures. Agreements are acceptable if the terms of the agreement meet ''the requirements under paragraph 817.121(c)(2).'' 60 FR at 16735. ''Any permittee/owner agreements cannot negate the requirements of the EPAct to repair or compensate for subsidence related material damage to occupied residential dwellings and related structures as well as non-commercial buildings.'' *Id.* Since this provision negates the requirements of section 5.5 (52 P.S. 1406.5e) of BMSLCA, it is inconsistent with the federal regulations.

Section 5.6(d) (52 P.S. 1406.5f(d)). This section provides that any agreement made under section 5.6(c) (52 P.S. 1406.5f(c)) must be included in every deed for conveyance of the property covered by the agreement. The Director is not approving this provision to the extent that section 5.6(c) has not been approved. Therefore, section 5.6(d) (52 P.S. 1406.5f(d)) is inconsistent with the requirements of SMCRA and the federal regulations to the extent that section 5.6(c) (52 P.S. 1406.5f(c)) is inconsistent.

Section 6 (52 P.S. 1406.6). This section was modified by both removing former subsection (a) and replacing references in subsection (b) to sections 4 and 5 with references to sections 5, 5.4, 5.5 and 5.6. The section now requires applicants to file bonds conditioned upon the applicant's faithful performance of mining or mining operations in accordance with sections 5, 5.4, 5.5 and 5.6. While this section requires submission of bonds at the time of application, there is no requirement similar to that found in 30 CFR 817.121(c)(5), which requires an adjustment of bond amount for subsidence damage to structures or water supplies if repair or replacement is not completed within 90 days of occurrence of damage.

In our letter of June 21, 1999, we indicated that section 5.5(e) (52 P.S. 1406.5e(e)), regarding establishment of escrow accounts appears to be less effective than the federal regulations because there is no provision in cases where the operator has not appealed an order of the Department to insure that funds are available for the repair or compensation for damage to structures and no financial guarantees for the restoration of water supplies. After reviewing Pennsylvania's response to that comment, we found that the escrow provisions of section 5.5(e) (52 P.S. 1406.5e(e)) were separate from the requirements of 30 CFR 817.121(c)(5) to increase the bond in response to subsidence damage. However, by reviewing Pennsylvania's response to our comment in section 5.5(e) (52 P.S. 1406.5e(e)), we found that section 6 was required to be amended to include this provision.

Pennsylvania responded in their letter of June 1, 2000, that:

Section 6(b) of BMSLCA authorizes PADEP to require bonds of appropriate amounts to ensure the applicant's faithful performance of mining or mining operations, in accordance with the provisions of sections 5, 5.4, 5.5, and 5.6.

These requirements are in addition to the escrow requirements of section 5.5(e). These bonds must be posted at the time of permit application and will be in place to ensure the repair of any and all structure damage that occurs during the term of the mining permit.

As Pennsylvania noted, these bonds will be posted at the time of permit application. However, it is very difficult to predict the amount of subsidence damage that will occur to structures, therefore, it may be necessary to raise the bond amounts after damage has occurred. There is no provision in the Pennsylvania program that requires the state regulatory authority to increase bonds in response to subsidence damages that are not repaired or replaced within 90 days. Pennsylvania's only mechanism for increasing the bond amount is if a party in interest requests such an increase. The federal rules at 30 CFR 817.121(c)(5) require the regulatory authority to increase the bonding amounts for the permittee. Pennsylvania's requirement places the burden on someone other than the state to monitor the bonding amounts. The state regulatory authority is the only appropriate entity to determine when the bonds must be adjusted. In addition, Pennsylvania's program fails to require a bond or a bond increase if damage occurs to the land or water resources. The federal rule at 30 CFR 817.121(c)(5) requires an increase in the performance bond when subsidence related material damage to land occurs, or when a protected water supply is contaminated, diminished or interrupted. Therefore, the Director is requiring Pennsylvania to amend its program to comply with the provisions of 30 CFR 817.121(c)(5).

Section 9.1(a) (52 P.S. 1406.9a(a)). This section requires that if the department determines, and notifies a mine operator, that a proposed mining technique or extraction ratio will result in subsidence that causes an imminent hazard to human safety, the technique or extraction ratio will not be permitted unless the mine operator, prior to mining, takes measures approved by the Department to eliminate the imminent hazard.

Even though there is no corresponding federal regulation, the Director is approving this section because it is consistent with 30 CFR 817.121(f), which requires the suspension of underground mining if imminent danger to inhabitants of urbanized areas, cities, towns or communities is found.

Section 9.1(b) (52 P.S. 1406.9a(b)). This section provides that a mining technique or extraction ratio that the Department determines will cause irreparable damage to buildings in section 5.4(a)(3) or (4) (52 P.S. 1406.5d(a)(3) or (4)) will not be permitted unless the building owner, prior to mining, consents to such mining or the mine operator, prior to mining, agrees to take measures approved by the Department to minimize or reduce impacts resulting from subsidence to such buildings.

The Director finds that there is no comparable provision in the federal regulations because the federal regulations do not discuss irreparable damage. The irreparable damage standard for this portion of the amendment provides a level of protection to structures threatened with irreparable damage that is not provided for in federal regulations. The Director is approving this portion of the amendment.

Section 9.1(c) (52 P.S. 1406.9a(c)). This section provides that underground mining activities shall not be conducted beneath or adjacent to public buildings and facilities, churches, schools and hospitals, impoundments, or bodies of water with volume of 20 acre-feet or more unless the subsidence control plan demonstrates that subsidence will not cause material damage to, or reduce the reasonably foreseeable use of, such facilities. The Department may limit the percentage of coal extracted under or adjacent to these features or facilities or to any aquifer or body of water that serves as a significant water source for any public water supply system if it finds that it is necessary in order to minimize the potential for material damage. The Director finds that this portion of the amendment is no less effective than the federal regulations at 30 CFR 817.121(d), which have substantially the same requirements.

Section 9.1(d) (52 P.S. 1406.9a(d)). This section provides that nothing in the act shall supersede standards related to the prevailing hydrologic balance contained in federal SMCRA and regulations promulgated by Pennsylvania to obtain or maintain jurisdiction over the enforcement and administration of SMCRA or any standard contained in Pennsylvania's Clean Streams Law. Even though there is no direct federal counterpart, the Director is approving this section because it does not limit or change the rights of landowners or the responsibilities of operators as provided for in federal regulations, nor is it inconsistent with the requirements of SMCRA and the federal regulations.

Section 15 (52 P.S. 1406.15). This section was repealed by Act 54. The section allowed landowners to purchase enough support coal beneath a structure to provide protection from subsidence. There are no similar provisions in the federal regulations. The Director is approving repeal of this section because repealing it does not make Pennsylvania's program less effective than the federal regulations regarding protection of structures.

Section 17.1 (52 P.S. 1406.17a). This section lists various conducts that are unlawful under the BMSLCA. Act 54 changed the section by removing the phrase ''to cause land subsidence or injury'' as one of the examples of unlawful conduct.

The Director is approving this change to the BMSLCA. The federal rules anticipate that subsidence will occur and provide compensation for, or repair of, damages to homes and other structures as well as replacement of adversely affected water supplies. Subsidence in itself is not unlawful conduct under the federal regulations.

The portion of the amendment that removes injury as unlawful conduct is also approved. The Director finds that the portions of the BMSLCA that require prevention of hazards to human safety and material damage to certain buildings (section 9.1) provide a similar level of protection from injury that the federal regulations provide. The Director is approving the changes to section 17.1 because they are not inconsistent with SMCRA and the federal regulations.

Section 18.1 (52 P.S. 1406.18a). This section requires the Department to compile data in deep mine permit applications, monitoring reports, and other data submitted by operators, and from enforcement actions. The data are to be used to determine the effects of deep mining on subsidence of surface structures and on water resources. A report on the analysis of the data is to be presented to the Governor, the General Assembly, and the Citizen's Advisory Council every five years.

There is no direct federal counterpart to this regulation but the Director is approving this section because it does not limit or change the rights of landowners or the responsibilities of operators as provided for in federal regulations nor is it inconsistent with the requirements of SMCRA and the federal regulations.

Summary Table

The table below summarizes the Director's findings with regard to each section of the BMSLCA.

Sections of the BMSLCA that are approved	Sections of Act 54 that are conditionally approved or that are required to be amended	Sections of Act 54 that are not approved in whole or in part
Repeal of Section 4 (52 P.S. 1406.4))	5(b) (52 P.S. 1406.5(b))	5.1(b) (52 P.S. 1406.5a(b)).
5.1(a)(2) and (3) (52 P.S. 1406.5a(a)(2) and (3)).	5.1(a)(1) (52 P.S. 1406.5a(a)(1))	5.2(b)(2) (52 P.S. 1406.5b(b)(2)).
5.2(a)(1), (2), and (3) (52 P.S. 1406.5b(a)(1), (2), and (3)).	5.4(a) (52 P.S. 1406.5d(a))	5.2(d) (52 P.S. 1406.5b(d)).
5.2(b)(1) (52 P.S. 1406.5b(b)(1))	5.5(a) (52 P.S. 1406.5e(a))	5.2(e)(2) (52 P.S. 1406.5b(e)(2)).
5.2(c) (52 P.S. 1406.5b(c))	6 (52 P.S. 1406.6))	5.2(g), (h), and (i) (52 P.S. 1406.5b(g), (h), and (i)).
5.2(e)(1) and (3) (52 P.S. 1406.5b(e)(1) and (3)).		5.3(a), (b), and (c) (52 P.S. 1406.5c(a), (b), and (c)).
5.2(f) (52 P.S. 1406.5b(f))		5.4(a)(3) (52 P.S. 1406.5d(a)(3)).
5.2(j) (52 P.S. 1406.5b(j))		5.4(c) (52 P.S. 1406.5d(c)).
5.2(k) (52 P.S. 1406.5b(k))		5.5 (b) and (c) (52 P.S. 1406.5e(b) and (c)).
5.4(a)(1), (2) and (4) (52 P.S. 1406.5d(a)(1), (2), and (4)).		5.5(f) (52 P.S. 1406.5e(f)).
5.4(b) (52 P.S. 1406.5d(b))		5.6(c) and (d) (52 P.S. 1406.5f(c) and (d)).

Sections of the BMSLCA that are approved	Sections of Act 54 that are conditionally approved or that are required to be amended	Sections of Act 54 that are not approved in whole or in part
5.5 (d), (e) and (g) (52 P.S. 1406.5e(d), (e) and (g)).		
5.6(a) and (b) (52 P.S. 1406.5f(a) and (b)).		
9.1(a), (b), (c), and (d) (52 P.S. 1406.9a (a), (b), (c), and (d)).		
Repeal of Section 15 (52 P.S. 1406.15).		
17.1 (52 P.S. 1406.17a).		
18.1 (52 P.S. 1406.18a).		

B. Changes to the Regulations at 25 Pa Code Chapter 89

Set forth in the explanation below and the table that follows, pursuant to SMCRA and the federal regulations at 30 CFR 732.15 and 732.17, are the Director's findings concerning the amendments to the regulations at 25 Pa. Code Chapter 89. The Director's reasons for approving, conditionally approving, requiring amendments to, or not approving regulations in 25 Pa. Code Chapter 89 are noted. The sections are listed in the order they appear in Chapter 89 for easy reference.

Section 89.5, definition of the term ''de minimis cost increase.'' This definition is used in section 89.145a relating to water supply replacement performance standards. It states an increase in the cost of providing a restored or replaced water supply is acceptable if the increased cost of operating the replaced or restored water supply is de minimis. This section defines de minimis as either less than 15% of the annual operating and maintenance costs of the previous water supply that is restored or replaced, or is less than $60 per year. In our letter to Pennsylvania dated June 21, 1999, we indicated that there was no counterpart in federal regulations to this definition. However, the preamble to the federal regulations at 60 FR 16726 provides that the payment of replacement water supply operation and maintenance costs in excess of premining costs is a logical aspect of the requirement to replace a water supply. The goal of the provision is to insure that the owner or user of the water supply is made whole, and that no additional costs are passed on to the water supply user after the replacement supply is installed, beyond those that are customary and reasonable for the premining supply. We concluded that the definition appears to be less effective than the federal regulation because it passes costs in excess of premining costs to the landowner or water supply user.

In their June 1, 2000, response to our letter, Pennsylvania indicated that:

> The court decisions in Carlson Mining Co v. DER, EHB 91–547–E, Gioia Coal v. DER, 1986 EHB 82, and Buffy and Landis v. DER, 1990 EHB 1665 defined what constituted an adequate replacement water supply. These Court decisions addressed increased operation and maintenance costs, increased maintenance, control, accessibility, reliability and performance of the replacement water supply. The Court found that a property owner has been made whole if the increase in operating and maintenance costs is de minimis. The Pennsylvania case law is codified in these regulations to facilitate understanding of the law by water supply users and the regulated community.
>
> The Pennsylvania regulations, which incorporated court determinations of what cost increases were more than de minimis and were required to be paid by the operator are as effective as OSM's provision requiring a permittee to ''replace any drinking, domestic or residential water supply that is contaminated, diminished or interrupted by underground mining activities.'' The federal regulations do not establish any specific requirements for operating and maintenance costs * * *

The Director is not approving the definition of de minimis cost increase from 25 Pa. Code 89.5 because it allows some increased costs of operating and maintaining a restored or replaced water supply system to be passed on to the landowner or water user. Depending on the original costs, both a 15% increase as well as a $60 increase could be excessive. The increased costs are still beyond the intent of the federal regulations, that ''[t]he owner or user of the water supply is made whole, and that no additional costs are passed on to the water supply user.'' (60 FR 16726). Only by fully subsidizing all costs associated with the replacement or restored water supply will that intent be realized.

Finally, OSM notes that the cases cited by PADEP were all issued before Act 54 and EPACT was enacted (except Carlson, which was issued 5 days after EPAct's date). Accordingly, these cases could not contemplate EPAct's requirements.

Section 89.5, definition of the term, ''dwelling.'' Pennsylvania is proposing the definition of the term dwelling to be ''a building or other structure that, at the time subsidence occurs, is used either temporarily, occasionally, seasonally or permanently for human habitation.''

This definition is the same as OSM's definition of the phrase ''occupied dwelling and structures related thereto'' found in 30 CFR 701.5, except it does not include related structures. The related structure information is found in Pennsylvania's regulations at 25 Pa. Code 89.5 in the definition of ''permanently affixed appurtenant structures.'' The Director finds that Pennsylvania's definition of the term ''dwelling'' when used in conjunction with the phrase ''permanently affixed appurtenant structure'' is no less effective than the federal definition of ''occupied dwelling and structures related thereto,'' so long as the limitations on the definition of ''permanently affixed appurtenant structure'' discussed later in this rulemaking are implemented.

Section 89.5, definition of the term, ''fair market value.'' Pennsylvania's definition of fair market value is the amount at which property would exchange hands between a willing buyer and a willing seller, neither being under any compulsion to buy or sell and both having reasonable knowledge of the relevant facts. The only place this term is used in Chapter 89 is at 25 Pa. Code 89.152(a)(5)(i) with regard to an operator's purchase of a property to gain relief from the responsibility of water supply replacement. Because that section of the regulations has not been approved and is not self-sustaining, there is no need for the Pennsylvania program to contain the definition of ''fair market value.'' As a result, the Director is not approving the definition of the term ''fair market value'' found in 25 Pa. Code 89.5.

Section 89.5, definition of the term, ''irreparable damage.'' Through its definition of ''irreparable damage,'' Pennsylvania has created four ways in which a structure can be classified as irreparably damaged. They include: (1) Where the cost of repair would exceed the cost of replacement; (2) the damage is so great that its repair is prohibited by law; (3) it is impossible or impractical to restore the structure to its previous strength; or (4) for structures recognized as historical or architecturally

significant, one of the following: the damage would adversely affect the structures historical or architectural value, or the cost of repair with the same craftsmanship and historically and architecturally equivalent components exceeds the cost of replacement, or it is impossible to repair or restore the historical and architectural value of the structure with the same craftsmanship and historically and architecturally-equivalent components.

There is no federal counterpart to this definition. The federal rules define ''material damage'' at 30 CFR 701.5 as (1) Any functional impairment; (2) any physical change that has a significant adverse impact on the land; or (3) any significant change in the condition, appearance or utility. Any material damage must be corrected (for structures, the other option is compensation). Pennsylvania's irreparable damage standard, does not contemplate correction. Thus, by creating an irreparable damage standard, Pennsylvania has defined a class of damage that may be more severe than the material damage standard found in federal regulations. As discussed later, there are certain situations, where Pennsylvania does not require protection from material damage. However, the Director is approving the definition of the phrase ''irreparable damage'' since it is not inconsistent with the federal rules. The Director notes that this approval does not affect the requirements afforded by the material damage standard found in federal regulations.

Section 89.5, definition of the term, ''material damage.'' Pennsylvania's definition is substantially the same as and therefore no less effective than the federal definition of material damage at 30 CFR 701.5. The Director is approving Pennsylvania's definition of the term ''material damage.''

Section 89.5, definition of the term, ''noncommercial building.'' Pennsylvania's definition is substantially the same as, and therefore no less effective than, the federal definition of noncommercial building at 30 CFR 701.5. The Director is approving Pennsylvania's definition of the term ''noncommercial building.''

Section 89.5, definition of the term, ''permanently affixed appurtenant structures.'' This term is used in conjunction with structures listed in 25 Pa. Code 89.142a(f)(1)(i) and (iii) relating to subsidence control performance standards. The term is defined as a structure or facility securely attached to the land surface if that structure or facility is adjunct to, and used in connection with, structures listed in 25 Pa. Code 89.142a(f)(1)(i) and (iii).

In our letter to Pennsylvania dated June 21, 1999, we indicated that the federal definition of the term ''occupied residential dwelling and structures related thereto'' does not require that the appurtenant structure be ''securely attached to the land.'' This is a meaningful difference in coverage for some structures that would be set on the surface but not readily removable, i.e., storage sheds that are not built on a foundation but are set in place on the surface of the ground. We asked Pennsylvania to clarify how the proposed definition will account for damage to appurtenant structures not attached to the land.

In their letter to us of June 1, 2000, Pennsylvania indicated that under Pennsylvania law, those structures which are not permanently affixed appurtenant structures would be generally classified as improvements. Accordingly, these structures would be protected under 25 Pa. Code 89.142a(f) to the extent that they were in place on August 21, 1994, or on the date of first publication of the permit application or permit renewal application and within the boundary of the entire mine as depicted in the permit application. In addition, Pennsylvania noted that structures that are not attached to the ground are less prone to experience subsidence damage. Since these structures do not have foundations, they are not subject to the stresses that result from ground movement.

The Director has found that Pennsylvania's definition of ''permanently affixed appurtenant structures'' is less effective than the federal regulations. The federal definition of the term ''occupied residential dwelling and structures related thereto'' at 30 CFR 701.5, lists examples of protected facilities. Pennsylvania has adopted a similar listing of protected facilities in its definition of ''permanently affixed appurtenant structures.'' However, in that definition, Pennsylvania requires that these facilities be ''securely attached to the land surface.'' Pennsylvania's protection of structures is less inclusive than the federal regulations because the federal requirements do not require structures to be attached to the land surface to be protected. This finding is acknowledged by Pennsylvania in its preamble when discussing the definition of ''permanently affixed appurtenant structures'' by stating that the definition does ''not include all structures encompassed by the Federal definition'' and it only includes those structures permanently affixed to the ground. 28 Pa.B. 2766.

The Director is not approving the portion of the definition that requires structures to be ''securely attached to the land surface.'' The federal regulations (definition of the term ''occupied residential dwelling and structures related thereto'' at 30 CFR 701.5) require protection for structures or facilities installed on, above or below, or a combination thereof, the land surface, if that building structure or facility is adjunct to or used in connection with an occupied residential dwelling. There is no requirement that such structures or facilities be securely attached to the land surface. By protecting only structures that are securely attached to the land surface, Pennsylvania is creating a class of facility or structure that will not be afforded the protections of the federal regulations.

Section 89.5, definition of the term, ''public buildings and facilities.'' Pennsylvania defines ''public buildings and facilities' as structures that are owned or leased and principally used by a government agency for public business or meetings and anything built, installed, assembled or used by a government agency to provide a public service. Pennsylvania then listed examples of ''public buildings and facilities.'' In the federal program ''public building'' is defined at 30 CFR 761.5 to mean any structure that is owned or leased, and principally used by a governmental agency for public business or meetings. Pennsylvania's definition of ''public buildings and facilities'' includes everything in the federal definition. The Director finds that Pennsylvania's definition of ''public buildings and facilities'' is no less effective than the federal definition of ''public building'' and is approving the definition.

Section 89.5, definition of the term, ''public water supply system.'' There is no corresponding federal definition to this term. Pennsylvania defines ''public water supply system'' as a water delivery system which does one of the following; serves at least 15 service connections used by year-round residents or regularly serves at least 25 year-round residents, or provides water to a public building, church, school, hospital or nursing home. Pennsylvania uses this term several times throughout Chapter 89 of its regulations to describe protections to public water supplies. The Director is approving this definition because it is used to protect water supplies that are protected by the federal regulations and it also could be used to protect water supplies that may

not be protected under the federal program. Therefore the definition is not inconsistent with the requirements of SMCRA and the federal regulations.

Section 89.5, definition of term, ''rebuttable presumption area.'' Pennsylvania defines ''rebuttable presumption area'' in the context of water supply replacement, to mean the area in which an operator is presumed responsible for diminishing, contaminating or interrupting a water supply. The area is defined by projecting a 35-degree angle from the vertical from the outside of any area where the operator has extracted coal from an underground mine. There is no federal counterpart to this definition. The Director is approving the definition because landowners and water users will benefit from the presumption through a more rapid response by operators to their complaints. The Director finds that this definition is not inconsistent with the requirements of SMCRA at section 720(a)(2) and the federal regulations at 30 CFR 817.41(j) to provide prompt replacement of protected water supplies.

Section 89.5, definition of the terms, ''underground mining,'' and ''underground mining operations.'' Pennsylvania's definition of ''underground mining'' is the extraction of coal in an underground mine. The federal definition of the term ''underground mining activities'' is found at 30 CFR 701.5 and is a combination of two parts: (a) Surface operations incident to underground extraction of coal or in situ processing, such as construction, use, maintenance, and reclamation of roads, above-ground repair areas, storage areas, processing areas, shipping areas, areas upon which are sited support facilities including hoist and ventilating ducts, areas utilized for the disposal and storage of waste, and areas on which materials incident to underground mining operations are placed; and (b) Underground operations such as underground construction, operation, and reclamation of shafts, adits, underground support facilities, in situ processing, and underground mining, hauling, storage, and blasting. Pennsylvania's proposed definition of ''underground mining operations'' is substantially the same as (b) of the federal definition of ''underground mining activities.'' Pennsylvania's definition of ''underground mining'' is consistent with how the term underground mining is used in paragraph (b) of the federal definition of ''underground mining activities'' since it is an underground operation. The Director finds that the definitions of the terms ''underground mining'' and ''underground mining operations'' is consistent with the federal definition of ''underground mining activities'' and is approving both definitions.

Section 89.5, definition of the term, ''water supply.'' Pennsylvania's definition of ''water supply'' includes existing sources of water used for domestic, commercial, industrial or recreational purposes or for agricultural uses. It also includes supplies that serve a public building or a noncommercial structure customarily used by the public, including churches, schools and hospitals. This definition differs from the federal definition of the term ''drinking, domestic or residential water supply'' found at 30 CFR 701.5. Pennsylvania has stated in the preamble to its regulations that ''[t]he definition of ''water supply'' includes all water supplies covered under the federal program, including those which are used for irrigating noncommercial gardens and noncommercial agricultural operations.'' 28 Pa.B. 2767.

The Pennsylvania term is more inclusive in that it protects agricultural supplies, which the federal regulations do not protect unless they are used for direct human consumption or human sanitation, or domestic use. However, it does not appear to include the appurtenant delivery systems of the federal definition. As stated in our finding to section 5.1(a)(3) (52 P.S. 1406.5a(a)(3)), we expressed this concern to Pennsylvania in our letter of June 21, 1999. Pennsylvania responded by stating ''connections from a well or spring are permanent affixed appurtenant structures that must be repaired by the mine operator.'' Pennsylvania went on to state that damage to a water main and its connecting piping would be regulated under 25 Pa. Code 89.142a(g) if it was owned by the water company. If the connecting piping was owned by the property owner, the mine operator would be required to repair. Additionally, Pennsylvania's proposed performance standards at 25 Pa. Code 89.145a(f)(4) indicate that replacement of a water supply shall include the installation of any piping, pumping equipment and treatment equipment necessary to put the replaced water source into service. This performance standard includes the items contemplated by the appurtenant delivery system requirements of the federal regulations.

Therefore, based on the Pennsylvania Bulletin language, Pennsylvania's explanation, and when used with the performance standards of 25 Pa. Code 89.145a(f)(4), the Director finds that the definition of ''water supply'' is no less effective than the federal definition of ''drinking, domestic, or residential water supply'' and is approving this portion of the amendment.

Section 89.33. This section deals with the geologic data requirements of the permit. Pennsylvania made only two minor revisions to this section; the nonsubstantive addition of the metric equivalent of 200 feet (60.96 meters) after the term of ''200 feet'' in subsection (a)(1), and the requirement that the operation plan include a description of the coal seam thickness (to be added to subsection (a)(1) as item (iii)). The addition of this requirement necessitated designating former section (iii) as (iv) and designating former section (iv) as (v). The federal rule at 30 CFR 784.20(b)(3) requires a subsidence control plan to contain a description of seam thickness. Therefore, this addition is no less effective than the federal regulations and the Director is approving this portion of the amendment.

Section 89.34. Pennsylvania has made two minor changes in this portion of the amendment. Both are found in subsection (a)(1)(i). This section lists the information operators must submit in their application regarding groundwater. The first sentence of subsection (i) formerly read, ''The results of a groundwater inventory of existing wells, springs and other groundwater resources, providing information on location, quality, quantity, depth to water and usage for the proposed permit area and potentially impacted offsite areas.'' The first sentence now reads, ''The results of a groundwater inventory of existing wells, springs and other groundwater resources, providing information on location, ownership, quality, quantity, depth to water and usage for the proposed permit area and adjacent area.'' The Director finds that the changes to this section are no less effective than the requirements for ground water information found in the federal regulations at 30 CFR 784.14(b)(1) since the federal rules also require ownership information on the proposed permit and adjacent areas. The Director is approving the changes to this section.

Section 89.35. This section involves prediction of the hydrologic consequences of mining. The first sentence of the section was modified by adding the phrase ''and whether underground mining activities may result in contamination, diminution or interruption of any water supplies within the permit or adjacent area'' to the end of the sentence. The sentence now reads, ''The operation plan shall

include a prediction of the probable hydrologic consequences of the proposed underground mining activities upon the quantity and quality of groundwater and surface water within the proposed permit, adjacent and general areas under seasonal flow conditions, and whether underground mining activities may result in contamination, diminution or interruption of any water supplies within the permit or adjacent area.''

The federal regulations regarding this section are found at 30 CFR 784.14(e)(3)(iv). These regulations require the probable hydrologic consequences determination to include findings on whether underground mining activities conducted after October 24, 1992, may result in contamination, diminution or interruption of a well or spring in existence at the time the permit application is submitted and used for domestic, drinking, or residential purposes within the permit or adjacent areas. The Pennsylvania amendment requires a finding for any water supplies within the permit or adjacent area. This would make the Pennsylvania program more inclusive than the federal regulation, which limits required findings for only those water supplies used for domestic, drinking or residential purposes. Since Pennsylvania's program would require findings for those water supplies covered by the federal program, the Director finds this addition no less effective than 30 CFR 784.14(e)(3)(iv) and is approving this portion of the amendment.

Section 89.36. This section describes the information an operator needs to submit to ensure the protection of the hydrologic balance. Pennsylvania's amendment adds a subsection (c) to this section. Subsection (c) states, ''The operation plan shall include a description of the measures which will be taken to replace water supplies which are contaminated, diminished or interrupted by underground mining activities. An operator is not required to provide a replacement water supply prior to mining as a condition for securing a permit.''

The federal regulations regarding information to be submitted in a subsidence control plan are found at 30 CFR 784.20. Subsection (b)(8) of the federal rule requires a description of the measures to be taken in accordance with 30 CFR 817.41(j) and 817.121(c) to replace adversely affected protected water supplies or to mitigate or remedy any subsidence-related material damage to the land and protected structures. Pennsylvania's regulation language is substantively identical to and no less effective than the federal regulation with regard to replacement of water supplies. The Director is approving this portion of the amendment.

Section 89.67. Pennsylvania is amending subsection (b) by requiring surface mining activities associated with an underground mine to be conducted in a manner that minimizes damage, destruction or disruption of services provided by oil, gas and water wells; oil, gas and coal-slurry pipelines; railroads; electric and telephone lines; and water and sewage lines that pass over, under or through the permit area, unless otherwise approved by the owner of those surface facilities and the Department. Formerly, this section applied to all underground mining activities instead of surface mining activities associated with an underground mine, as it now reads.

In responding to commenters who favored retention of the existing language at 25 Pa. Code 89.67(b), Pennsylvania stated in the preamble to the proposed regulations that:

> The [Environmental Quality] Board believes that it is appropriate to narrow the scope of this regulation to address only those activities which take place at surface sites associated with an underground mine. There is sufficient authority in Chapter 89, Subchapter F (relating to subsidence control) to regulate those aspects of the underground mining activity which take place underground. Together, these requirements are no less effective than the Federal regulation in 30 CFR 817.180. (28 Pa.B. 2768)

The authority in Chapter 89, Subchapter F of the Environmental Quality Board referred to was 25 Pa. Code 89.142a(g)(1). This section requires underground mining to be planned and conducted in a manner that minimizes damage, destruction or disruption in services provided by the same utilities listed in 25 Pa. Code 89.67. As noted in the Director's findings regarding 25 Pa. Code 89.142a(g)(1), we found that 25 Pa. Code 89.142a(g)(1) did not provide the same level of protection for utilities that is required under the federal regulations at 30 CFR 817.180. The Director is requiring 25 Pa. Code 89.142a(g)(1) to be amended to insure that all underground mining activities are conducted in a manner consistent with 30 CFR 817.180. Please see the Director's finding at 25 Pa. Code 89.142a(g)(1) for more information.

In changing the language of 25 Pa. Code 89.67(b), Pennsylvania has limited protection to utilities from surface mining activities associated with an underground mine where prior to the proposed amendment, protection was extended from underground mining activities. However, because of Pennsylvania's reliance on 25 Pa. Code 89.142a(g)(1) to make 25 Pa. Code 89.67(b) no less effective than the federal regulations, the Director believes that the amendment required at 25 Pa. Code 89.142a(g)(1) will serve to accomplish that goal. As a result, the Director is approving Pennsylvania's amendment to 25 Pa. Code 89.67(b) as not inconsistent with 30 CFR 817.180.

Section 89.141(a). Subsection (a) deals with information operators are required to submit regarding the geology overlying the proposed permit area. Subsection (a) formerly read, ''The application shall include a description of the geology overlying the proposed permit area, from the surface down to the first stratum below the coal seam to be mined. For the same strata, a detailed description and cross-section shall be provided from available test borings and core samples. A copy of the information developed for 25 Pa. Code 89.33 (relating to geology) may be submitted to meet the requirement in this subsection.''

The subsection now reads, ''The application shall include a description of the geology overlying the proposed permit area, from the surface down to the first stratum below the coal seam to be mined. The description shall include geologic conditions which are relevant to the likelihood or extent of subsidence or subsidence related damage. For the same strata, a detailed description and cross-section shall be provided from available test borings and core samples. A copy of the information developed for 25 Pa. Code 89.33 (relating to geology) may be used as appropriate to meet the requirements of this section.''

The addition of the language requiring information on geologic conditions that are relevant to the likelihood or extent of subsidence or subsidence related damage makes this section no less effective than the federal regulations at 30 CFR 784.20(b)(3), which require the subsidence control plan to include a description of the physical conditions that affect the likelihood or extent of subsidence and subsidence-related damage. The Director is approving this portion of the amendment.

Section 89.141(d). This subsection requires the permit application to include a subsidence control plan that describes the measures that will be taken to control the subsidence effects from the proposed underground mining. In our letter of June 21, 1999, we also indicated that 25 Pa. Code 89.141(d) did not address the provisions of 30 CFR 784.20(b)(8) that require the subsidence control plan to contain a description of

the measures to be taken to replace adversely affected protected water supplies or to mitigate or remedy any subsidence-related material damage to the land and protected structures.

Pennsylvania indicated in its response to us dated June 1, 2000, that its regulations include requirements to describe the measures to be taken to replace adversely affected protected water supplies and mitigate subsidence-related material damage to the land and protected structures. Requirements relating to descriptions of water supply replacement measures are found in 25 Pa. Code 89.36(c). Descriptions of the measures to be used to correct material damage to surface land are required under 25 Pa. Code 89.141(d)(5). Descriptions of measures to prevent irreparable damage to dwellings and agricultural structures are required under 25 Pa. Code 89.141(d)(6). Requirements relating to the protection of public buildings and other specified structures are found in 25 Pa. Code 89.141(d)(3).

We agree with Pennsylvania that the requirements relating to descriptions of measures to remedy contamination, diminution, or interruption of water supplies found within 25 Pa. Code 89.36(c) and that the descriptions to prevent material damage to surface lands found at 25 Pa. Code 89.141(d)(5) are as effective as the requirements found in the federal regulations. However, we have found that Pennsylvania's amendment does not require the subsidence control plan to contain descriptions of measures to mitigate or remedy material damage to non-commercial buildings and residential structures as required by 30 CFR 784.20(b)(8). The Pennsylvania program discusses prevention of damage to structures but does not discuss the measures in the subsidence control plan to be taken once damage has occurred to structures. While the Director is able to approve the general requirements of 25 Pa. Code 89.141(d), subsection (d)(6) is required to be amended to insure that the subsidence control plan contains a description of measures to mitigate or remedy material damage to all protected structures. See the discussion at 25 Pa. Code 89.141(d)(6) for more information regarding the required amendment.

The Director is also requiring 25 Pa. Code 89.141(d) to be amended because of the use of the term ''underground mining.'' Please see the combined finding regarding use of the term ''underground mining'' as opposed to ''underground mining operations'' at the end of the regulation section for more information.

Section 89.141(d)(2). Pennsylvania deleted all the existing wording of subsection (d)(2) and added the following wording which requires, ''A narrative describing whether subsidence, if it is likely to occur, could cause material damage to, or diminish the value or reasonably foreseeable use of, any structures or could contaminate, diminish, or interrupt water supplies.''

In our letter to Pennsylvania of June 21, 1999, we indicated that the term ''if it is likely to occur'' is not the same as the federal narrative requirement of 30 CFR 784.20 (a)(2) ''indicating whether subsidence, if it occurred, could cause material damage * * *'' We indicated that the federal term requires more information because it would tell the public whether material damage or water loss would occur if subsidence occurred. PADEP regulations would only tell the public whether material damage or water loss would occur if subsidence is likely to occur. We also stated that while 30 CFR 784.20(a)(2) requires the narrative to take into account subsidence effects on ''renewable resource lands,'' 25 Pa. Code 89.141(d)(2) fails to include ''renewable resource lands.''

In its response of June 1, 2000, Pennsylvania indicated that its regulation at 25 Pa. Code 89.141(d) requires a subsidence control plan for all underground mines without regard to the presence of overlying structures, water supplies or renewable resource lands or whether or not those structures and features could suffer material damage as a result of mine subsidence. In doing so, Pennsylvania noted that its regulations are as effective as 30 CFR 784.20(a)(2). Through these plans, DEP and the general public can see how planned mining interfaces with overlying structures and features.

Pennsylvania further noted that in regard to the terminology, there is no practical difference between the phrase ''if it is likely to occur'' and ''if it occurred'' for the purpose of predicting the level of damage. As a practical matter, when full extraction (either longwall mining or pillar extraction during retreat mining) is the principal method of mining, the applicant will always provide information about what will happen when subsidence occurs. In addition, by requiring descriptions of effects in areas where subsidence is ''likely to occur,'' the Pennsylvania regulations provide information that is less speculative. Pennsylvania noted that its regulations provide the general public with more usable information. DEP can predict whether or not subsidence will occur and affect these features. DEP also evaluates the stability of underground mine workings to ensure that subsidence will not occur in locations where it is not planned.

The Director finds that Pennsylvania's explanation is logical and makes this portion of the amendment no less effective than the federal provision at 30 CFR 784.20(a)(2).

Section 89.141(d)(3). This subsection requires that, for each structure and feature, or class of structures and features, described in 25 Pa. Code 89.142a(c) (which include public buildings and facilities, churches, schools and hospitals, certain sized impoundments and bodies of water, and bodies of water or aquifers which serve as a significant source to a public water supply system), there must be a description of the measures to be taken to ensure that subsidence will not cause material damage to, or reduce the reasonably foreseeable uses of, the structures or features. The federal rule at 30 CFR 784.20(b)(5) requires for non-planned subsidence a description of measures that will be taken to prevent or minimize subsidence and subsidence related damage. The federal rule does not limit the descriptions to specific structures or features, while Pennsylvania's regulation does limit the description to specified structures and features. Therefore, the Director finds that to the extent a description is required of some structures and features, this section is no less effective than 30 CFR 784.20(b)(5). However, to the extent that the description is not all inclusive (for example, dwellings, buildings accessible to the public, and noncommercial buildings customarily used by the public would not be included), the Director is requiring that Pennsylvania amend its program to provide the protections of 30 CFR 784.20(b)(5).

Section 89.141(d)(4). This section provides that a subsidence control plan must include a description of the anticipated effects of planned subsidence, if any. The Director finds that this regulation is substantively identical to, and no less effective than, the federal regulation at 30 CFR 784.21(b)(6) and is approving it.

Section 89.141(d)(5). This section requires subsidence control plans to include a description of the measures to be taken to correct any subsidence-related material damage to the surface land. The Director finds that this regulation is substantively identical to, and no less effective than, the portion of the federal regulation at 30 CFR 784.21(b)(8) that requires subsidence control plans to provide a description of measures to be taken to mitigate or remedy any subsidence-related material

damage to the land. The Director is approving this portion of the amendment.

Section 89.141(d)(6). This section requires that the subsidence control plan include a description of measures to be taken to correct any subsidence-related material damage to the structures enumerated in 25 Pa. Code 89.142a(f)(1)(iii)–(v), if the structure owner does not consent to the damage. In our letter to Pennsylvania dated June 21, 1999, we indicated that the federal rules do not have an irreparable damage standard. For occupied dwellings and non-commercial structures, the federal rules apply a no material damage standard for non-planned subsidence and, a minimize damage standard for planned subsidence (unless waived by the owner) [see sections 30 CFR 784.20(b)(7), 817.121(a)(1), and 817.121(a)(2)]. Under OSM regulations for non-planned subsidence, subsidence-related material damage must be prevented (see 30 CFR 817.121(a)(1)) for all structures and features. We indicated that the Pennsylvania regulations do not require the prevention of material damage for occupied dwellings and non-commercial structures (except those specifically protected under 25 Pa. Code 89.142a(c): public buildings and facilities, churches, schools, etc., which is the same as OSM's list at 30 CFR 817.121(d)).

In its response letter to us dated June 1, 2000, Pennsylvania indicated that:

> Section 817.121 does not unequivocally require permittees to prevent material damage to occupied dwellings. It only requires prevention of material damage to the extent technologically and economically feasible. If prevention of material damage is not technologically feasible, the permittee need not prevent material damage. More importantly, the federal regulation provides that material damage need not be prevented if it is not economically feasible. The federal regulation clearly provides for economics to determine whether preventive measures are employed instead of the repair or compensation remedy. Similarly, under Pennsylvania's regulation a permittee will prevent the material damage from occurring if it is more cost effective than paying for repairs or compensation. The Pennsylvania regulation is actually more effective at protecting homes than the federal regulation, because the federal regulation allows for economics to always be the determining factor as to whether any damage prevention measures will be employed by the permittee regardless of the magnitude of damage. The Pennsylvania regulation prohibits economics from being the determinative factor if subsidence will cause irreparable damage. If Pennsylvania determines that the proposed mining will result in irreparable damage to occupied dwellings and appurtenant structures or agricultural structures, it will notify the operator that the proposed mining will not be allowed to occur unless the structure owner consents to the damage or the mine operator agrees to take surface measures to minimize or reduce the level of expected damage. See section 89.141(d)(6) and section 89.142a(d).

The federal regulation at 30 CFR 784.20(b)(5) requires a description of the measures to prevent or minimize subsidence damage to structures. The federal regulation at 30 CFR 784.20(b)(7) requires that, with certain exceptions, when planned subsidence is projected to be used, the subsidence control plan is to contain a description of the methods to be employed to minimize damage from subsidence to non-commercial buildings and occupied residential dwellings. Neither the Pennsylvania statute nor the Pennsylvania regulations state the requirement that an operator must prevent and/or minimize for material damage to occupied residential dwellings and community or institutional buildings not included in 25 Pa. Code 89.141(d)(3) (see Pennsylvania's response to section 9.1(b) and 28 Pa.B. 2768, ''[d]wellings * * * are protected against irreparable damage but not against lesser levels of damage.'').

The Director is approving 25 Pa. Code 89.141(d)(6) to the extent that it provides a description of measures to prevent irreparable damage. However, to the extent the damage to occupied residential dwellings and structures related thereto and community or institutional buildings are not protected in 25 Pa. Code 89.141(d)(3) and they are materially damaged but not irreparably damaged, the Director is requiring Pennsylvania to amend 25 Pa. Code 89.141(d)(6) to insure that the requirements of 30 CFR 784.20(b)(5) and (b)(7) are met.

Section 89.141(d)(7). This section requires subsidence control plans to contain a description of the monitoring, if any, the operator will perform to determine the occurrence and extent of subsidence so that, when appropriate, other measures can be taken to prevent, reduce or correct damage.

The Director is approving this portion of the amendment because it is no less effective than 30 CFR 784.20(b)(4), which requires the subsidence control plans to contain a description of monitoring needed to determine the commencement and degree of subsidence so that measures can be taken to prevent, reduce or correct material damage.

Section 89.141(d)(8). This section requires subsidence control plans to contain a description of the measures to be taken to maximize mine stability and maintain the value and reasonably foreseeable use of the surface land.

There is no federal regulation that directly corresponds to this provision. The Director is approving this section because its purpose is in keeping with the federal requirements that a permittee adopt measures that will maximize mine stability and maintain the value and reasonably foreseeable use of surface lands found in 30 CFR 817.121(a)(1). Additionally, the information required in the subsidence control plan by 25 Pa. Code 89.141(d)(8) is consistent with the federal regulation at 30 CFR 784.20(b)(9), which allows the regulatory authority to require information to demonstrate that the operation will be conducted in accordance with 30 CFR 817.121.

Section 89.141(d)(9). Under this subsection, Pennsylvania requires a description of measures, and discussion of the effectiveness of such measures, that will be taken to maintain the value and foreseeable uses of perennial streams that may be impacted by underground mining. The Director is approving this section because it provides information similar to that in previously approved 25 Pa. Code 89.141(d)(2), which required a discussion of perennial streams based on 25 Pa. Code 89.143(d)(1). Section 89.141(d)(9) is also consistent with the requirements of 30 CFR 784.20(b)(8), which calls for the permit subsidence control plan to contain a description of the measures to be taken to mitigate any subsidence-related material damage to the land (including perennial streams). However, the Director is requiring this section to be amended because of the use of the term ''underground mining.'' Please see the combined finding regarding use of the term ''underground mining'' as opposed to ''underground mining operations'' at the end of the regulation section for more information.

Section 89.141(d)(10). This section requires the subsidence control plan to include a description of the measures to be taken to prevent material damage to perennial streams and aquifers that serve as a significant source to a public water supply system. The Director is approving this section because it provides information similar to that in previously approved 25 Pa. Code 89.141(d)(2), which required a discussion regarding the protection of perennial streams and aquifers that serve as a significant source to a public water supply system based on 25 Pa. Code 89.143(b). The Director also finds 25 Pa. Code 89.141(d)(10) is consistent with the requirements of 30 CFR

817.121(d), which calls for the protection of any aquifer or body of water that serves as a significant water source for a public water supply system.

Section 89.141(d)(11). This section requires subsidence control plans to include a description of utilities and a description of the measures to be taken to minimize damage, destruction, or disruption of utility service. There is no federal regulation that corresponds directly to this portion of Pennsylvania's program. However, it is consistent with 30 CFR 817.180, which requires that all underground mining activities must be conducted in a manner that minimizes damage, destruction or disruption of services provided by wells, pipelines, railroads, electric and telephone lines, and water and sewage lines. It is also consistent with 30 CFR 784.20(b)(9), which requires subsidence control plans to contain information specified by the regulatory authority necessary to demonstrate that the operation will be conducted in accordance with 30 CFR 817.121. The Director is approving this section.

Section 89.142. Pennsylvania is deleting this entire section that required a permittee to submit a general mine map and a six-month map. These provisions have been moved, with some modifications, to 25 Pa. Code 89.154. The modifications include removal of reference to structures in place as of April 27, 1966. Pennsylvania replaced those provisions with requirements that mine maps include the structures listed in 25 Pa. Code 89.142a(f)(1)(i)–(iv) as well as dwellings, public buildings and facilities, churches, schools, and hospitals. The Director is approving the deletion of 25 Pa. Code 89.142 because the deletion of references to April 27, 1966, provides protections no less effective than those found in the federal regulations and because the remaining provisions of 25 Pa. Code 89.142 can be found in 25 Pa. Code 89.154.

Section 89.142a(a). This section requires underground mining to be planned and conducted in accordance with requirements found in subsections (1) through (4). The Director is requiring this section to be amended because of the use of the term ''underground mining.'' Please see the combined finding regarding use of the term ''underground mining'' as opposed to ''underground mining operations'' at the end of the regulation section for more information.

Section 89.142a(a)(1). This section requires underground mining to be planned and conducted in accordance with the subsidence control plan and the postmining land use requirements in 25 Pa. Code 89.88. There is no direct counterpart in federal regulations to this section. The Director is approving 25 Pa. Code 89.142a(a)(1) because it is consistent with the requirements of 30 CFR 784.20(b), which requires subsidence control plans as part of the permit application if premining surveys show that subsidence damage would occur and 30 CFR 773.11, which requires permits for operators to engage in mining operations.

Section 89.142a(a)(2). This section requires underground mining to be planned and conducted in accordance with the performance standards in subsections (b)–(j). There is no direct federal counterpart to this section. The Director is approving this section because it is consistent with the requirements of 30 CFR 817.121, which provide the subsidence control performance standards to be followed when conducting underground mining.

Section 89.142a(a)(3). This section provides that underground mining will not be authorized beneath structures where the depth of overburden is less than 100 feet unless the subsidence control plans demonstrate that the mine workings will be stable and that overlying structures will not suffer irreparable damage. There is no direct federal counterpart. The Director is approving this portion of the amendment because it is consistent with the federal regulation at 30 CFR 817.121(a)(1) that requires permittees to adopt measures consistent with known technology that prevent subsidence from causing material damage, maximize mine stability and maintain the value and reasonably foreseeable use of surface lands.

Section 89.142a(a)(4). This section requires mine operators to adopt measures to maximize mine stability. This section also states that it does not prohibit planned subsidence or room and pillar mining. Section 817.121(a)(1) of the federal rules requires operators to maximize mine stability. Additionally, § 720(a)(2) of SMCRA states that nothing in § 720 of SMCRA shall prohibit underground coal mining operations. Therefore, this provision is not inconsistent with the requirements of SMCRA and the federal regulations and the Director is approving it.

Section 89.142a(b). This section lists the requirements for conducting surveys of protected structures and the conditions that relieve an operator from conducting a survey. As noted in the December 22, 1999, **Federal Register** (64 FR 71652), OSM suspended the portion of 30 CFR 784.20(a)(3) that required a specific structural condition survey of all EPAct protected structures. We suspended this regulation to make our rules consistent with a decision of the U.S. Court of Appeals for the District of Columbia Circuit [*National Mining Association* v. *Babbitt,* 173 F.3d 906 (1999)]. However, state regulatory authorities have the option of retaining the premining surveys. Pennsylvania has not indicated that it wishes to eliminate the survey requirements. Since there is no federal counterpart and because the survey will provide additional information to the regulatory authority, the Director is approving 25 Pa. Code 89.142a(b) and the related subsections (b)(1)(i)–(v) and (b)(2)(i)–(iii). This section is not inconsistent with the requirements of SMCRA and the federal regulations. The Director does note that Pennsylvania may be required to submit a program amendment to conform with any future federal rules regarding structure surveys.

Section 89.142a(c)(1). This section provides that no underground mining shall be conducted beneath or adjacent to public buildings and facilities, churches, schools and hospitals, impoundments with a storage capacity of 20 acre-feet (2.47 hectare-meters) or more, or bodies of water or aquifers that serve as significant sources to public water supply systems unless the subsidence control plan demonstrates that subsidence will not cause material damage to, or reduce the foreseeable use of, the structures. This provision is similar to section 9.1(c) (52 P.S. 1406.9a(c)) of the BMSLCA that the Director approved. However, there is a difference in the language between Pennsylvania's statute and its regulation. The regulation only restricts underground mining beneath or adjacent to the listed facilities, while the statute restricts underground mining *activities* beneath or adjacent to the listed facilities. This is significant because the federal regulations (as noted in the definition of underground mining activities at 30 CFR 701.5) restrict surface operations incident to underground extraction of coal or in situ processing, such as construction, use, maintenance, and reclamation of roads, above-ground repair areas, storage areas, processing areas, shipping areas, areas upon which are sited support facilities including hoist and ventilating ducts, areas utilized for the disposal and storage of waste, and areas on which materials incident to underground mining operations are placed. The Pennsylvania regulation would restrict only underground mining which is defined in the Pennsylvania regulations

at 25 Pa. Code 89.5 as the extraction of coal in an underground mine.

However, the Director is approving this section of the regulations because the statutory language of section 9.1(c) (52 P.S. 1406.9a(c)) of the BMSLCA is controlling over the conflicting language of the regulation. Accordingly, the Director finds that 25 Pa. Code 89.142a(c)(1), when read in conjunction with section 9.1(c) (52 P.S. 1406.9a(c)) of the BMSLCA, is no less effective than the federal regulations at 30 CFR 817.121(d).

Section 89.142a(c)(2)(i)–(v). This section lists the measures to be adopted by the operator to comply with 25 Pa. Code 89.142a(c)(1). The requirements include limiting the percentage of coal extracted, specifications on the size and configuration of the support area, backfilling or backstowing of voids, leaving areas in which no coal extraction will occur, and initiating a monitoring program to detect surface movement. The Director is approving subsections 89.142a(c)(2)(i) (A)–(D), (ii), (iii), (iv), and (v) because these requirements are substantively the same or no less effective than the federal requirements at 30 CFR 784.20(b)(5).

Section 89.142a(c)(2)(vi). This subsection requires a monitoring program to detect surface movement resulting from underground mining. The monitors are to be placed sufficiently in advance of the underground mining so that it can be stopped before protected structures or features are damaged.

In our letter to Pennsylvania of June 21, 1999, we indicated that this section appears to be less effective than the federal regulations because it does not require monitoring in conformance with 30 CFR 784.20(b)(4) of occupied dwellings, non-commercial structures and surface lands.

In its response of June 1, 2000, Pennsylvania indicated that:

> 30 CFR 784.20(b)(4) provides that an application shall contain a description of the monitoring, if any, needed to determine the extent of subsidence that may occur so that appropriate mitigation measures can be implemented. It does not, as OSM suggests in its comment, ''require'' monitoring. In any event, section 89.142a(c)(2)(vi) was not intended to implement the provisions of § 784.20(b)(4). Instead, section 89.141(d)(7) (which virtually mirrors the federal regulation) is designed to do so. Clearly, section 89.141(d)(7) is as effective as § 784.20(b)(4) in regard to the monitoring of occupied dwellings, noncommercial structures and surface land.

There is no direct counterpart in federal regulations to this section. The Director agrees with Pennsylvania's explanation and is approving this section with regard to the monitoring program because the monitoring required will help operators and Pennsylvania to determine if subsidence is likely to affect protected structures and features and is consistent with the federal regulations in providing protection to those structures or features.

Section 89.142a(c)(3). This subsection states that if the measures implemented by the operator cause material damage or reduce the reasonably foreseeable use of structures or features listed in paragraph (1), the department will impose additional measures to minimize the potential for these effects. In our letter to Pennsylvania dated June 21, 1999, we indicated that the federal rule at 30 CFR 817.121(e) states that if there is material subsidence damage to structures listed in 30 CFR 817.121(d), then the regulatory authority may suspend mining under or adjacent to such structures or facilities until the subsidence control plan is modified to ensure prevention of further material damage. Section 30 CFR 784.20(b)(4) requires the subsidence control plan to contain, ''A description of the monitoring, if any, needed to determine the commencement and degree of subsidence so that, when appropriate, other measures can be taken to prevent, reduce or correct material damage in accordance with § 817.121(c) of this chapter.'' When taken together, the EPAct sections mean that the prevention of material damage (and not ''minimize the potential'') standard is in place. We further indicated to Pennsylvania that this section appears to be less effective than the federal regulations because it does not include the option for Pennsylvania to suspend mining or have the subsidence control plan modified to ensure prevention of further material damage.

In its response to us of June 1, 2000, Pennsylvania indicated that:

> OSM has intertwined various regulatory sections resulting in a misinterpretation of the federal regulations to assert a standard that does not exist and is not supported by the federal regulations. Although the language of section 89.142a(c)(3) differs somewhat from that of 30 CFR 817.121(e), the intended result is the same—increased protection of public buildings, etc. that are susceptible to damage by mine subsidence. Therefore, the Pennsylvania regulation is as effective as the federal regulation. In order for the provisions of section 89.142a(c)(3) to come into play, the measures previously proposed by the operator and approved by DEP must have failed to adequately protect one or more of the structures or features listed in paragraph (c)(1). At that point it is necessary to impose additional restrictions or require additional protective measures to ensure that other protected structures or features will not be materially damaged by subsidence. Since it could be argued that the failed measures were designed to ''prevent material damage,'' a new standard providing greater protection must be targeted. In setting this standard, DEP chose the phrase ''minimize the potential for these effects'' to clarify that new measures must be proposed and that these measures must be sufficient to further reduce the likelihood of effects similar to those observed.

OSM agrees with Pennsylvania that 25 Pa. Code 89.142a(c)(3) and 30 CFR 817.121(e) increase protection of the structures and surface features at 25 Pa. Code 89.142a(c)(1) and 30 CFR 817.121(d), respectively. However, 30 CFR 817.121(e) imposes on the regulatory authority the obligation to require permittees to modify subsidence control plans to ensure the *prevention* of further material damage in the cases where the initial plan or operator's actions fail. In addition, 30 CFR 817.121(e) provides the authority to suspend mining until such a plan is approved. Pennsylvania's response to OSM did not establish that the regulations at 25 Pa. Code 89.142a(c)(3) allow Pennsylvania the discretion to suspend mining until the operator's subsidence control plan ensures the prevention of further material damage. Pennsylvania's regulation merely requires additional measures to *minimize* the effects, but does not give Pennsylvania the option to stop the mining until Pennsylvania reviews the additional measures and determines that the measures will minimize the effects. The Director is requiring Pennsylvania to amend its regulations to address the requirement.

Section 89.142a(d). This section provides that if the Department determines and notifies a mine operator that a proposed mining technique or extraction ratio will result in irreparable damage to a structure in subsection (f)(1)(iii)–(v), the operator may not use the technique or extraction ratio unless the building owner, prior to mining, consents to the mining or the operator, prior to mining, takes measures approved by the Department to minimize or reduce the impacts resulting from subsidence to these structures. The federal regulations at 30 CFR 817.121(a) require that operations, depending on the type, must either prevent or minimize material damage to occupied residential dwellings and community or institutional buildings. The federal regulations do not provide for an irreparable damage standard. As a result, the provisions of this section are no less effective than the federal regulations regarding structures in danger of being irreparably damaged,

but it is less effective in regard to structures that may be materially damaged because it provides no protection for those structures. While this section can be approved for structures in danger of being irreparably damaged, the Director is requiring Pennsylvania to amend its program to insure that structures in danger of being materially damaged are protected also.

Section 89.142a(e). This section requires operators to correct material damage to surface lands resulting from subsidence to the extent technologically and economically feasible. In our letter of June 21, 1999, to Pennsylvania we noted that this section did not require, as 30 CFR 817.121(c)(1) does, the permittee to restore the land ''to a condition capable of maintaining the value and reasonably foreseeable uses that it was capable of supporting before subsidence damage.''

In its response to us of June 1, 2000, Pennsylvania stated that the operator is required to correct material damage as defined by 25 Pa. Code 89.5 and that since the definition of ''material'' includes those components required in 30 CFR 817.121(c)(1), when 25 Pa. Code 89.142a(e) is read in conjunction with 25 Pa. Code 89.5, it is as effective as 30 CFR 817.121(c)(1).

The Director agrees with Pennsylvania's interpretation and is approving this section because when it is read in conjunction with 25 Pa. Code 89.5, it is no less effective than 30 CFR 817.121(c)(1) regarding correction of material damage to surface lands.

Section 89.142a(f)(1). This section requires correction of damage to protected structures from underground mining conducted on or after August 21, 1994. The federal regulations at 30 CFR 817.121(c)(1) and (2) state that the permittee must correct any material damage resulting from *subsidence* caused to surface lands or structures. Pennsylvania's definition of underground mining only relates to extraction of coal, therefore subsidence from other underground mining activities (such as underground construction, operation and reclamation of shafts, adits, underground support facilities, in situ processing, and underground hauling, storage, and blasting) would not be covered. As a result, this portion of the amendment is less inclusive than the federal regulations that require repair of structures damaged by subsidence. The Director is requiring Pennsylvania to amend this section to insure that protected structures damaged by subsidence are repaired. Please see the combined finding regarding use of the term ''underground mining'' as opposed to ''underground mining operations'' at the end of the regulation section for more information.

Additionally, this section is not as effective as 30 CFR 817.121(c), which requires permittees to *promptly* repair or compensate owners for material damage caused by subsidence. Section 89.142a(f)(1) does not contain any standard requiring operators to show a diligent and timely effort in repairing structures or compensating landowners for subsidence damage. For further information on the standard requiring prompt repair or compensation, see the Director's decision on section 5.4 of the BMSLCA. The Director is requiring this section to be amended to be no less effective than 30 CFR 817.121(c) in requiring prompt repair or compensation to landowners.

Section 89.142a(f)(1)(i) and (ii). These sections list the type of structures that operators are responsible for repairing or providing compensation for damages to landowners when underground mining causes subsidence damage. Subsections (i) and (ii) are nearly identical to the statutory sections of 5.4(a)(1) and (a)(2). Therefore, the findings for 5.4(a)(1) and (a)(2) are incorporated herein by reference and the Director is approving subsection (i) and (ii).

Section 89.142a(f)(1)(iii). This section provides for compensation for damage to dwellings that are used for human habitation and permanently affixed appurtenant structures or improvements in place on August 21, 1994, or on the date of first publication of the application for a coal mining activity permit or a 5-year renewal thereof for the operations in question and within the boundary of the entire mine as depicted in the application. This section is similar to section 5.4(a)(3) of the BMSLCA. In section 5.4(a)(3) the Director did not approve the language '' * * * in place on the effective date of this section or on the date of first publication of the application for a Mine Activity Permit or a five-year renewal thereof for the operations in question and within the boundary of the entire mine as depicted in said application.'' For the same reasons, the Director is not approving the language, '' * * * or on the date of first publication of the application for a coal mining activity permit or a 5-year renewal thereof for the operations in question and within the boundary of the entire mine as depicted in the application,'' from 25 Pa. Code 89.142a(f)(1)(iii).

Section 89.142a(f)(1)(iv) and (v). These sections address agricultural structures that are protected under Pennsylvania's program. Pursuant to 30 CFR 817.121(c)(3), repair or compensation for material damage to agricultural structures is required to the extent allowed under state law. The Director is approving these sections because they protect structures not covered under federal regulations and they are consistent with 30 CFR 817.121(c)(3).

Section 89.142a(f)(2)(i). This section provides for compensation to landowners for subsidence damages to structures rather than repair. The federal regulations require the compensation to be in the full amount of the decrease in value of the structure resulting from the subsidence. Pennsylvania's amendment provides that compensation is to be equal to the reasonable cost of repairing the structure or if the structure is determined to be irreparably damaged, the compensation shall be equal to the reasonable cost of its replacement. These standards for compensation are the same as those in 5.4(a) (52 P.S. 1406.5d(a)) of BMSLCA. Therefore, the finding for 5.4(a) (52 P.S. 1406.5d(a)) is incorporated herein by reference and the Director is approving this portion of the regulation.

The Pennsylvania amendment also discusses damage to agricultural structures. Pursuant to 30 CFR 817.121(c)(3), repair or compensation for material damage to agricultural structures is required to the extent allowed under state law. The Director is approving this portion of the amendment because it provides for protection for structures that are not protected under the federal regulations and is consistent with 30 CFR 817.121(c)(3).

However, the Director is requiring this section to be amended because of the use of the term ''underground mining.'' Please see the combined finding regarding use of the term ''underground mining'' as opposed to ''underground mining operations'' at the end of the regulation section for more information.

Section 89.142a(f)(2)(ii). This section provides for operators to compensate occupants of covered structures for payment of reasonable, actual expenses incurred during temporary relocation. The section further provides that the operator shall also compensate the occupants for other actual reasonable incidental costs agreed to by the parties or approved by the Department.

There is no direct federal counterpart for this regulation. This portion of the amendment affords a benefit to occupants of subsidence-damaged structures that goes beyond the protections in the federal regulations. The Director finds that the section is not inconsistent with the requirements of

SMCRA and the federal regulations and is approving it.

Section 89.142a(g)(1). Subsection (1) provides that underground mining must be planned and conducted in a manner that minimizes damage, destruction or disruption in services provided by utilities. Underground mining is defined in Pennsylvania's regulations as the extraction of coal in an underground mine. The federal rule at 30 CFR 817.180 requires that all underground mining *activities,* not just underground mining, must be planned and conducted in a manner that minimizes damage, destruction or disruption in services provided by utilities. The federal definition of underground mining activities is a combination of two parts. The first includes surface operations incident to underground extraction of coal or in situ processing, such as construction, use, maintenance, are reclamation of roads, above-ground repair areas, storage areas, processing areas, shipping areas upon which are sited support facilities including hoist and ventilation ducts, areas utilized for the disposal and storage of waste, and areas on which materials incident to underground mining are placed. The second part includes underground operations such as underground construction, operation and reclamation of shafts, adits, underground support facilities, in situ processing, and underground mining, hauling, storage, and blasting. Thus, the federal rule is more inclusive of the activities that must be conducted in a manner that minimizes damage, destruction or disruption in services.

The Director is approving this section to the extent that underground mining must be planned and conducted in a manner that minimizes damage, destruction or disruption to utilities. However, the Director is requiring Pennsylvania to amend its program to require all underground mining activities be conducted in a manner consistent with 30 CFR 817.180.

Section 89.142a(g)(2). Subsection (2) provides a list of measures an operator may take to minimize damage, destruction or disruption in services from utilities listed in 25 Pa. Code 89.142a(g)(1). There is no direct federal counterpart to this regulation. The Director is approving this section because it lists specific measures operators may implement to insure that utilities can continue to provide their services. These measures are not inconsistent with the requirements of SMCRA and the federal regulations.

Section 89.142a(g)(3). This section provides that a mine owner shall take measures to minimize damage to customer-owned gas and water service connections. In our letter of June 21, 1999, we noted that since customer-owned gas and water service connections are part of a residential dwelling (see definition of ''permanently affixed appurtenant structures'' at 25 Pa. Code 89.5), Pennsylvania should require the prevention of subsidence from causing material damage to the extent feasible for non-planned subsidence and minimize, repair and compensate for planned subsidence.

In its response to us of June 1, 2000, Pennsylvania noted:

> Under Pennsylvania's program a mine operator must either remove enough coal to induce planned subsidence or leave support that will maximize mine stability. If mining will result in planned subsidence, a mine operator is required to take measures to minimize damage to customer-owned gas and water service connections, unless the property owner does not consent to allow the measure to be taken. If mining will not result in planned subsidence, the workings must be designed to remain stable in accordance with section 89.142a(a)(4), thereby precluding material damage that would result from unplanned subsidence.

The Director is approving this portion of the amendment. The federal rule at 30 CFR 817.121 requires the permittee to prevent (to the extent it is technologically and economically feasible) damage when the mining does not result in unplanned subsidence. The federal rule at 30 CFR 817.121(a)(2) requires minimization of subsidence damage for occupied residential dwellings and structures related thereto, which by definition includes utilities. The exception to this minimization requirement is if the permittee has the written consent of the owner. Since 25 Pa. Code 89.142a(a)(4) prohibits material damage whenever there is unplanned subsidence and 25 Pa. Code 89.142a(g)(3) requires an operator to minimize damage to customer utility connections unless the owner prohibits such measures, these sections together protect customer-owned gas and water service connections to the extent required by the federal regulations and are no less effective than the federal regulations.

Section 89.142a(g)(4). This section requires the Department to suspend or restrict underground mining if it determines that mining beneath or adjacent to a utility will present an imminent hazard to human safety. In our letter to Pennsylvania of June 21, 1999, we indicated that the federal rules at 30 CFR 817.121(f) do not have the option of restricting underground mining but provide only for suspension of underground mining activities in imminent hazard situations. While the federal regulations require suspension of underground mining beneath or adjacent to a utility if it presents an imminent hazard to human safety, the Pennsylvania rules would allow the Department to restrict mining in this situation. The term ''restrict'' denotes that mining, in some fashion, could continue. By providing the option to allow mining to continue, this section appears to be less effective than the federal regulations.

In its response to us of June 1, 2000, Pennsylvania indicated that in writing its regulations, PADEP decided to use the term ''restrict'' rather than the term ''suspend'' in describing the appropriate action to be taken when an imminent hazard is recognized. The term ''restrict'' can be applied to limit the percentage of coal extracted where there is a need to prevent subsidence that would, in turn, give rise to a hazardous situation. The term ''restrict'' can also be applied to prevent mining from encroaching into a specified area or delay mining until damage prevention measures are taken at the land surface. By contrast, the term ''suspend,'' as defined by Webster's Dictionary, only seems to imply a temporary cessation of mining. PADEP believes its choice of terms more clearly indicates there must be a final outcome in which there is no imminent hazard to human safety resulting from mining. Irrespective of the term used, PADEP believes that both the Pennsylvania and the federal regulation are applied in the same manner to prevent imminent hazards to human safety.

Based on Pennsylvania's interpretation of the word ''restrict,'' the Director is approving this regulation. In effect, this would give Pennsylvania authority to suspend operations when necessary. In this manner, the Pennsylvania program will be no less effective than the federal program with regard to suspension of operations that could involve imminent harm situations.

Section 89.142a(h)(1) and (2). Section 89.142a(h)(1) formerly appeared at 25 Pa. Code 89.143(d)(1). Section 89.143(d)(1) was deleted by this amendment and its provisions moved, with some modification, to 25 Pa. Code 89.142a(h)(1). The provision read, prior to deletion, ''[U]nderground mining activities shall be planned and conducted in a manner which maintains the value and reasonably foreseeable uses of perennial streams, such as aquatic life, water supply and recreation, as they existed prior to mining beneath streams.'' The provision

at 25 Pa. Code 89.142a(h)(1) deletes the word ''activities'' and changes ''mining beneath streams'' to ''coal extraction beneath streams.''

Section 89.142a(h)(2) formerly appeared at 25 Pa. Code 89.143(d)(3). Section 89.143(d)(3) was deleted by this amendment and its provisions moved, with some modifications, to 25 Pa. Code 89.142a(h)(2). The provision read, prior to deletion, ''[I]f the Department finds that the measures have adversely affected a perennial stream, the operator shall meet the requirements of [section] 89.145(a) (relating to surface owner protection) and file revised plans or other data to demonstrate that future activities will meet the requirements of paragraph (1).'' The section now reads, ''[I]f the Department finds that underground mining has adversely affected a perennial stream, the operator shall mitigate the adverse effects to the extent technologically and economically feasible, and, if necessary, file revised plans or other data to demonstrate that future underground mining will meet the requirements of paragraph (1).'' As can be seen, there are two changes to this section: (1) the revised regulation defines the operator's responsibility to mitigate adverse effects to perennial streams to the extent technologically and economically feasible, and (2) substituting the phrase ''underground mining'' for ''future activities.''

The Director is approving the change in 25 Pa. Code 89.142a(h)(2) regarding the operator's responsibility to mitigate adverse effects to perennial streams. Under federal requirements, perennial streams are a component of surface lands and are regulated relative to planned and unplanned subsidence. See 60 FR at 16725. For unplanned subsidence (30 CFR 784.20(b)(5)), permittees must take measures on the surface to prevent or minimize material damage or diminution in value of the surface. For planned subsidence, material damage does not have to be prevented; however, the permittee must correct any material damage resulting from subsidence caused to surface lands, to the extent technologically and economically feasible, by restoring the land to a condition capable of maintaining the value and reasonably foreseeable uses that it was capable of supporting before subsidence damage (817.121(c)(1)). Since 25 Pa. Code 89.142a(h) requires underground mining to be planned and conducted in a manner that maintains the value and reasonably foreseeable use of perennial streams and for adverse effects to be mitigated to the extent technologically and economically feasible, the Director is approving this portion of the amendment because it is no less effective than the requirements at 30 CFR §§ 784.20(b)(5), 784.20(b)(8) and 817.121(c)(1).

However, the Director is requiring both subsections (h)(1) and (h)(2) to be amended because of the use of the term ''underground mining.'' Please see the combined finding regarding use of the term ''underground mining'' as opposed to ''underground mining operations'' at the end of the regulation section for more information.

Section 89.142a(i). This section provides situations where the Department will suspend underground mining if the operations present an imminent danger to the public. Pennsylvania's regulations are no less stringent than § 516(c) of SMCRA and 30 CFR 817.121(f) since they both require the suspension of underground mining under urbanized areas, cities, towns, and communities and adjacent to industrial or commercial buildings, major impoundments, or perennial streams. In addition, Pennsylvania extends the same protection to lined solid and hazardous waste disposal areas. However, the Director is requiring subsection (1) to be amended because of the use of the term ''underground mining.'' Please see the combined finding regarding use of the term ''underground mining'' as opposed to ''underground mining operations'' at the end of the regulation section for more information.

Section 89.142a(j). This section provides that underground mining is prohibited under an area that is not included within a subsidence control plan that has been submitted and approved by the Department. There is no direct corresponding federal regulation to this section. The Director is approving this portion of the amendment because it is not inconsistent with the federal regulations at 30 CFR 784.20 requiring a subsidence control plan as part of the permit application.

Section 89.142a(k). This section provides the steps operators must take when they receive a claim of subsidence damage to a structure or surface feature. There is no direct corresponding federal counterpart to this section. Since this section establishes procedures for operators to contact the regulatory authority and will insure that any complaints that are received by an operator will be forwarded to the regulatory authority in a timely manner, the Director finds that this section is not inconsistent with the requirements of SMCRA and the federal regulations. The Director is approving this portion of the amendment.

Section 89.142a(l). This section prohibits the Department from adjudicating property rights disputes between mine operators and other parties. Section 507(b)(9) of SMCRA states in part that nothing in SMCRA ''shall be construed as vesting in the regulatory authority the jurisdiction to adjudicate property title disputes.'' The Director finds that this section is in accordance with SMCRA because it does not give PADEP the authority to adjudicate property rights. The Director is approving this section.

Section 89.143(a). This section provided performance standards for operators to follow when conducting underground mining activities. This section has been deleted with provisions (a)(1), (2), and (4) moved, with some minor modifications, to 25 Pa. Code 89.142a(a)(1), (2), and (4) respectively. Section 89.143(a)(3) was modified and moved to 25 Pa. Code 89.142a(a)(3). Section 89.143(a)(3) stated that no underground mining activity will be authorized beneath structures where the depth of overburden is less than 100 feet, with the exception of mine-related openings to the surface such as entries, shafts and boreholes and site specific variances for entry development as approved by the Department. In moving this section, Pennsylvania kept the prohibition of mining beneath structures where the overburden is less than 100 feet, but deleted the exceptions and replaced them with the phrase ''unless the subsidence control plan demonstrates to the Department's satisfaction that the mine workings will be stable and that overlying structures will not suffer irreparable damage.'' The Director is approving the deletion of 25 Pa. Code 89.143 because the requirements of subsections (a)(1), (2), and (4) remain as part of the Pennsylvania program and the modification of subsection (a)(3) as found in 25 Pa. Code 89.142a(a)(3) has been approved. However, the Director is requiring Pennsylvania to amend its program at 25 Pa. Code 89.142a(a) to take into account underground mining operations when describing performance standards for operators to follow.

Section 89.143(b)(1). This section has been deleted with its provisions modified and moved to 25 Pa. Code 89.142a(c)(1). Section 89.143(b)(1) required underground mining activities to be planned and conducted in a manner that prevents subsidence damage to: (i) public buildings and noncommercial structures customarily used by the public, including churches, schools and hospitals, (ii) dwellings, cemeteries, municipal public service

operations and municipal utilities in place on April 27, 1966, (iii) impoundments and other bodies of water with a storage capacity of 20 acre feet or more, (iv) aquifers, perennial streams and bodies of water which serve as a significant source for a public water supply system as defined in the Pennsylvania Safe Drinking Water Act (35 P.S. section 721.1–721.17), and (v) coal refuse disposal areas authorized by permits issued under Chapter 90 (relating to coal refuse disposal).

The section as it was modified and moved to 25 Pa. Code 89.142a(c)(1) now reads, ''Unless the subsidence control plan demonstrates that subsidence will not cause material damage to, or reduce the reasonably foreseeable use of the structures and surface features listed in subparagraphs (i)–(v), no underground mining shall be conducted beneath or adjacent to: (i) Public buildings and facilities, (ii) Churches, schools and hospitals, (iii) Impoundments with a storage capacity of 20 acre-feet (2.47 hectare-meters) or more, (iv) Bodies of water with a volume of 20 acre-feet (2.47 hectare-meters) or more, and (v) Bodies of water or aquifers which serve as significant sources to public water supply systems.'' The Director is approving the deletion of 25 Pa Code 89.143(b)(1) because it provided more comprehensive protections than the federal regulations.

Section 89.143(b)(2). This section was deleted in its entirety. Prior to deletion, this section listed the damages prohibited by this subsection, including the cracking of walls, foundations, and monuments, the draining of aquifers, perennial streams or other bodies of water that serve as a significant source for a public water supply system and the weakening of impoundments and embankments. The section further noted that damage to structures described in paragraph (1)(i) need not be prevented if done with the consent of the current owner. The Director is approving this deletion because under federal rules, such damages may be allowed to occur if the operator promptly repairs or compensates the landowners for the damages or promptly provides alternate water supplies. Deletion of this section will not make the Pennsylvania program less effective than the federal regulations.

Section 89.143(b)(3). This section has been deleted with several of its provisions moved to 25 Pa. Code 89.142a(c)(2). The provisions that were moved, with some minor modifications, were: 25 Pa. Code 89.143(b)(3)(i) (A) through (C). The remaining provisions that were deleted were 25 Pa. Code 89.143(b)(3)(i)(D) and (ii)(A) through (D). Section 89.143(b)(3)(i)(D) provided that more stringent measures may be imposed or mining may be prohibited if the measures fail to prevent subsidence damage. Section (ii) allowed full extraction techniques where the operator demonstrates that the proposed measures are at least as effective in prevention of subsidence damage as those described in this subsection.

The Director is approving the deletion of this section because 25 Pa. Code 89.143(b)(3)(i)(A) through (C) still remain in the approved program and 25 Pa. Code 89.143(b)(3)(i)(D) and (ii)(A) through (D) provided protections beyond that contemplated by the federal regulations. The deletion of 25 Pa. Code 89.143(b)(3) will not make the Pennsylvania program less effective than the federal regulations.

Section 89.143(c)(1). This section has been deleted and the provisions moved to section 25 Pa. Code 89.142a(g)(1). The section discussed protection of utilities and requires underground mining activities to be planned and conducted in a manner that minimizes damage, destruction or disruption in services provided by utilities. When the section was moved to 25 Pa. Code 89.142a(g), Pennsylvania dropped the word ''activities'' from the phrase ''underground mining activities.'' The Director is approving the deletion of 25 Pa. Code 89.143(c)(1), but is requiring Pennsylvania to amend its program at 25 Pa. Code 89.142a(g)(1) to insure that underground mining activities are planned and conducted in a manner that minimizes damage, destruction or disruption in services provided by utilities. See the Director's decision under 25 Pa. Code 89.142a(g)(1) for further information.

Section 89.143(c)(2). This section was deleted and the provisions moved with some modifications to 25 Pa. Code 89.142a(g)(2). The section originally indicated that the measures adopted to minimize damage, destruction or disruption of utility services protected by this subsection may include, in addition to those measures discussed in 25 Pa. Code 89.141(d), a program for detecting subsidence damage and avoiding disruption in services, and a notification to the owner of the facility that specifies when the mining activity beneath or adjacent to the structure will occur. When Pennsylvania moved the section it changed the phrase ''avoiding disruption in services'' to ''minimizing disruption in services'' (see 25 Pa. Code 89.142a(g)(2)(i)). The federal rules at 30 CFR 817.180 require underground mining activities to be conducted in a manner that minimizes damage, destruction, or disruption of services provided by utilities. Therefore, the Director is approving deletion of this section because the provisions appear in 25 Pa. Code 89.142a(g)(2)(i) and (ii) and therefore deleting this section will not make the Pennsylvania program less effective than the federal regulations.

Section 89.143(d)(1). This section was deleted and the provisions moved to 25 Pa. Code 89.142a(h)(1). The provision required, prior to deletion, underground mining activities to be planned and conducted in a manner that maintains the value and reasonably foreseeable uses of perennial streams, such as aquatic life, water supply and recreation, as they existed prior to mining beneath streams. The provision at 25 Pa. Code 89.142a(h)(1) deleted the word ''activities'' and changed ''mining beneath streams'' to ''coal extraction beneath streams.'' The Director has approved the deletion of 25 Pa. Code 89.143(d)(1), but is requiring 25 Pa. Code 89.142a(h)(1) to be amended to be as effective as section 720 of SMCRA regarding underground mining operations.

Section 89.143(d)(2). This section was deleted in its entirety. The section, which dealt with perennial streams, read, ''The measures to be adopted to comply with this subsection shall be described in the application and include a discussion of the effectiveness of the proposed measures as related to prior mining activities under similar conditions.'' There is no federal counterpart to this section. The Director finds that deleting this section will not make the Pennsylvania program less effective than the federal regulations.

Section 89.143(d)(3). This section was deleted and the provisions moved, with some modifications, to 25 Pa. Code 89.142a(h)(2). The provision originally read, ''If the Department finds that the measures have adversely affected a perennial stream, the operator shall meet the requirements of 25 Pa. Code 89.145(a) (relating to surface owner protection) and file revised plans or other data to demonstrate that future activities will meet the requirements of paragraph (1).'' As found in 25 Pa. Code 89.142a(h)(2), the section now reads, ''If the Department finds that the underground mining has adversely affected a perennial stream, the operator shall mitigate the adverse effects to the extent technologically and economically feasible, and, if necessary, file revised plans or other data to demonstrate that future underground mining will meet the requirements of paragraph (1).'' The Director is approving the deletion of 25 Pa. Code 89.143(d)(3), but is requiring 25 Pa. Code 89.142a(h)(2) to be amended to require operators to mitigate

the adverse effects of underground mining operations on perennial streams.

Section 89.143(e). This section requires underground mining activities to be planned and conducted in a manner that maintains the value and reasonably foreseeable use of the overlying surface land prior to mining. This section has been deleted. Pennsylvania has incorporated this provision in the amendment at 25 Pa. Code 89.141(d)(8), which requires the subsidence control plan to contain a description of the measures to be taken to maintain the value and reasonably foreseeable use of the surface land and at 25 Pa. Code 89.142a(e), which requires correction of material damage to surface lands to the extent technologically and economically feasible. The Director is approving deletion of this section because similar provisions that are as effective as the federal regulations in maintaining the value and foreseeable use of surface lands are found elsewhere in the Pennsylvania program.

Section 89.143(f). This section has been deleted and the provisions moved, with some modification, to 25 Pa. Code 89.142a(i)(1). Prior to deletion, this section was titled ''Urbanized areas'' and indicated that underground mining activities shall be suspended beneath urbanized areas, cities, towns and communities, and adjacent to or beneath industrial or commercial buildings, solid and hazardous waste disposal areas, major impoundments or perennial streams, if the activities presented an imminent danger to the inhabitants of the urbanized areas, cities, towns or communities. Section 89.142a(i)(1) now states the Department will suspend underground mining beneath urbanized areas, cities, towns and communities and adjacent to or beneath industrial or commercial buildings, lined solid and hazardous waste disposal areas, major impoundments of 20 acre-feet (2.46 hectare-meters) or more, or perennial streams, if the operations present an imminent danger to the public. The Director finds that Pennsylvania's deletion of 25 Pa. Code 89.143(f) and moving of its provisions to 25 Pa. Code 89.142a(i)(1) did not make this section less effective than the provisions of SMCRA at section 516(c) and is approving the deletion. However, the Director is requiring 25 Pa. Code 89.142a(i)(1) to be amended to provide for the suspension of underground mining operations as per the requirements of 30 CFR 817.121(f).

Section 89.143(g). This section has been deleted and its provisions moved, with some modification, to 25 Pa. Code 89.142a(j). This section provides that underground mining activities are prohibited under an area that is not included within a subsidence control plan submitted under 25 Pa. Code 89.141(d) and that has been approved by the Department. In moving the provision, Pennsylvania deleted the word ''activities'' from the phrase ''underground mining activities.'' The Director finds that deletion of this section does not make the Pennsylvania program any less effective than the federal program because the provisions of the deleted section are found elsewhere in the Pennsylvania program (see the Director's finding at 25 Pa. Code 89.142a(j)).

Section 89.143a(a). This provision requires structure owners with subsidence damage to notify operators of the damage. This provision is similar to section 5.5(a) (52 P.S. 1406.5e(a)) of the BMSLCA. The Director is approving this provision for the same reasons as noted in regard to section 5.5(a) (52 P.S. 1406.5e(a)) of the statute found earlier in this rulemaking.

However the Director is requiring this section to be amended because of the term ''underground mining.'' Please see the combined finding regarding use of the term ''underground mining'' as opposed to ''underground mining operations'' at the end of the regulation section for more information.

Section 89.143a(b). This subsection provides that if the operator agrees that mine subsidence damaged the structure, the operator shall fully repair the damage or compensate the owner for the damage under either 25 Pa. Code 89.142a(f) or under a voluntary agreement authorized by section 5.6 (52 P. S. 1406.5f) of the BMSLCA. Since this subsection requires full repair or compensation and merely cross references to other statutory or regulatory provisions, the Director finds this section no less effective than the federal regulations at 30 CFR 817.121, which require repair or compensation of material damage to structures.

Section 89.143a(c). This section provides that if, within six months of the date that the building owner sent the operator notification of subsidence damage, the parties are unable to agree as to the cause of the damage or the reasonable cost of repair or compensation for the structure, the owner may, within two years of the date damage to the structure occurred, file a claim in writing with the Department.

This section is substantively identical to section 5.5(b) (52 P.S. 1406.5e(b)) of the BMSLCA. Both the statute and the regulation provide that a landowner must wait for six months after notifying an operator of subsidence damage before filing a claim with the Department. Section 5.5(b) (52 P.S. 1406.5e(b)) and the proposed regulation further restricts the period of time for a landowner to file a complaint by requiring complaints to be filed within two years of the date damage occurred to a structure. The Director has not approved the portion of section 5.5(b) (52 P.S. 1406.5e(b)) of the statute that states '' * * * within six months of the date of the notice.'' The reasons for not approving that language can be found under section 5.5(b) (52 P.S. 1406.5e(b)) earlier in this rulemaking. The Director is not approving the portion of the 25 Pa. Code 89.143a(c) that states, ''* * * within 6 months of the date that the building owner sent the operator notification of subsidence damage to the structure * * *'' for the same reasons as noted for section 5.5(b) (52 P.S. 1406.5e(b)) of the statute.

Additionally, the Director has not approved the portion of section 5.5(b) (52 P.S. 1406.5e(b)) of the BMSLCA requiring complaints to be filed within two years of the date damage has occurred to a structure. The Director is not approving the phrase ''within 2 years of the date damage to the structure occurred * * *'' in 25 Pa Code 89.143a(c) for the same reasons as found in section 5.5(b) (52 P.S. 1406.5e(b)) of the statute.

Section 89.143a(d). This section describes the procedures the Department will follow in conducting an investigation into a subsidence damage claim. This regulation is similar to section 5.5(c) (52 P.S. 1406.5e(c)) of the BMSLCA. Both the statute and the regulation require the Department to conduct an investigation within 30 days of receipt the claim and within 60 days of completion of the investigation provide a written response. Additionally, both the statute and regulation provide that, if the Department finds that the operator's underground mining caused the damage, the Department will either issue a written order directing the operator to compensate the structure owner or issue an order directing the operator to repair the damage structure within six months of the date of issuance of the order. More than six months may be allowed if the Department finds that further damage may occur to the same structure as a result of additional subsidence.

The Director approved the portions of section 5.5(c) (52 P.S. 1406.5e(c)) dealing with the time limitations of PADEP's inspection responsibilities. The approval was made to the extent that Pennsylvania recognizes that existing provisions of the Pennsylvania

program regarding responses to citizen complainants could require Pennsylvania to respond to a citizen more quickly than the 60 days allowed in this section. Therefore, the Director is approving 25 Pa. Code 89.143a(d)(1) and (2) to the same extent.

The Director did not approve the provision in 5.5(c) (52 P.S. 1406.5e(c)) of the BMSLCA that allowed written orders with abatement periods of six months or longer to complete repairs or compensate landowners for damages. For the same reasons, the Director is not approving the portion of 25 Pa. Code 89.143a(d)(3) that states, '' * * * within 6 months of the date of issuance of the order. The Department may allow more than 6 months if the Department finds that further damage may occur to the same structure as a result of additional subsidence.''

Finally, the Director is requiring subsections (d)(1) through (3) to be amended because of the use of the term ''underground mining.'' Please see the combined finding regarding use of the term ''underground mining'' as opposed to ''underground mining operations'' at the end of the regulation section for more information.

Section 89.144. This section lists the requirements to notify the landowners of impending underground mining beneath their property. The section was deleted and its provisions moved, with some minor modifications, to 25 Pa. Code 89.155. Because all of the provisions of 25 Pa. Code 89.144 were moved to 25 Pa. Code 89.155, and those provisions were found to be as effective as the federal regulations regarding public notice at 30 CFR 817.122, the Director is approving the deletion of 25 Pa. Code 89.144.

Section 89.144a(a)(1). This provision provides that the operator will not be required to repair a structure or compensate a structure owner for damage to structures if the operator demonstrates that the landowner denied the operator access to the property upon which the structure is located to conduct a premining survey or postmining survey of the structure and surrounding property. This provision is similar to section 5.4(c) (52 P.S. 1406.5d(c)) of the BMSLCA. The Director is not approving this portion of the amendment for the same reasons as given for not approving section 5.4(c) (52 P.S. 1406.5d(c)) of the BMSLCA, as noted earlier in this rulemaking.

Section 89.144a(a)(2). This provision provides that an operator can be granted relief from responsibility to repair a structure or compensate a structure owner for damage to a structure if the operator's underground mining did not cause the damage. The Director is approving this portion of the amendment. There is nothing in the federal regulations requiring operators to compensate owners or repair damage that was not caused by the operator's underground mining activities. Therefore, this provision is not inconsistent with the requirements of SMCRA and the federal regulations.

Section 89.144a(a)(3). This provision provides that an operator can be granted relief from responsibility to repair a structure or compensate a structure owner for damage to a structure if the operator and the landowner entered into a voluntary agreement that satisfies the requirements of section 5.6 (52 P.S. 1406.5f) of the BMSLCA. Section 5.6(a) (52 P.S. 1406.5f(a)) requires agreements to provide for ''remedies [that] shall be no less than those necessary to compensate the owner of a building for the reasonable cost of its repair * * *.'' The Director has approved section 5.6(a) (52 P.S. 1406.5f(a)) of the BMSLCA and is approving 25 Pa. Code 89.144a(a)(3) of the regulations because it is consistent with the federal rules at 30 CFR 817.121, which require permittees to repair damage to structures or compensate the owner.

Section 89.145(a). This section was deleted in its entirety. This section required operators to correct material damage resulting from subsidence to surface lands, including perennial streams, to the extent technologically and economically feasible, by restoring the land to a condition capable of maintaining the value and reasonably foreseeable uses that it was capable of supporting before subsidence. Pennsylvania's program amendment provides for repair of damage to surface lands at 25 Pa. Code 89.142a(e). Please see the discussions of 25 Pa. Code sections 89.142a(e), 89.142a(h), and 89.141(d)(3) for findings on how those sections are no less effective than the federal regulations that require operators to correct material damage to surface lands (including streams) by restoration of the land to a condition capable of maintaining the value and reasonably foreseeable uses that it was capable of supporting before subsidence. The Director is approving the deletion of 25 Pa. Code 89.145(a) because the provisions of that section are covered by 25 Pa. Code section 89.142a(e) and 89.142a(h).

Section 89.145(b). This section was deleted in its entirety. The section required operators to report claims of subsidence damage to PADEP within 10 days of notification. There is no comparable federal standard requiring operators to notify the regulatory authority of subsidence damage claims. Both the BMSLCA at section 5.5 (52 P.S. 1406.5e) and the implementing regulations at 25 Pa. Code 89.143a describe procedures for reporting subsidence damage claims to PADEP. For the Director's findings on reporting, please see the discussions of those sections. Because there is no federal counterpart to 25 Pa. Code 89.145(b), the Director finds that Pennsylvania's deletion of this section does not impair the effectiveness of its program. The deletion is approved.

Section 89.145a(a)(1). This subsection requires operators to conduct premining water surveys prior to mining within 1000 feet of a water supply. In our letter of June 21, 1999, to Pennsylvania we stated that this section contemplates that the premining water survey would be done after the permit is approved while the federal rule at 30 CFR 784.20(a)(3) requires the completion of the survey prior to permit approval. In addition, OSM's February 9, 1998, policy memorandum provides that:

> State program amendments that would delay the timing of the water supply surveys required under 30 CFR 784.20(a)(3) should not be approved.

In the June 21, 1999, letter we also noted that 25 Pa. Code 89.145a(a)(1) provides that survey information is to be submitted only to the ''extent that it can be collected without extraordinary efforts or the expenditure of excessive sums of money'' and that the federal rules do not allow for waiving survey information. Finally, we asked Pennsylvania to clarify whether the information required in subsections 25 Pa. Code 89.145a(a)(1)(i) through (vi) will give sufficient information to determine the premining water quality and quantity. As stated in the federal rules, ''the survey should incorporate the baseline water quality and quantity information on existing water supplies required under existing rules at 30 CFR 784.14 and 784.22.'' 60 FR at 16730 (2d col).

Pennsylvania's response of June 1, 2000, noted that its regulations do not waive the requirement to conduct premining surveys and that, as required by 25 Pa. Code 89.145a(a), all water supplies that may be adversely affected by mining must be surveyed by the mine operator. Pennsylvania advised that the only exception is where the property owner will not allow the mine operator access to conduct the survey and that, fundamentally, there is no difference between the federal and state's regulations in terms of ensuring the availability of baseline data against which to measure effects.

Pennsylvania further noted that the survey requirements of 25 Pa. Code 89.145a(a) are designed around Pennsylvania's water supply replacement requirements, which are more inclusive than federal counterpart requirements, and as a result, Pennsylvania's program must include provisions for surveying water supplies that are installed after the time of permit application. Finally, Pennsylvania advised that its program does not postpone the submission of all water supply information until mining operations have begun. Information relating to the quality and quantity of water supplies is presented at the time of permit application in accordance with the requirements of 25 Pa. Code 89.34(a)(1) relating to groundwater information.

The Director addressed this situation in a memorandum to the Regional Directors dated February 9, 1998, titled ''Timing of Presubsidence Surveys,'' and in March 1999 letters to the Interstate Mining Compact Commission and Tri-State Citizens Mining Network (the ''March 1999 letters''). Guidance from the Director provides that baseline data collected at the time of permit application must be sufficient to develop the Probable Hydrologic Consequences and Cumulative Hydrologic Investigation Assessment documents and that states may use the regulatory program amendment process to identify what additional information required under 30 CFR 784.20(a)(3) must be submitted at the time of permit application and which, if any, could be collected at a time closer to when mining would actually occur. The Director committed to giving serious consideration to approving state program amendments that identify what water supply information required under 30 CFR 784.20(a) must be submitted at the time of permit application and which, if any, could be collected at a time closer to when mining actually occurs. Finally, the Director required that states must demonstrate, through the regulatory program amendment process for any delayed water supply surveys, that those analyses would be completed sufficiently in advance of mining to avoid any adverse effect to the water supply.

OSM considered Pennsylvania's proposed amendment relative to current program requirements for baseline hydrologic surveys, information in the Pennsylvania Bulletin (28 Pa.B. 2761), and responses to OSM requests for clarification relative to the March 1999 letters. Specifically at issue is whether OSM can approve the Pennsylvania requirement that operators conduct premining water surveys after the permit application is approved and prior to mining within 1000 feet of a water supply. The federal rule at 30 CFR 784.20(a)(3) requires a survey at the time of the permit application of each and every protected water supply, i.e. a survey of individual wells, springs, etc. Pennsylvania advised OSM that its amendment proposal does not postpone the submission of all water supply information until after the permit is approved (see the Director's finding at 25 Pa. Code 89.34(a)(1)). The Director notes that the approved Pennsylvania program at 25 Pa. Code 89.43(a)(1) contains requirements for permittees to collect baseline hydrology information in a manner no less effective than the federal requirements at 30 CFR 784.14(b)(1). The federal rules at 30 CFR 784.14 require sampling of ground water information at the time of the permit application, but there is the option to use modeling to meet the requirements for hydrologic prediction. Modeling means that not every water supply will be sampled. Pennsylvania's existing program also allows for modeling. This introduces uncertainty into predicting the type and extent of information that will be collected on each water supply at the time of the permit application. Additionally, the preamble to the Pennsylvania Bulletin stated that 25 Pa. Code 89.145a(a)(1) provides for Department technical staff to adjust the survey distance (1,000 foot limitation) based on site-specific conditions. Accordingly, it is not clear what parameters Pennsylvania would require to be collected on each individual supply as part of a permit application, and which, if any, would be subject to a delayed survey after permit approval.

Based upon the language contained in the Pennsylvania amendment, Pennsylvania's responses to OSM's comments, Pennsylvania's existing program and the Pennsylvania Bulletin, the Director is not approving the provision that allows for water supply surveys to be delayed until mining advances within 1,000 feet of a supply. Such information must be submitted by the permittee with the application. The Director is requiring Pennsylvania to amend its program to require permittees to submit the information required by 25 Pa. Code 89.145a(a)(1)(i)–(vi) that is necessary to meet the provisions of 30 CFR 784.20(a)(3) at the time of the application for all existing drinking, domestic, or residential water supplies. As part of that amendment, Pennsylvania may submit the information requested in the March 1999 letters to identify what water supply information must be submitted at the time of permit application and which, if any, could be collected at a time closer to when mining actually occurs. Along with any such request, Pennsylvania must demonstrate for any delayed water supply surveys, that those analyses would be completed sufficiently in advance of mining to avoid any adverse effect to the water supply.

Pennsylvania further noted that the proviso that survey information need only be acquired to the extent that it can be collected without extraordinary efforts or expenditures of excessive sums of money is a matter of both practicality and preventing inconvenience to property owners. PADEP noted that this proviso was based on its experience and pertains especially to situations where rigid requirements to obtain quantity information would result in tearing apart a well or digging up the floor of a structure to gain access for measurements. Although the federal regulations do not include a similar proviso, PADEP does not believe that OSM would apply them without exercising similar discretion.

The Director is requiring 25 Pa. Code 89.145a(a)(1) to be amended to include the provision that survey information need only be acquired to the extent that it can be collected without extraordinary efforts or expenditures of excessive sums of money is only applicable when it applies to inconveniencing landowners. The federal regulations require the water supply information to be collected without regard to the cost and effort applied by operators. This provision makes this portion of the Pennsylvania program less effective than the federal program, which does not include limits on efforts, or expense, operators are subjected to in the course of gathering premining survey information.

Section 89.145a(a)(1)(i)–(vi). These six subsections list information operators are required to include in the premining survey and, if one is desired, the postmining survey of all water supplies within the permit and adjacent areas. The Director finds these subsections no less effective than the federal rules and is approving the six subsections for the reasons noted below (please also see our finding concerning 25 Pa. Code 89.145a(a)(1)).

The requirement at subsection (i) for the location and type of water supply is consistent with the federal regulations at 30 CFR 784.20(a)(1) requiring the subsidence control map to show the location and type of drinking, domestic,

and residential water supplies that could be contaminated, diminished, or interrupted by subsidence. The Director is approving this section because it is substantially the same as the requirements found at 30 CFR 784.20(a)(1).

Subsection (ii) requires the water supply surveys to include the existing and reasonably foreseeable uses of the water supply. There is no similar provision in the federal regulations. The Director is approving this provision because requiring the operator to gather more information than is required in the federal regulations does not lessen the protections afforded by the federal regulations. Additionally, this information is essential for implementing the provisions of 25 Pa. Code 89.145a(b) and 89.145a(f).

Subsections (iii) and (iv) provide that the surveys include the chemical and physical characteristics of the water and that a certified laboratory must be used to analyze the samples and the quantity of water. These sections require substantially the same information as is required in the federal regulations at 30 CFR 780.21(b)(1). The Director is approving this portion of the amendment because it is consistent with the federal regulations. Subsection (v) requires the survey to include the physical description of the water supply and subsection (vi) requires the survey to include hydrogeologic data such as the static water level and yield determination. The Director is approving subsections (v) and (vi) because they require information similar to the ground water information required by the federal regulations at 30 CFR 780.21(b)(1).

Section 89.145a(a)(2). This provision requires an operator to submit copies of the results of analyses (described under 25 Pa. Code 89.145a(a)(1)) as well as the results of any quantitative analysis to the Department and the landowner within 30 days of their receipt by the operator. Since the federal regulation at 30 CFR 784.20(a)(3) requires the permit applicant to provide copies of any assessment or evaluation to the property owner and the state regulatory authority, the Director finds that this provision is no less effective than 30 CFR 784.20(a)(3).

Section 89.145a(a)(3). This subsection combined with subsection (a)(1) provides that the operator does not have to conduct a premining and postmining survey if the landowner does not authorize access to the site within 10 days of the operator's intent to conduct a survey.

In our letter of June 21, 1999, to Pennsylvania we noted that federal regulations place no notice requirement on the property owner. The 10-day requirement of Pennsylvania's regulations makes it appear to be less effective than the federal regulation because under EPAct, even though access may initially be denied, the property owner can later decide to allow a survey.

In its response to us dated June 1, 2000, Pennsylvania noted that 25 Pa. Code 89.145a(a)(3) is intended to alert PADEP to situations where property owners have denied mine operators access to conduct premining surveys. This allows PADEP to communicate with the property owners to further explain the importance of allowing premining surveys or the procedures to be followed in arranging their own surveys. Section 89.145a(a)(3) does not preclude property owners from changing their minds and subsequently authorizing operators to conduct surveys.

The Director is approving this portion of the proposed amendment based on Pennsylvania's interpretation that there is nothing in the amendment precluding a landowner from requesting a water supply survey after initially denying the operator's access to the property. Therefore, it is no less effective than 30 CFR 784.20 since it does not prevent surveys.

Section 89.145a(b). This provision requires operators to restore or replace affected water supplies with a permanent alternate source that adequately serves the premining uses of the water supply or any foreseeable uses of the water supply. This regulation implements section 5.1(a)(1) and 5.1(a)(2) (52 P.S. 1406.5a(a)(1) and (2)) of the BMSLCA. The Director is approving Pennsylvania's standard regarding the quality of restored or replaced water supplies and is conditionally approving its standard regarding the quantity of restored or replaced water supplies. Please see the discussion at section 5.1(a)(1) and 5.1(a)(2) (52 P.S. 1406.5a(a)(1) and (2)) for more information.

However, this section is less effective than 30 CFR 817.41(j), which requires permittees to *promptly* replace drinking, domestic or residential water supplies. Section 89.145a(b) does not contain any standard requiring operators to show a diligent and timely effort in replacing water supplies. For further information on the standard requiring prompt replacing of water supplies, see the Director's decision on section 5.1(a)(1) (52 P.S. 1406.5a(a)(1)) of the BMSLCA. The Director is requiring 25 Pa. Code 89.145a(b) to be amended to be no less effective than 30 CFR 817.41(j) in requiring prompt replacement of water supplies.

Section 89.145a(c). This section provides that within 24 hours of an operator's receipt of a claim of water supply contamination, diminution or interruption, the operator shall notify the Department of the claim. There is no corresponding federal counterpart to this section. Since this establishes procedures for operators to contact the regulatory authority and will insure that any complaints that are received by an operator will be forwarded to the regulatory authority in a timely manner, the Director finds that this section is not inconsistent with the requirements of SMCRA and the federal regulations.

Section 89.145a(d). This section provides that upon receipt of a complaint that a water supply has been contaminated, diminished or interrupted, operators must diligently investigate the complaint and notify the Department in a timely manner of the results of its investigation. There is no direct federal counterpart. Since this establishes procedures for investigations by operators, the Director finds that this section is not inconsistent with the requirements of SMCRA and the federal regulations.

Section 89.145a(e)(1). This section provides that if an affected water supply is within the rebuttable presumption area and the presumption applies, the operator will provide a temporary water supply within 24 hours. We noted in our letter to Pennsylvania of June 21, 1999, that the proposed amendment only requires the temporary replacement of water supplies if three conditions are met: (1) If the water supply is within the rebuttable presumption area, (2) the presumption applies and, (3) if ''the landowner or water user is without a readily available alternate source.'' The federal rules require the permittee to replace the supply that has been interrupted, etc., regardless of whether there is an available alternate source and where there is no rebuttable presumption. The federal rules do not have a rebuttable presumption standard for water supplies.

In its response of June 1, 2000, Pennsylvania noted that its program

* * * does provide for the provision of temporary water irrespective of whether the affected water supply lies inside or outside of the rebuttable presumption area. The BMSLCA requires the provision of temporary water within 24 hours if the water supply lies within the rebuttable presumption area. This requirement is reflected in section 89.145a(e). If the affected water supply lies outside the rebuttable presumption area, the responsibility to provide temporary water is

driven directly by section 5.2 of BMSLCA. Procedurally, in cases where a water supply has been affected outside the rebuttable presumption area, the law requires DEP to issue an order before an operator is obligated to provide temporary water. For this reason, the responsibility to provide temporary water in cases where the affected water supply lies outside the rebuttable presumption area is not stated in regulation. The requirements of section 89.145a(e) and the provisions of section 5.2 of BMSLCA act together to ensure the provision of temporary water in cases where water supply impacts occur inside and outside of the rebuttable presumption area. It is further notable that throughout its first five years in enforcing the water supply replacement requirements of BMSLCA, DEP has never had to issue an order to compel the provision of temporary water in any case where the affected water supply was outside the rebuttable presumption area.

In regard to the rebuttable presumption of causation, there is no way in which this provision can be interpreted or construed to render Pennsylvania's program any less effective than the federal program. The rebuttable presumption amounts to nothing more than shifting the burden of proof onto the mine operator.

This section is substantively identical to 5.2(a)(2) (52 P.S. 1406.5b(a)(2)) of BMSLCA. Accordingly, the finding for 5.2(a)(2) (52 P.S. 1406.5b(a)(2)) is incorporated herein by reference and the Director is approving this portion of the regulations to the extent the statutory section was approved and is requiring Pennsylvania to submit an amendment requiring the prompt supply of temporary water to all landowners whose water supply has been impacted by underground mining activities.

Section 89.145a(e)(2). This subsection provides that the temporary water supply shall meet the requirements of paragraph (f)(2) and provide a sufficient amount of water to meet the water supply user's premining needs. In our letter of June 21, 1999, to Pennsylvania we noted that the federal definition for ''replacement of water supply'' at 30 CFR 701.5 provides for a ''* * * water supply on both a temporary and permanent basis equivalent to premining quantity and quality.'' We noted that this section appears to be less effective than the federal rules, in that it provides for temporary water based on users' needs rather than the premining quality.

In its response of June 1, 2000, Pennsylvania noted that under its program, a temporary water supply is just that, temporary. It is intended to satisfy the water users' needs so that they can carry out their daily activities with minimal disruption. By contrast, a permanent water supply must be adequate to serve not only the water user's premining needs but also any reasonably foreseeable uses of the original water supply.

Finally Pennsylvania also notes the federal terms ''drinking, domestic or residential water supply'' and ''replacement of water supply'' are defined to include water delivery systems (i.e., the pumps and piping that deliver water to the point of use). As a general observation, these systems are usually designed based on the existing uses of the water supplies. Pennsylvania believes this factor serves to further align its replacement requirements with those of the federal regulations.

The federal definition of the term ''replacement of water supply'' at 30 CFR 701.5 requires the provision of both permanent and temporary water supplies that are the equivalent to the premining quantity and quality. In 25 Pa. Code 89.145a(e)(2), Pennsylvania has indicated that temporary water supplies will be restored to the same quality levels as permanent supplies by requiring that temporary water supplies meet the quality requirements of 25 Pa. Code 89.145a(f)(2). However, Pennsylvania has not required temporary water supplies to meet the same quantity requirements of permanent supplies as defined in 25 Pa. Code 89.145a(f)(3)(i) and (ii), i.e., the amount of water necessary to meet the water user's needs and any reasonably foreseeable uses. Instead, Pennsylvania only requires temporary water supplies to provide a sufficient amount of water necessary to meet the water supply user's premining needs. The Director has conditionally approved 25 Pa. Code 89.145a(f)(3)(i) and (ii), as being as effective as the federal regulations regarding quantity of replacement supplies. Therefore, the Director finds that to be consistent with the federal regulations, 25 Pa. Code 89.145a(e)(2) should require the quantity of temporary water supplies to meet the requirements of 25 Pa. Code 89.145a(f)(3)(i) and (ii). Accordingly, the Director is requiring Pennsylvania to amend this section to insure that temporary water supplies are restored to the same levels as are required of permanent water supplies. Please see the discussion in section 5.1(a)(1) (52 P.S. 1406.5a(a)(1)) for more information on the Director's conditional approval regarding quantity of replacement water supplies.

Section 89.145a(f)(1)(i)—(iv). This section requires that a permanently restored or replaced water supply shall include any well, spring, municipal water supply system or other supply approved by the Department that meets criteria listed in subsections (1)(i) through (iv). Section 89.145a(f)(1) talks about reliability, cost, maintenance and control. Subsection (i) requires the restored or replaced water supply to be as reliable as the previous water supply. Subsection (ii) requires the restored or replaced water supply to be as permanent as the previous water supply and subsection (iii) requires the supply to not require excessive maintenance. Subsection (iv) requires that the supply provide the owner and the user with as much control and accessibility as exercised over the previous water supply. The Director is approving 25 Pa. Code 89.145a(f)(1)(i) through (iv). There are no direct corresponding federal regulations to these sections. The Director finds that these sections are no less effective than the requirements found in the definition of the term ''replacement of water supply'' in the federal regulations at 30 CFR 701.5 because it helps return the water supply to its premining status.

Section 89.145a(f)(1)(v). This subsection provides that a restored or replaced water supply must not result in more than a de minimis cost increase to operate and maintain. The operator must pay for increased operating and maintenance costs that exceed a de minimis cost increase. As noted earlier in this rulemaking (see our finding for 25 Pa. Code 89.5, definition of ''de minimis cost increase''), the Director has not approved a ''de minimis cost increase.'' The Director does not believe that passing any increased costs to operate or maintain replacement water supply systems to landowners will fulfill the intent of the federal regulations to make the landowner whole. Accordingly the Director is not approving 25 Pa. Code 89.145a(f)(1)(v) to the extent that it passes de minimis cost increases to landowners.

Section 89.145a(f)(2). This section provides that a restored or replaced water supply will be deemed adequate when it differs in quality from the premining water supply if it meets the standards of the Pennsylvania Safe Drinking Water Act or is comparable to the premining water supply when that water supply did not meet those standards. This regulation is comparable to section 5.1(a)(2) (52 P.S. 1406.5a(a)(2)) of the BMSLCA. Please see our discussion regarding section 5.1(a)(2) (52 P.S. 1406.5a(a)(2)) for a discussion of the Director's approval regarding quality of replacement water supplies. The Director is approving this section for the same reasons.

Section 89.145a(f)(3)(i). This subsection provides that a restored or replaced water supply will be deemed adequate in quantity if it delivers the

amount of water necessary to satisfy the water user's needs and the demands of any reasonably foreseeable uses. This section of the regulations implements section 5.1(a)(1) (52 P.S. 1406.5a(a)(1) of the BMSLCA. For a complete discussion of the Director's conditional approval of this section, please see the discussion of section 5.1(a)(1) (52 P.S. 1406.5a(a)(1)). The Director's findings are incorporated herein and this section is approved to the extent that section 5.1(a)(1) (52 P.S. 1406.5a(a)(1)) is approved.

Section 89.145a(f)(3)(ii). This subsection provides that a restored or replaced water supply will be adequate in quantity if it is established through a connection to a public water supply system that is capable of delivering the amount of water necessary to satisfy the water user's needs and the demands of any reasonable foreseeable uses.

The Director is conditionally approving this portion of the amendment. For more information on the Director's conditional approval of this section, please see the discussion of section 5.1(a)(1) (52 P.S. 1406.5a(a)(1)) of the BMSLCA under the statute section.

Section 89.145a(f)(3)(iii). This subsection defines the term ''reasonably foreseeable uses with respect to agricultural water supplies'' to include the reasonable expansion of use where the water supply available prior to mining exceeded the farmer's actual use.

The Director is approving this portion of the amendment. For more information on the Director's approval of this section, please see the discussion of section 5.1(a)(1) (52 P.S. 1406.5a(a)(1)) of the BMSLCA under the statute section.

Section 89.145a(f)(4). This section of the regulations provides that replacement of a water supply shall include the installation of any piping, pumping equipment and treatment equipment necessary to put the replaced water source into service. The Director is approving this portion of the regulations. This section is no less effective than the requirements found in definition of the term ''drinking, domestic, or residential water supply'' in the federal regulations at 30 CFR 701.5. This definition provides that the drinking, domestic, or residential water supply includes appurtenant delivery systems. This portion of Pennsylvania's regulations specifies the type of equipment that would be included in appurtenant delivery systems and therefore is consistent with the federal definition and is approved. For more information on standards for delivery systems, please see the Director's findings for section 5.1(a)(1) (52 P.S. 1406.5a(a)(1)) of the BMSLCA.

Section 89.146a(a). This section provides the procedures to be used for landowners or water supply users to secure resolution of water supply damage claims. Subsection (a) requires landowners to notify mine operators when they experience contamination, diminution or interruption of a water supply. The requirement for landowners to contact operators is also found in section 5.2(a)(1) of the BMSLCA. The Director has approved that requirement for the reasons noted in the discussion of section 5.2(a)(1). The Director is approving 25 Pa. Code 89.146a(a) for the same reasons.

Section 89.146a(b). This section provides that the Department will order the operator to provide temporary water to the landowner or water supply user within 24 hours of issuance of the order if: (1) No alternate temporary water supply is available to the landowner or water user, (2) the water supply is contaminated, diminished or interrupted, (3) the water supply is located within the rebuttable presumption area and, (4) the owner notified the operator of the water supply problem. These requirements are similar to those found in section 5.2(a)(1) through (3) of the BMSLCA. The Director is approving 25 Pa. Code 89.146a(b)(1) through (4). The requirement to provide temporary water within 24 hours is within guidelines proposed by OSM in the preamble to the federal regulations (60 FR 16727) and is consistent with the federal definition of ''replacement of water supply'' at 30 CFR 701.5, which requires replacement of protected water supplies on a temporary basis. It is also consistent with the enforcement procedures found in Part 843 of the federal regulations since a failure by the operator to replace the water supply as required under 25 Pa. Code 89.145a(e) is a violation of a performance standard.

Section 89.146a(b)(1), which limits PADEP's ability to issue an order requiring operators to provide temporary water within 24 hours of issuance of an order if an alternate temporary source is available to landowners, is approved based on an explanation provided by Pennsylvania. In its June 1, 2000, response to our June 21, 1999, letter regarding the same subject covered in section 89.145a(e), Pennsylvania noted that, ''[PA]DEP does not interpret subsection (1) as imposing any responsibilities on property owners. If plumbing connections are required to establish a temporary water service, they must be provided by the mine operator. [T]he regulation simply provides that if an alternate source exists and the property owner can put it into service with no more than the flip of a switch or a turn of a valve, the mine operator may be relieved of the responsibility to do any thing more in the way of providing temporary water.'' Since the federal rules do not allow additional costs or burdens to be placed on the water user, the Director finds Pennsylvania's explanation consistent with the federal rules and as previously stated, finds this section is no less effective than the federal regulations in securing temporary water for landowners.

Section 89.146a(b)(4) is similar to section 5.2(a)(1) of the BMSLCA, which also requires landowners to notify operators of water supply problems. The Director is approving 25 Pa. Code 89.146a(b)(4) for the same reasons as section 5.2(a)(1) was approved.

Section 89.146a(c). Section 89.146a(c) provides that a landowner or water user may notify the Department and request an investigation if an alternate water supply has not been provided or if the alternate source is later discontinued. This section is similar to section 5.2(b)(1) of the BMSLCA. The Director has approved section 5.2(b)(1) and for the same reasons is approving 25 Pa. Code 89.146a(c).

The procedures for securing an investigation are provided in 25 Pa. Code 89.146a(c) (1) through (3). These subsections are similar to section 5.2(b)(2) (52 P.S. 1406.5b(b)(2)) of the BMSLCA. The Director is approving section 5.2(b)(2) to the extent that Pennsylvania recognizes that the approved program may require a more timely response to complaints than that allowed by that section. The Director is approving 25 Pa. Code 89.146a(c)(1) through (3) to the same extent and with the same requirements as section 5.2(b)(2).

Section 89.152(a)(1). This section provides the circumstances under which an operator may be relieved from liability from water supply replacement. Subsection (1) provides that an operator will not be required to restore or replace a water supply if the contamination, diminution or interruption existed prior to the underground mining activities and the mining activities did not worsen the preexisting condition. The Director is approving this portion of the amendment. The federal regulations at 817.41(j) do not require replacement of water supplies unless contamination, diminution or interruption due to mining activities has occurred, therefore, 25 Pa. Code 89.152(a)(1) is consistent with the federal rules.

Section 89.152(a)(2). This section provides that the operator is not required to restore or replace a water supply if the operator can demonstrate that the contamination, diminution or interruption is due to underground mining activities that occurred more than three years prior to the onset of the water supply contamination, diminution or interruption. This subsection is similar to section 5.2(e)(2) of the BMSLCA. The Director did not approve 5.2(e)(2) because the statute of limitations provision virtually assures that at some point in time, there will be a water supply that will not be restored or replaced because the landowner did not report the contamination, diminution or interruption within the noted time frame. Further discussion on the Director's decision to not approve section 5.2(e)(2) of the BMSLCA can be found earlier in this rulemaking. The Director is not approving this section of the regulations for the same reasons.

Section 89.152(a)(3). This section provides that the operator will not be required to restore or replace a water supply if the contamination, diminution or interruption occurred as the result of some cause other than the underground mining activities. This section of the regulations is similar to the provisions of section 5.2(e)(3) of the BMSLCA. The Director's approval of 5.2(e)(3) can be found earlier in this rulemaking. The Director is approving this section for the same reasons.

Section 89.152(a)(4). This section provides that the operator will not be required to restore or replace a water supply if the claim for contamination, diminution or interruption of the water supply was made more than two years after the water supply was adversely affected by the underground mining activities. This section is similar to section 5.1(b) of the BMSLCA. The Director has not approved section 5.1(b) for the reasons found in the discussion of that section earlier in this rulemaking. The Director is not approving 25 Pa. Code 89.152(a)(4) of the regulations for the same reasons.

Section 89.152(a)(5)(i). This section provides that the operator will not be required to restore or replace a water supply if the operator has purchased the property for a sum equal to the property's fair market value immediately prior to the time the water supply was affected or has made a one-time payment equal to the difference between the property's fair market value prior to the time the water supply was affected and the fair market value determined at the time the payment is made. This section is similar to the provisions of section 5.2(g)(1) and (2) of the BMSLCA. The Director has not approved 5.2(g)(1) and (2) because the federal program does not provide for compensation in lieu of replacement or restoration of water supplies. A complete discussion of the reasons for not approving sections 5.2(g)(1) and (2) can be found earlier in this rulemaking. The Director is not approving 25 Pa. Code 89.152(a)(5)(i) of the regulations for the same reasons.

Section 89.152(a)(5)(ii). This section provides that the operator will not be required to restore or replace a water supply if the landowner and operator have entered into a valid voluntary agreement under section 5.3 of the BMSLCA. This section is similar to a portion of section 5.3(a) of the BMSLCA. We did not approve that portion of section 5.3(a) that allowed compensation in lieu of restoration or replacement of affected water supplies. As the Director previously noted, OSM's policy as set forth in the preamble to the federal EPAct rules, is to require restoration or replacement. The federal rules do not allow operators and landowners to enter into voluntary agreements in lieu of restoration or replacement of affected water supplies. The full discussion of the Director's reasons for not approving a part of section 5.3 of the BMSLCA can be found in the discussion of that section earlier in this rulemaking. Section 89.152(a)(5)(ii) is not approved for the same reasons.

Section 89.152(b). This subsection states that the section does not apply to underground mining activities that are governed by Chapter 87 (relating to surface mining of coal). In our letter of June 21, 1999, to Pennsylvania, we noted that the preamble to the federal definition of ''replacement of water supply'' states that the ''definition is applicable to both underground coal mining operations and surface mining operations that affect water supplies.'' The preamble to the federal rules indicates that, ''The final rule is intended to apply to replacement of water supply under both sections 717(b) and 720(a)(2) of SMCRA.'' 60 FR at 16726. We asked Pennsylvania to clarify how the Pennsylvania program meets the federal regulations in protecting water supplies affected by both underground and surface mining operations.

In its reply of June 1, 2000, Pennsylvania noted:

> [The] water supply replacement requirements originate in two different statutes. In cases where impacts are due to operations carried out below the surface in the workings of an underground mine, replacement requirements are driven by BMSLCA. In cases where impacts are due to activities at the land surface (i.e., surface mines, surface sites associated with underground mines, coal preparation plants and coal refuse disposal areas), requirements are driven by SMCRA. While replacement requirements are similar under both BMSLCA and SMCRA, there are subtle differences that demand separate treatment. For example, BMSLCA includes a rebuttable presumption provision that is defined by an angular projection from underground mine workings, whereas, the rebuttable presumption provision of SMCRA is defined by a horizontal projection from the area where activities take place at the surface. Due to these differences, effects resulting from surface operations at an underground mine must be treated separately from effects resulting from underground operations. In deciding the appropriate treatment, DEP first decides whether effects are due to activities at a surface site or activities in the underground mine workings. If the effects are due to operations in the underground workings, DEP applies the replacement requirements of 25 Pa Code 89.145a. If the effects are due to operations at a surface activity site, DEP applies the replacement requirements in section 87.119 or section 88.107.

There is no direct federal counterpart. The federal regulations at 30 CFR 817.41(j) require the permittee to replace any affected water supply that is affected by underground mining activities. The federal definition of ''underground mining activities'' at 30 CFR 701.5 includes surface operations incident to underground coal extraction and underground operations. Section 89.152(b) merely delineates which parts of the Pennsylvania program address the various underground mining activities. Accordingly, it is not inconsistent with the requirements of SMCRA and the federal regulations. The Director notes that Pennsylvania's program amendment regarding water supply replacement provisions of surface mines, including surface operations incident to underground coal extraction, has not yet been approved by OSM.

Section 89.153(a) and (b). This section deals with the relationship between a rebuttable presumption and water supply replacement. The provisions of subsections (a) and (b) are substantively identical to the provisions of section 5.2(c) of the BMSLCA. As we stated previously, there is no federal regulation that prohibits the state from enacting a rebuttable presumption for water supply replacement. In fact, by finding that operators are presumed responsible for replacement of water supplies, these regulations will assist in insuring that operators are promptly informed of their obligation to replace affected supplies and provide emergency and temporary water

promptly. Thus, the Director finds that these sections are in accordance with section 720(a)(2) of SMCRA, which requires the prompt replacement of a protected water supply.

Section 89.153(c). This subsection provides that affirmatively proving that an operator was denied access to conduct a premining or postmining survey of a water supply does not relieve the operator of liability for the contamination, diminution or interruption when the landowner, affected water user or the Department proves the operator's underground mining activities caused the contamination, diminution or interruption. There is no direct counterpart to this section in the federal regulations. However, this section is not inconsistent with the requirements of SMCRA and the federal regulations because it does not eliminate an operator's responsibility and it is not inconsistent with enforcement actions where the regulatory authority has the initial burden of going forward with evidence. Therefore, the Director is approving this section.

Section 89.154. This section describes the type and make up of maps to be submitted with the permit application. Subsection (a) describes the general mine map and the elements that are required to be incorporated into the map. Numerous provisions of this section were moved from 25 Pa. Code 89.142, which was previously approved by OSM. Specifically, 25 Pa. Code 89.142(a)(1) through (5) were moved to 25 Pa. Code 89.154. The Director is approving the subsections since they were previously approved by OSM and the federal rules have not changed since that approval.

Section 89.142(a)(6) was also moved to 25 Pa. Code 89.154, with the exception of the deletion of references in subsections (6)(ii) and (iii) to buildings in place as of April 27, 1966, and the deletion of the reference to cemeteries in place as of April 27, 1966, in subsection (6)(iii). These references were deleted in PADEP's rulemaking of May 10, 1997 (27 Pa.B. 2371) that was made in response to Act 54's deletion of protection to structures in place as of April 27, 1966. The May 10, 1997, rulemaking that modified subsections (6)(ii) and (iii) was not submitted to OSM for approval prior to the current amendment. The Director is approving the deletion of 25 Pa. Code 89.154 because the deletion of references to April 27, 1966, provides protections no less effective than those found in the federal regulations. The deletion will not make Pennsylvania's program less effective than the federal program.

In addition, several provisions not previously found in 25 Pa. Code 89.142 were added to 25 Pa. Code 89.154. These include 25 Pa. Code 89.154(6)(iii), (x), (xi), (xix). Section 89.154(a)(6)(iii) requires maps to contain structures or classes of structures listed in 25 Pa. Code 89.142a(f)(1)(i)–(v). Section 89.154(a)(6)(x) requires maps to depict oil, gas and coal slurry pipelines larger than 4 inches in diameter. Section 89.154(a)(6)(xi) requires maps to depict water and sewer main and transmission lines. Section 89.154(a)(6)(xix) requires maps to depict proposed underground workings, including a description of the location and extent of the areas in which planned subsidence mining methods will be used and the identification of all areas where measures will be taken to prevent or minimize subsidence and subsidence-related damage.

The Director is approving these various subsections. The federal rule at 30 CFR 784.20(a)(1) requires a map of the permit and adjacent area showing the location and type of structures, lands and water supplies that could be affected by subsidence. The Pennsylvania rules list such items, therefore they are no less effective than the federal requirements for maps found in 30 CFR 784.20(a)(1). In addition, Pennsylvania's mapping requirements include items which are required under 30 CFR sections 783.24(c), 783.25(a)(1), 783.25(a)(4) and 783.25(a)(5) and are no less effective than these federal regulations.

In our letter of June 21, 1999, to Pennsylvania, we noted that this subsection does not contain a requirement that the general mine map include renewable resource lands or drinking or domestic or residential water supplies as is required by 30 CFR 784.20(a)(1).

In its response to us of June 1, 2000, Pennsylvania noted that:

> Section 89.154(a) does require the *General Mine Map* to include *water supplies* (see subparagraph (6)(vii)). The definition of *water supply* under 25 Pa Code 89.5 includes domestic water supplies and virtually all other types of developed water supplies commonly found in the bituminous coal fields. There is also a general requirement to show all water wells under subparagraph (6)(xiv). These requirements would include all water supplies within the scope of the federal term, ''drinking, domestic or residential water supply.''
>
> Although section 89.154(a) does not include an explicit requirement to show *renewable resource lands* on the map, it does include requirements to map most elements that fall within the scope of the term, *renewable resource lands.* First of all, the *General Mine Map* must include the entire surface area above the proposed mine and additional area beyond the mine boundaries where structures may be damaged and surface lands may suffer material damage. This area would include all *renewable resource lands* that exist above or adjacent to the proposed mine. It would include the recharge area of aquifers that lie above and adjacent to the mine plan. It would also include areas where agricultural operations take place.

The federal definition of ''renewable resource lands'' found at 30 CFR 701.5 means aquifers and areas for the recharge of aquifers and other underground waters as well as areas for agricultural or silvicultural production, production of food and fiber, and grazing lands. The Director accepts Pennsylvania's position that 25 Pa. Code 89.154 will require the requisite information on aquifers and areas for agricultural production and is approving this section.

Section 89.154(b). This section requires mine maps to be submitted to the Department every six months and also gives the requirements for the objects that are to be included on the maps. There is no federal counterpart to this section. The Director finds that this section is not inconsistent with the requirements of SMCRA and the federal regulations because it will not limit protection to landowners and water users and will allow them to monitor the progress of underground mining operations. The Director is approving this section.

Section 89.154(c). This section requires the six-month maps to be filed with the recorder of deeds for each county in which underground mining is projected and proof of filing to be submitted to the Department. There is no federal counterpart to this section. The Director finds that this section is not inconsistent with the requirements of SMCRA and the federal regulations because it will not limit protection to landowners and water users and will assure the progress maps are available to the public. The Director is approving this section.

Section 89.154(d). This section provides that no underground mining may occur until it is shown as projected mining on the maps required by subsection (b) and the maps have been on file with the recorder of deeds office for 10 days. There is no federal counterpart to this section. The Director finds that this section is not inconsistent with the requirements of SMCRA and the federal regulations because it will not limit protection to landowners and water users and will assure mining maps delineating mining progress are

available for inspection. The Director is approving this section.

Section 89.155. This section provides for public notice to property owners, utilities, and political subdivisions at least six months, but less than five years, prior to mining beneath the property. It also requires that the notice identify the area where underground mining will occur, the time frames for mining, the location where the maps and applications (which includes the subsidence control plan) may be inspected, and where the owners can submit complaints. These requirements are essentially the same as the requirements of the federal regulations at 30 CFR 817.122. The federal rules require at least six months notice to all owners and occupants. The notice must include the areas to be mined, the time frames and the location where the subsidence control plan may be examined. The Director is approving this public notice portion of the regulation because it is no less effective than the federal regulations at 30 CFR 817.122. However, the Director is requiring this section to be amended because of the use of the term ''underground mining.'' Please see the combined finding regarding use of the term ''underground mining'' as opposed to ''underground mining operations'' at the end of the regulation section for more information.

Sections 89.141(d), 89.141(d)(9), 89.142a(a), 89.142a(f)(1), 89.142a(f)(2)(i), 89.142a(h)(1), 89.142a(h)(2), 89.142a(i)(1), 89.143a(a), 89.143a(d)(1), 89.143a(d)(2), 89.143a(d)(3), 89.155(b)(1) and (2), and 89.155(c). The Director has found that these sections of 25 Pa. Code Chapter 89 are less stringent than section 720(a) of SMCRA because of their reference to underground mining. These sections require a description of the impacts of underground mining on surface features, structures and facilities and provide performance standards to remedy those impacts. Section 720(a) of SMCRA requires underground coal mining *operations* to comply with those requirements. The term ''underground coal mining operations'' is more expansive than Pennsylvania's definition of underground mining, which is defined at 25 Pa. Code 89.5 to be the extraction of coal. The federal definition of underground coal mining activities describes underground operations as underground construction, operation and reclamation of shafts, adits, underground support facilities, in situ processing, and underground mining, hauling, storage and blasting. Thus, under Pennsylvania's proposed sections, the only activity that must meet the environmental requirements of Chapter 89 is coal extraction, while under SMCRA, all underground operations must meet the environmental requirements. The Director is requiring the above noted sections of 25 Pa. Code to be amended to be no less stringent than section 720(a) of SMCRA.

Summary Table

The table below summarizes the Director's findings with regard to each section of 25 Pa. Code Chapter 89.

Sections of the regulations under 25 Pa. Code Chapter 89 that are approved	Sections of the regulations under 25 Pa. Code Chapter 89 that are conditionally approved or are required to be amended	Sections of the regulations under 25 Pa. Code Chapter 89 that are not approved in whole or in part
Section 89.5, the definitions of the following terms: ''dwelling,'' ''irreparable damage,'' ''material damage,'' ''noncommercial building,'' ''public buildings and facilities,'' ''public water supply system,'' ''rebuttable presumption area,'' ''underground mining,'' ''underground mining operations,'' ''water supply''.	89.141(d), (d)(3), (6), and (9)	89.5, the definitions of the following terms: ''de minimis cost increase,'' ''fair market value,'' ''permanently affixed appurtenant structures''.
89.33	89.142a(a)	89.142a(f)(1)(iii).
89.34	89.142a(c)(3)	89.143a(c).
89.35	89.142a(d)	89.143a(d)(3).
89.36	89.142a(f)(1)	89.144a(a)(1).
89.67	89.142a(f)(2)(i)	89.145a(a)(1).
89.141(a)	89.142a(g)(1)	89.145a(f)(1)(v).
89.141(d)(2), (d)(4), (d)(5), (d)(7), (d)(8), (d)(10) and (d)(11)	89.142a(h)(1) and (2)	89.152(a)(2) and (4).
Deletion of 89.142	89.142a(i)(1)	89.152(a)(5)(i) and (ii).
89.142a(a)(1), (2), (3) and (4)	89.143a(a)	
89.142a(b)	89.143a(d)(1) and (2)	
89.142a(c)(1) and (2)(i)–(vi)	89.145a(b)	
89.142a(e)	89.145a(e)(1) and (2)	
89.142a(f)(1)(i), (ii), (iv), and (v)	89.145a(f)(3)(i) and (ii)	
89.142a(f)(2)(ii)	89.146a(c)	
89.142a(g)(2), (3), and (4)	89.155(b)(1) and (2), and (c)	
89.142a(i)(2), (j), (k), and (l)		
Deletion of 89.143(a) through (g)		
89.143a(b)		
Deletion of 89.144		
89.144a(a)(2), and (3)		
Deletion of 89.145(a) and (b)		
89.145a(a)(1)(i)–(vi)		
89.145a(a)(2) and (3)		
89.145a(c)		
89.145a(d)		
89.145a(f)(1)(i)–(iv)		
89.145a(f)(2)		
89.145a(f)(3)(iii)		

Sections of the regulations under 25 Pa. Code Chapter 89 that are approved	Sections of the regulations under 25 Pa. Code Chapter 89 that are conditionally approved or are required to be amended	Sections of the regulations under 25 Pa. Code Chapter 89 that are not approved in whole or in part
89.145a(f)(4) 89.146a(a), and (b) 89.152(a)(1) and (3) 89.152(b) 89.153 (a) through (c) 89.154(a) through (d) 89.155(a), (b)(3) and (4)		

IV. Summary and Disposition of Comments

Federal Agency Comments

On August 5, 1998, we asked for comments from various federal agencies that may have an interest in the Pennsylvania amendment (Administrative Record Number PA 841.08). We solicited comments in accordance with section 503(b) of SMCRA and 30 CFR 732.17(h)(11)(i) of the federal regulations.

The U.S. Department of Labor, Mine Safety and Health Administration, Coal Mine Safety and Health, Districts 1 and 2 indicated it had no comments on the proposed amendment.

The U.S. Fish and Wildlife Service (FWS) submitted comments regarding several areas. The first comments were concerned with endangered species. FWS pointed out that Pennsylvania's regulations at 25 Pa. Code, Chapter 89, Subchapters A, D, E, F, and G do not mention endangered species protection. FWS goes on to say that the provision in Subchapter C, section 89.82(e) appears to be less protective than the federal requirement found in 30 CFR 773.15(c) and appears to apply only to reclamation activities. FWS also described the requirements for protection of endangered species found in Subchapter B, section 86.37. FWS concludes its comments on endangered species by indicating it is unclear whether the provisions of Chapter 86.37(a)(15) apply to all portions of Chapter 89, including the less protective section 89.82(e). OSM did not find these comments to be relevant to the amendment submitted by Pennsylvania. Pennsylvania is requesting to change its program to deal with subsidence damage to structures and water supplies. The portions of Chapter 89 dealing with endangered species were not part of the amendment Pennsylvania submitted for approval. Neither section 86.37 nor section 89.82 were requested to be changed by Pennsylvania in this rulemaking. These sections are part of Pennsylvania's approved program and as such it would be inappropriate for OSM to comment on them in the context of the current rulemaking.

FWS also submitted comments regarding streams. FWS noted that Pennsylvania limits subsidence protection for streams to perennial streams, which is a limitation not found in the federal program. FWS asserts that there is no similar limitation in the federal program, which generally protects ''streams'' or ''intermittent and perennial'' streams. Presumably, FWS's assertion that Pennsylvania's program provides lesser protection to intermittent and perennial streams was made relative to full extraction mining and on the basis that proposed sections 89.141(d)(9) and (10) under subsidence control application requirements only mention perennial streams.

Two points are relevant to address the FWS's concern. First, the above referenced requirements were previously included in the approved Pennsylvania program. More specifically, sections 89.141(d)(9) and (10) were previously addressed in the approved program under old section 89.141(d)(2). Old section 89.141(d)(2) required a discussion of perennial streams based on 89.143(d) and 89.143(b)(1)(iv), respectively, and addressed the specific topics found at the new 89.141(d)(9) and (10).

Second, the Pennsylvania program requires the same level of subsidence damage prevention and mitigation for streams (perennial and intermittent) that is required under the federal requirements. Federal requirements address full extraction mining impacts to surface lands through a material damage standard. As noted in the preamble to the 1995 federal EPAct rules, ''[T]he definition of ''material damage'' covers damage to the surface and to surface features, such as wetlands, streams, and bodies of water * * *'' (60 FR 16724). Under 30 CFR 784.20(b)(8), the permit subsidence control plan must contain a description of the measures to be taken to mitigate any subsidence-related material damage to the land. In addition, under 30 CFR 817.121(c)(1), the permittee must correct any material damage resulting from subsidence caused to surface lands, to the extent technologically and economically feasible, by restoring the land to a condition capable of maintaining the value and reasonably foreseeable uses that it was capable of supporting before subsidence damage.

With regard to Pennsylvania requirements, even prior to the proposed amendment, the approved program required the protection of surface lands (including perennial and intermittent streams) in a manner no less effective than federal standards. More specifically, old section 89.141(d)(2) and subsection (d)(2)(iii) required a description of the measures (both underground and on the surface) taken to prevent, minimize or avoid subsidence from causing damage or lessening the value or reasonably foreseeable use of the surface land. Old performance standards sections 89.143(e) and 89.145(a) required operators to maintain the value and reasonably foreseeable use of surface lands and to correct material damage to surface lands to the extent technologically and economically feasible by restoring the land to a condition capable of maintaining the value or reasonably foreseeable use. The proposed Pennsylvania amendment did not alter that level of protection. Under sections 89.141(d)(8) and 89.142a(e), Pennsylvania still requires operators to provide a description of the measures to be taken to maximize mine stability and maintain the value and reasonably foreseeable use of the surface land, and when damaged by subsidence, to correct material damage to surface lands to the extent technologically and economically feasible. In conclusion, OSM does not agree with FWS that Pennsylvania limits subsidence protection to perennial streams. Rather, Pennsylvania's regulations have in the past and will continue to after this approval, contain more specific language aimed at addressing basic federal requirements for the protection of those streams identified as perennial in nature.

FWS also commented that Pennsylvania has reduced stream

protection in Chapter 89 by revising the definition of a perennial stream. While FWS admits the definition of a perennial stream in Chapter 89 closely matches the federal definition of perennial streams found in 30 CFR 701.5, it notes that Pennsylvania's implementing technical guidance document is not adequate. The technical document (TGD 563–2000–655) provides a methodology for proving a stream is not perennial that is not biology based, which could lead to a failure to protect many stream systems. FWS also questioned implementation of technical guidance document TGD 563–2000–655 with regard to evaluating restrictions on mining near streams. In this case FWS asked OSM to conduct a random sampling of streams undermined to evaluate the ability of the TGD to predict subsidence effects on streams before OSM accepts the TGD as part of Pennsylvania's program amendments. Finally FWS indicated TGD 563–2000–655 is inconsistent with SMCRA and the Clean Water Act because it does not adequately address aquatic life issues.

Pennsylvania did not amend its definition of ''perennial stream'' in this rulemaking. Also Pennsylvania did not submit technical document (TGD 563–2000–655) as part of this program amendment. As a result, OSM did not review it in conjunction with the amendment. Since the definition and the technical document are outside the scope of the amendment, OSM is not required to respond to this comment.

Environmental Protection Agency (EPA)

Pursuant to 30 CFR 732.17(h)(11)(i) and (ii), OSM is required to solicit comments and obtain the written concurrence of the EPA with respect to those provisions of the proposed program amendment that relate to air or water quality standards promulgated under the authority of the Clean Water Act (33 U.S.C. 1251 *et seq.*) or the Clean Air Act (42 U.S.C. 7401 *et seq.*). By letter dated August 5, 1998, we requested comments and concurrence from EPA on the Commonwealth's proposed amendment of the BMSLCA and implementing regulations (Administrative Record Number PA 841.08). EPA responded on April 26, 2001 (Administrative Record Number PA 841.07), that it had no objections or specific comments on the proposed amendments. However, EPA did wish to convey its concerns about the impact of longwall mining operations on streams and noted that it supports continued evaluation of the extent of impacts and the development of solutions for preventing, minimizing, or mitigating objectionable impacts.

OSM solicited, but did not receive, comments from the Advisory Council on Historic Preservation, and the U.S. Department of Agriculture, Soil Conservation Service.

State Agency Comments

The Pennsylvania Fish and Boat Commission (PA FBC) commented that sections 89.34, 89.35 and 89.36 are discussed in the amendment but only in relation to water supply protection. PA FBC believes these sections need to be further revised to include the protection of surface and groundwater to better protect the streams in areas of high extraction mining.

PA FBC is correct in its assertion that sections 89.34, 89.35, and 89.36 were modified to provide additional protection for water supplies. In submitting this amendment, Pennsylvania was responding to the federal rules regarding restoration or replacement of water supplies. These federal rules do not provide additional protection from subsidence to streams. As noted in our response to comments by FWS, Pennsylvania's amendment does not alter the minimum federal requirements with respect to streams.

PA FBC also commented on Pennsylvania's Technical Guidance Document (TGD 563–2000–655) regarding the definition of a perennial stream. PA FBC's comments were similar to the comments provided by FWS on the same subject. Please see the FWS comments regarding TGD 563–2000–655.

OSM solicited, but did not receive, comments from the Pennsylvania Historical and Museum Commission, Bureau of Historic Preservation.

Public Comments

Public comments were received in writing and orally at the public hearing held in Washington, Pennsylvania on October 13, 1998. Sixteen people spoke at the public hearing. Additionally, we received written public comments, before and after the public hearing, from three citizen's groups, and seven private citizens. We also received comment letters from an industry group and four coal companies. In response to our reopening of the public comment period on December 8, 2000, we received comments from a citizen's group and an industry group. We have organized these comments and our response by the section of the BMSLCA or the regulations they pertain to. We also have a section of general comments that did not pertain to any specific portion of the BMSLCA or the regulations.

One commenter incorporated by reference OSM's November 12, 1996 and November 22, 1996 preliminary comments to Pennsylvania on Act 54 and Pennsylvania's not yet finalized regulations. Pennsylvania's regulations were adopted by the Pennsylvania Environmental Quality Board on March 17, 1998, and published in the Pennsylvania Bulletin on June 13, 1998. On July 29, 1998, pursuant to 30 CFR 732.17(b), Pennsylvania submitted Act 54 and the finalized regulations to OSM for its review. Accordingly, the preliminary issues raised by OSM in the 1996 letters were either addressed in the two ''issue letters'' sent by OSM to Pennsylvania requesting clarification of numerous issues [letters dated June 21, 1999 (Administrative record number PA 841.32) and June 23, 2000 (Administrative record number PA 841.40)] or satisfied by either changes in Pennsylvania's regulations or by Pennsylvania's explanations that were submitted as part of the July 29th submission. Pennsylvania responded to the first issue letter on June 1, 2000 (Administrative record number PA 841.39) and to the second on July 18, 2000 (Administrative record number PA 841.41). The substance of the issue letters and Pennsylvania's responses are discussed in the findings portion of this final rule. Therefore, OSM is not addressing its own preliminary 1996 comments on a separate basis.

Comments on the changes to the BMSLCA:

Section 5.1(a)(1)

Commenters noted that section 5.1(a)(1) of the BMSLCA only requires operators to provide an alternate water source that adequately services in quantity and quality the premining use or the foreseeable uses of the supply, which is contrary to the provisions of section 720(a)(1) of SMCRA. The commenters believe SMCRA requires restoration of water supplies to premining quality and quantity, which could be a higher standard than the use-based standard of the BMSLCA.

Other commenters voiced similar concerns and added that Pennsylvania's ''adequate for use'' standard, in many cases, would not meet state or federal requirements to maintain the value and use of the land.

The Director has found that Pennsylvania's program regarding the quality of replacement water supplies is as effective as the federal regulations. For an explanation of the reasons behind the Director's decision, please see the discussion regarding section 5.1(a)(2). Regarding quantity, the Director has conditionally approved

Pennsylvania's program to insure that replacement supplies and delivery systems will be of a caliber that will maintain the value and reasonably foreseeable uses of the land.

Section 5.1(a)(2)

Commenters contended that this section sanctions replacement of a marginally acceptable water quality, rather than requiring replacement of equivalent quality, by requiring that the water meet minimum standards defined under the Safe Drinking Water Act.

The Director believes that with respect to water quality, an equivalency determination can be made in terms of suitability for particular uses rather than requiring that the chemical composition of the replacement supply be identical to that of the premining supply. As a result, Pennsylvania's program will insure that water quality of replacement supplies will be equivalent to premining supplies. For more information on the Director's decision to approve this portion of the amendment please see the discussion of section 5.1(a)(2) of the BMSLCA in the Director's findings.

Section 5.1(a)(3)

Commenters alleged that when mining damages investor-owned water supply systems, the added costs of repairs are passed to water users in the form of higher water bills. The commenters believe that operators who cause the damage should pay for the repair of utility lines.

OSM does not agree with this comment. The federal regulation at 30 CFR 817.180 regarding utilities only requires that underground mining activities be conducted in a manner that minimizes damage, destruction or disruption of services provided by utilities. The rules do not require operators to reimburse utilities for damage to utility lines.

Section 5.1(b)

Commenters noted that this section eliminates a mine operator's responsibility for replacement of damaged water supplies if a claim of contamination, diminution or interruption is made more than two years after the supply has been adversely affected. The commenters believe this section is contrary to SMCRA because there is no limitation of action provided under federal law, and that section 509 of SMCRA requires a performance bond that extends for a minimum of five years after reclamation. The commenters believe that the federal rules indicate that wherever and whenever it is shown mining activity caused the loss, the operator is responsible for replacing it.

OSM agrees that this section is less stringent than SMCRA. For the reasons discussed in the finding for section 5.1(b), this section has not been approved by the Director.

Section 5.2

One commenter referenced the November 12, 1996 comments from OSM to Pennsylvania. As stated earlier, OSM is not addressing its own preliminary 1996 comments on a separate basis.

Section 5.2(a)(1)

Commenters noted that this section obligates citizens whose water supply has been damaged to first contact the operator. The commenters were concerned with the part of section 5.2(a)(1) requiring the operator to investigate reported water losses with reasonable diligence because there is no time frame limiting how long the company can take to conduct the investigation nor does the section define reasonable diligence.

The Director recognizes the commenters' concerns regarding timely investigation of citizen complaints and has approved the portion of section 5.2(b)(2) dealing with inspection to the extent that Pennsylvania recognizes that the approved program may require a more timely response to complaints than that required by this section. Additionally, the Director believes the amendment required of section 5.1(a)(1) of the BMSLCA responds to the commenters' concerns regarding the prompt replacement of all adversely affected water supplies.

Section 5.2(b)(2)

A commenter contended that this section allows up to 45 days for investigation of a claim of water loss, which contrasts with the federal law requiring prompt replacement of water supplies. OSM does not fully agree with this comment. In this section, Pennsylvania has placed a cap on the length of time an investigation may continue. There is no federal requirement limiting the length of time of investigations. As noted in the approval of this requirement, the Director is approving this portion of section 5.2(b)(2) to the extent that Pennsylvania recognizes that the approved program may require a more timely response to complaints than that required by this section.

A commenter also claimed that this section is not as effective as the federal regulations because it allows up to three years for permanent water supply replacement whereas the federal law defines prompt replacement as no longer than two years. For the reasons discussed in the finding for section 5.2(b)(2), the Director also agrees that this is less effective. The time frames for water supply replacement in the preamble to the federal regulations (60 FR 16727) are "* * * intended to assist regulatory authorities in deciding if water supplies have been 'promptly' replaced." The guidance indicates a permanent water supply should be provided within two years. Because section 5.2(b)(2) of BMSLCA can allow three years to pass before PADEP is required to issue orders for replacement, the Director has not approved the phrase in this section that reads, "* * * where the contamination, diminution or interruption does not abate within three years of the date on which the supply was adversely affected."

A commenter further alleged that it is unclear whether the term "orders" included in section 5.2(b)(2) contemplates an enforcement order. The Director has found that the Pennsylvania program adequately defines the orders that can be written in response to violations. Section 5.2(b)(2) describes the circumstances that may result in an order, but the approved program already defines the types of orders that Pennsylvania will issue. It is unnecessary to restate the types of orders that can be issued in this section.

Section 5.2(d)

One commenter noted if a landowner fails to allow access for a premining survey, and the landowner has been advised of the rights established by sections 5.1 and 5.3, the operator can escape liability where damage occurs unless the injured party has baseline data relative to the affected water supply. The commenter believes that this section limits the evidence that a water supply user or landowner can introduce in a manner that is improper and inconsistent with federal law. The commenter also asserted that it improperly shifted the burden of collecting hydrologic data to the landowner, that there was inadequate notice, and that the 10 day access period was too short.

Another commenter averred that this section's response to landowners who refuse operators requests to conduct a premining inspection is punitive and not in accordance with the federal regulations.

OSM agrees with these comments. The Director is not approving a portion of section 5.2(d) regarding burden of proof. This action will respond to the commenter's concerns that this section

will limit the evidence a water supply user or landowner can introduce to prove the effects of subsidence on a water supply. For a full discussion of the specific language and the reasons for not approving part of section 5.2(d), please see the discussion of that section earlier in this rulemaking.

Section 5.2(e)

Commenters contended that sections 5.2(e)(1), (2) and (3) each attempt to release an operator of responsibility for water loss in ways that are improper under federal law. The commenters believe that subsection (1), which relieves an operator from liability where the premining survey shows that the contamination, diminution or interruption existed prior to mining, appears to grant conclusive effect without allowing inquiry into whether the survey is accurate or sufficient to demonstrate a lack of causation.

The Director does not agree that this section limits the rights of landowners to challenge whether the survey is accurate or sufficient to demonstrate a lack of causation. Pennsylvania responded to a similar question in the preamble to its regulations regarding subsidence damage repair and water supply replacement (28 Pa.B. 2776). Pennsylvania noted that if a landowner disagreed with the premining survey results, he or she could arrange to have a certified laboratory conduct an independent survey at their own expense or ask PADEP to conduct a review of the results of the mine operator's survey and conduct additional testing, if necessary. Clearly, Pennsylvania envisioned that the results of premining sampling could be challenged.

The commenters further noted that subsection (2) relieves the operator of liability after a three-year lapse of time after mining. The commenters were concerned because the time of mining is not directly related to the timing of water loss, and this fails to consider that subsidence may not occur immediately, or that other factors may contribute to the water loss. The commenters further stated that the three-year limit is also arbitrary and inconsistent with the federal act which reserves jurisdiction and allows reassertion of jurisdiction at any time.

Finally, a commenter maintained that bond release should not terminate operator liability.

OSM generally agrees with the commenters. The Director has not approved this section because allowing an operator to be relieved of the liability to restore or replace affected water supplies three years after underground mining activities have ceased is inconsistent with SMCRA and the federal regulations. For a complete discussion of our reasons for not approving this section, see the discussion of section 5.2(e)(2).

With regard to the comment regarding bond release terminating operator liability, we have found that this section of the BMSLCA does not provide for termination of liability at bond release.

Finally, the commenters noted that subsection (3) appears to allow the operator to avoid responsibility by identifying another cause for the water loss. The commenters believed that OSM should seek an attorney general's opinion that the law assures that where the operator is partially or entirely responsible, state law imposes liability.

OSM did seek and receive a legal opinion from Pennsylvania regarding assignment of liability when two or more operators are responsible for water degradation, diminution or interruption. The Assistant Director for the Bureau of Regulatory Counsel wrote a memorandum dated May 15, 2000 (Administrative Record No. PA 841.39 document number 2 of 4), in which he indicated that the General Assembly's intent was to provide a remedy for water supplies affected by underground mining. This section is to be construed to relieve an operator of responsibility only where the contamination, diminution or interruption occurred solely as a result of some cause other than mining. Where mining is partly the cause of the contamination, diminution or interruption, the mine operator will not be relieved of the statutory obligation to restore or replace the affected water supply. The Director found that this opinion effectively answered the commenters' concerns.

Section 5.2(g)

Commenters alleged that section 5.2(g), which allows property purchase as an alternative to water supply replacement, is inconsistent with federal law because federal regulations require the operator to demonstrate that a suitable water source is available and could be feasibly developed. The commenters noted that the preamble to the federal regulations at 60 FR 16727 states that the intent of EPAct is that the current owner or successor could utilize the water if desired in the future. The commenters believe that there is no opportunity under the federal law for a company to avoid demonstrating that a replacement supply could be developed even if a landowner waives replacement.

Additionally, one commenter asserted that absent a demonstration by the operator that water quality and quantity can be protected or alternative supplies provided, a mining permit should not be issued.

OSM agrees with these comments. The Director has not approved section 5.2(g) of the BMSLCA. As noted in the preamble of the federal regulations on subsidence control (60 FR 16733), EPAct requires replacement of water supplies affected by subsidence. Compensation in lieu of replacement is not an option. The intent of the federal rules is to provide a water supply for current and future landowners. Compensation for a water loss or degradation will not allow water supplies to be available for future use.

Additionally, the federal regulation at 30 CFR 784.20(b)(8) requires subsidence control plans to contain a description of the measures to be taken to replace adversely affected protected water supplies if the presubsidence survey shows, or the regulatory authority determines, that diminution, contamination or interruption could occur. Thus, this section requires the permit application to contain information on water supply replacement before the permit is issued. With this information in the permit application, there would be no need for compensation in lieu of replacement, since replacement supplies must be designated before the permit is issued.

Section 5.2(h)

A commenter took exception with PADEP's role in providing advisory opinions. The commenter noted that if it was PADEP's opinion a water supply could be replaced, it should be replaced instead of allowing operators to offer compensation in lieu of replacement.

OSM agrees that this section provides remedies to operators that are inconsistent with the federal rules. The Director has not approved this section because it is connected with section 5.2(g) that allows compensation for damage to water supplies in lieu of replacement or restoration. The Director found that section 5.2(h) is not self-sustaining and is unenforceable without section 5.2(g). Therefore, it is inconsistent with the requirements of SMCRA and the federal regulations.

Section 5.3(c)

A commenter proposed that section 5.3(c), which provides landowners and water users who pursue water replacement through the courts subject themselves to the provisions in their deeds and leases, should be removed from the BMSLCA. The commenter felt that this provision rules out most citizen's rights to pursue justice in the

courts and overrides EPAct's requirement for water supply replacement wherever underground mine operations damage or disrupt water supply.

The Director has found that section 5.3(c) is inconsistent with section 720(a)(2) of SMCRA and the federal implementing rules to the extent that any state law negates the requirements of, or provides less protection than, EPAct. For a complete discussion of the matter, please see the Director's decision with regard to section 5.3(c).

Section 5.4

A commenter claimed that section 5.4 fails to require permittees to be responsible for subsidence damages in addition to operators and the use of the term ''proximity'' in section 5.4 unreasonably restricts an unqualified obligation to repair or compensate for material damage to non-commercial buildings and dwellings and related structures.

OSM disagrees that section 5.4 fails to make permittees responsible for damages in addition to operators. Under 25 Pa. Code 86.11(a) no person may operate a mine without obtaining a permit. Section 86.11(b) indicates that permits will be issued only to an operator. Since only operators can obtain a permit, Pennsylvania's use of the term ''operator'' is as effective as the federal definition of ''permittee'' at 30 CFR 701.5, which defines the term to mean a person holding or required to hold a permit to conduct surface coal mining and reclamation operations.

OSM also disagrees with the commenter on the use of the term ''proximity.'' Section 5.4(a) of the BMSLCA extends the requirements of compensation or restoration to damaged structures that overlie or are in the proximity of the mine. OSM requested that Pennsylvania define what was meant by the term ''proximity.'' Pennsylvania indicated that it understands the term to mean the structures defined in this section do not have to be directly above the mine workings in order to be covered by repair or compensation requirements. The phrase recognizes the fact that subsidence effects often extend outward from points where coal mining activities occur. Pennsylvania noted that the phrase is not interpreted to impose any specific distance limitations. The Director accepted this explanation of section 5.4(a).

A commenter stated that the term ''building'' does not include appurtenant structures and utilities annexed to those structures such as sewer lines, etc.

OSM disagrees in part with the commenter's assertion that the term ''building'' does not include appurtenant structures and utilities annexed to those structures such as sewer lines, etc. Pennsylvania's regulatory definition of permanently affixed appurtenant structures includes many of the structures that are within the definition of occupied dwelling and structures related thereto that is found in the federal regulations at 30 CFR 701.5. However, any structures that are not permanently affixed to the ground, Pennsylvania refers to as improvements. As noted in the findings regarding section 5.4, OSM expressed concerns with Pennsylvania's position on improvements and the same are addressed in the discussion thereof.

The same commenter noted that the requirement of ''prompt'' repair or replacement is absent from section 5.4. It is further alleged that this section fails to assure that the structure owner is paid the full amount of the diminution in value resulting from the subsidence-related damage. Additionally, the commenter contended that sections 5.4 and 5.5, through the use of time limits for filing claims, and agreements on compensation amounts and repair, infringes on the rights of landowners to prompt repair, replacement or compensation in full and to an unqualified right to secure immediate state and/or federal inspection of failures of the operators to provide compensation or repair.

OSM agrees with the comment that Pennsylvania's program fails to include a prompt standard for repair or compensation for subsidence damage. The Director's decision with regard to this issue can be found in the discussion of section 5.5(b).

OSM disagrees with the commenter that the section fails to assure that the structure owner is paid the full amount of the diminution in value resulting from the subsidence-related damage. As discussed in the findings regarding section 5.4(a), the Director believes that this section is consistent with SMCRA and the federal rules.

OSM agrees that the use of time limits for filing claims is less effective than the federal rules. For a complete discussion of this issue, see the Director's findings of this section.

OSM agrees in part that some agreements on compensation amounts or repair are less effective than the federal regulation requirements. As stated more fully in the Director's findings, if the agreements provide for the same protection as SMCRA then they are approvable. However, if the agreements provide for something less than what is required by SMCRA, then they are less effective.

Finally a commenter stated that the BMSLCA should be changed to include repair or compensation for damages to improvements to occupied dwellings.

OSM agrees with this comment. The Director believes that the changes required in this rulemaking to the definition of permanently affixed appurtenant structures and to section 5.4(a)(3) of the BMSLCA will satisfy the commenter's concerns.

Section 5.4 and 5.5

One commenter complained that mining companies only have to place a $10,000 bond to begin to destroy homes and water quality.

To address bonding issues, the Director has required Pennsylvania to submit an amendment to section 6 of the BMSLCA complying with 30 CFR 817.121(c)(5) which requires an adjustment of bond for subsidence damage. This provision requires an increase in bonds for damage to protected structures and water supplies if repair, compensation or replacement takes longer than 90 days.

Another commenter contended that where a homeowner's survey or an expert witness has found that damage to a structure was obviously caused by mining, an operator should be required to repair or compensate the landowner, even if no premining survey was completed.

OSM agrees that, under the federal program, the lack of a premining survey does not limit an operator's liability for repair or compensation. Accordingly, the Director has not approved the portions of the BMSLCA that limit operator's liability in those cases.

Finally, a commenter maintained that private agreements must not be allowed where they limit the protections provided in the federal regulations.

OSM agrees with this comment. The Director has found that nothing in the federal regulations prevents private agreements, however the terms of an agreement cannot diminish the protections afforded by EPAct and the federal regulations.

Section 5.6

One commenter stated that the BMSLCA needs to be changed to prohibit mining agreements that allow less than full compensation for repair of subsidence damage and water supply replacement. The commenter alleged that industry's use of confidential agreements and high-pressure tactics make homeowners feel they will be better off by signing these agreements. The commenter claimed that although

OSM requires full compensation, homeowners are discouraged from bringing these agreements to OSM and that Pennsylvania looks at agreements as a credible resolution and does not normally interfere with them.

As noted in the discussion of section 5.6, the Director approved the use of agreements only to the extent that any release in a voluntary agreement does not limit the protections of EPAct. There is nothing in the federal regulations prohibiting agreements between landowners and mining companies, however any agreement that provides a lesser amount of protection than is afforded by the federal regulations would not preclude enforcement of the regulatory requirements.

Section 5.6(c)

One commenter claimed that structures covered by requirements to repair or compensate for subsidence damage under federal law are exempt under Act 54. The commenter felt that agreements homeowners entered into after April 27, 1966, but prior to the effective date of Act 54, which provide for a waiver or release of the duty to repair or compensate, should not be valid.

OSM agrees with the commenter's concerns involving agreements made after April 27, 1966, but before the effective date of Act 54. The Director has not approved the last two sentences of this portion of the amendment. These sentences state, ''Nothing herein shall impair agreements entered into after April 27, 1966, and prior to the effective date of this section, which, for valid consideration, provide for a waiver or release of any duty to repair or compensate for subsidence damage. Any such waiver or release shall only be valid with respect to damage resulting from the mining activity contemplated by such agreement.'' The Director found these statements could validate agreements that are not as protective as the federal regulations and therefore has not approved the language.

Section 6

The Pennsylvania Coal Association (PCA) commented on financial guarantees for subsidence repair. PCA indicated that although the proposed program amendment does not require adjustment of the performance bond amount if subsidence causes damage to protected structures, bond adjustment is authorized by Pennsylvania's primacy regulations at 25 Pa. Code 86.152. PCA notes that while Act 54 does not require adjustment of the bonds for subsidence damage, it mandates use of an escrow mechanism to assure funds are available to mitigate damage. Operators are required to deposit funds in the escrow within six months if they wish to contest the repair obligations, or have not complied with the obligations. PCA asserts that the escrow option guarantees the repair or compensation obligations of section 720 of SMCRA.

Other commenters presented the opposing view that Pennsylvania's current bonding system is not sufficient to assure correction of subsidence-related damage. One commenter opined that the longwall mining regulations must be strengthened to shift the balance of power from the coal companies to a middle ground between coal operators and homeowners. The commenter discussed the disruption subsidence from longwall mining takes on personal and professional lives and felt that the bond posted should be equal to the fair market value of the home.

Two other commenters indicated that Pennsylvania has no provision for bonding for water loss and, in practice, requires only a $10,000 bond for structure repair. The commenters further claimed that homeowners need to be assured that funds are available for complete repairs and for water supplies, which could mean extensive new water lines in some areas.

We agree with the commenter that Pennsylvania does not require a bond for water loss. Additionally, as we noted in our discussion of section 6 of Pennsylvania's statute, the bond amount at the time of application may not be sufficient to repair or compensate for structural damage if the bonds are to be used to reclaim the site as well. While the escrow payments may adequately provide for correction of damage, they are not required unless the operator appeals an order.

Finally, we do not agree with PCA's assertion that 25 Pa. Code 86.152 requires adjustment of bond for subsidence damage. The provision at that section is discretionary on the part of Pennsylvania. Accordingly, there are no provisions in the Pennsylvania program that require the submission of additional bond in the event subsidence damage is not corrected. The Director, therefore, has required Pennsylvania to amend its program to include bonding provisions as effective as those found in 30 CFR 817.121(c)(5).

Section 9.1(b)

A commenter stated that the term ''minimize'' should mean a reduction in damage to the greatest extent possible. The commenter believes PADEP uses the term ''minimize'' to mean a reduction of damage in any amount. The commenter further indicated that damage should be minimized to a different level than the irreparable damage level of the Pennsylvania program.

OSM agrees that damage minimization must take place. The federal regulations at 30 CFR 817.121 require minimization of material damage to the extent economically and technically feasible except in certain circumstances. The steps to be taken to minimize damage would vary from case to case and would also depend on a judgment of the economic and technical circumstances surrounding the measures. As a result, the commenter's concern on PADEP's interpretation of the level of minimization would be largely dependent on site-specific circumstances and would have to be evaluated in that respect.

OSM agrees that Pennsylvania must minimize material damage to certain structures. The Director is requiring Pennsylvania to amend its program to require minimization of material damage.

Section 18.1(d)

A commenter contended that this section could be read to prevent data collection required to meet permitting requirements, rather than merely to restrict data collection solely to augment the analysis of deep mine impacts on water resources. The commenter felt that the final phrase, which refers to data collection outside of the context of this section, implies that the language of section subsection (d) is intended to have broader application.

OSM does not agree with the commenter's interpretation of this section. This section requires a compilation of information from deep mine permit applications, monitoring reports and other data submitted by operators, from enforcement actions and from any other appropriate source. As stated on Pennsylvania's website, the purpose of section 18 is to require Pennsylvania to ''assess the surface impacts of underground mining on buildings, water supplies and streams every five years.'' *See,* www.dep.state.pa.us/dep/deputate/minres/bmr/act54/index.html. This section does not seek to limit information already required by the Pennsylvania program. It only requires a compilation of information already required to be submitted. Subsection (d) does not allow PADEP to request additional information (except for water loss incidents or claims) to fulfill these provisions. While there is no direct corresponding federal requirement to this section, the Director found that this

portion of the amendment does not limit the rights and protections of the federal requirements.

Comments on regulation changes at 25 Pa. Code Chapter 89:

Section 89.5(a), Definition of De Minimis Cost Increase

One commenter stated that this section allows the operator to forgo payment of a de minimis cost, which is less than 15% of the operating and maintenance costs or less than $60 a year. The commenter maintained that this is a significant sum to many rural homeowners when paying over a 20 year period and that the federal rules make no such exemption.

OSM agrees with the comment. The Director has found that passing along the cost of a treatment system, even if the increased cost is de minimis, does not make a landowner or water user who has experienced water supply problems as a result of subsidence whole. The federal regulations require operators whose mining operations caused water supply contamination, interruption or diminution to replace or restore water supplies, including the cost of treatment if necessary.

Section 89.141(d)

A commenter noted that this section requires only a description of measures to correct damage to homes—allowing any amount of damage to homes short of irreparable damage, which PADEP must predict. The commenter pointed out the requirements to minimize damage found at 30 CFR 784.20 and 30 CFR 817.121(a)(1) and (2). The commenter felt that OSM must find sound methods for minimizing damage and use the dictionary meaning of minimize, which is to ''make the least of'' not just lessen or moderate.

OSM agrees that Pennsylvania's program does not contain damage minimization requirements below the irreparable damage level. The Director is requiring Pennsylvania to amend its program to require operators to minimize material damage to homes and non-commercial structures to the extent technologically and economically feasible.

Section 89.142a(f)(1)(ii)

One commenter asserted that non-commercial buildings not used by, or accessible to, the public are covered in the federal rules at 30 CFR 817.121(c) but not covered in Pennsylvania's program.

OSM does not agree with the comment regarding protection of non-commercial buildings. Pennsylvania's definition of non-commercial buildings is substantially the same as the federal definition at 30 CFR 701.5 and section 89.142a(f)(1)(ii) provides protection to non-commercial buildings. More information on this subject can be found in the discussion of section 5.4(a)(1) of the BMSLCA.

Section 89.142a(f)(1)(iii)

A commenter noted that this section provided some exemptions to protections found in federal regulations because it does not provide protection for improvements made after Act 54's effective date or date prior to the operator's next permit renewal. The commenter also stated that the federal rules have a rebuttable presumption of subsidence-related damage for homes with the 30-degree angle of draw from underground mining activities, but Pennsylvania's regulations do not contain a similar presumption for damages to structures.

OSM agrees with the comment regarding limitations on protections being dependent on the date of the operator's next permit renewal. As noted in the discussion in this rulemaking of section 5.4(a)(3) of the BMSLCA, the Director did not approve the phrase ''improvements in place on the effective date of this section or on the date of the first publication of the application for a Mine Activity Permit or a five-year renewal thereof for the operations in question and within the boundary of the entire mine as depicted in said application.''

OSM does not agree with the comment regarding angle of draw. As noted elsewhere in this rulemaking, OSM suspended its rules regarding a rebuttable presumption of causation by subsidence (30 CFR 817.121(c)(4)(i) through (iv)) in a December 22, 1999, **Federal Register** notice (64 FR 71652). As a result of the suspension, Pennsylvania does not need to include a counterpart to this regulation in its program.

Section 89.142a(g)

One commenter alleged that Pennsylvania does not intend to hold coal operators responsible for damage to investor-owned utilities, an exemption not included in the federal rules at 30 CFR 817.180. The commenter felt that this lack of conformity to the federal rules would result in higher utility costs to homeowners.

OSM does not agree with this comment. The provision of section 89.142a(g)(1) protects all structures protected by the federal regulations at 30 CFR 817.180. The commenter is apparently referencing remarks made by Pennsylvania in the preamble to the regulations on subsidence damage repair and water supply replacement. In the preamble (28 Pa.B. 2767), Pennsylvania noted that with respect to the definition of the term ''water supply'' it did not want to include language in that definition that could be interpreted to include investor-owned water transmission utilities. Pennsylvania indicated that the preamble discussion was made to illustrate the difference between connections from a well or spring to a residence and connections made to a water main that is part of a public water supply system. Connections from a well or spring are permanent affixed appurtenant structures that must be repaired by the mine operator if damaged. Damage to a water main and that part of the connecting piping that is owned by the water company would be covered under Pennsylvania regulation section 89.142a(g) relating to protection of utilities.

However, even though section 89.142a(g) protects the same types of utilities as the federal program it does not provide the same level of protection as the federal program. Pennsylvania protects utilities from underground mining while the federal program protects utilities from underground mining activities. The federal definition of underground mining activities includes more activities than the Pennsylvania definition of underground mining, which only pertains to removal of coal. The federal definition of underground mining activities found at 30 CFR 701.5 includes a combination of surface operations incident to underground extraction of coal as well as underground operations. This would include construction, use, maintenance, and reclamation of roads, above-ground repair areas, storage areas, processing areas, shipping areas, areas upon which are sited support facilities including hoist and ventilating ducts, areas utilized for the disposal and storage of waste and areas on which materials incident to underground mining operations are placed.

Another commenter suggested that the word ''prevent'' should be substituted for the word ''minimize.'' Section 89.142a(g) requires underground mining to minimize damage, destruction or disruption of utilities. The federal rules at 30 CFR 817.180 do not require prevention of damage, but rather minimization, the same as the Pennsylvania rule. Therefore, OSM does not agree that the word ''minimize'' should be changed.

Section 89.142a(h)

A commenter claimed that Pennsylvania's program does not provide for the premining monitoring of flow in perennial streams, which makes it impossible to determine adverse impacts by mining operations since no standard for comparison exists.

OSM does not agree with this comment. The approved Pennsylvania program at 25 Pa. Code 89.34 requires operators to include in their operation plan a description of streams, including quantitative seasonal flow conditions. This information could be used to determine any adverse impacts to perennial streams due to underground mining activities.

Section 89.144a

The Pennsylvania Coal Association (PCA) commented on the provisions of section 89.144a(a)(1) regarding an operator's relief from responsibility for repair or compensation for damages to structures when a landowner refuses access to an operator for conducting a premining survey. PCA contends there is no distinction between the requirements of the federal regulations where a landowner loses a rebuttable presumption of causation if access to an operator for a premining survey is denied and the state regulations that relieve an operator from repair or compensation requirements when access is denied. PCA states a landowner may be able to prove causation of subsidence damage, but that establishing the chain of causation would require extensive technical data and expert testimony. PCA further indicates that without a premining survey, there is no baseline information for determining an operator's liability, which is especially important in Pennsylvania given the extensive history of underground mining that makes damage from subsidence more likely than other states. Finally, PCA claims this portion of the program amendment should be approved because it is as effective as the federal regulations, since both the state and federal regulations are designed to encourage landowners to cooperate in premining surveys and to facilitate collection of baseline information. (Note: CONSOL, Pennsylvania Services Corporation, Maple Creek Mining, Inc. and UMCO Energy, Inc. submitted letters endorsing this and all other comments made by PCA).

OSM suspended the regulations (30 CFR 817.121 (c)(4)(i) through (iv)) regarding a rebuttable presumption in response to a challenge by the National Mining Association (64 FR 71652). As a result, 30 CFR 817.121 (c)(4)(iii), which formerly stated that landowners would lose the rebuttable presumption if they refused to let operators on their property to conduct a premining survey, is no longer valid. OSM also suspended the portion of 30 CFR 784.20(a)(3) that required a specific structural survey of all EPAct protected structures. At this time, there is no requirement that a structural survey be conducted or that a rebuttable presumption will be applied to determine if underground mining is responsible for subsidence damage to structures. However, the federal rules do require that owners of structures damaged by underground mining be compensated for the damages or that the damages be repaired by the operator. The regulations do not relieve an operator from the obligation of repair or compensation for damages caused by subsidence from underground mining. We acknowledge the difficulty of assessing the extent of subsidence damage without a presubsidence survey. But, exempting an operator from liability for repair or compensation for damages because a landowner does not allow access to the property for a premining survey does not comply with the intent of the EPAct provisions. As more fully discussed in our finding for 5.4(c) of the BMSLCA, premining damage surveys do not have to be conducted by an operator to be valid. The surveys can be conducted by independent parties hired by the landowners or even by the landowners themselves. This information can then be used by the regulatory authority to set the amount of compensation or assess the completeness of repairs. As stated earlier, in Pennsylvania's scenario, the homeowner would have no relief under BMSLCA even though he had relevant information that showed causation. Because the Pennsylvania program allowed relief from liability while the federal program does not contain a similar provision, we found that this provision of the Pennsylvania program is not as effective as the federal requirements.

Section 89.144a(a)(1)

One commenter noted that Pennsylvania's rules allow operator's to be relieved of liability for damage repair or compensation if the operator was denied access to a landowner's property for pre- or post-mining surveys. The commenter argued that if the homeowner or PADEP has credible evidence that mining caused the damage, he should not be punished for refusing operator surveys of his property.

OSM agrees with the commenter. The Director is not approving this provision because the federal rules requiring repair or compensation for damage to non-commercial buildings and dwellings and related structures [30 CFR 812.121(c)(2)] does not provide exception for any reason when an operator's underground mining operation has caused subsidence damage.

Section 89.145a(a)(1)

One commenter indicated that Pennsylvania's regulations require underground miners to take a premining survey prior to mining within a 1,000 feet of the water supply. The commenter expressed concern because water supply damage could occur from mining before the 1,000-foot distance from a home is reached.

OSM agrees with the commenter's concerns. The federal regulations at 30 CFR 784.20(a)(3) regarding presubsidence surveys require all drinking, domestic, or residential water supplies to be surveyed at the time of application. As noted in the Director's decision above, the Director is not approving the provision that allows for water supply surveys to be delayed until mining advances within 1,000 feet of a supply and is requiring Pennsylvania to amend its program to require permittees to submit the information required by 25 Pa. Code 89.145a(1)(i)–(v) that is necessary to meet the provisions of 30 CFR 784.20(a)(3) at the time of the application for all existing drinking, domestic, or residential water supplies.

Section 89.152(a)(2)

PCA commented on subsection (2) that provides that an operator can seek relief from responsibility for water supply replacement or restoration if the contamination, diminution or interruption is due to underground mining activities that occurred more than three years prior to the onset of water supply contamination, diminution or interruption. PCA noted that the operator is required to affirmatively prove all of the elements of this defense. The Pennsylvania Environmental Quality Board has interpreted this defense as not arising until three years after the mine has closed and all reclamation is complete. PCA contends this time period is long enough that it should cover all water supplies affected by underground mining. PCA further argued that since Pennsylvania's program provides for a rebuttable presumption that water supplies have been impacted within a thirty-five degree angle of draw, many water supplies will be replaced without

any proof on the part of the landowner. Even after three years have elapsed, the burden remains on the mine operator to affirmatively prove the elements of the defense. PCA proposes that for these reasons, the Pennsylvania program is more effective in some regards and no less effective than the federal regulations.

The Director agrees with PCA's contention that using the angle of draw in determining operator liability is an effective tool to assist regulators in requiring restoration or replacement for those supplies located within the angle of draw. However, the regulation could allow operators to be relieved from liability for replacement of some water supplies whether or not they are within the angle of draw, if more than three years elapsed after mine closing before the water supply is affected. When promulgating the federal regulations requiring replacement or restoration of water supplies, OSM indicated that even in cases where the landowner did not need a restored or replaced water supply to meet the postmining land use, the permittee would still be required to demonstrate the availability of a water source equivalent to premining quantity and quality so that the current owner or his or her successor could utilize the water if desired in the future (60 FR 16727). In making this statement, OSM envisioned that water supplies would be available under all circumstances for both present and future uses. While under section 25 Pa. Code 89.152(a)(2), Pennsylvania has left open the possibility that some water supplies will not replaced or restored, the federal regulation intended restoration or replacement of all water supplies without exception. As more fully discussed in the findings for 5.2(e)(2) of BMSLCA and 25 Pa. Code 89.152(a)(2), which are incorporated herein, the Director has not approved section 25 Pa. Code 89.152(a)(2).

Another commenter asserted that an operator does not have to replace a water supply if the loss occurred more than three years after the mining ceased and that the federal rules do not provide for this exemption. As stated above, OSM agrees.

Section 89.152(a)(4)

PCA commented on the provisions of this section that provide that an operator will not be liable for water supply replacement if the claim is made more than two years after the supply has been adversely affected. PCA argued that in the case of the two-year statute of limitations, the state has adopted an appropriate limitations period from existing state law. The two-year period is the same as that provided for common law water rights claims. PCA contended that federal law would likely assume the same limitations period and cited *DelCostello* v. *International Brotherhood of Teamsters,* 462 U.S. 151, 158 (1983) in support of its position. PCA indicated that this case provides that in the absence of an express limitations period in federal law, the analogous provision from state law should be adopted. Because there is no statute of limitations in SMCRA or EPAct, nor is any apparent federal policy served by a different federal limitation period, PCA asserted that the two-year period of this regulation is appropriate.

As discussed more fully in our finding regarding this section, we disagree that any statute of limitations is applicable. Additionally, the applicability of the two-year statute of limitations (generally used for torts) for water replacement has been rejected by the Commonwealth Court of Pennsylvania in *Carlson Mining Company* v. *Department of Environmental Resources,* 639 A.2d 1332, 1337 (1994). In Carlson, a coal company argued that Pennsylvania's funding mechanism for increased water operation and maintenance costs constituted damages under tort law. The court disagreed, stating that a ''water supply replacement order is not a civil action based on a tort; it is based on the Commonwealth's police power.'' Id. at 1337. While this case involved a surface coal mining operation, OSM believes that the rationale is applicable to underground coal mining operations since any operator who refuses to replace a water supply covered under the provisions of Act 54, would also be issued an order by Pennsylvania. See, 5.2(a)(3) and 5.2(b)(2) of the BMSLCA. Therefore, based on our findings, the Director has not approved section 89.152(a)(4).

Another commenter contended that this section was contrary to the federal rules. As stated above, OSM agrees.

Section 89.152(a)(5)

PCA commented on this provision that allows compensation to landowners in lieu of water supply replacement if an affected water supply is not replaced within three years. PCA claims this option would be rarely used but would give operators and landowners flexibility in dealing with a situation where restoration of water supplies is difficult. PCA proposes that Pennsylvania's regulations generally obligate operators to provide water replacement, but provide fair and reasonable provision for where circumstances make permanent restoration of affected water supplies impossible.

Finally, PCA noted that the buy out provision would not alter a mine operator's obligation to identify the availability of an alternative water source.

The Director does not agree with the comments. In the preamble to the federal regulations, OSM responded to a commenter with a similar viewpoint, i.e., that compensation be available as an option for those limited circumstances where an impacted supply cannot be restored (60 FR 16733). In response, OSM stated, ''[t]he terms of the Energy Policy Act unequivocally require replacement. Further, OSM does not anticipate that underground mining operations will be unable to comply with this statutory mandate. For example, if the permittee is unable to restore a spring or aquifer, the permittee should still be able to provide water from an alternative source, such as a public water supply, or by pipeline from another location.'' The Director has not approved section 89.152(a)(5) because it provides compensation rather than restoration or replacement as required by federal regulations and SMCRA.

Another commenter stated that 25 Pa. Code 89.152(a)(5)(ii) provides for voluntary agreements and payments instead of replacement of a water supply, which is required by the federal rules. OSM agrees for the reasons stated above.

PCA also commented on financial guarantees for subsidence repair. PCA contended that although the proposed program amendment does not require adjustment of the performance bond amount if subsidence causes damage to protected structures, bond adjustment is clearly authorized by Pennsylvania's primacy regulations. PCA noted that while Act 54 does not require adjustment of the bonds for subsidence damage, it does mandate use of an escrow mechanism to assure funds are available to mitigate damage. Operators are required to deposit funds in the escrow within six months if they wish to contest the repair obligations, or have not complied with the obligations. PCA stated that the escrow option guarantees the repair or compensation obligations of section 720 of SMCRA.

Other commenters presented the opposing view that Pennsylvania's current bonding system is not sufficient to assure correction of subsidence related damage. One commenter asserted that the longwall mining regulations must be strengthened to shift the balance of power from the coal companies to a middle ground between

coal operators and homeowners. The commenter discussed the disruption subsidence from longwall mining exacts on personal and professional lives and stated that the bond posted should be equal to the fair market value of the home.

Two other commenters indicated that Pennsylvania has no provision to bond for water loss and, in practice, requires only a $10,000 bond for structure repair. The commenters further claimed that homeowners need to be assured that funds are available for complete repairs and for water supplies, which could mean extensive new water lines in some areas.

OSM agrees with the comment regarding the federal requirement for submission of additional bond in the event subsidence related material damage occurs to protected land, structures and facilities or when contamination, diminution, or interruption occurs to protected water supplies.

The Director has required Pennsylvania to amend its program to include bonding provisions as effective as those found in 30 CFR 817.121(c)(5). Please see the Director's findings regarding section 6 of the BMSLCA for more information.

One commenter opined that if a coal operator lacks the means to post an adequate subsidence bond, then the operation should not be permitted.

OSM does not agree with this comment. The federal requirements for posting additional bond come into play only after subsidence damage has occurred and ninety days have elapsed without the operator completing the required repair, compensation, or replacement. The ninety days can be extended to one year under certain circumstances. There is no federal requirement for operators to demonstrate that additional bonds can be obtained prior to subsidence occurring. Even if premining surveys determine that subsidence damage is likely to occur at the time of the application, operators will not need to increase their bond if the repair, compensation or replacement occurs within the allotted time frames.

General Public Comments

A general comment was made regarding imminent danger. A commenter stated that the threat of danger rather than the manifestation of the damage should be sufficient to suspend operations in imminent danger situations.

OSM believes the commenter's concern is addressed by section 9.1(a) of the BMSLCA. This section requires that if the Department determines and notifies a mine operator that a proposed mining technique or extraction ratio will result in subsidence that causes an imminent hazard to human safety, the technique or extraction ratio will not be permitted unless the mine operator, prior to mining, takes measures approved by the Department to eliminate the imminent hazard. The Director found that this section is consistent with 30 CFR 817.121(f), which requires the suspension of underground mining if imminent danger is found to inhabitants of urbanized areas, cities, towns or communities.

A commenter also indicated that OSM should require Pennsylvania to mandate that the protection of 522(e)(5) of SMCRA, regarding prohibiting mining within 300 feet of an occupied dwelling unless waived by the owner, should be applied to underground mining.

On December 17, 1999, OSM published a rule in the **Federal Register** (64 FR 70838) in which we stated that we interpret sections 522(e) and 701(28) of SMCRA and the implementing rules to provide that subsidence due to underground mining is not a surface coal mining operation. Subsidence, therefore, is not prohibited in areas protected under the Act. Neither subsurface activities that may result in subsidence, nor actual subsidence, are prohibited on lands protected by section 522(e).

During the public hearing several commenters expressed dissatisfaction with the longwall mining process in general because of the damage subsidence causes to homes and water supplies. The Director notes that one of the purposes of SMCRA as stated at section 102(k) is to ''encourage the full utilization of coal resources through the development and application of underground extraction technologies.'' The longwall mining process has been proven to be an efficient way to insure the full utilization of coal resources. While damage to structures and water supplies is a regrettable consequence of longwall mining, the Energy Policy Act of 1992 was passed to insure that compensation for, or repair of, damages to structures and replacement of adversely affected water supplies was made. The Director finds that longwall mining is permissible under SMCRA but that operators have an obligation, as noted under the federal regulations, to minimize damage and to repair or compensate landowners for damages that occur.

Two commenters voiced concerns about protection of utilities. One of the commenters alleged that underground mining destroys natural gas wells. The Director has specified that the federal regulations at 30 CFR 817.180 require all underground mining activities to be conducted in a manner that minimizes damage, destruction or disruption of services provided by oil, gas, and water wells, as well as additional utility installations, unless the owner of the utility and the regulatory authority approve otherwise. This regulation was not modified by the passage of EPAct. Thus, impacts to gas wells are allowed if approved by the regulatory authority and the well's owner.

The second commenter noted that a ruling made by Pennsylvania's Environmental Hearing Board concluded that mere notification of intent to longwall mine beneath a public utility installation is insufficient to prevent damage to that installation. The commenter further noted that the standard requiring prevention of damage to a public utility was based on section 4 of the BMSLCA (52 P.S. 1406.4) that has since been repealed, but that Pennsylvania's Environmental Quality Board changed the word ''prevent'' to ''minimize'' without public input.

In our review of section 4 of the BMSLCA we found that, prior to its repeal, it provided protection from subsidence to municipal utilities or municipal public service operations (and other structures) in place on April 27, 1966. The Director is approving the repeal of section 4 because the federal regulations do not contain any provisions for protection of structures and utilities in place as of April 27, 1966.

V. Director's Decision

Based on the findings above we are approving the amendments to the Pennsylvania program, except as noted below.

BMSLCA

Section 5(b) (52 P.S. 1406.5(b)) is required to be amended to change the reference to section 6(a) to section 6(b).

Section 5.1(a)(1) (52 P.S. 1406.5a(a)(1)) is required to be amended to require the prompt replacement of all water supplies.

Section 5.1(b) (52 P.S. 1406.5a(b)) is not approved.

At section 5.2(b)(2) (52 P.S. 1406.5b(b)(2)) the phrase, ''* * * where the contamination, diminution or interruption does not abate within three years of the date on which the supply was adversely affected'' is not approved. Additionally this section is approved to the extent that Pennsylvania recognizes that the approved program regarding response to citizen complaints may

require a more timely response to complaints than that required by this section.

At section 5.2(d) (52 P.S. 1406.5b(d)) the sentence stating, ''Wherever a mine operator, upon request, has been denied access to conduct a premining survey and the mine operator thereafter served notice upon the landowner by certified mail or personal service, which notice identified the rights established by sections 5.1 and 5.3 and this section, was denied access and the landowner failed to provide or authorize access within ten days after receipt thereof, then such affirmative proof shall include premining baseline data, provided by the landowner or the department, relative to the affected water supply,'' is not approved.

Section 5.2(e)(2) (52 P.S. 1406.5b(e)(2)) is not approved.

Section 5.2(g) (52 P.S. 1406.5b(g)) is not approved.

Section 5.2(h) (52 P.S. 1406.5b(h)) is not approved.

At section 5.2(i) (52 P.S. 1406.5b(i)) the phrase ''and of reasonable cost'' is not approved.

Section 5.3(a) (52 P.S. 1406.5c(a)) is approved to the extent that agreements to replace a water supply or provide an alternative water supply meet the requirements established in the federal definition of ''replacement of water supply'' found at 30 CFR 701.5. This provision is not approved to the extent it allows compensation in lieu of restoration or replacement of affected water supplies.

Section 5.3(b) (52 P.S. 1406.5c(b)) is not approved to the extent that section 5.3(a) (52 P.S. 1406.5c(a)) is not approved.

Section 5.3(c) (52 P.S. 1406.5c(c)) is not approved to the extent any state law negates or provides less protection than EPAct.

Section 5.4(a) (52 P.S. 1406.5d) must be amended to require the prompt repair and compensation for the structures protected under section 720(a)(1) of SMCRA and 30 CFR 817.121(c)(2).

At section 5.4(a)(3) (52 P.S. 1406.5d(a)(3)) the phrase, ''in place on the effective date of this section or on the date of first publication of the application for a Mine Activity Permit or a five-year renewal thereof for the operations in question and within the boundary of the entire mine as depicted in said application'' is not approved.

Section 5.4(c) (52 P.S. 1406.5d(c)) is not approved.

Section 5.5(a) (52 P.S. 1406.5e(a)) is required to be amended to make it clear that operators are responsible for repair or compensation to landowners of structures damaged by subsidence from underground mining operations.

Section 5.5(b) (52 P.S. 1406.5e(b)) is not approved.

Section 5.5(c) (52 P.S. 1406.5e(c)) is approved to the extent that Pennsylvania recognizes the approved program regarding response to citizen complaints may require a more timely response to complaints than that required by this section. Additionally, the portion of 5.5(c) that states, ''* * * within six months or a longer period if the department finds that the occurrence of subsidence or subsequent damage may occur to the same building as a result of mining,'' is not approved. Finally, this section is required to be amended to insure that any written damage determinations made by PADEP will take into account subsidence due to underground coal mining operations, as required by SMCRA.

At section 5.5(f) (52 P.S. 1406.5e(f)) the phrase, ''* * * within six months or longer or such period as the department has established or fail to perfect an appeal of the department's order directing such repair or compensation'' is not approved.

At section 5.6(c) (52 P.S. 1406.5f(c)) the following two sentences are not approved: ''Nothing herein shall impair agreements entered into after April 27, 1966, and prior to the effective date of this section, which, for valid consideration, provide for a waiver or release of any duty to repair or compensate for subsidence damage. Any such waiver or release shall only be valid with respect to damage resulting from the mining activity contemplated by such agreement.''

Section 5.6(d) (52 P.S. 1406.5f(d)) is not approved to the extent that section 5.6(c) is not approved.

Section 6 (52 P.S. 1406.6) must be amended to comply with the provisions of 30 CFR 817.121(c)(5), which requires a permittee to obtain additional performance bond when subsidence related material damage to land or structures occurs, or when a protected water supply is contaminated, diminished or interrupted. The additional bond must be in the amount of the estimated repairs or in the amount of the decrease in value of a protected structure or in the amount of the estimated cost to replace a protected water supply if the repair, compensation or replacement takes longer than 90 days.

The Regulations at 25 Pa. Code Chapter 89

In section 89.5, the definition of ''de minimis cost increase'' is not approved.

In section 89.5, the definition of ''fair market value'' is not approved.

In section 89.5, the phrase ''securely attached to the land surface'' in the definition of ''permanently affixed appurtenant structures'' is not approved.

Section 89.141(d)(3) is to be amended to require subsidence control plans to provide a description of the measures to be taken to ensure subsidence will not cause material damage to, or reduce the reasonably foreseeable uses of, all the structures or features protected under 30 CFR 784.20(b)(5).

Section 89.141(d)(6) is to be amended to insure the requirements of 30 CFR 784.20(b)(5) and (b)(7) are met when occupied residential dwellings and structures related thereto and community or institutional buildings are not protected by 25 Pa. Code 89.141(d)(3) and they are materially but not irreparably damaged.

Section 89.142a(c)(3) is to be amended to insure that Pennsylvania has the discretion to suspend mining in cases where the initial subsidence control plan or the operator's actions fail to prevent material damage, until the operator's subsidence control plan ensures the prevention of further material damage, as required in 30 CFR 817.121(e).

Section 89.142a(d) is required to be amended to insure the prevention or minimization of material damage to occupied residential dwellings and community or institutional buildings.

Section 89.142a(f)(1) is required to be amended to be no less effective than 30 CFR 817.121(c) in requiring prompt repair or compensation to landowners.

In section 89.142a(f)(1)(iii), the portion of the amendment that states, ''* * * or on the date of first publication of the application for a coal mining activity permit or a 5-year renewal thereof for the operations in question and within the boundary of the entire mine as depicted in the application'' is not approved.

Section 89.142a(g)(1) is required to be amended to require all underground mining activities to be conducted in a manner consistent with 30 CFR 817.180.

In section 89.143a(c), the portion that states, ''* * * within 6 months of the date that the building owner sent the operator notification of subsidence damage to the structure * * *'' is not approved. Additionally, the phrase, ''within 2 years of the date damage to the structure occurred * * *'' is also not approved.

In section 89.143a(d)(3), the portion which states, ''* * * within 6 months of the date of issuance of the order. The Department may allow more than 6

months if the Department finds that further damage may occur to the same structure as a result of additional subsidence'' is not approved.

Section 89.144a(a)(1) is not approved.

Section 89.145a(a)(1) is required to be amended to include provision that the survey information that need only be acquired to the extent that it can be collected without extraordinary efforts or expenditures of excessive sums of money, is only applicable when it applies to inconveniencing landowners. The amendment must remove the provision that allows for water supply surveys to be delayed until mining advances within 1000 feet of a supply. Finally, this section must also be amended to require permittees to submit the information required by 25 Pa. Code 89.145a(a)(1)(i)–(vi) that is necessary to meet the provisions of 30 CFR 784.20(a)(3) at the time of the application for all existing drinking, domestic, or residential water supplies.

Section 89.145a(b) is required to be amended to be no less effective than 30 CFR 817.41(j) in requiring prompt replacement or restoration of water supplies. Additionally section 89.145a(b) is required to be amended, if necessary, to ensure that the phrase ''satisfy the water user's needs and the demands of any reasonably foreseeable uses'' is consistent with the actual use and the reasonably foreseeable use of the supply, regardless of whether the current owner has demonstrated plans for the use.

Section 89.145a(e)(1) is required to be amended to assure the prompt supply of temporary water to all landowners whose water supply has been impacted by underground mining, regardless of whether the water supply is within the area of presumptive liability.

Section 89.145a(e)(2) is required to be amended to require the restoration of water quantity in temporary water supplies to the same level as permanent water supplies, as noted in 25 Pa. Code 89.145a(f)(3).

Section 89.145a(f)(1)(v) is not approved to the extent that it passes de minimis cost increases for operation and maintenance of water supplies to landowners.

Sections 89.145a(f)(3)(i) and (ii) are required to be amended, if necessary, to ensure that the phrase ''satisfy the water user's needs and the demands of any reasonably foreseeable uses'' is consistent with the actual use and the reasonably foreseeable uses.

Section 89.146a(c) is approved to the extent that it is consistent with, or more timely than, the citizen complaint procedures. However, Pennsylvania is required to amend its program to the extent the time frames are longer than the citizen complaint procedures.

Section 89.152(a)(2) is not approved.

Section 89.152(a)(4) is not approved

Section 89.152(a)(5)(i) is not approved.

Section 89.152(a)(5)(ii) is approved to the extent that the agreement to replace a water supply or provide an alternative water supply meets the requirements established in the federal definition of ''replacement of water supply'' found at 30 CFR 701.5. This section is not approved for agreements that provide for replacement of or an alternate supply of water to the extent that water supply will not meet the requirements of the federal definition. This section is also not approved to the extent that it allows compensation in lieu of restoration or replacement of affected water supplies.

Sections 89.141(d), 89.141(d)(9), 89.142a(a), 89.142a(f)(1), 89.142a(f)(2)(i), 89.142a(h)(1), 89.142a(h)(2), 89.142a(i)(1), 89.143a(a), 89.143a(d)(1), 89.143a(d)(2), 89.143a(d)(3), 89.155(b)(1) and (2), and 89.155(c) are required to be amended to be no less stringent than section 720(a) of SMCRA with regard to the definition of underground mining operations.

We find that good cause exists under 5 U.S.C. 553(d)(3) to make this final rule effective immediately. Section 503(a) of SMCRA requires that the state's program demonstrates that the state has the capability of carrying out the provisions of the Act and meeting its purposes. Making this regulation effectively immediately will expedite that process. Additionally, 30 CFR 732.17(h)(12) requires decisions approving or disapproving program amendments to be published in the **Federal Register** and ''* * * shall be effective upon publication unless the notice specifies a different effective date.''

VI. Effect of Director's Decision

Since July 28, 1995, enforcement of EPAct requirements in Pennsylvania has occurred under 30 CFR 843.25(a)(4) with a combination of state enforcement and direct federal enforcement. This portion of the notice explains how the Director's decision on the proposed amendment affects the regulation of underground mining impacts in Pennsylvania.

Section 2504 of EPAct added section 720 to SMCRA. Section 720(a)(1) required prompt repair or compensation for material damage to non-commercial buildings and occupied residential dwellings and related structures as a result of subsidence due to underground coal mining operations, and section 720(a)(2) required prompt replacement of certain identified water supplies adversely affected by underground coal mining operations. Section 720 also required that these protections be in place immediately for all underground coal mining operations conducted after October 24, 1992.

To implement the water supply replacement and structure damage repair requirements, OSM solicited comments in a March 31, 1995, **Federal Register** notice (60 FR 16750–16751), and on July 28, 1995, OSM decided that initial enforcement of EPAct requirements in Pennsylvania under 30 CFR 843.25(a)(4) would be accomplished through a combination of state and OSM enforcement (60 FR 38685–38689). Under the initial enforcement process, Pennsylvania agreed to investigate all subsidence-related complaints and take remedial action. Pennsylvania advised that it would defer to OSM in those situations where the federal rules provide greater relief for the complainant under 817.41(j), and 817.121(c)(2). Finally, under 30 CFR 843.25(b)(3), direct federal enforcement is to remain in effect in states with approved regulatory programs until OSM approves, under Part 732, provisions consistent with sections 817.41(j) and 817.121(c)(2).

Water Supply Replacement: As discussed in this notice, the Director is approving provisions that are no less effective than EPAct, and several provisions that extend protection beyond the counterpart federal standards. Extended coverage includes a rebuttable presumption for temporary water supplies and protection of agricultural water supplies. However, the Director is not approving several provisions affording less protection than the minimum level required under EPAct. These include provisions that allowed the operator to provide compensation to landowners in lieu of water supply replacement if the water supply is not restored or replaced within three years, time limits on the filing of claims for affected water supplies, and a provision that allowed up to three years to pass before an order for a permanent alternate water supply must be issued. Finally, the Director has required a number of amendments to the Pennsylvania program. The required amendments include the provision of prompt replacement of all adversely affected supplies, and that water supply surveys of existing supplies be submitted at the time of the permit application.

The Director's decision will result in continued case-by-case direct federal enforcement in Pennsylvania to carry out the requirements of 30 CFR 817.41(j)

with respect to water supply replacement provisions. For example, while Pennsylvania's provisions require prompt temporary replacement of an adversely affected supply within the rebuttable presumption zone, the provisions do not address prompt temporary or permanent water supply replacement under any other circumstances. While the Director has required Pennsylvania to submit an amendment to address this issue, the water supply replacement provisions of 30 CFR 817.41(j) will continue to be implemented by PADEP to the extent of its authority and supplemented by direct federal enforcement, as needed on a case-by-case basis to assure prompt replacement of affected supplies. For those water replacement related provisions that are now part of the approved program, OSM will monitor state performance and enforcement though the normal oversight process.

Structure Repair and Compensation: As discussed in this notice, the Director is approving provisions that are no less effective than EPAct, and several provisions extending greater protection than the minimum federal standards. These include structure compensation provisions that provide for reimbursement based upon the cost to repair or replace, reimbursement of associated temporary relocation costs, repair or compensation for certain agricultural structures, and an irreparable damage standard requiring permission of the property owner to proceed with the subsidence related activities. However, the Director is not approving proposed provisions resulting in less protection than that afforded under EPAct. These include the denial of subsidence repair and compensation based upon the refusal of access for pre-subsidence surveys, time limits on the filing of claims for subsidence damage, and a provision that would prevent PADEP from issuing orders requiring repair and compensation until six months after a property owner had notified the permittee of subsidence damage. Finally, the Director has required a number of amendments to the Pennsylvania program, including the provision of prompt repair and compensation for occupied dwellings and non-commercial buildings and the development of subsidence damage bonding requirements consistent with the federal standards.

The Director's decision will result in continued case-by-case direct federal enforcement in Pennsylvania to carry out the requirements of 30 CFR 817.121(c)(2) with respect to structure repair and/or compensation. For example, Pennsylvania's proposed amendment did not require prompt repair and compensation for all structures covered under EPAct, did not cover all underground operations, did not cover certain related structures, and placed conditions on property owners that could limit structure repair and/or compensation to levels below the minimum federal standards. The Director has not approved certain of these provisions and required Pennsylvania to submit amendments to address the aforementioned and other issues. Until such time as the required amendments are approved, the provisions of 30 CFR 817.121(c)(2) will continue to be implemented by PADEP through state provisions supplemented by direct federal enforcement, as needed on a case-by-case basis to assure prompt repair of, and or compensation for, all covered structures. For those structure damage-related provisions that are now part of the approved program, OSM will monitor state performance and enforcement though the normal oversight process.

Finally, Section 503 of SMCRA provides that a state may not exercise jurisdiction under SMCRA unless the state program is approved by the Secretary. Similarly, 30 CFR 732.17(a) requires that any change of an approved state program be submitted to OSM for review as a program amendment. The Federal regulations at 30 CFR 732.17(g) prohibit any changes to approved state programs that are not approved by OSM. In the oversight of the Pennsylvania program, we will recognize only the statutes, regulations and other materials we have approved, together with any consistent implementing policies, directives and other materials. We will require Pennsylvania to enforce only approved provisions.

VII. Procedural Determinations

Executive Order 12866—Regulatory Planning and Review

This rule is exempted from review by the Office of Management and Budget under Executive Order 12866.

Executive Order 12630—Takings

This rule does not have takings implications. This determination is based on the analysis performed for the counterpart federal regulation.

Executive Order 12988—Civil Justice Reform

The Department of the Interior has conducted the reviews required by section 3 of Executive Order 12988 and has determined that, to the extent allowed by law, this rule meets the applicable standards of subsections (a) and (b) of that section. However, these standards are not applicable to the actual language of state regulatory programs and program amendments since each such program is drafted and promulgated by a specific state, not by OSM. Under sections 503 and 505 of SMCRA (30 U.S.C. 1253 and 1255) and 30 CFR 730.11, 732.15, and 732.17(h)(10), decisions on proposed state regulatory programs and program amendments submitted by the states must be based solely on a determination of whether the submittal is consistent with SMCRA and its implementing federal regulations and whether the other requirements of 30 CFR parts 730, 731, and 732 have been met.

Executive Order 13132—Federalism

This rule does not have federalism implications. SMCRA delineates the roles of the federal and state governments with regard to the regulation of surface coal mining and reclamation operations. One of the purposes of SMCRA is to ''establish a nationwide program to protect society and the environment from the adverse effects of surface coal mining operations.'' Section 503(a)(1) of SMCRA requires that state laws regulating surface coal mining and reclamation operations be ''in accordance with'' the requirements of SMCRA, and section 503(a)(7) requires that state programs contain rules and regulations ''consistent with'' regulations issued by the Secretary pursuant to SMCRA.

Executive Order 13211—Regulations That Significantly Affect the Supply, Distribution, or Use of Energy

On May 18, 2001, the President issued Executive Order 13211 which requires agencies to prepare a Statement of Energy Effects for a rule that is (1) considered significant under Executive Order 12866, and (2) likely to have a significant adverse effect on the supply, distribution, or use of energy. Because this rule is exempt from review under Executive Order 12866, and because it is not expected to have a significant adverse effect on the supply, distribution, or use of energy, a Statement of Energy Effects is not required.

National Environmental Policy Act

This rule does not require an environmental impact statement because section 702(d) of SMCRA (30 U.S.C. 1292(d)) provides that agency decisions on proposed state regulatory program provisions do not constitute major Federal actions within the meaning of section 102(2)(C) of the

National Environmental Policy Act (42 U.S.C. 4332(2)(C)).

Paperwork Reduction Act

This rule does not contain information collection requirements that require approval by the Office of Management and Budget under the Paperwork Reduction Act (44 U.S.C. 3507 *et seq.*).

Regulatory Flexibility Act

The Department of the Interior certifies that this rule will not have a significant economic impact on a substantial number of small entities under the Regulatory Flexibility Act (5 U.S.C. 601 *et seq.*). The state submittal, which is the subject of this rule, is based upon counterpart federal regulations for which an economic analysis was prepared and certification made that such regulations would not have a significant economic effect upon a substantial number of small entities. In making the determination as to whether this rule would have a significant economic impact, the Department relied upon the data and assumptions for the counterpart federal regulation.

Small Business Regulatory Enforcement Fairness Act

This rule is not a major rule under 5 U.S.C. 804(2), the Small Business Regulatory Enforcement Fairness Act. This rule: (a) Does not have an annual effect on the economy of $100 million; (b) Will not cause a major increase in costs or prices for consumers, individual industries, federal, state, or local government agencies, or geographic regions; and (c) Does not have significant adverse effects on competition, employment, investment, productivity, innovation, or the ability of U.S. based enterprises to compete with foreign-based enterprises. This determination is based upon the fact that the state submittal, which is the subject of this rule, is based upon counterpart federal regulations for which an analysis was prepared and a determination made that the federal regulation was not considered a major rule.

Unfunded Mandates

This rule will not impose an unfunded mandate on state, local, or tribal governments or the private sector of $100 million or more in any given year. This determination is based upon the fact that the state submittal, which is the subject of this rule, is based upon counterpart federal regulations for which an analysis was prepared and a determination made that the federal regulation did not impose an unfunded mandate.

List of Subjects in 30 CFR Part 938

Intergovernmental relations, Surface mining, Underground mining.

Dated: June 29, 2001.

Allen D. Klein,

Regional Director, Appalachian Regional Coordinating Center.

For the reasons set out in the preamble, Title 30, chapter VII, subchapter T of the Code of Federal Regulations is amended as set forth below:

PART 938—PENNSYLVANIA

1. The authority citation for part 938 continues to read as follows:

Authority: 30 U.S.C. 1201 *et seq.*

2–3. Section 938.12 is added to read as follows:

§ 938.12 State statutory, regulatory, and proposed program amendment provisions not approved.

(a) We are not approving the following provisions or portions of provisions of the proposed program amendment that Pennsylvania submitted on July 29, 1998:

(1) Section 5.1(b) (52 P.S. 1406.5a(b)) of the BMSLCA.

(2) At section 5.2(b)(2) (52 P.S. 1406.5b(b)(2)) of the BMSLCA, the phrase, ''* * * where the contamination, diminution or interruption does not abate within three years of the date on which the supply was adversely affected.''

(3) At section 5.2(d) (52 P.S. 1406.5b(d)) of the BMSLCA the phrase, ''Wherever a mine operator, upon request, has been denied access to conduct a premining survey and the mine operator thereafter served notice upon the landowner by certified mail or personal service, which notice identified the rights established by sections 5.1 and 5.3 and this section, was denied access and the landowner failed to provide or authorize access within ten days after receipt thereof, then such affirmative proof shall include premining baseline data, provided by the landowner or the department, relative to the affected water supply.''

(4) Section 5.2(e)(2) (52 P.S. 1406.5b(e)(2)) of the BMSLCA.

(5) Section 5.2(g) (52 P.S. 1406.5b(g)) of the BMSLCA.

(6) Section 5.2(h) (52 P.S. 1406.5b(h)) of the BMSLCA.

(7) At section 5.2(i) (52 P.S. 1406.5b(i)) of the BMSLCA the phrase, ''and of reasonable cost.''

(8) The portion of section 5.3(a) (52 P.S. 1406.5c(a)) of the BMSLCA that allows agreements for water replacement that do not fully comply with federal requirements for restoration or replacement of water supplies. Additionally, the portion of section 5.3(a) (52 P.S. 1406.5c(b)) that allows compensation in lieu of restoration or replacement of affected water supplies.

(9) Section 5.3(b) (52 P.S. 1406.5c(b)) of the BMSLCA is not approved to the extent that section 5.3(a) (52 P.S. 1406.5c(a)) is not approved.

(10) Section 5.3(c) (52 P.S. 1406.5c(c)) of the BMSLCA is not approved to the extent any state law negates or provides less protection than EPAct.

(11) At section 5.4(a)(3) (52 P.S. 1406.5d(a)(3)) the phrase, ''in place on the effective date of this section or on the date of first publication of the application for a Mine Activity Permit or a five-year renewal thereof for the operations in question and within the boundary of the entire mine as depicted in said application.''

(12) Section 5.4(c) (52 P.S. 1406.5d(c)) of the BMSLCA.

(13) Section 5.5(b) (52 P.S. 1406.5e(b)) of the BMSLCA.

(14) At section 5.5(c) (52 P.S. 1406.5e(c)) of the BMSLCA, the phrase, ''* * * within six months or a longer period if the department finds that the occurrence of subsidence or subsequent damage may occur to the same building as a result of mining.''

(15) At section 5.5(f) (52 P.S. 1406.5e(f)) of the BMSLCA, the phrase, ''* * * within six months or longer or such period as the department has established or fail to perfect an appeal of the department's order directing such repair or compensation.''

(16) At section 5.6(c) (52 P.S. 1406.5f(c)) of the BMSLCA, the following two sentences: ''Nothing herein shall impair agreements entered into after April 27, 1966, and prior to the effective date of this section, which, for valid consideration, provide for a waiver or release of any duty to repair or compensate for subsidence damage. Any such waiver or release shall only be valid with respect to damage resulting from the mining activity contemplated by such agreement.''

(17) Section 5.6(d) (52 P.S. 1406.5f(d)) of the BMSLCA is not approved to the extent that section 5.6(c) has not been approved.

(18) At 25 Pa. Code 89.5, the definition of ''de minimis cost increase.''

(19) At 25 Pa. Code 89.5, the definition of ''fair market value.''

(20) At 25 Pa. Code 89.5, the phrase ''securely attached to the land surface''

in the definition of ''permanently affixed appurtenant structures.''

(21) 25 Pa. Code 89.142a(f)(1)(iii) the portion of the amendment that states, ''* * * or on the date of first publication of the application for a coal mining activity permit or a 5-year renewal thereof for the operations in question and within the boundary of the entire mine as depicted in the application.''

(22) At 25 Pa. Code 89.143a(c) the portion which states, ''* * * within 6 months of the date that the building owner sent the operator notification of subsidence damage to the structure * * *'' and the portion which states, ''within 2 years of the date damage to the structure occurred.''

(23) At 25 Pa. Code 89.143a(d)(3), the portion of the amendment that states, ''* * * within 6 months of the date of issuance of the order. The Department may allow more than 6 months if the Department finds that further damage may occur to the same structure as a result of additional subsidence.''

(24) 25 Pa. Code 89.144a(a)(1).

(25) The portion of 25 Pa. Code 89.145a(a)(1) that allows for water supply surveys to be delayed until mining advances within 1,000 feet of a supply.

(26) The portion of 25 Pa. Code 89.145a(f)(1)(v) that passes de minimis cost increases for operation and maintenance of water supplies to landowners.

(27) 25 Pa. Code 89.152(a)(2).

(28) 25 Pa. Code 89.152(a)(4).

(29) 25 Pa. Code 89.152(a)(5)(i).

(30) 25 Pa. Code 89.152(a)(5)(ii) is not approved for agreements that provide for replacement of an alternate supply of water to the extent that the water supply will not meet the federal definition of replacement of water supply. The section is also not approved to the extent it allows compensation in lieu of restoration or replacement of affected water supplies.

(b) [Reserved]

4. Section 938.15 is amended in the table by adding a new entry in chronological order by ''Date of Final Publication'' to read as follows:

§ 938.15 Approval of Pennsylvania regulatory program amendments.

* * * * *

Original amendment submission date	Date of final publication	Citation/description
*	*	*
July 29, 1998	December 27, 2001	Bituminous Mine Subsidence and Land 2001 Conservation Act: Repeal of Section 4 (52 P.S. 1406.4); 5(b)(partial approval); 5.1(a)(1) (52 P.S. 1406.5a(a)(1) (conditional approval); 5.1(a)(2) and (3) (52 P.S. 1406.5a(a)(2) and (3)); 5.2(a)(1), (2), and (3) (52 P.S. 1406.5b(a)(1), (2), and (3)); 5.2(b)(1) (52 P.S. 1406.5b(b)(1)); 5.2(c) (52 P.S. 1406.5b(c)); 5.2(e)(1) and (3) (52 P.S. 1406.5b(e)(1) and (3)); 5.2(f) (52 P.S. 1406.5b (f); 5.2(j) (52 P.S. 1406.5b(j)); 5.2(k) (52 P.S. 1406.5b(k)); 5.4(a) (52 P.S. 1406.5d(a))(partial approval); 5.4(a)(1), (2) and (4) (52 P.S. 1406.5d(a)(1), (2) and (4)); 5.4(b) (52 P.S. 1406.5d(b)); 5.5(a) (52 P.S. 1406.5e(a))(partial approval); 5.5 (d), (e), and (g) (52 P.S. 1406.5e(d), (e) and (g)); 5.6(a) and (b) (52 P.S. 1406.5f(a) and (b)); 6 (52 P.S. 1406.6))(partial approval); 9.1(a), (b), (c), and (d) (52 P.S. 1406.9a(a), (b), (c), and (d); Repeal of Section 15 (52 P.S. 1406.15); 17.1 (52 P.S. 1406.17a); 18.1 (52 P.S. 1406.18a) 25 Pa. Code Section: 89.5, the definitions of the following terms: ''dwelling,'' ''irreparable damage,'' ''material damage,'' ''noncommercial building,'' ''public buildings and facilities,'' ''public water supply system,'' ''rebuttable presumption area,'' ''underground mining,'' ''underground mining operations,'' and ''water supply;'' 89.33; 89.34; 89.35; 89.36; 89.141(a); 89.141(d)(2), (4), (5), (7), (8), (10) and (11); 89.141(d), (d)(3), (6), and (9)(partial approval); deletion of 89.142; 89.142a(a) (partial approval) 89.142a(a)(1), (2), (3) and (4); 89.142a(b); 89.142a(c)(1) and (2)(i) '' (v); 89.142a(c)(3) (partial approval); 89.142a(d) (partial approval); 89.142a(e); 89.142a(f)(1) (partial approval); 89.142a(f)(1)(i), (ii), (iv), and (v); 89.142a(f)(2)(i) (partial approval); 89.142a(g)(1) (partial approval); 89.142a(g)(2), and (3); 89.142a(h) (1) and (2) (partial approval); 89.142a(i)(1) (partial approval); 89.142a)(i)(2), (j), (k), and (l); deletion of 89.143; 89.143a(a) (partial approval); 89.143a(b); 89.143a(d)(1) and (2) (partial approval);deletion of 89.144; 89.144a(a)(2), and (3); deletion of 89.145; 89.145a(a)(1)(i)–(vi); 89.145a(a)(2) and (3); 89.145a(b)(partial approval); 89.145a(c); 89.145a(d); 89.145a(e)(1) and (2) (partial approval); 89.145a(f)(1)(i)–(iv); 89.145a(f)(2); 89.145a(f)(3)(i) and (ii)(partial approval); 89.145a(f)(3)(iii); 89.145a(f)(4); 89.146a(a) and (b); 89.146a(c) (partial approval); 89.152(a)(1) and (3); 89.152(b); 89.153 (a), (b), and (c); 89.154(a) through (d); 89.155(a), 89.155(b)(1) and (2) (partial approval); 89.155(b)(3) and (4); 89.155(c) (partial approval).

4. Section 938.16 is amended by adding paragraphs (hhhh) through (bbbbbb) to read as follows:

§ 938.16 Required regulatory program amendments.

* * * * *

(hhhh) By February 25, 2002 Pennsylvania must submit either a proposed amendment or a description of an amendment to be proposed, together with a timetable for adoption to amend section 5(b) of the BMSLCA (52 P.S. 1406.5(b)) to delete the reference to section 6(a) of the BMSLCA and replace it with a reference to 6(b) of the BMSLCA.

(iiii) By February 25, 2002 Pennsylvania must submit either a proposed amendment or a description of an amendment to be proposed, together with a timetable for adoption to amend section 5.1(a)(1) of the BMSLCA (52 P.S. 1406.5a(a)(1)) to require the prompt replacement of all water supplies.

(jjjj) By February 25, 2002 Pennsylvania must submit either a proposed amendment or a description of an amendment to be proposed, together with a timetable for adoption to remove section 5.1(b) of the BMSLCA (52 P.S. 1406.5a(b)).

(kkkk) By February 25, 2002 Pennsylvania must submit either a proposed amendment or a description of an amendment to be proposed, together with a timetable for adoption to delete the phrase, ''* * * where the contamination, diminution or interruption does not abate within three years of the date on which the supply was adversely affected'' from section 5.2(b)(2) of the BMSLCA (52 P.S. 1406.5b(b)(2)).

(llll) By February 25, 2002 Pennsylvania must submit either a proposed amendment or a description of an amendment to be proposed, together with a timetable for adoption to delete the phrase, ''Wherever a mine operator, upon request, has been denied access to conduct a premining survey and the mine operator thereafter served notice upon the landowner by certified mail or personal service, which notice identified the rights established by sections 5.1 and 5.3 and this section, was denied access and the landowner failed to provide or authorize access within ten days after receipt thereof, then such affirmative proof shall include premining baseline data, provided by the landowner or the department, relative to the affected water supply.'' from section 5.2(d) of the BMSLCA (52 P.S. 1406.5b(d)).

(mmmm) By February 25, 2002 Pennsylvania must submit either a proposed amendment or a description of an amendment to be proposed, together with a timetable for adoption to remove section 5.2(e)(2) of the BMSLCA (52 P.S. 1406.5b(e)(2)).

(nnnn) By February 25, 2002 Pennsylvania must submit either a proposed amendment or a description of an amendment to be proposed, together with a timetable for adoption to remove section 5.2(g) of the BMSLCA (52 P.S. 1406.5b(g)).

(oooo) By February 25, 2002 Pennsylvania must submit either a proposed amendment or a description of an amendment to be proposed, together with a timetable for adoption to remove section 5.2(h) of the BMSLCA (52 P.S. 1406.5b(h)).

(pppp) By February 25, 2002 Pennsylvania must submit either a proposed amendment or a description of an amendment to be proposed, together with a timetable for adoption to remove the phrase, ''and of reasonable cost'' from section 5.2(i) of the BMSLCA (52 P.S. 1406.5b(i)).

(qqqq) By February 25, 2002 Pennsylvania must submit either a proposed amendment or a description of an amendment to be proposed, together with a timetable for adoption to make it clear in section 5.3(a) (52 P.S. 1406.5c(a)) that agreements to replace a water supply or provide an alternative water supply must meet the requirements established in the definition of ''replacement of water supply'' at 30 CFR 701.5 and that compensation in lieu of restoration or replacement of affected water supplies is prohibited.

(rrrr) By February 25, 2002 Pennsylvania must submit either a proposed amendment or a description of an amendment to be proposed, together with a timetable for adoption to insure the provisions of section 5.3(b) of the BMSLCA (52 P.S. 1406.5c(b)) reflect the Director's decision on section 5.3(a) (52 P.S. 1406.5c(a)).

(ssss) By February 25, 2002 Pennsylvania must submit either a proposed amendment or a description of an amendment to be proposed, together with a timetable for adoption to make it clear that section 5.3(c) of the BMSLCA (52 P.S. 1406.5c(c)) cannot negate or provide less protection than EPAct.

(tttt) By February 25, 2002 Pennsylvania must submit either a proposed amendment or a description of an amendment to be proposed, together with a timetable for adoption to amend section 5.4 of the BMSLCA (52 P.S. 1406.5d) to require the prompt repair and compensation for structures protected under section 720(a)(1) of SMCRA and 30 CFR 817.121(c)(2).

(uuuu) By February 25, 2002 Pennsylvania must submit either a proposed amendment or a description of an amendment to be proposed, together with a timetable for adoption to amend section 5.4(a)(3) of the BMSLCA (52 P.S. 1406.5d(a)(3)) to remove the phrase, ''in place on the effective date of this section or on the date of first publication of the application for a Mine Activity Permit or a five-year renewal thereof for the operations in question and within the boundary of the entire mine as depicted in said application.''

(vvvv) By February 25, 2002 Pennsylvania must submit either a proposed amendment or a description of an amendment to be proposed, together with a timetable for adoption to remove section 5.4(c) of the BMSLCA (52 P.S. 1406.5d(c)).

(wwww) By February 25, 2002 Pennsylvania must submit either a proposed amendment or a description of an amendment to be proposed, together with a timetable for adoption to amend section 5.5(a) of the BMSLCA (52 P.S. 1406.5e(a)) to make it clear that operators are responsible for repair or compensation to landowners of structures damaged by subsidence from underground mining operations.

(xxxx) By February 25, 2002 Pennsylvania must submit either a proposed amendment or a description of an amendment to be proposed, together with a timetable for adoption to remove section 5.5(b) of the BMSLCA (52 P.S. 1406.5e(b)).

(yyyy) By February 25, 2002 Pennsylvania must submit either a proposed amendment or a description of an amendment to be proposed, together with a timetable for adoption to remove the following phrase from section 5.5(c) of the BMSLCA (52 P.S. 1406.5e(c)), ''* * * within six months or a longer period if the department finds that the occurrence of subsidence or subsequent damage may occur to the same building as a result of mining.'' Pennsylvania must also amend section 5.5(c) to insure that written damage determinations made by PADEP will take into account subsidence due to underground coal mining operations as required by SMCRA. Finally, Pennsylvania must also amend section 5.5(c) of the BMSLCA to insure the timeframes for investigation of claims of subsidence damage are consistent with citizen complaint procedures.

(zzzz) By February 25, 2002 Pennsylvania must submit either a proposed amendment or a description of an amendment to be proposed, together with a timetable for adoption to remove the following phrase from section 5.5(f) of the BMSLCA (52 P.S. 1406.5e(f)), ''* * * within six months or longer or such period as the department has established or fail to perfect an appeal of the department's order directing such repair or compensation.''

(aaaaa) By February 25, 2002 Pennsylvania must submit either a proposed amendment or a description of an amendment to be proposed, together with a timetable for adoption to remove the following two sentences from section 5.6(c) of the BMSLCA (52 P.S. 1406.5f(c)): ''Nothing herein shall impair agreements entered into after April 27, 1966, and prior to the effective date of this section, which, for valid consideration, provide for a waiver or release of any duty to repair or compensate for subsidence damage. Any such waiver or release shall only be valid with respect to damage resulting from the mining activity contemplated by such agreement.''

(bbbbb) By February 25, 2002 Pennsylvania must submit either a proposed amendment or a description of an amendment to be proposed, together with a timetable for adoption to insure the provisions of section 5.6(d) of the BMSLCA (52 P.S. 1406.5f(d)) reflect the Director's decision on not approving

language in section 5.6(c) of the BMSLCA (52 P.S. 1406.5f(c)).

(ccccc) By February 25, 2002 Pennsylvania must submit either a proposed amendment or a description of an amendment to be proposed, together with a timetable for adoption to amend section 6 of the BMSLCA (52 P.S. 1406.6) to comply with the provisions of 30 CFR 817.121(c)(5) regarding when, and under what circumstances, the regulatory authority must require permittees to obtain additional performance bond and the amount of such bond.

(ddddd) By February 25, 2002 Pennsylvania must submit either a proposed amendment or a description of an amendment to be proposed, together with a timetable for adoption to remove the definition of ''de minimis cost increase,'' from 25 Pa. Code 89.5.

(eeeee) By February 25, 2002 Pennsylvania must submit either a proposed amendment or a description of an amendment to be proposed, together with a timetable for adoption to remove the definition of ''fair market value,'' from 25 Pa. Code 89.5.

(fffff) By February 25, 2002 Pennsylvania must submit either a proposed amendment or a description of an amendment to be proposed, together with a timetable for adoption to remove the phrase ''securely attached to the land surface'' in the definition of ''permanently affixed appurtenant structures'' at 25 Pa. Code 89.5.

(ggggg) By February 25, 2002 Pennsylvania must submit either a proposed amendment or a description of an amendment to be proposed, together with a timetable for adoption to amend 25 Pa. Code 89.141(d)(3) to provide the protections of 30 CFR 784.20(b)(5).

(hhhhh) By February 25, 2002 Pennsylvania must submit either a proposed amendment or a description of an amendment to be proposed, together with a timetable for adoption to amend 25 Pa. Code 89.141(d)(6) to insure the requirements of 30 CFR 784.20(b)(5) and (b)(7) are met when occupied residential dwellings and structures related thereto and community or institutional buildings are not protected by 25 Pa. Code 89.141(d)(3) and they are materially damaged but not irreparably damaged.

(iiiii) By February 25, 2002 Pennsylvania must submit either a proposed amendment or a description of an amendment to be proposed, together with a timetable for adoption amend 25 Pa. Code 89.142a(c)(3) to make it as effective as 30 CFR 817.121(e), which imposes on the regulatory authority the obligation to require permittees to modify subsidence control plans to ensure the *prevention* of further material damage in the cases where the initial plan or operator's actions fail and as effective as 30 CFR 817.121(e) in providing the authority to suspend mining until such a plan is approved.

(jjjjj) By February 25, 2002 Pennsylvania must submit either a proposed amendment or a description of an amendment to be proposed, together with a timetable for adoption to amend 25 Pa. Code 89.142a(d) to insure the prevention or minimization of material damage to occupied residential dwellings and community or institutional buildings.

(kkkkk) By February 25, 2002 Pennsylvania must submit either a proposed amendment or a description of an amendment to be proposed, together with a timetable for adoption to amend 25 Pa. Code 89.142a(f)(1) to secure prompt repair or compensation to landowners.

(lllll) By February 25, 2002 Pennsylvania must submit either a proposed amendment or a description of an amendment to be proposed, together with a timetable for adoption to remove the phrase from 25 Pa. Code 89.142a(f)(1)(iii), which states, ''* * * or on the date of first publication of the application for a coal mining activity permit or a 5-year renewal thereof for the operations in question and within the boundary of the entire mine as depicted in the application.''

(mmmmm) By February 25, 2002 Pennsylvania must submit either a proposed amendment or a description of an amendment to be proposed, together with a timetable to amend 25 Pa. Code 89.142a(g)(1) to require all underground mining activities be conducted in a manner consistent with 30 CFR 817.180.

(nnnnn) By February 25, 2002 Pennsylvania must submit either a proposed amendment or a description of an amendment to be proposed, together with a timetable for adoption to remove the phrase from 25 Pa. Code 89.143a(c) that states, ''* * * within 6 months of the date that the building owner sent the operator notification of subsidence damage to the structure * * *.'' Additionally, the amendment must remove the phrase, ''within 2 years of the date damage to the structure occurred.''

(ooooo) By February 25, 2002 Pennsylvania must submit either a proposed amendment or a description of an amendment to be proposed, together with a timetable for adoption to remove the sentences from 25 Pa. Code 89.143a(d)(3) that state, ''* * * within 6 months of the date of issuance of the order. The Department may allow more than 6 months if the Department finds that further damage may occur to the same structure as a result of additional subsidence.''

(ppppp) By February 25, 2002 Pennsylvania must submit either a proposed amendment or a description of an amendment to be proposed, together with a timetable for adoption to remove 25 Pa. Code 89.144a(a)(1).

(qqqqq) By February 25, 2002 Pennsylvania must submit either a proposed amendment or a description of an amendment to be proposed, together with a timetable for adoption to amend 25 Pa. Code 89.145a(a)(1) to make it clear that the requirement that survey information need only be acquired to the extent that it can be collected without extraordinary efforts or expenditures of excessive sums of money, is only applicable when it applies to inconveniencing landowners. The amendment must remove the provision that allows for water supply surveys to be delayed until mining advances within 1000 feet of a supply. Finally, this section must also be amended to require permittees to submit the information required by 25 Pa. Code 89.145a(a)(1)(i)–(vi) that is necessary to meet the provisions of 30 CFR 784.20(a)(3) at the time of the application for all existing drinking, domestic, or residential water supplies.

(rrrrr) By February 25, 2002, Pennsylvania must submit either a proposed amendment or a description of an amendment to be proposed, together with a timetable for adoption to 25 Pa. Code 89.145a(b) is required to be amended to be no less effective than 30 CFR 817.41(j) in requiring prompt replacement or restoration of water supplies. Additionally, section 89.145a(b) is required to be amended, if necessary, to ensure that the phrase ''satisfy the water user's needs and the demands of any reasonably foreseeable uses' is consistent with the actual use and the reasonably foreseeable use of the supply, regardless of whether the current owner has demonstrated plans for the use.

(sssss) By February 25, 2002 Pennsylvania must submit either a proposed amendment or a description of an amendment to be proposed, together with a timetable for adoption to amend 25 Pa. Code 89.145a(e)(1) to assure the prompt supply of temporary water to all landowners whose water supply has been impacted by underground mining, regardless of whether the water supply is within the area of presumptive liability.

(ttttt) By February 25, 2002 Pennsylvania must submit either a proposed amendment or a description of an amendment to be proposed, together

with a timetable for adoption to amend 25 Pa. Code 89.145a(e)(2) to require the restoration of water quantity in temporary water supplies to the same level as permanent water supplies, as noted in 25 Pa. Code 89.145a(f)(3).

(uuuuu) By February 25, 2002 Pennsylvania must submit either a proposed amendment or a description of an amendment to be proposed, together with a timetable for adoption to amend 25 Pa. Code 89.145a(f)(1)(v) to make it clear that that de minimis cost increases for operation and maintenance of water supplies are not to be passed to landowners or water users.

(vvvvv) By February 25, 2002 Pennsylvania must submit either a proposed amendment or a description of an amendment to be proposed, together with a timetable for adoption to amend 25 Pa. Code 89.145a(f)(3)(i) and (ii), if necessary, to ensure that the phrase ''satisfy the water user's needs and the demands of any reasonably foreseeable uses' is consistent with the actual use and the reasonably foreseeable uses.

(wwwww) By February 25, 2002 Pennsylvania must submit either a proposed amendment or a description of an amendment to be proposed, together with a timetable for adoption to amend 25 Pa. Code 89.146a(c) to the extent the time frames for the Department's investigation are longer than those in Pennsylvania's approved citizen complaint procedures.

(xxxxx) By February 25, 2002 Pennsylvania must submit either a proposed amendment or a description of an amendment to be proposed, together with a timetable for adoption to remove 25 Pa. Code 89.152(a)(2).

(yyyyy) By February 25, 2002 Pennsylvania must submit either a proposed amendment or a description of an amendment to be proposed, together with a timetable for adoption to remove 25 Pa. Code 89.152a(4).

(zzzzz) By February 25, 2002 Pennsylvania must submit either a proposed amendment or a description of an amendment to be proposed, together with a timetable for adoption to remove 25 Pa. Code 89.152a(5)(i).

(aaaaaa) By February 25, 2002 Pennsylvania must submit either a proposed amendment or a description of an amendment to be proposed, together with a timetable for adoption to amend 25 Pa. Code 89.152a(5)(ii) to remove that portion of the section allowing compensation in lieu of restoration or replacement of affected water supplies. Additionally the amendment must make it clear that agreements to replace a water supply or provide for replacement of an alternate supply of water must meet the requirements established in the federal definition of ''replacement of water supply'' at 30 CFR 701.5.

(bbbbbb) By February 25, 2002 Pennsylvania must submit either a proposed amendment or a description of an amendment to be proposed, together with a timetable for adoption to amend 25 Pa. Code sections 89.141(d), 89.141(d)(9), 89.142a(a), 89.142a(f)(1), 89.142a(f)(2)(i), 89.142a(h)(1), 89.142a(h)(2), 89.142(a)(i)(1), 89.143a(a), 89.143a(d)(1), 89.143a(d)(2), 89.143a(d)(3), 89.155(b)(1) and (2) and 89.155(c) to be no less stringent than section 720(a) of SMCRA.

[FR Doc. 01–31614 Filed 12–26–01; 8:45 am]

BILLING CODE 4310–05–P

Reader Aids

Federal Register

Vol. 66, No. 248

Thursday, December 27, 2001

CUSTOMER SERVICE AND INFORMATION

Federal Register/Code of Federal Regulations

General Information, indexes and other finding aids	**202–523–5227**
Laws	**523–5227**
Presidential Documents	
Executive orders and proclamations	**523–5227**
The United States Government Manual	**523–5227**
Other Services	
Electronic and on-line services (voice)	**523–3447**
Privacy Act Compilation	**523–3187**
Public Laws Update Service (numbers, dates, etc.)	**523–6641**
TTY for the deaf-and-hard-of-hearing	**523–5229**

ELECTRONIC RESEARCH

World Wide Web

Full text of the daily Federal Register, CFR and other publications is located at: **http://www.access.gpo.gov/nara**

Federal Register information and research tools, including Public Inspection List, indexes, and links to GPO Access are located at: **http://www.nara.gov/fedreg**

E-mail

FEDREGTOC-L (Federal Register Table of Contents LISTSERV) is an open e-mail service that provides subscribers with a digital form of the Federal Register Table of Contents. The digital form of the Federal Register Table of Contents includes HTML and PDF links to the full text of each document.

To join or leave, go to **http://listserv.access.gpo.gov** and select *Online mailing list archives, FEDREGTOC-L, Join or leave the list (or change settings);* then follow the instructions.

PENS (Public Law Electronic Notification Service) is an e-mail service that notifies subscribers of recently enacted laws.

To subscribe, go to **http://hydra.gsa.gov/archives/publaws-l.html** and select *Join or leave the list* (or change settings); then follow the instructions.

FEDREGTOC-L and **PENS** are mailing lists only. We cannot respond to specific inquiries.

Reference questions. Send questions and comments about the Federal Register system to: **info@fedreg.nara.gov**

The Federal Register staff cannot interpret specific documents or regulations.

FEDERAL REGISTER PAGES AND DATE, DECEMBER

60139–62906 3
62907–63148 4
63149–63306 5
63307–63486 6
63487–63620 7
63621–63904 10
63905–64094 11
64095–64348 12
64349–64734 13
64735–64908 14
64909–65090 17
65091–65422 18
65423–65596 19
65597–65810 20
65811–66292 21
66293–66704 26
66705–67068 27

CFR PARTS AFFECTED DURING DECEMBER

At the end of each month, the Office of the Federal Register publishes separately a List of CFR Sections Affected (LSA), which lists parts and sections affected by documents published since the revision date of each title.

3 CFR

Proclamations:
6641 66547
6763 66547
7351 66547
7507 62907
7508 62909
7509 62911
7510 63149
7511 63899
7512 ..... 64497, 66547
7513 64095
7514 65089
7515 66547

Executive Orders:
10513 (Revoked by EO 13245) 66268
11274 (Revoked by EO 13243) 66262
11487 (Revoked by EO 13244) 66267
11582 (See EO 13238) 63903
11822 (Revoked by EO 13246) 66270
11880 (Revoked by EO 13242) 66260
11957 (Revoked by EO 13241) 66258
12608 (Revoked in part by EO 13242) 66260
12958 (See Order of December 10, 2001) 64347
12998 (Revoked by EO 13242) 66260
13238 63903
13239 64907
13240 66257
13241 66258
13242 66260
13243 66262
13244 66267
13245 66268
13246 66270
13247 66271
13248 66705

Orders:
Order of December 10, 2001 64347

Administrative Orders:
Presidential Determinations:
No. 02–05 of December 14, 2001 66707
No. 02–07 of November 21, 2001 63487
Memorandums:
December 7, 2001 64735

5 CFR

213 66709
250 66709
293 66709
294 66709
300 66709
302 63905
315 66709
316 66709
317 63905
330 63905
332 66709
333 63905
335 63905
534 63906
339 66709
351 66709
352 66709
534 66709
550 66709
591 63906
720 66709
732 66709
831 66709
837 66709
841 66709
930 ..... 63906, 66709
960 66709
6001 60139

Proposed Rules:
890 64160

7 CFR

56 66712
70 66712
210 65597
226 65597
301 63151
989 65423
1710 66293

Proposed Rules:
81 64918
352 63005
1410 63339
1710 66359

8 CFR

103 65811

9 CFR

70 63588
71 65598
78 63910
85 65598
88 63588
94 ..... 62913, 63910, 63911

Proposed Rules:
94 63633

10 CFR

20 64737
30 64737

32 64737
34 64737
40 64737
50 64737
51 64737
430 65091
1707 66714
Proposed Rules:
50 65661
54 65141
72 63964

11 CFR

Proposed Rules:
106 66813

12 CFR

5 62914
201 65816
203 66295
226 65604
500 65817
505 65817
506 65817
516 65817
517 65817
541 65817
543 65817
544 65817
545 65817
546 65817
552 65817
556 65817
559 65822
560 ....65817, 65822
561 65817
563 65817
563d 65817
563g 65817
565 65817
568 65817
570 65817
573 65817
583 65817
590 65817
700 65622
701 ....65622, 65625, 65628
712 65622
715 65622
723 65622
725 65622
790 65622
930 66718
932 66718
1773 65097
Proposed Rules:
Ch. VII 66359
Ch. IX 63008
226 64381
360 65144
584 63517
701 65662
951 66813
1750 65146

13 CFR

120 64739

14 CFR

25 64349
39 ....60140, 60143, 60144, 60145, 62915, 63154, 63157, 63159, 63307, 63621, 63912, 63913, 63915, 64097, 64099, 64100, 64102, 64104, 64105, 64107, 64109, 64112, 64114, 64116, 64117, 64119, 64121, 64124, 64125, 64128, 64129, 64132, 64133, 64135, 64138, 64739, 65102, 65426, 65427, 65629, 65827, 65829, 65832, 66296, 66299, 66302, 66304, 66730, 66733, 66734, 66737, 66739
71 ....63489, 63623, 64909, 64910, 65834, 66741
73 63433
91 63888
93 63294
97 ....64139, 64141
107 63474
108 63474
Proposed Rules:
39 ....63009, 63010, 63341, 64925, 64928, 64931, 65663, 65666, 66360, 66819, 66821, 66823, 66828
71 ....60162, 63517, 66832
93 64778
154 66238
234 66833

15 CFR

4 65631
4a 65631
4b 65631
744 65836
801 ....63916, 63918
Proposed Rules:
738 65666
742 65666

16 CFR

3 64142
4 64142
305 63749
1700 65836

17 CFR

Proposed Rules:
15 64383
230 66839

18 CFR

381 63162
Proposed Rules:
35 65858

19 CFR

12 63490

20 CFR

655 63298
Proposed Rules:
404 63634

21 CFR

Ch. 1 66741
1 65429
510 ....63163, 63164, 63499, 66742
520 ....63165, 63166
524 63164
556 62916
558 ....62916, 63499, 63500
Proposed Rules:
500 63519
1310 64173

24 CFR

30 63436
Proposed Rules:
5 65162
202 65162

25 CFR

Proposed Rules:
292 66847
542 66500

26 CFR

1 ....63920, 66307
301 ....64351, 64740, 64911
602 ....64076, 64351, 66307
Proposed Rules:
1 ....63203, 64385, 64904, 66362, 66376
301 64386
602 64386

28 CFR

Proposed Rules:
97 64934

29 CFR

578 63501
579 63501
580 63501
4022 64744
4044 64744
Proposed Rules:
470 65163
1910 64946
1915 64946
1926 64946
1928 64946

30 CFR

256 60147
915 66743
917 66314
918 64746
938 67010
944 62917
Proposed Rules:
250 ....66848, 66851
918 66377
936 ....63968, 65858

31 CFR

211 63623

32 CFR

619 65651

33 CFR

100 63624
110 ....66747, 66749
117 ....62935, 62936, 62938, 62939, 62940, 63626, 63627, 65104, 66751
165 ....60151, 62940, 64144, 64912, 65105, 65838, 66747, 66749, 66753
Proposed Rules:
1 63640
117 66865
147 63642
165 ....64778, 66380
175 63645
181 63650

34 CFR

Proposed Rules:
Ch. VI 63203

36 CFR

18 66755
1202 65652

37 CFR

201 ....62942, 63920
Proposed Rules:
255 64783

38 CFR

3 66763
17 ....63446, 63449, 64904
20 60152
Proposed Rules:
3 64174
20 65861

39 CFR

20 ....64353, 65780
Proposed Rules:
111 65668

40 CFR

8 63454
9 65256
52 ....63311, 63921, 64146, 64148, 64750, 64751, 66317, 66769
62 ....63311, 63938, 64151, 64152, 65448
63 ....63313, 65072, 66321
70 ....62945, 62946, 62949, 62951, 62954, 62961, 62967, 62969, 63166, 63168, 63170, 63175, 63180, 63184, 63188, 63318, 63503
80 66769
81 ....64751, 66317
122 65256
123 65256
124 65256
125 65256
152 64759
153 66769
156 64759
180 ....63192, 64768, 65450, 65839, 65850, 66325, 66333, 66769, 66773, 66778, 66786
261 ....60153, 62973
271 ....63331, 66340, 66342
300 64357
721 63941
Proposed Rules:
52 ....63204, 63343, 63972, 63982, 64176, 64783, 66382
60 64176
62 ....63985, 64207, 64208, 65460
63 ....65079, 66381
80 ....60153, 65164, 66867
81 66382
89 65164
90 65164
91 65164
271 ....66382, 66383
300 64387
1048 65164
1051 65164
1065 65164
1068 65164

41 CFR

Ch. 301 66794
61–250 65452

42 CFR

411 60154

1001.....62980, 63749
Proposed Rules:
1001.....65460

43 CFR

3600.....63334
3610.....63334
3620.....63334
3800.....63334

44 CFR

64.....63627
65.....65107, 65110
67.....65115, 65120
Proposed Rules:
61.....60176
67.....65668, 65671

46 CFR

Proposed Rules:
67.....64784

47 CFR

1.....62992
25.....63512
36.....65856
54.....64775, 65856
73 .....60156, 60157, 63199, 63629, 64776, 64777, 65122, 66346, 66803
76.....62992
101.....63512
Proposed Rules:
1.....64785, 65866
2.....64785
51.....63651, 64946
73 .....63209, 63653, 63654, 63986, 63997, 64792, 65164, 65872, 65873, 66383, 66384, 66867
87.....64785

48 CFR

Ch. 1.....65346, 65372, 66984, 66990
2 .....65349, 65351, 65353
5.....65370
8.....65367
9.....66984, 66986
11.....65351
12.....65370
14.....66984, 66986
15 .....65351, 65368, 65369, 66984, 66986
19.....65370
22.....65370
23.....65351, 65370
25.....65349, 65370
31.....66984, 66986
32.....65353
39.....65371
42.....65351
44.....65367
52 .....65349, 65353, 65367, 65370, 66984, 66986
53.....65370
202.....63334
212.....63335
215.....63334
217.....63336
237.....63335
242.....63334
Proposed Rules:
1.....65792
36.....65792
53.....65792
235.....63348, 65676
1823.....64391
1836.....64391
1852.....64391

49 CFR

195.....66994
225.....66346
241.....63942
571 .....60157, 64154, 64358, 65376
572.....64368
Proposed Rules:
107.....63096
171.....63096
172.....63096
173.....63096
177.....63096
178.....63096
180.....63096
219.....64000
567.....65536
571.....65536
573 .....64078, 64087, 65165
574.....65536, 66190
575.....65536
576.....66190
577.....64078, 64087

50 CFR

17 .....62993, 63752, 66803
222.....65658
223.....65658
230.....64378
600.....63199
622.....60161
635.....63003, 64378
648 .....63003, 65454, 65660, 66348
660 .....63199, 63630, 66811
679.....64380, 64915
Proposed Rules:
17 .....63349, 63654, 66384, 66868
20.....63665
21.....63349, 63665
222.....64793, 65873
223.....64793, 65676
224.....64793, 65676
635.....66386
648 .....63013, 63666, 64392
679.....65028, 66390

REMINDERS

The items in this list were editorially compiled as an aid to Federal Register users. Inclusion or exclusion from this list has no legal significance.

RULES GOING INTO EFFECT DECEMBER 27, 2001

DEFENSE DEPARTMENT

Federal Acquisition Regulation (FAR):

Contractor responsibility, labor relations costs, and costs relating to legal and other proceedings; published 12-27-01

Revocation; published 12-27-01

ENVIRONMENTAL PROTECTION AGENCY

Pesticides; tolerances in food, animal feeds, and raw agricultural commodities:

Halosulfuron-methyl; published 12-27-01

Imazamox; published 12-27-01

Pymetrozine; published 12-27-01

Rhodamine B; published 12-27-01

FEDERAL EMERGENCY MANAGEMENT AGENCY

Flood insurance program:

Flood maps; future-conditions flood hazard information; published 11-27-01

FEDERAL TRADE COMMISSION

Appliances, consumer; energy consumption and water use information in labeling and advertising:

Comparability ranges—

Compact dishwashers, etc.; published 9-28-01

GENERAL SERVICES ADMINISTRATION

Federal Acquisition Regulation (FAR):

Contractor responsibility, labor relations costs, and costs relating to legal and other proceedings; published 12-27-01

Revocation; published 12-27-01

HEALTH AND HUMAN SERVICES DEPARTMENT

Food and Drug Administration

Animal drugs, feeds, and related products:

Sponsor name and address changes—

Phibro Animal Health; published 12-27-01

INTERIOR DEPARTMENT

Surface Mining Reclamation and Enforcement Office

Permanent program and abandoned mine land reclamation plan submissions:

Iowa; published 12-27-01

Pennsylvania; published 12-27-01

NATIONAL AERONAUTICS AND SPACE ADMINISTRATION

Federal Acquisition Regulation (FAR):

Contractor responsibility, labor relations costs, and costs relating to legal and other proceedings; published 12-27-01

Revocation; published 12-27-01

PERSONNEL MANAGEMENT OFFICE

Federal Personnel Manual abolished and references removed; technical amendments; published 12-27-01

TRANSPORTATION DEPARTMENT

Federal Aviation Administration

Airworthiness directives:

Cessna; published 11-15-01

SOCATA-Groupe Aerospatiale; published 11-19-01

Class D airspace; published 9-21-01

Class E airspace; published 8-29-01

Class E airspace; correction; published 11-13-01

Class E5 airspace; published 10-25-01

IFR altitudes; published 11-7-01

Restricted areas; published 10-25-01

VETERANS AFFAIRS DEPARTMENT

Adjudication; pensions, compensation, dependency, etc.:

Filipino veterans' benefits improvements; published 12-27-01

COMMENTS DUE NEXT WEEK

AGRICULTURE DEPARTMENT

Agricultural Marketing Service

Raisins produced from grapes grown in—

California; comments due by 1-3-02; published 12-19-01 [FR 01-31321]

AGRICULTURE DEPARTMENT

Animal and Plant Health Inspection Service

Exportation and importation of animals and animal products:

Bovine spongiform encephalopathy; disease status change—

Greece; comments due by 12-31-01; published 10-30-01 [FR 01-27263]

Plant-related quarantine, domestic:

Oriental fruit fly; comments due by 12-31-01; published 11-1-01 [FR 01-27460]

AGRICULTURE DEPARTMENT

Food Safety and Inspection Service

Pizza identity standards; elimination; comments due by 1-2-02; published 11-2-01 [FR 01-27542]

COMMERCE DEPARTMENT

National Oceanic and Atmospheric Administration

Endangered and threatened species:

Sea turtle conservation requirements

Sea turtle mortality reduction; hearing; comments due by 12-31-01; published 11-19-01 [FR 01-28877]

DEFENSE DEPARTMENT

Acquisition regulations:

Anticompetitive teaming; comments due by 12-31-01; published 11-1-01 [FR 01-27370]

ENVIRONMENTAL PROTECTION AGENCY

Air pollution control; new motor vehicles and engines:

Nonroad compression-ignition engines, new and in-use; emissions control—

Diesel emissions standards; Staff Technical Paper availability; comments due by 1-4-02; published 11-20-01 [FR 01-28856]

ENVIRONMENTAL PROTECTION AGENCY

Air programs:

Fuels and fuel additives—

Composition of additives certified under Gasoline Deposit Control Program; variability requirements revisions; comments due by 1-4-02; published 11-5-01 [FR 01-27588]

ENVIRONMENTAL PROTECTION AGENCY

Air programs:

Fuels and fuel additives—

Composition of additives certified under Gasoline Deposit Control Program; variability requirements revisions; comments due by 1-4-02; published 11-5-01 [FR 01-27589]

Reformulated gasoline terminal receipt date; comments due by 1-2-02; published 12-3-01 [FR 01-29777]

ENVIRONMENTAL PROTECTION AGENCY

Air programs; approval and promulgation; State plans for designated facilities and pollutants:

Illinois; comments due by 12-31-01; published 11-30-01 [FR 01-29774]

ENVIRONMENTAL PROTECTION AGENCY

Air programs; approval and promulgation; State plans for designated facilities and pollutants:

Illinois; comments due by 12-31-01; published 11-30-01 [FR 01-29775]

Air quality implementation plans; approval and promulgation; various States:

Illinois; comments due by 12-31-01; published 11-30-01 [FR 01-29662]

ENVIRONMENTAL PROTECTION AGENCY

Air quality implementation plans; approval and promulgation; various States:

Illinois; comments due by 12-31-01; published 11-30-01 [FR 01-29663]

ENVIRONMENTAL PROTECTION AGENCY

Air quality implementation plans; approval and promulgation; various States:

Illinois; comments due by 12-31-01; published 11-30-01 [FR 01-29656]

ENVIRONMENTAL PROTECTION AGENCY

Air quality implementation plans; approval and promulgation; various States:

Illinois; comments due by 12-31-01; published 11-30-01 [FR 01-29655]

ENVIRONMENTAL PROTECTION AGENCY

Air quality implementation plans; approval and promulgation; various States:

Indiana; comments due by 12-31-01; published 11-30-01 [FR 01-29649]

ENVIRONMENTAL PROTECTION AGENCY

Air quality implementation plans; approval and promulgation; various States:

Indiana; comments due by 12-31-01; published 11-30-01 [FR 01-29648]

ENVIRONMENTAL PROTECTION AGENCY

Air quality implementation plans; approval and promulgation; various States:

Missouri; comments due by 12-31-01; published 11-30-01 [FR 01-29651]

ENVIRONMENTAL PROTECTION AGENCY

Air quality implementation plans; approval and promulgation; various States:

Missouri; comments due by 12-31-01; published 11-30-01 [FR 01-29650]

ENVIRONMENTAL PROTECTION AGENCY

Air quality implementation plans; approval and promulgation; various States:

Missouri; comments due by 1-4-02; published 12-5-01 [FR 01-30102]

Hazardous waste:

Identification and listing—

Exclusions; comments due by 1-3-02; published 11-19-01 [FR 01-28624]

ENVIRONMENTAL PROTECTION AGENCY

Hazardous waste:

Identification and listing—

Mixture and derived-from rules; treatment, storage, or disposal; comments due by 1-2-02; published 12-3-01 [FR 01-29958]

ENVIRONMENTAL PROTECTION AGENCY

Superfund program:

National oil and hazardous substances contingency plan—

National priorities list update; comments due by 12-31-01; published 11-30-01 [FR 01-29552]

ENVIRONMENTAL PROTECTION AGENCY

Superfund program:

National oil and hazardous substances contingency plan—

National priorities list update; comments due by 12-31-01; published 11-30-01 [FR 01-29553]

FEDERAL COMMUNICATIONS COMMISSION

Common carrier services:

Commercial mobile radio services—

Wireless enhanced 911 service conditions; public safety answering point clarification; Richardson, TX; comments due by 1-2-02; published 11-2-01 [FR 01-27605]

Federal-State Joint Board on Universal Service—

Lifeline and Link-Up service for low-income customers; comments due by 12-31-01; published 10-31-01 [FR 01-27229]

Non-price cap incumbent local exchange carriers and interexchange carriers; interstate services; Multi-Association Group regulatory plan; comments due by 12-31-01; published 11-30-01 [FR 01-29740]

Interconnection—

Unbundled network elements and interconnection; performance measurements and standards; comments due by 12-31-01; published 11-30-01 [FR 01-29746]

Digital television stations; table of assignments:

New Mexico; comments due by 12-31-01; published 11-9-01 [FR 01-28107]

FEDERAL EMERGENCY MANAGEMENT AGENCY

National Flood Insurance Program:

Increased rates for coverage; comments due by 1-2-02; published 12-3-01 [FR 01-29747]

GENERAL SERVICES ADMINISTRATION

Federal Management Regulation:

Annual real property inventories; comments due by 1-2-02; published 11-2-01 [FR 01-27609]

INTERIOR DEPARTMENT

Indian Affairs Bureau

Tribal government:

Certificate of degree of Indian or Alaska Native blood; documentation requirements and filing, processing, and issuing requirements and standards; comments due by 12-31-01; published 6-25-01 [FR 01-15827]

INTERIOR DEPARTMENT

Land Management Bureau

Minerals management:

Mining claims under general mining laws; surface management; comments due by 12-31-01; published 10-30-01 [FR 01-27075]

INTERIOR DEPARTMENT

Fish and Wildlife Service

Endangered and threatened species:

Carson wandering skipper; comments due by 12-31-01; published 11-29-01 [FR 01-29613]

INTERIOR DEPARTMENT

Surface Mining Reclamation and Enforcement Office

Permanent program and abandoned mine land reclamation plan submissions:

Kansas; comments due by 12-31-01; published 11-30-01 [FR 01-29759]

JUSTICE DEPARTMENT

Prisons Bureau

Inmate control, custody, care, etc.:

National security; prevention of acts of violence and terrorism; comments due by 12-31-01; published 10-31-01 [FR 01-27472]

LABOR DEPARTMENT

Labor-Management Standards Office

Federal contractors and subcontractors:

Employee rights concerning union dues or fees payment

Duplicate copies of comments requested due to mail delivery problems; comments due by 1-2-02; published 12-18-01 [FR 01-31210]

LIBRARY OF CONGRESS

Copyright Office, Library of Congress

Copyright office and procedures:

Materials delayed due to disruption or suspension of postal or other transportation or communications services; comments due by 1-3-02; published 12-4-01 [FR 01-30013]

INTERIOR DEPARTMENT

National Indian Gaming Commission

Federal claims collection; comments due by 1-4-02; published 11-20-01 [FR 01-28693]

NUCLEAR REGULATORY COMMISSION

Domestic licensing proceedings and issuance of orders; practice rules:

Official records; availability; comments due by 12-31-01; published 10-17-01 [FR 01-26114]

Production and utilization facilities; domestic licensing:

Light-water-cooled power reactors; combustible gas control systems; standards; comments due by 12-31-01; published 11-14-01 [FR 01-28398]

Production and utilization facilities; domestic licensing; and radiation protection standards:

Nuclear power plants decommissioning; entombment options for power reactors; comments due by 12-31-01; published 10-16-01 [FR 01-25958]

Production and utilization facilities; domestic licensing:

Structures, systems, and components; risk-informed treatment; comments due by 12-31-01; published 11-29-01 [FR 01-29584]

NUCLEAR REGULATORY COMMISSION

Spent nuclear fuel and high-level radioactive waste; independent storage; licensing requirements:

Approved spent fuel storage casks; list; comments due by 12-31-01; published 11-29-01 [FR 01-29443]

NUCLEAR REGULATORY COMMISSION

Spent nuclear fuel and high-level radioactive waste; independent storage; licensing requirements:

Approved spent fuel storage casks; list; comments due by 12-31-01; published 11-29-01 [FR 01-29444]

PERSONNEL MANAGEMENT OFFICE

Absence and leave:

Restored annual leave use due to response to national emergency resulting from terrorist attacks; comments due by 1-2-02; published 11-2-01 [FR 01-27518]

TRANSPORTATION DEPARTMENT

Federal Aviation Administration

Air carrier certification and operations:

Collision avoidance systems; comments due by 12-31-01; published 11-1-01 [FR 01-27340]

Airworthiness directives:

Aerostar Aircraft Corp.; comments due by 1-2-02; published 10-24-01 [FR 01-26714]

TRANSPORTATION DEPARTMENT

Federal Aviation Administration

Airworthiness directives:

Airbus; comments due by 1-4-02; published 12-5-01 [FR 01-30082]

TRANSPORTATION DEPARTMENT

Federal Aviation Administration

Airworthiness directives:

Boeing; comments due by 12-31-01; published 10-31-01 [FR 01-27188]

TRANSPORTATION DEPARTMENT

Federal Aviation Administration

Airworthiness directives:

Boeing; comments due by 1-3-02; published 11-19-01 [FR 01-28796]

Eurocopter France; comments due by 12-31-01; published 10-31-01 [FR 01-26964]

TRANSPORTATION DEPARTMENT

Federal Aviation Administration

Airworthiness directives:

Fokker; comments due by 1-4-02; published 12-5-01 [FR 01-30081]

TRANSPORTATION DEPARTMENT

Federal Aviation Administration

Airworthiness directives:

General Electric Co.; comments due by 12-31-01; published 10-30-01 [FR 01-27191]

Pilatus Britten-Norman Ltd.; comments due by 1-3-02; published 11-27-01 [FR 01-29394]

Pratt & Whitney; comments due by 12-31-01; published 11-1-01 [FR 01-27432]

Class D airspace; comments due by 1-2-02; published 12-3-01 [FR 01-29887]

TRANSPORTATION DEPARTMENT

National Highway Traffic Safety Administration

Motor vehicle safety standards:

Child restraint systems—

Labels and instructions; simplification; comments due by 1-2-02; published 11-2-01 [FR 01-27545]

Labels and instructions; simplification; correction; comments due by 1-2-02; published 11-29-01 [FR 01-29637]

TREASURY DEPARTMENT

Privacy Act; implementation; comments due by 12-31-01; published 11-30-01 [FR 01-29710]

VETERANS AFFAIRS DEPARTMENT

Disabilities rating sechedule:

Ankylosis and limitation of motion of fingers and thumb; comments due by 1-2-02; published 11-2-01 [FR 01-27426]

LIST OF PUBLIC LAWS

This is a continuing list of public bills from the current session of Congress which have become Federal laws. It may be used in conjunction with ''P L U S'' (Public Laws Update Service) on 202–523–6641. This list is also available online at *http://www.nara.gov/fedreg/plawcurr.html*.

The text of laws is not published in the **Federal Register** but may be ordered in ''slip law'' (individual pamphlet) form from the Superintendent of Documents, U.S. Government Printing Office, Washington, DC 20402 (phone, 202–512–1808). The text will also be made available on the Internet from GPO Access at *http://www.access.gpo.gov/nara/nara005.html*. Some laws may not yet be available.

H.R. 717/P.L. 107–84

Muscular Dystrophy Community Assistance, Research and Education Amendments of 2001 (Dec. 18, 2001; 115 Stat. 823)

H.R. 1766/P.L. 107–85

To designate the facility of the United States Postal Service located at 4270 John Marr Drive in Annandale, Virginia, as the ''Stan Parris Post Office Building''. (Dec. 18, 2001; 115 Stat. 831)

H.R. 2261/P.L. 107–86

To designate the facility of the United States Postal Service located at 2853 Candler Road in Decatur, Georgia, as the ''Earl T. Shinhoster Post Office''. (Dec. 18, 2001; 115 Stat. 832)

H.R. 2299/P.L. 107–87

Department of Transportation and Related Agencies Appropriations Act, 2002 (Dec. 18, 2001; 115 Stat. 833; 42 pages)

H.R. 2454/P.L. 107–88

To redesignate the facility of the United States Postal Service located at 5472 Crenshaw Boulevard in Los Angeles, California, as the ''Congressman Julian C. Dixon Post Office''. (Dec. 18, 2001; 115 Stat. 875)

H.J. Res. 71/P.L. 107–89

Amending title 36, United States Code, to designate September 11 as Patriot Day. (Dec. 18, 2001; 115 Stat. 876)

Last List December 18, 2001

Public Laws Electronic Notification Service (PENS)

PENS is a free electronic mail notification service of newly enacted public laws. To subscribe, go to *http://hydra.gsa.gov/archives/publaws-l.html* or send E-mail to **listserv@listserv.gsa.gov** with the following text message:

SUBSCRIBE PUBLAWS-L Your Name.

Note: This service is strictly for E-mail notification of new laws. The text of laws is not available through this service. **PENS** cannot respond to specific inquiries sent to this address.