AUTHENTICATED
U.S. GOVERNMENT
INFORMATION
GPO

# Federal Register

12–15–00 Friday
Vol. 65 No. 242 Dec. 15, 2000
Pages 78403–78894

The **FEDERAL REGISTER** is published daily, Monday through Friday, except official holidays, by the Office of the Federal Register, National Archives and Records Administration, Washington, DC 20408, under the Federal Register Act (44 U.S.C. Ch. 15) and the regulations of the Administrative Committee of the Federal Register (1 CFR Ch. I). The Superintendent of Documents, U.S. Government Printing Office, Washington, DC 20402 is the exclusive distributor of the official edition.

The **Federal Register** provides a uniform system for making available to the public regulations and legal notices issued by Federal agencies. These include Presidential proclamations and Executive Orders, Federal agency documents having general applicability and legal effect, documents required to be published by act of Congress, and other Federal agency documents of public interest.

Documents are on file for public inspection in the Office of the Federal Register the day before they are published, unless the issuing agency requests earlier filing. For a list of documents currently on file for public inspection, see http://www.nara.gov/fedreg.

**The seal of the National Archives and Records Administration authenticates the Federal Register** as the official serial publication established under the Federal Register Act. Under 44 U.S.C. 1507, the contents of the **Federal Register** shall be judicially noticed.

The **Federal Register** is published in paper and on 24x microfiche. It is also available online at no charge as one of the databases on GPO Access, a service of the U.S. Government Printing Office.

The online edition of the **Federal Register** is issued under the authority of the Administrative Committee of the Federal Register as the official legal equivalent of the paper and microfiche editions (44 U.S.C. 4101 and 1 CFR 5.10). It is updated by 6 a.m. each day the **Federal Register** is published and it includes both text and graphics from Volume 59, Number 1 (January 2, 1994) forward.

GPO Access users can choose to retrieve online **Federal Register** documents as TEXT (ASCII text, graphics omitted), PDF (Adobe Portable Document Format, including full text and all graphics), or SUMMARY (abbreviated text) files. Users should carefully check retrieved material to ensure that documents were properly downloaded.

On the World Wide Web, connect to the **Federal Register** at http://www.access.gpo.gov/nara. Those without World Wide Web access can also connect with a local WAIS client, by Telnet to swais.access.gpo.gov, or by dialing (202) 512-1661 with a computer and modem. When using Telnet or modem, type swais, then log in as guest with no password.

For more information about GPO Access, contact the GPO Access User Support Team by E-mail at gpoaccess@gpo.gov; by fax at (202) 512–1262; or call (202) 512–1530 or 1–888–293–6498 (toll free) between 7 a.m. and 5 p.m. Eastern time, Monday–Friday, except Federal holidays.

The annual subscription price for the **Federal Register** paper edition is $638, or $697 for a combined **Federal Register,** Federal Register Index and List of CFR Sections Affected (LSA) subscription; the microfiche edition of the **Federal Register** including the Federal Register Index and LSA is $253. Six month subscriptions are available for one-half the annual rate. The charge for individual copies in paper form is $9.00 for each issue, or $9.00 for each group of pages as actually bound; or $2.00 for each issue in microfiche form. All prices include regular domestic postage and handling. International customers please add 25% for foreign handling. Remit check or money order, made payable to the Superintendent of Documents, or charge to your GPO Deposit Account, VISA, MasterCard or Discover. Mail to: New Orders, Superintendent of Documents, P.O. Box 371954, Pittsburgh, PA 15250–7954.

There are no restrictions on the republication of material appearing in the **Federal Register.**

**How To Cite This Publication:** Use the volume number and the page number. Example: 65 FR 12345.

## SUBSCRIPTIONS AND COPIES

| | |
|---|---|
| **PUBLIC** | |
| **Subscriptions:** | |
| Paper or fiche | **202–512–1800** |
| Assistance with public subscriptions | **512–1806** |
| **General online information** | **202–512–1530; 1–888–293–6498** |
| **Single copies/back copies:** | |
| Paper or fiche | **512–1800** |
| Assistance with public single copies | **512–1803** |
| **FEDERAL AGENCIES** | |
| **Subscriptions:** | |
| Paper or fiche | **523–5243** |
| Assistance with Federal agency subscriptions | **523–5243** |

Printed on recycled paper.

# Contents

**Federal Register**

Vol. 65, No. 242

Friday, December 15, 2000

**Agricultural Research Service**
NOTICES
Patent licenses; non-exclusive, exclusive, or partially exclusive:
Scenturion, Inc., 78463

**Agriculture Department**
*See* Agricultural Research Service
*See* Commodity Credit Corporation
*See* Farm Service Agency
*See* Forest Service

**Army Department**
NOTICES
Environmental statements; notice of intent:
Army Transformation Campaign Plan, 78477

**Blind or Severely Disabled, Committee for Purchase From People Who Are**
*See* Committee for Purchase From People Who Are Blind or Severely Disabled

**Commerce Department**
*See* International Trade Administration

**Committee for Purchase From People Who Are Blind or Severely Disabled**
NOTICES
Procurement list; additions and deletions, 78466–78467

**Commodity Credit Corporation**
RULES
Loan and purchase programs:
Tobacco, 78405–78407
NOTICES
Agency information collection activities:
Proposed collection; comment request, 78463–78464

**Commodity Futures Trading Commission**
NOTICES
Agency information collection activities:
Proposed collection; comment request, 78475–78476

**Copyright Office, Library of Congress**
PROPOSED RULES
Copyright office and procedures:
Sound recordings, public performance; service definition
Correction, 78434

**Customs Service**
PROPOSED RULES
Financial and accounting procedure:
Harbor Maintenance Fee refunds and other claims against Customs; time limitation, 78430–78431

**Defense Department**
*See* Army Department
NOTICES
Environmental statements; availability, etc.:
National Missile Defense Deployment, 78476

**Education Department**
NOTICES
Grants and cooperative agreements; availability, etc.:
Postsecondary education—
Preparing Tomorrow's Teachers to Use Technology Program, 78477–78478
Reports and guidance documents; availability, etc.:
Use of tests when making high-stakes decisions for students; resource guide for educators and policy makers, 78478–78479

**Employment Standards Administration**
NOTICES
Minimum wages for Federal and federally-assisted construction; general wage determination decisions, 78514–78515

**Energy Department**
*See* Federal Energy Regulatory Commission

**Environmental Protection Agency**
RULES
Air quality implementation plans; approval and promulgation; various States:
Maryland, 78416–78418
Pennsylvania, 78418–78422
Toxic substances:
Health effects test guidelines, 78745–78819
PROPOSED RULES
Air quality implementation plans; approval and promulgation; various States:
California, 78434–78439
Pennsylvania, 78439
NOTICES
Agency information collection activities:
Proposed collection; comment request, 78484–78485
Environmental statements; availability, etc.:
Agency statements—
Comment availability, 78486–78487
Weekly receipts, 78485–78486
Grants and cooperative agreements; availability, etc.:
Mobile Source Outreach Assistance Competition, 78487–78489
Pesticide, food, and feed additive petitions:
Rohm & Haas Co.; correction, 78491–78492
Pesticide programs:
Organophosphates; risk assessments and public participation in risk management—
Coumaphos, etc., 78489–78491
Pesticides; experimental use permits, etc.:
Mycogen Seeds, 78492–78493
Superfund program:
Prospective purchaser agreements—
Palmyra Atoll, 78493

**Executive Office of the President**
*See* Management and Budget Office
*See* Trade Representative, Office of United States

**Farm Service Agency**
RULES
Farm marketing quotas, acreage allotments, and production adjustments:
Tobacco, 78405–78407

**Federal Communications Commission**
PROPOSED RULES
Common carrier services:
Mandatory FCC Registration Number; adoption, 78455–78461

**Federal Energy Regulatory Commission**
NOTICES
Electric rate and corporate regulation filings:
Delmarva Power & Light Co. et al., 78481–78484
*Applications, hearings, determinations, etc.:*
Columbia Gas Transmission Corp., 78479–78480
Nicole Gas Production, Ltd., 78480–78481

**Federal Mine Safety and Health Review Commission**
NOTICES
Meetings; Sunshine Act, 78515–78516

**Federal Motor Carrier Safety Administration**
RULES
Practice and procedure:
Motor carriers, brokers, and freight forwarders; sanctions for failure to pay civil penalties, 78422–78429

**Federal Railroad Administration**
NOTICES
Exemption petitions, etc.:
South Carolina Railroad Museum, Inc., 78528

**Federal Reserve System**
PROPOSED RULES
Home mortgage disclosure (Regulation C):
Miscellaneous amendments; staff interpretation, 78655–78685

**Federal Trade Commission**
RULES
Industry guides:
Jewelry, precious metals, and pewter industries, 78737–78744
Practice and procedure:
Technical amendments, 78407–78409

**Financial Management Service**
*See* Fiscal Service

**Fiscal Service**
NOTICES
Agency information collection activities:
Proposed collection; comment request, 78533

**Fish and Wildlife Service**
NOTICES
Comprehensive conservation plans; availability, etc.:
Sevilleta Lake National Wildlife Refuge, NM, 78502–78503
Environmental statements; availability, etc.:
Incidental take permits—
Williamson County, TX; Bone Cave harvestman, 78503–78504

**Food and Drug Administration**
NOTICES
Harmonisation International Conference; guidelines availability:
Medicinal products in pediatric population; E11 clinical investigation, 78494–78495
Medical devices:
Class II devices; premarket notification exemptions, 78495–78496
Premarket approval applications, list; safety and effectiveness summaries availability, 78496–78497
Reports and guidance documents; availability, etc.:
Botanical drug products, 78497–78498

**Foreign Assets Control Office**
NOTICES
Victims of Trafficking and Violence Protection Act; implementation:
Payments to persons holding categories of judgments against Cuba or Iran, 78533–78534

**Forest Service**
NOTICES
Environmental statements; availability, etc.:
Hoosier National Forest, IN, 78464
Environmental statements; notice of intent:
Carson and Santa Fe National Forests, NM, 78464–78465
Dixie National Forest, UT, 78465–78466

**General Services Administration**
NOTICES
Environmental statements; availability, etc.:
Eugene/Springfield, OR; Federal courthouse and office building, 78494

**Health and Human Services Department**
*See* Food and Drug Administration
*See* National Institutes of Health

**Housing and Urban Development Department**
NOTICES
Agency information collection activities:
Proposed collection; comment request, 78498
Grants and cooperative agreements; availability, etc.:
Facilities to assist homeless—
Excess and surplus Federal property, 78499–78500
Mortgage and loan insurance programs:
Credit Watch Termination Initiative; list of mortgagees whose Origination Approval Agreements have been terminated, 78501–78502

**Indian Affairs Bureau**
NOTICES
Environmental statements; availability, etc.:
Colville Confederated Tribes, Colville Indian Reservation, WA; integrated resource management plan, 78504–78505

**Interior Department**
*See* Fish and Wildlife Service
*See* Indian Affairs Bureau
*See* Land Management Bureau
*See* Minerals Management Service
*See* National Park Service
*See* Reclamation Bureau
*See* Surface Mining Reclamation and Enforcement Office
RULES
Indian Self-Determination and Education Assistance Act:
Tribal Self-Governance Program, 78687–78735

**Internal Revenue Service**
RULES
Procedure and administration:
Combat zone service and Presidentially declared disaster; tax-related deadlines postponed, 78409–78413

**International Trade Administration**
NOTICES
Antidumping:
Cold-rolled carbon steel flat products from—
Korea, 78473
Fresh Atlantic Salmon from—
Chile, 78473–78475
Antidumping and countervailing duties:
Carbon steel products from—
Various countries, 78467–78473
Countervailing duties:
Honey from—
Argentina, 78475

**Justice Department**
RULES
Organization, functions, and authority delegations:
Authority to compromise and close civil claims; gross amount of original claim, definition, 78413–78414

**Labor Department**
*See* Employment Standards Administration
NOTICES
Agency information collection activities:
Submission for OMB review; comment request, 78513–78514

**Land Management Bureau**
PROPOSED RULES
Minerals management:
Fee changes, 78440–78455
NOTICES
Coal leases, exploration licenses, etc.:
Wyoming, 78505–78506
Meetings:
Resource Advisory Councils—
Northeastern Great Basin, 78506

**Library of Congress**
*See* Copyright Office, Library of Congress

**Management and Budget Office**
RULES
Prompt Payment Act; implementation:
Interest penalties under cost-reimbursement contract for services more than 30 days after receiving proper invoice, 78403–78405
NOTICES
Federal Financial Accounting Standards:
Federal Credit Reform Act; direct loan and loan guarantee subsidies; document availability, 78517
Non-valued seized and forfeited property reporting; document availability, 78517

**Maritime Administration**
NOTICES
Coastwise trade laws; administrative waivers:
GINGERSNAP, 78528–78529
REFLECTION, 78529–78530
SEASCAPE, 78530–78531

**Minerals Management Service**
PROPOSED RULES
Outer Continental Shelf; oil, gas, and sulphur operations:
Affected State; definition removed, 78432–78434
Royalty management:
Rate relief or reduction; deep water royalty relief for post-2000 OCS oil and gas leases, 78431–78432
NOTICES
Agency information collection activities:
Submission for OMB review; comment request, 78506–78508
Environmental statements; availability, etc.:
Western Gulf of Mexico OCS—
Lease sales, 78508

**Mine Safety and Health Federal Review Commission**
*See* Federal Mine Safety and Health Review Commission

**National Highway Traffic Safety Administration**
PROPOSED RULES
Motor vehicle safety standards:
Fuel system integrity, 78461–78462
NOTICES
Motor vehicle safety standards; exemption petitions, etc.:
Continental General Tire, Inc., 78531

**National Institutes of Health**
NOTICES
Recombinant DNA molecules research:
Actions under guidelines
Proposed; correction, 78535

**National Park Service**
NOTICES
Concession contract negotiations:
Katmai National Park and Preserve, AK, 78508–78509
Concession contracts and permits:
Extension of expiring contracts for up to one year; correction, 78509
Environmental statements; availability, etc.:
Tallgrass Prairie National Preserve, KS, 78509–78512

**Nuclear Regulatory Commission**
NOTICES
Agency information collection activities:
Proposed collection; comment request, 78516–78517

**Office of Management and Budget**
*See* Management and Budget Office

**Office of United States Trade Representative**
*See* Trade Representative, Office of United States

**Pension Benefit Guaranty Corporation**
RULES
Single employer plans:
Allocation of assets—
Interest assumptions for valuing and paying benefits, 78414–78416
NOTICES
Multiemployer plans:
Interest rates and assumptions, 78517–78518

**Postal Service**
RULES
Domestic Mail Manual:
Rate, fee, and classification changes, 78537–78654

**Public Debt Bureau**
*See* Fiscal Service

**Public Health Service**
*See* Food and Drug Administration
*See* National Institutes of Health

**Reclamation Bureau**
NOTICES
Environmental statements; availability, etc.:
Colorado River interim surplus criteria, 78512–78513

**Securities and Exchange Commission**
NOTICES
Meetings; Sunshine Act, 78519
Options Price Reporting Authority:
Consolidated options last sale reports and quotation information plan; participation fee payable by new parties, 78519–78520
Self-regulatory organizations; proposed rule changes:
Depository Trust Co., 78520–78521
National Association of Securities Dealers, Inc., 78521–78522
New York Stock Exchange, Inc., 78523–78524
Pacific Exchange, Inc., 78821–78893
Philadelphia Stock Exchange, Inc., 78524–78527
*Applications, hearings, determinations, etc.:*
Ramco Energy plc, 78518
Resource Bankshares Corp., 78518–78519

**Small Business Administration**
NOTICES
Disaster loan areas:
Michigan, 78527–78528

**Surface Mining Reclamation and Enforcement Office**
RULES
Permanent program and abandoned mine land reclamation plan submissions:
Maryland; correction, 78416
NOTICES
Agency information collection activities:
Proposed collection; comment request, 78513

**Surface Transportation Board**
NOTICES
Railroad operation, acquisition, construction, etc.:
Maine Coast Railroad Corp. et al., 78531–78532
Union Pacific Railroad Co., 78532

**Trade Representative, Office of United States**
NOTICES
Caribbean Basin Economic Recovery Act:
Beneficiary countries; preferential treatment list, 78528

**Transportation Department**
*See* Federal Motor Carrier Safety Administration
*See* Federal Railroad Administration
*See* Maritime Administration
*See* National Highway Traffic Safety Administration
*See* Surface Transportation Board

**Treasury Department**
*See* Customs Service
*See* Fiscal Service
*See* Foreign Assets Control Office
*See* Internal Revenue Service
NOTICES
Agency information collection activities:
Submission for OMB review; comment request, 78532–78533

---

**Separate Parts In This Issue**

**Part II**
Postal Service, 78537–78654

**Part III**
Federal Reserve System, 78655–78685

**Part IV**
Department of the Interior, 78687–78735

**Part V**
Federal Trade Commission, 78737–78744

**Part VI**
Environmental Protection Agency, 78745–78819

**Part VII**
Securities and Exchange Commission, 78821–78893

---

**Reader Aids**
Consult the Reader Aids section at the end of this issue for phone numbers, online resources, finding aids, reminders, and notice of recently enacted public laws.

## CFR PARTS AFFECTED IN THIS ISSUE

A cumulative list of the parts affected this month can be found in the Reader Aids section at the end of this issue.


**5 CFR**
1315.....78403

**7 CFR**
723.....78405
1464.....78405

**12 CFR**
**Proposed Rules:**
203.....78656

**16 CFR**
0.....78407
23.....78738

**19 CFR**
**Proposed Rules:**
24.....78430

**25 CFR**
1000.....78688

**26 CFR**
301.....78409

**28 CFR**
0.....78413

**29 CFR**
4022.....78414
4044.....78414

**30 CFR**
920.....78416
**Proposed Rules:**
203.....78431
256.....78432

**37 CFR**
**Proposed Rules:**
201.....78434

**39 CFR**
111.....78538

**40 CFR**
52 (2 documents) .....78416, 78418
799.....78746
**Proposed Rules:**
52 (2 documents) .....78434, 78439

**43 CFR**
**Proposed Rules:**
3000.....78440
3100.....78440
3200.....78440
3400.....78440
3500.....78440
3600.....78440
3800.....78440

**47 CFR**
**Proposed Rules:**
1.....78455
21.....78455
61.....78455
73.....78455
74.....78455
76.....78455

**49 CFR**
385.....78422
386.....78422
**Proposed Rules:**
571.....78461

# Rules and Regulations

Federal Register
Vol. 65, No. 242
Friday, December 15, 2000

This section of the FEDERAL REGISTER contains regulatory documents having general applicability and legal effect, most of which are keyed to and codified in the Code of Federal Regulations, which is published under 50 titles pursuant to 44 U.S.C. 1510.

The Code of Federal Regulations is sold by the Superintendent of Documents. Prices of new books are listed in the first FEDERAL REGISTER issue of each week.

## OFFICE OF MANAGEMENT AND BUDGET

## 5 CFR Part 1315

## Prompt Payment

**AGENCY:** Office of Management and Budget, Executive Office of the President.

**ACTION:** Interim final rule with request for comments.

**SUMMARY:** The Office of Management and Budget (OMB) is issuing an interim final revision to its rules on the Prompt Payment Act (PPA) to implement Section 1010 of the National Defense Authorization Act for Fiscal Year 2001. Section 1010 requires agencies to pay an interest penalty whenever they make an interim payment under a cost-reimbursement contract for services more than 30 days after the agency receives a proper invoice for payment from the contractor.

**DATES:** *Effective Date:* This interim final rule is effective December 15, 2000.

*Applicability Dates:* This interim final rule shall apply to all interim payment requests received under cost-reimbursement service contracts awarded on or after December 15, 2000. At the discretion of the agency, this interim final rule may be applied to interim payment requests received under cost-reimbursement service contracts awarded before December 15, 2000. However, no interest penalty shall accrue under this rule for any delay in payment that occurs prior to December 15, 2000.

*Comment Date:* Comments must be received by February 13, 2001 and should be directed to the Department of the Treasury at the address identified below.

**ADDRESSES:** All comments should be addressed to Cynthia L. Johnson, Director, Cash Management Policy and Planning Division, Financial Management Service, U.S. Department of the Treasury, Room 420, 401 14th Street SW., Washington, DC 20227.

Copies of the current PPA regulation and other information are available from the Prompt Payment web site at *http://www.fms.treas.gov/prompt/index.html.*

**FOR FURTHER INFORMATION CONTACT:** Sally Phillips, Senior Financial Program Specialist, on (202) 874–7106; Matthew Helfrich, Financial Program Specialist, on (202) 874–6749; Martha Thomas-Mitchell, Financial Program Specialist, on (202) 874–6757; or Cynthia L. Johnson, Director, Cash Management Policy and Planning Division, on (202) 874–6590.

**SUPPLEMENTARY INFORMATION:**

### I. Background

Contractors who are awarded cost-reimbursement contracts are generally authorized to seek reimbursement, including reimbursement during the course of the contract (''interim payments''), for the allowable costs they incur in the performance of the contract. In the National Defense Authorization Act for Fiscal Year 2001, Public Law 106–398, 114 Stat. 1654, Congress imposed a new statutory requirement on agencies to pay an interest penalty on interim payments that are made late under cost-reimbursement service contracts. This requirement is contained in Section 1010 of the Act—''Interest Penalties for Late Payment of Interim Payments Due Under Government Service Contracts.''

Specifically, under Section 1010(a), ''an agency acquiring services from a business concern under a cost-reimbursement contract requiring interim payments who does not pay the concern a required interim payment by the date that is 30 days after the date of the receipt of a proper invoice shall pay an interest penalty to the concern on the amount of the payment due.'' In addition, ''[t]he interest shall be computed as provided in section 3902(a) of title 31, United States Code,'' which is the interest provision of the Prompt Payment Act (PPA, 31 U.S.C. 3901, *et seq.*), and the agencies are to carry out the requirement ''[u]nder regulations prescribed'' by OMB. In turn, Section 1010(b) directs OMB to ''prescribe regulations to carry out this section,'' which ''shall be prescribed as part of'' OMB's regulations implementing the PPA. OMB's PPA regulations are now found at 5 CFR Part 1315 (prior to their 1999 codification, they were contained in OMB Circular A–125). See 64 FR 52580 (September 29, 1999). Section 1010(c) states that ''[t]he provisions of chapter 39 of title 31, United States Code [i.e., the PPA], shall apply to this section in the same manner as if this section were enacted as part of such chapter.''

Finally, Section 1010(d) states that ''Subsection (a) shall take effect on December 15, 2000. No interest shall accrue by reason of that subsection for any period before that date.''

This rule implements Section 1010 by making conforming revisions, on an interim final basis, to OMB's PPA regulations. In developing this rule, OMB has consulted with the Departments of Defense and Treasury, the General Services Administration, and other agencies. OMB requests comment on the interim final revisions, and will consider them in our development of the final rule.

*Agency Practices and Policies Regarding Interim Payments*

Until now, interim payments under cost-reimbursement service contracts have not been subject to PPA interest penalties. As a result of Section 1010, interim payments on cost-reimbursement service contracts will be subject to PPA interest penalties when the payment is not made ''by the date that is 30 days after the date of the receipt of a proper invoice.'' However, neither Section 1010 nor this interim final rule is intended to modify current agency practices or policies regarding dates for payment for interim payments on cost-reimbursement service contracts, other than to require—in accordance with Section 1010(a)—that PPA interest penalties be paid on interim payments that are made more than 30 days after the agency receives a proper invoice. In particular, Section 1010 leaves unaffected existing agency policies that call for these interim payments to be made well in advance of 30 days. For example, it is the policy of the Department of Defense to generally pay contractors 14 days or less after being billed for reimbursements on cost-reimbursement contracts. See Subpart 232.906 of the Department of Defense Supplement to the Federal Acquisition Regulation (DFARS), 48 CFR Chapter 2.

*Implementation*

Newly added Section 1315.20 of the PPA regulation makes clear that the requirements of Section 1010 are to be implemented on an accelerated basis. Section 1315.20 requires agencies to immediately apply the revisions made by this interim final rule to all interim payment requests received under cost-reimbursement service contracts awarded on or after December 15, 2000. This accelerated implementation schedule is intended to reinforce agency efforts to pay their bills in a timely manner. Prompt payment facilitates the government's ability to attract high quality contractors, and can reduce contractors' costs of doing business with the government, which can translate into lower prices for the products and services agencies acquire to meet their mission needs. For this reason, the rule also authorizes agencies, at their discretion, to apply the revisions to interim payment requests received under cost-reimbursement service contracts awarded prior to December 15, 2000. Agencies are authorized to issue modifications to contracts, as necessary, to conform them to the revisions made by this interim final rule. However, as required by Section 1010(d), no interest penalty shall accrue under this rule for any delay in payment that occurs prior to December 15, 2000.

Mandatory application of the revised rule to contracts awarded on or after the rule's effective date is consistent with implementation approaches previously taken by OMB in implementing PPA requirements. When OMB originally implemented the PPA in 1982, and when OMB in 1989 implemented the Act's 1988 amendments, new requirements generally applied to contracts that would be executed on or after the statutory effective date. See August 25, 1982 implementation of PPA, at 47 FR 37321, 37322 (preamble discussion) and 37324 (Circular A–125, Section 13—''Interest penalties will apply to payments made under contracts issued on or after October 1, 1982.''); December 21, 1989 implementation of 1988 amendments, at 54 FR 52700, 52713 (Circular A–125, Section 15—generally applying new requirements to ''payments under contracts awarded, contracts renewed, and contract options exercised on or after'' the statutory effective date). OMB believes this same implementation approach is suitable for Section 1010 and will best ensure that the requirements of Section 1010—which was recently enacted on October 30, 2000—are applied by agencies in an orderly and effective manner.

## II. Regulatory Flexibility Act, Unfunded Mandates Reform Act, Congressional Review Act, and Executive Orders 12866 and 12875

This interim final rule will not have a significant economic effect on a substantial number of small entities; the regulations implement Section 1010 of the National Defense Authorization Act for Fiscal Year 2001, which requires Federal agencies to pay an interest penalty whenever they make interim payments on cost-reimbursement service contracts more than 30 days after they receive a proper invoice. For purposes of the Unfunded Mandates Reform Act of 1995 (Public Law 104–4), as well as Executive Orders 12866 and 12875, the interim final rule will not significantly or uniquely affect small governments, and will not result in increased expenditures by State, local, and tribal governments, or by the private sector, of $100 million or more. Finally, the interim final rule is not a ''major rule'' under 5 U.S.C. Chapter 8; the rule will not have any of the effects set forth in 5 U.S.C. 804(2).

## III. Paperwork Reduction Act

The Paperwork Reduction Act does not apply to this interim final rule because the rule's changes do not impose new recordkeeping requirements or collections of information from offerors, contractors, or members of the public that require approval under 44 U.S.C. 3501, *et seq.* The information a contractor must submit in order to receive an interim payment under a cost-reimbursement service contract is addressed at Section 1315.9(b)(2) of the revised PPA regulations. Section 1315.9(b)(2) states that an interim payment request must correctly include all the information required by the contract or by agency procedures.

## IV. Determination To Issue an Interim Final Rule

This rule is being promulgated as an interim final rule in order to carry out Section 1010(a) of Public Law 106–398 on a timely basis. Section 1010(a) requires an agency, under regulations prescribed by the Director of OMB, to pay an interest penalty whenever the agency makes an interim payment under a cost-reimbursement contract for services that is more than 30 days after the agency receives a proper invoice for payment from the contractor. Section 1010(a) was enacted into law on October 30, 2000, when the President signed into law Public Law 106–398, the National Defense Authorization Act for Fiscal Year 2001. Section 1010(d) states that Section 1010(a) ''shall take effect on December 15, 2000,'' and Section 1010(b) directs OMB to ''prescribe regulations to carry out'' Section 1010. There is ''good cause'' under 5 U.S.C. 553(b) for OMB to issue this rule without prior public comment, because the issuance of a proposed rule to implement Section 1010(a) would have been ''impracticable'' due to the very short (45-day) period between the enactment and effective dates for Section 1010(a). Although this rule is being issued without prior opportunity for public comment, OMB is requesting comments on the interim final rule and will consider all comments received in our development of the final rule.

## List of Subjects in 5 CFR Part 1315

Administrative practice and procedure, Government contracts, Penalties, Reporting and recordkeeping requirements.

Dated: December 12, 2000.

**Sylvia M. Mathews,**

*Deputy Director.*

For reasons set out in the preamble, 5 CFR chapter III, part 1315 is amended as set forth below:

## Authority and Issuance

## PART 1315—PROMPT PAYMENT

1. The authority citation for part 1315 is revised to read as follows:

**Authority:** 31 U.S.C. chapter 39; Section 1010 of Public Law 106–398, 114 Stat. 1654.

2. Section 1315.2 is amended by revising paragraph (h) to read as follows:

### § 1315.2 Definitions.

* * * * *

(h) *Contract financing payments* means an authorized disbursement of monies prior to acceptance of goods or services including advance payments, progress payments based on cost, progress payments (other than under construction contracts) based on a percentage or stage of completion, payments on performance-based contracts and interim payments on cost-type contracts (other than under cost-reimbursement contracts for the acquisition of services). Contract financing payments do not include invoice payments, payments for partial deliveries, or lease and rental payments. Contract financing payments also do not include progress payments under construction contracts based on a percentage or stage of completion and interim payments under cost-reimbursement service contracts. For purposes of this part, interim payments

under a cost-reimbursement service contract are treated as invoice payments and subject to the requirements of this part, except as otherwise provided (see, *e.g.*, §§ 1315.4(d) and (e), and 1315.9(b)(1) and (c)).

* * * * *

3. Section 1315.4 is amended by revising paragraphs (d) and (e), revising paragraph (g)(1), redesignating paragraphs (g)(2) through (g)(4) as paragraphs (g)(3) through (g)(5), respectively, and adding a new paragraph (g)(2) to read as follows:

**§ 1315.4 Prompt payment standards and required notices to vendors.**

* * * * *

(d) *Receipt of goods and services.* Agencies will ensure that receipt is properly recorded at the time of delivery of goods or completion of services. This requirement does not apply to interim payments on cost-reimbursement service contracts except as otherwise required by agency regulations.

(e) *Acceptance.* Agencies will ensure that acceptance is executed as promptly as possible. Commercial items and services should not be subject to extended acceptance periods. Acceptance reports will be forwarded to the designated agency office by the fifth working day after acceptance. Unless other arrangements are made, acceptance reports will be stamped or otherwise annotated with the receipt date in the designated agency office. This requirement does not apply to interim payments on cost-reimbursement service contracts except as otherwise required by agency regulations.

* * * * *

(g) *Determining the payment due date.* (1) Except as provided in paragraphs (g)(2) through (5) of this section, the payment is due either:

(i) On the date(s) specified in the contract;

(ii) In accordance with discount terms when discounts are offered and taken (see § 1315.7);

(iii) In accordance with Accelerated Payment Methods (see § 1315.5); or

(iv) 30 days after the start of the payment period as specified in paragraph (f) of this section, if not specified in the contract, if discounts are not taken, and if accelerated payment methods are not used.

(2) *Interim payments under cost-reimbursement contracts for services.* The payment due date for interim payments under cost-reimbursement service contracts shall be 30 days after the date of receipt of a proper invoice.

* * * * *

4. Section 1315.5 is amended by adding a new paragraph (d) to read as follows:

**§ 1315.5 Accelerated payment methods.**

* * * * *

(d) *Interim payments under cost-reimbursement contracts for services.* For interim payments under cost-reimbursement service contracts, agency heads may make payments earlier than seven days prior to the payment due date in accordance with agency regulations or policies.

5. Section 1315.9 is amended by redesignating paragraphs (b) introductory text and (b)(1) through (b)(10) as paragraphs (b)(1) introductory text and (b)(1)(i) through (b)(1)(x), respectively, revising newly redesignated paragraph (b)(1) introductory text, adding a new paragraph (b)(2), and revising the introductory text of paragraph (c) to read as follows:

**§ 1315.9 Required documentation.**

* * * * *

(b)(1) Except for interim payment requests under cost-reimbursement service contracts, which are covered by paragraph (b)(2) of this section, the following correct information constitutes a proper invoice and is required as payment documentation:

* * * * *

(2) An interim payment request under a cost-reimbursement service contract constitutes a proper invoice for purposes of this part if it correctly includes all the information required by the contract or by agency procedures.

(c) Except for interim payment requests under cost-reimbursement service contracts, the following information from receiving reports, delivery tickets, and evaluated receipts is required as payment documentation:

* * * * *

6. Section 1315.10 is amended by revising paragraph (b)(1) to read as follows:

**§ 1315.10 Late payment interest penalties.**

* * * * *

(b) * * *

(1) Interest may be paid only after acceptance has occurred; when title passes to the government in a fast payment contract when title passing to the government constitutes acceptance for purposes of determining when interest may be paid; or when the payment is an interim payment under a cost-reimbursement service contract;

* * * * *

7. Add § 1315.20 to read as follows:

**§ 1315.20 Application of Section 1010 of the National Defense Authorization Act for Fiscal Year 2001.**

Section 1010 of the National Defense Authorization Act for Fiscal Year 2001 (Public Law 106–398, 114 Stat. 1654) requires an agency to pay an interest penalty whenever the agency makes an interim payment under a cost-reimbursement contract for services more than 30 days after the date the agency receives a proper invoice for payment from the contractor. This part implements Section 1010 and is applicable in the following manner:

(a) This part shall apply to all interim payment requests received under cost-reimbursement service contracts awarded on or after December 15, 2000.

(b) This part may be applied, at the discretion of the agency, to interim payment requests received under cost-reimbursement service contracts awarded before December 15, 2000. However, no interest penalty shall accrue under this part for any delay in payment that occurs prior to December 15, 2000.

(c) Agencies are authorized to issue modifications to contracts, as necessary, to conform them to the provisions in this part implementing Section 1010.

[FR Doc. 00–32007 Filed 12–14–00; 8:45 am]

BILLING CODE 3110–01–P

---

## DEPARTMENT OF AGRICULTURE

## Farm Service Agency

## 7 CFR Part 723

## Commodity Credit Corporation

## 7 CFR Part 1464

**RIN 0560–AF85**

## 2000 Marketing Quota and Price Support for Burley Tobacco

**AGENCIES:** Farm Service Agency and Commodity Credit Corporation, USDA.

**ACTION:** Final rule.

**SUMMARY:** The purpose of this final rule is to codify determinations made by the Secretary of Agriculture (Secretary) with respect to the 2000 crop of burley tobacco. In accordance with the Agricultural Adjustment Act of 1938, as amended (1938 Act), the Secretary determined the 2000 marketing quota for burley tobacco to be 247.4 million pounds. In accordance with the Agricultural Act of 1949, as amended (1949 Act), the Secretary determined the 2000 price support level to be 180.5 cents per pound. A number of related

determinations were made at the same time, which the rule affirms.

**EFFECTIVE DATE:** February 1, 2000.

**FOR FURTHER INFORMATION CONTACT:** Robert L. Tarczy, Tobacco and Peanuts Division, USDA, FSA, STOP 0514, 1400 Independence Avenue, SW., Washington, DC 20250–0514, telephone 202–720–5346. Copies of the cost-benefit assessment prepared for this rule can be obtained from Mr. Tarczy.

**SUPPLEMENTARY INFORMATION:**

### Executive Order 12866

This final rule has been determined to be significant for purposes of Executive Order 12866 and has been reviewed by OMB under Executive Order 12866.

### Federal Assistance Program

The title and number of the Federal Assistance Program, as found in the Catalog of Federal Domestic Assistance, to which this rule applies, are Commodity Loans and Purchases—10.051.

### Executive Order 12988

This final rule has been reviewed in accordance with Executive Order 12988. The provisions of this rule do not preempt State laws, are not retroactive, and do not involve administrative appeals.

### Regulatory Flexibility Act

It has been determined that the Regulatory Flexibility Act is not applicable to this final rule since neither the Farm Service Agency (FSA) nor the Commodity Credit Corporation (CCC) is required by 5 U.S.C. 553 or any other provision of law to publish a notice of proposed rulemaking with respect to the subject of these determinations.

### Paperwork Reduction Act

These proposed amendments do not contain information collections that require clearance by the Office of Management and Budget under the provisions of 44 U.S.C. chapter 35.

### Unfunded Federal Mandates

This rule contains no Federal mandates under the regulatory provisions of Title II of the Unfunded Mandate Reform Act of 1995 (UMRA) for State, local, and tribal governments or the private sector. Thus, this rule is not subject to the requirements of sections 202 and 205 of the UMRA.

### Statutory Background

This rule is issued pursuant to the provisions of the 1938 Act and the 1949 Act. Section 1108(c) of Pub. L. 99–272 provides that the determinations made in this rule are not subject to the provisions for public participation in rule making contained in 5 U.S.C. 553 or in any directive of the Secretary. Further, since this rule affirms existing determinations which are time-sensitive, the rule is made effective as of the date of the underlying determinations.

### Marketing Quota

Section 319(c)(3) of the 1938 Act provides, in part, that the national marketing quota for a marketing year (MY) for burley tobacco shall be quantity of such tobacco that is not more than 103 percent nor less than 97 percent of the total of: (1) the amount of burley tobacco that domestic manufacturers of cigarettes estimate they intend to purchase on U.S. auction markets or from producers, (2) the average quantity exported annually from the U.S. during the 3 marketing years immediately preceding the marketing year for which the determination is being made, and (3) the quantity, if any, that the Secretary, in the Secretary's discretion, determines necessary to adjust loan stocks to the reserve stock level.

The reserve stock level is defined in section 301(b)(14)(D) of the 1938 Act as the greater of 50 million pounds or 15 percent of the national marketing quota for burley tobacco for the marketing year immediately preceding the marketing year for which the level is being determined.

Section 320A of the 1938 Act provides that all domestic manufacturers of cigarettes with more than 1 percent of U.S. cigarette production and sales shall submit to the Secretary a statement of purchase intentions for the 2000 crop of burley tobacco by January 15, 2000. Five such manufacturers were required to submit such a statement for the 2000 crop and the total of their intended purchases for the 2000 crop is 242.5 million pounds. The 3-year average of exports is 159.1 million pounds.

The national marketing quota for the 1999 crop year was 452.9 million pounds. Thus, in accordance with section 301(b)(14)(D) of the 1938 Act, the reserve stock level for use in determining the 2000 marketing quota for burley tobacco is 67.9 million pounds.

As of January 30, 2000, the Burley Tobacco Growers Cooperative Association and Burley Stabilization Corporation had in their inventories 185.8 million pounds of burley tobacco net of deferred sales. The 1999-crop receipts are expected to total about 205 million pounds. However, any reduction in adjusting loan inventory to the reserve stock level for burley tobacco is limited by statute, to the greater of 35 million pounds or 50 percent of the amount that the total pool inventory exceeds the reserve stock level. Accordingly, the adjustment allowed to move loan stocks toward the reserve supply level is a decrease of 161.4 million pounds (one-half of 322.9 million pounds).

The total of the three marketing quota components for the 2000 marketing year is 240.2 million pounds. In addition, USDA used its discretionary authority to increase the three-component total by 3 percent (7.2 million pounds) because the Secretary determined that the 48.6 percent decrease called for by the quota formula would be too much of a hardship for small producers to handle at one time. Accordingly, the national marketing quota for the marketing year beginning October 1, 2000, for burley tobacco is 247.4 million pounds.

In accordance with section 319(c)(2) of the 1938 Act, the Secretary is authorized to establish a national reserve from the national quota, in an amount equivalent to not more than 1 percent of the national quota, for the purpose of making corrections in farm quotas to adjust for inequities and establish quotas for new farms. The Secretary has determined that a national reserve for the 2000 crop of burley tobacco of 579,000 pounds is adequate for these purposes.

### Price Support

Price support is required to be made available for each crop of a kind of tobacco for which quotas are in effect, or for which marketing quotas have not been disapproved by producers, at a level determined in accordance with a formula prescribed in section 106 of the 1949 Act.

With respect to the 2000 crop of burley tobacco, the level of support is determined in accordance with sections 106 (d) and (f) of the 1949 Act. Section 106(f)(7)(A) of the 1949 Act provides that the level of support for the 2000 crop of burley tobacco shall be:

(1) The level, in cents per pound, at which the 1999 crop of burley tobacco was supported, plus or minus, respectively,

(a) An adjustment of not less than 65 percent nor more than 100 percent of the total, as determined by the Secretary after taking into consideration the supply of the kind of tobacco involved in relation to demand, of:

(i) 66.7 percent of the amount by which:

(I) The average price received by producers for burley tobacco on the United States auction markets, as

determined by the Secretary, during the 5 marketing years immediately preceding the marketing year for which the determination is being made, excluding the year in which the average price was the highest and the year in which the average price was the lowest in such period, is greater or less than:

(II) The average price received by producers for burley tobacco on the United States auction markets, as determined by the Secretary, during the 5 marketing years immediately preceding the marketing year prior to the marketing year for which the determination is being made, excluding the year in which the average price was the highest and the year in which the average price was the lowest in such period; and

(ii) 33.3 percent of the change, expressed as a cost per pound of tobacco, in the index of prices paid by the tobacco producers from January 1 to December 31 of the calendar year immediately preceding the year in which the determination is made.

The difference between the two 5-year averages (i.e., the difference between (i)(I) and (II)) is 1.5 cents per pound. The difference in the cost index from January 1, 1999 to December 31, 1999, is 1.8 cents per pound. Applying these components to the price support formula (1.5 cents per pound, two-thirds weight; 1.8 cents per pound, one-third weight) results in a weighted total of 1.6 cents per pound. As indicated, section 106(f)(7)(a) of the 1949 Act provides that the Secretary may, on the basis of supply and demand conditions, limit the change in the price support level to no less than 65 percent of that amount. However, because the increase in price support is less than the cost of production, the increase was not limited. Accordingly, the 2000 crop of burley tobacco will be supported at 180.5 cents per pound, 1.6 cents higher than in 1999.

**List of Subjects**

*7 CFR Part 723*

Acreage allotments, Cigarettes, Marketing quotas, Penalties, Reporting and recordkeeping requirements.

*7 CFR Part 1464*

Loan programs—tobacco, Price support programs—tobacco, Reporting and recordkeeping requirements.

Accordingly, 7 CFR parts 723 and 1464 are amended as follows:

## PART 723—TOBACCO

1. The authority citation for 7 CFR part 723 continues to read as follows:

**Authority:** 7 U.S.C. 1301, 1311–1314, 1314–1, 1314b, 1314b–1, 1314b–2, 1314c, 1314d, 1314e, 1314f, 1314i, 1315, 1316, 1362, 1363, 1372–75, 1421, 1445–1, and 1445–2.

2. Section 723.112 is amended by:

(a) Adding and reserving paragraph (g).

(b) Adding paragraph (h) to read as follows:

**§ 723.112 Burley (type 31) tobacco.**

* * * * *

(g) [Reserved]

(h) The 2000-crop national marketing quota is 247.4 million pounds.

## PART 1464—TOBACCO

3. The authority citation for 7 CFR part 1464 continues to read as follows:

**Authority:** 7 U.S.C. 1421, 1423, 1441, 1445, 1445–1 and 1445–2; 15 U.S.C. 714b and 714c.

4. Section 1464.19 is amended by:

(a) Adding and reserving paragraph (g).

(b) Adding paragraph (h) to read as follows:

**§ 1464.19 Burley (type 31) tobacco.**

* * * * *

(g) [Reserved]

(h) The 2000 crop national price support level is 180.5 cents per pound.

Signed at Washington, D.C., on December 8, 2000.

**Keith Kelly,**

*Administrator, Farm Service Agency and Executive Vice President, Commodity Credit Corporation.*

[FR Doc. 00–31957 Filed 12–14–00; 8:45 am]

BILLING CODE 3410–05–P

## FEDERAL TRADE COMMISSION

## 16 CFR Part 0

## Rules of Practice

**AGENCY:** Federal Trade Commission (FTC).

**ACTION:** Final rule amendments.

**SUMMARY:** The Commission is updating and making other technical corrections and changes to the agency's description of its organization and activities in Part 0 of its Rules of Practice.

**EFFECTIVE DATE:** December 15, 2000.

**FOR FURTHER INFORMATION CONTACT:** Alex Tang, Attorney, Office of General Counsel, FTC, 600 Pennsylvania Avenue, NW, Washington, DC 20580, (202) 326–2447, atang@ftc.gov.

**SUPPLEMENTARY INFORMATION:** The Commission is amending Part 0 of its Rules of Practice, 16 CFR Part 0, to update and make other technical clarifications, corrections, and changes to the description of the agency's organization and activities.

*Rule 0.2, 16 CFR 0.2 (official address):* The Commission is amending this rule to include the address of the Commission's Web site, www.ftc.gov.

*Rule 0.4, 16 CFR 0.4 (laws administered):* The Commission is adding more recent statutes to the list of laws that the FTC enforces or administers and correcting certain other omissions and citations.

*Rule 0.7, 16 CFR 0.7 (delegation of functions):* The Commission is revising this rule to note the Commission's discretionary authority to review delegated matters upon its own initiative or upon petition, as provided in section 1(b) of Reorganization Plan No. 4 of 1961. Relevant procedures and standards for matters subject to Commission review are already set forth elsewhere in the Commission's Rules of Practice. *See, e.g.,* 16 CFR 4.2, 4.3.

*Rule 0.9, 16 CFR 0.9 (organizational structure):* The Commission is making a conforming amendment to include the Office of Inspector General. *See also infra* discussion of Rule 0.13.

*Rule 0.10, 16 CFR 0.10 (Office of the Executive Director):* The Commission is amending this description to reflect changes in the organization and responsibilities of the Executive Director's office.

*Rule 0.11, 16 CFR 0.11 (Office of the General Counsel):* The Commission is amending this description to revise and update the description of the Office's functions and activities, which include ethics, as well as FOIA and Privacy Act functions now consolidated in this office. *See* 63 FR 45643 (Aug. 26, 1998).

*Rule 0.12, 16 CFR 0.12 (Office of the Secretary):* The Commission is revising this description to note the Secretary's role in the legal publication of the agency's **Federal Register** notices and the reporting of its official decisions, which was previously included in the description for the Office of Executive Director.

*Rule 0.13, 16 CFR 0.13 (Office of the Inspector General):* The Commission is adding a description of the Office of Inspector General, which was previously omitted.

*Rule 0.14, 16 CFR 0.14 (Office of the Administrative Law Judges):* The Commission is amending this description to clarify that the functions performed by Administrative Law Judges are not limited to fact-finding but also include initial rulings on conclusions of law.

*Rule 0.16, 16 CFR 0.16 (Bureau of Competition):* The Commission is revising this description to note the

Bureau's educational, advisory, and international assistance activities.

*Rule 0.17, 16 CFR 0.17 (Bureau of Consumer Protection):* The Commission is revising this description to reflect the previous transfer of the agency's public ''reading room'' operations to this Bureau, complementing the Bureau's other consumer and business education activities, and to include section 13(b) of the FTC Act among the remedial authorities cited in the description.

*Rule 0.19, 16 CFR 0.19 (regional offices):* The Commission is amending paragraph (a) to revise and update the description of the Regional Offices' responsibilities.

The Administrative Procedure Act does not require prior public notice and comment on these amendments because they relate solely to rules of agency, organization, procedure or practice. 5 U.S.C. 553(b)(A). For this reason, the Regulatory Flexibility Act also does not require an initial or final regulatory flexibility analysis. *See* 5 U.S.C. 603, 604.

**List of Subjects in 16 CFR Part 0**

Organization and functions (Government agencies).

For the reasons set forth in the preamble, the Federal Trade Commission amends Title 16, chapter I, subchapter A, of the Code of Federal Regulations, as follows:

## SUBCHAPTER A—ORGANIZATION, PROCEDURES AND RULES OF PRACTICE

## PART 0—ORGANIZATION

1. Revise the authority for part 0 to read as follows:

**Authority:** 5 U.S.C. 552(a)(1); 15 U.S.C. 46(g).

2. Amend § 0.2 by adding the following sentence to the end of the section:

### § 0.2 Official address.

* * * The Commission's Web site address is www.ftc.gov.

3. Revise § 0.4 to read as follows:

### § 0.4 Laws administered.

The Commission exercises enforcement and administrative authority under the Federal Trade Commission Act (15 U.S.C. 41–58), Clayton Act (15 U.S.C. 12–27), Robinson-Patman Act (15 U.S.C. 13–13b, 21a), Webb-Pomerene (Export Trade) Act (15 U.S.C. 61–66), Packers and Stockyards Act (7 U.S.C. 181–229), Wool Products Labeling Act of 1939 (15 U.S.C. 68–68j), Lanham Trade-Mark Act (15 U.S.C. 1064), Fur Products Labeling Act (15 U.S.C. 69–69j), Textile Fiber Products Identification Act (15 U.S.C. 70–70k), Federal Cigarette Labeling and Advertising Act (15 U.S.C. 1331–1340), Fair Packaging and Labeling Act (15 U.S.C. 1451–1461), Truth in Lending Act (15 U.S.C. 1601–1667f), Fair Credit Reporting Act (15 U.S.C. 1681–1681u), Fair Credit Billing Act (15 U.S.C. 1666–1666j), Equal Credit Opportunity Act (15 U.S.C. 1691–1691f), Fair Debt Collection Practices Act (15 U.S.C. 1692–1692o), Electronic Fund Transfer Act (15 U.S.C. 1693–1693r), Hobby Protection Act (15 U.S.C. 2101–2106), Magnuson-Moss Warranty—Federal Trade Commission Improvement Act (15 U.S.C. 2301–2312, 45–58), Energy Policy and Conservation Act (42 U.S.C. 6201–6422, 15 U.S.C. 2008), Hart-Scott-Rodino Antitrust Improvements Act of 1976 (15 U.S.C. 18a), Petroleum Marketing Practices Act (15 U.S.C. 2801–2841), Comprehensive Smokeless Tobacco Health Education Act of 1986 (15 U.S.C. 4401–4408), Telephone Disclosure and Dispute Resolution Act of 1992 (15 U.S.C. 5701–5724), Telemarketing and Consumer Fraud and Abuse Prevention Act (15 U.S.C. 6101–6108), International Antitrust Enforcement Assistance Act of 1994 (15 U.S.C. 46, 57b–1, 1311–1312, 6201 & note, 6202–6212), Credit Repair Organizations Act (15 U.S.C. 1679–1679j), Children's Online Privacy Protection Act (15 U.S.C. 6501–6506), Identity Theft Assumption and Deterrence Act of 1998 (18 U.S.C. 1028 note), Gramm-Leach-Bliley Act (15 U.S.C. 6801–6809), and other Federal statutes.

4. Revise § 0.7 to read as follows:

### § 0.7 Delegation of functions.

The Commission, under the authority provided by Reorganization Plan No. 4 of 1961, may delegate, by published order or rule, certain of its functions to a division of the Commission, an individual Commissioner, an administrative law judge, or an employee or employee board, and retains a discretionary right to review such delegated action upon its own initiative or upon petition of a party to or an intervenor in such action.

5. Revise § 0.9 to read as follows:

### § 0.9 Organization structure.

The Federal Trade Commission comprises the following principal units: Office of the Executive Director; Office of the General Counsel; Office of the Secretary; Office of the Inspector General; Office of Administrative Law Judges; Bureau of Competition; Bureau of Consumer Protection; Bureau of Economics; and the Regional Offices.

6. Revise § 0.10 to read as follows:

### § 0.10 Office of the Executive Director.

The Executive Director, under the direction of the Chairman, is the chief operating official who develops and implements management and administrative policies, programs and directives for the Commission. The Executive Director works closely with the Bureaus on strategic planning and assessing the management and resource implications of any proposed action. In addition, the Executive Director manages the Commission's facilities and administrative services, financial management, information technology, and human resources.

7. Revise § 0.11 to read as follows:

### § 0.11 Office of the General Counsel.

The General Counsel is the Commission's chief law officer and adviser, who renders necessary legal services to the Commission, represents the Commission in the Federal and State courts, advises the Commission and other agency officials and staff with respect to questions of law and policy, including advice with respect to legislative matters and ethics, and responds to requests and appeals filed under the Freedom of Information and Privacy Acts and to intra- and intergovernmental access requests.

8. Revise § 0.12 to read as follows:

### § 0.12 Office of the Secretary.

The Secretary is responsible for the minutes of Commission meetings and is the legal custodian of the Commission's seal, property, papers, and records, including legal and public records. The Secretary, or in the Secretary's absence an Acting Secretary designated by the Commission, signs Commission orders and official correspondence. In addition, the Secretary is responsible for the publication of all Commission actions that appear in the **Federal Register** and for the publication of *Federal Trade Commission Decisions.*

9. Add § 0.13 to read as follows:

### § 0.13 Office of the Inspector General.

The Office of Inspector General (OIG) was established within the Federal Trade Commission in 1989 as required by the Inspector General Act Amendments of 1988 (5 U.S.C. app. 3). The OIG promotes the economy, efficiency and effectiveness of FTC programs and operations. To this end, the OIG independently conducts audits and investigations to find and prevent fraud, waste, and abuse within the agency.

10. Amend § 0.14 by revising the first sentence to read as follows:

**§ 0.14 Office of the Administrative Law Judges.**

Administrative law judges are officials to whom the Commission, in accordance with law, delegates the initial performance of statutory fact-finding functions and initial rulings on conclusions of law, to be exercised in conformity with Commission decisions and policy directives and with its Rules of Practice.

* * * * *

11. Revise § 0.16 to read as follows:

**§ 0.16 Bureau of Competition.**

The Bureau is responsible for enforcing Federal antitrust and trade regulation laws under section 5 of the Federal Trade Commission Act, the Clayton Act, and a number of other special statutes that the Commission is charged with enforcing. The Bureau's work aims to preserve the free market system and assure the unfettered operation of the forces of supply and demand. Its activities seek to ensure price competition, quality products and services and efficient operation of the national economy. The Bureau carries out its responsibilities by investigating alleged law violations, and recommending to the Commission such further action as may be appropriate. Such action may include injunctive and other equitable relief in Federal district court, complaint and litigation before the agency's administrative law judges, formal nonadjudicative settlement of complaints, trade regulation rules, or reports. The Bureau also conducts compliance investigations and initiates proceedings for civil penalties to assure compliance with final Commission orders dealing with competition and trade restraint matters. The Bureau's activities also include business and consumer education and staff advice on competition laws and compliance, and liaison functions with respect to foreign antitrust and competition law enforcement agencies and organizations, including requests for international enforcement assistance.

12. Revise § 0.17 to read as follows:

**§ 0.17 Bureau of Consumer Protection.**

The Bureau investigates unfair or deceptive acts or practices under section 5 of the Federal Trade Commission Act as well as potential violations of numerous special statutes which the Commission is charged with enforcing. It prosecutes before the agency's administrative law judges alleged violations of law after issuance of a complaint by the Commission or obtains through negotiation consented-to orders, which must be accepted and issued by the Commission. In consultation with the General Counsel, the Bureau may also seek injunctive or other equitable relief under section 13(b) of the Federal Trade Commission Act. The Bureau participates in trade regulation rulemaking proceedings under section 18(a)(1)(B) of the Federal Trade Commission Act and other rulemaking proceedings under statutory authority. It investigates compliance with final orders and trade regulation rules and seeks civil penalties or consumer redress for their violation, as well as injunctive and other equitable relief under section 13(b) of the Act. In addition, the Bureau seeks to educate both consumers and the business community about the laws it enforces, and to assist and cooperate with other state, local, foreign, and international agencies and organizations in consumer protection enforcement and regulatory matters. The Bureau also maintains the agency's public reference facilities, where the public may inspect and copy a current index of opinions, orders, statements of policy and interpretations, staff manuals and instructions that affect any member of the public, and other public records of the Commission.

13. Amend § 0.19 by revising paragraph (a) to read as follows:

**§ 0.19 The Regional Offices.**

(a) These offices are investigatory arms of the Commission, and have responsibility for investigational, trial, compliance, and consumer educational activities as delegated by the Commission. They are under the general supervision of the Office of the Executive Director, and clear their activities through the appropriate operating Bureaus.

* * * * *

By direction of the Commission.

**Donald S. Clark,**

*Secretary.*

[FR Doc. 00–31775 Filed 12–14–00; 8:45 am]

BILLING CODE 6750–01–P

---

## DEPARTMENT OF THE TREASURY

## Internal Revenue Service

## 26 CFR Part 301

**[TD 8911]**

**RIN 1545–AV92**

## Relief for Service in Combat Zone and for Presidentially Declared Disaster

**AGENCY:** Internal Revenue Service (IRS), Treasury.

**ACTION:** Final regulations.

**SUMMARY:** This document contains final regulations relating to the postponement of certain tax-related deadlines due either to service in a combat zone or a Presidentially declared disaster. The regulations reflect changes to the law made by the Taxpayer Relief Act of 1997. The regulations affect taxpayers serving in a combat zone and taxpayers affected by a Presidentially declared disaster.

**DATES:** *Effective Date:* These regulations are effective December 30, 1999.

*Applicability Dates:* For dates of applicability, see §§ 301.7508–1(b) and 301.7508A–1(h).

**FOR FURTHER INFORMATION CONTACT:** Bridget E. Finkenaur, (202) 622–4940 (not a toll-free number).

**SUPPLEMENTARY INFORMATION:**

### Background

This document contains amendments to the Regulations on Procedure and Administration (26 CFR part 301) under section 7508 of the Internal Revenue Code (Code), relating to postponement of certain acts by reason of service in a combat zone, and section 7508A, relating to postponement of certain tax-related deadlines by reason of a Presidentially declared disaster. Section 7508A was added to the Code by section 911 of the Taxpayer Relief Act of 1997, Public Law 105–34 (111 Stat. 788), effective for any period for performing an act that has not expired before August 5, 1997.

A notice of proposed rulemaking (REG–101492–98) was published in the **Federal Register** (64 FR 73444) on December 30, 1999. No public hearing was requested or held. One comment letter was received. After consideration of the comments, the proposed regulations are adopted as modified by this Treasury decision. The comments are discussed below.

### Summary of Comments

*1. IRA and Pension Contribution Deadlines*

Section 301.7508A–1(c)(1) of the proposed regulations lists various tax-related deadlines that may be postponed. The commentator recommends that deadlines for contributions to an individual retirement account (IRA) or a pension plan be added to the list. The final regulations adopt this recommendation and also add the deadline for rollover contributions.

*2. Notification of IRS When Taxpayer Moves Out of Disaster Area*

The commentator suggests that the IRS develop a simple procedure for

taxpayers to notify the IRS when they move out of a Presidentially declared disaster area. The commentator believes that the notification would ensure that relief under section 7508A will automatically apply to a taxpayer who has moved out of a Presidentially declared disaster area. Such taxpayers could also be advised of any further relevant filing guidance regarding the disaster.

The final regulations do not adopt this suggestion because it is not necessary for taxpayers moving out of a disaster area to notify the IRS to obtain relief under section 7508A. When a Presidentially declared disaster occurs, the IRS makes a decision whether to grant relief to taxpayers affected by the disaster. If a decision is made to grant relief, the IRS identifies most affected taxpayers located in the disaster area and places a marker on the affected tax accounts. A subsequent change of address will not remove the marker from the tax account. Thus, an affected taxpayer who relocates outside a disaster area will still automatically receive disaster relief.

Because the IRS may not be able to identify all taxpayers potentially affected by a Presidentially declared disaster, some taxpayers may have to identify themselves to the IRS to receive relief. To ensure that they receive the relief for which they are eligible, the IRS typically issues public guidance, such as a news release, that describes how to claim relief. The guidance instructs taxpayers how to note on their tax return that they are affected taxpayers, and what, if any, additional information should be attached. When the IRS processes these tax returns, it manually places the disaster relief marker on the tax account. Subsequent changes of address will not affect the grant of relief.

*3. Definition of Affected Taxpayer*

The regulations list seven types of affected taxpayers, including ''any business whose principal place of business is located in a covered disaster area.'' The commentator recommends that this definition be expanded to include all owners of a business.

The final regulations do not adopt this recommendation. The IRS and Treasury Department believe that the definition of *affected taxpayer* in the proposed regulations is sufficiently broad to cover all taxpayers within the intended scope of section 7508A. Although the final regulations do not provide a specific rule for business owners (other than sole proprietors), the IRS may nonetheless make a determination based on the facts and circumstances in a particular case that a business owner is an affected taxpayer under either § 301.7508A–1(d)(1)(iv), which applies to an individual whose principal residence is not located in a disaster area, but whose records necessary to meet the deadline for a specified act are maintained in a covered disaster area, or under § 301.7508A–1(d)(1)(vii), which applies to any other person determined by the IRS to be affected by a Presidentially declared disaster. For example, in the case of a partnership, it is expected that partners whose ability to meet a deadline is significantly affected by a Presidentially declared disaster will be granted relief.

*4. Deadline for Tax Deposits*

The commentator also recommends that the deadline for tax deposits under section 6302 be added to the list. The commentator states that no distinction should be drawn between tax payments and tax deposits and that allowing a postponement of deposits would be less cumbersome than waiving the section 6656 deposit penalties for reasonable cause. To the contrary, due to the frequency with which tax deposits are due, the IRS believes it would be more administratively cumbersome to defer those deadlines. However, in cases where taxpayers are unable to make timely tax deposits under section 6302 because of a Presidentially declared disaster, the IRS will consider a reasonable cause waiver of the section 6656 failure to deposit penalty on a case by case basis. The IRS believes such a system is more administrable. Thus, this comment has not been adopted by the final regulations.

**Explanation of Other Revisions**

Section 301.7508A–1(c)(1) of the final regulations expands the acts for which disaster relief is available to include: the filing of generation-skipping transfer tax returns; the payment of generation-skipping transfer tax; and the filing of any petition with the Tax Court.

Sections 301.7508A–1(d)(1)(ii) and (iv) of the final regulations have been revised to clarify that *affected taxpayer* includes any business entity or sole proprietor whose principal place of business is located in a covered disaster area.

*Example 5* of the final regulations clarifies the application of section 7508A to the lookback period in section 6511(b)(2)(A). This period limits the amount that may be refunded to the taxpayer when a timely claim is filed under section 6511(a). In *Example 5*, H and W timely file their 2001 income tax return on April 15, 2002. *Example 5* states that an amended return for 2001 will be timely if it is filed on or before July 14, 2005. As clarified by the final regulations, *Example 5* further states that the section 6511(b)(2)(A) lookback period runs from July 14, 2005, back to April 15, 2002. Thus, the taxpayers are allowed a refund of estimated tax and tax withheld from wages for 2001, deemed paid on April 15, 2002, under section 6513(b).

The final regulations also clarify *Examples 6* and *7*. Under § 301.7508A–1(f) of the final regulations, if there is an extension of time to file income tax returns under section 6081 and to pay income tax with respect to such returns under section 6161, and a postponement of tax-related deadlines under section 7508A, interest on an underpayment that arises during such period is abated under section 6404(h) for the period of time disregarded under section 7508A. This is illustrated by *Example 8*. By contrast, in *Examples 6* and *7*, extensions were not granted under sections 6081 and 6161 and interest was not abated under section 6404(h). Therefore, in *Examples 6* and *7*, no interest abatement would be permitted regardless of whether the underpayment arose before or during the extension period. Therefore, *Examples 6* and *7* are amended by removing the statement that interest is not abated ''because the underpayment arose prior to the extension period'' and clarifying that because no extensions under sections 6081 and 6161 were granted, interest was not abated under section 6404(h).

**Special Analyses**

It has been determined that these final regulations are not a significant regulatory action as defined in Executive Order 12866. Therefore, a regulatory assessment is not required. It also has been determined that section 553(b) of the Administrative Procedure Act (5 U.S.C. chapter 5) does not apply to these regulations, and because these regulations do not impose a collection of information on small entities, the Regulatory Flexibility Act (5 U.S.C. chapter 6) does not apply. Pursuant to section 7805(f) of the Code, the notice of proposed rulemaking preceding these final regulations was submitted to the Chief Counsel for Advocacy of the Small Business Administration for comment on their impact on small business.

**Drafting Information**

The principal author of these regulations is Bridget E. Finkenaur, Office of Associate Chief Counsel, Procedure and Administration (Administrative Provisions and Judicial Practice Division). However, other personnel from the IRS and Treasury

Department participated in their development.

**List of Subjects in 26 CFR Part 301**

Employment taxes, Estate taxes, Excise taxes, Gift taxes, Income taxes, Penalties, Reporting and recordkeeping requirements.

**Amendments to the Regulations**

Accordingly, 26 CFR part 301 is amended as follows:

## PART 301—PROCEDURE AND ADMINISTRATION

**Paragraph 1.** The authority citation for part 301 is amended by adding entries in numerical order to read in part as follows:

**Authority:** 26 U.S.C. 7805 * * *

Section 301.7508–1 also issued under 26 U.S.C. 7508(a)(1)(K);

Section 301.7508A–1 also issued under 26 U.S.C. 7508(a)(1)(K) and 7508A(a); * * *

**Par. 2.** Section 301.7508–1 is added to read as follows:

### § 301.7508–1 Time for performing certain acts postponed by reason of service in a combat zone.

(a) *General rule.* The period of time that may be disregarded for performing certain acts under section 7508 applies to acts described in section 7508(a)(1) and to other acts specified in a revenue ruling, revenue procedure, notice, or other guidance published in the Internal Revenue Bulletin (see § 601.601(d)(2) of this chapter).

(b) *Effective date.* This section applies to any period for performing an act that has not expired before December 30, 1999.

**Par. 3.** Section 301.7508A–1 is added to read as follows:

### § 301.7508A–1 Postponement of certain tax-related deadlines by reason of Presidentially declared disaster.

(a) *Scope.* This section provides rules by which the Internal Revenue Service (IRS) may postpone deadlines for performing certain acts with respect to taxes other than taxes not administered by the IRS such as firearms tax (chapter 32, section 4181); harbor maintenance tax (chapter 36, section 4461); and alcohol and tobacco taxes (subtitle E).

(b) *Postponed deadlines.* For any tax, penalty, additional amount, or addition to the tax of an affected taxpayer (as defined in paragraph (d)(1) of this section), the IRS may disregard a period of up to 90 days in determining, under the internal revenue laws—

(1) Whether any or all of the acts described in paragraph (c) of this section were performed within the time prescribed; and

(2) The amount of any credit or refund.

(c) *Acts for which a period may be disregarded*—(1) *Acts performed by taxpayers.* Paragraph (b) of this section applies to the following acts performed by affected taxpayers (as defined in paragraph (d)(1) of this section)—

(i) Filing any return of income tax, estate tax, gift tax, generation-skipping transfer tax, excise tax (other than firearms tax (chapter 32, section 4181); harbor maintenance tax (chapter 36, section 4461); and alcohol and tobacco taxes (subtitle E)), or employment tax (including income tax withheld at source and income tax imposed by subtitle C or any law superseded thereby);

(ii) Paying any income tax, estate tax, gift tax, generation-skipping transfer tax, excise tax (other than firearms tax (chapter 32, section 4181); harbor maintenance tax (chapter 36, section 4461); and alcohol and tobacco taxes (subtitle E)), employment tax (including income tax withheld at source and income tax imposed by subtitle C or any law superseded thereby), any installment of those taxes (including payment under section 6159 relating to installment agreements), or of any other liability to the United States in respect thereof, but not including deposits of taxes pursuant to section 6302 and the regulations under section 6302;

(iii) Making contributions to a qualified retirement plan (within the meaning of section 4974(c)) under section 219(f)(3), 404(a)(6), 404(h)(1)(B), or 404(m)(2); making distributions under section 408(d)(4); recharacterizing contributions under section 408A(d)(6); or making a rollover under section 402(c), 403(a)(4), 403(b)(8), or 408(d)(3);

(iv) Filing a petition with the Tax Court, or for review of a decision rendered by the Tax Court;

(v) Filing a claim for credit or refund of any tax;

(vi) Bringing suit upon a claim for credit or refund of any tax; and

(vii) Any other act specified in a revenue ruling, revenue procedure, notice, announcement, news release, or other guidance published in the Internal Revenue Bulletin (see § 601.601(d)(2) of this chapter).

(2) *Acts performed by the government.* Paragraph (b) of this section applies to the following acts performed by the government—

(i) Assessing any tax;

(ii) Giving or making any notice or demand for the payment of any tax, or with respect to any liability to the United States in respect of any tax;

(iii) Collecting by the Secretary, by levy or otherwise, of the amount of any liability in respect of any tax;

(iv) Bringing suit by the United States, or any officer on its behalf, in respect of any liability in respect of any tax;

(v) Allowing a credit or refund of any tax; and

(vi) Any other act specified in a revenue ruling, revenue procedure, notice, or other guidance published in the Internal Revenue Bulletin (see § 601.601(d)(2) of this chapter).

(d) *Definitions*—(1) *Affected taxpayer* means—

(i) Any individual whose principal residence (for purposes of section 1033(h)(4)) is located in a covered disaster area;

(ii) Any business entity or sole proprietor whose principal place of business is located in a covered disaster area;

(iii) Any individual who is a relief worker affiliated with a recognized government or philanthropic organization and who is assisting in a covered disaster area;

(iv) Any individual whose principal residence (for purposes of section 1033(h)(4)), or any business entity or sole proprietor whose principal place of business is not located in a covered disaster area, but whose records necessary to meet a deadline for an act specified in paragraph (c) of this section are maintained in a covered disaster area;

(v) Any estate or trust that has tax records necessary to meet a deadline for an act specified in paragraph (c) of this section and that are maintained in a covered disaster area;

(vi) The spouse of an affected taxpayer, solely with regard to a joint return of the husband and wife; or

(vii) Any other person determined by the IRS to be affected by a Presidentially declared disaster (within the meaning of section 1033(h)(3)).

(2) *Covered disaster area* means an area of a Presidentially declared disaster (within the meaning of section 1033(h)(3)) to which the IRS has determined paragraph (b) of this section applies.

(e) *Notice of postponement of certain acts.* If any tax-related deadline is postponed under section 7508A and this section, the IRS will publish a revenue ruling, revenue procedure, notice, announcement, news release, or other guidance published in the Internal Revenue Bulletin (see § 601.601(d)(2) of this chapter) describing the acts postponed, the number of days disregarded with respect to each act, the time period to which the postponement applies, and the location of the covered disaster area. Guidance under this

paragraph (e) will be published as soon as practicable after the declaration of a Presidentially declared disaster.

(f) *Abatement of interest under section 6404(h).* In the case of a Presidentially declared disaster, if there is an extension of time to file income tax returns under section 6081 and to pay income tax with respect to such returns under section 6161, and, in addition, a postponement of tax-related deadlines under section 7508A, interest on an underpayment of income tax that arises during such period will be abated under section 6404(h) for the period of time disregarded under section 7508A in addition to the period of time covered by the extension of time to file and the extension of time to pay.

(g) *Examples.* The rules of this section are illustrated by the following examples:

*Example 1.* (i) Corporation M, a calendar year taxpayer, has its principal place of business in County A in State X. Pursuant to a timely filed request for extension of time to file, Corporation M's 1999 Form 1120, ''U.S. Corporation Income Tax Return,'' is due on September 15, 2000. Also due on September 15, 2000, is Corporation M's third quarter estimated tax payment for 2000. Corporation M's 2000 third quarter Form 720, ''Quarterly Federal Excise Tax Return,'' and third quarter Form 941, ''Employer's Quarterly Federal Tax Return,'' are due on October 31, 2000. In addition, Corporation M has an employment tax deposit due on September 15, 2000.

(ii) On September 1, 2000, a hurricane strikes County A. On September 6, 2000, the President declares a disaster within the meaning of section 1033(h)(3). The Internal Revenue Service determines that County A in State X is a covered disaster area and publishes guidance informing taxpayers that for acts described in paragraph (c) of this section that are required to be performed within the period beginning on September 1, 2000, and ending on November 6, 2000, 90 days will be disregarded in determining whether the acts are performed timely.

(iii) Because Corporation M's principal place of business is in County A, Corporation M is an affected taxpayer. Accordingly, Corporation M's 1999 Form 1120 will be filed timely if filed on or before December 14, 2000. Corporation M's 2000 third quarter estimated tax payment will be made timely if paid on or before December 14, 2000. In addition, because excise and employment tax returns are described in paragraph (c) of this section, Corporation M's 2000 third quarter Form 720 and third quarter Form 941 will be filed timely if filed on or before January 29, 2001. However, because deposits of taxes are excluded from the scope of paragraph (c) of this section, Corporation M's employment tax deposit is due on September 15, 2000. In addition, Corporation M's deposits relating to the third quarter Form 720 are due without extension.

*Example 2.* The facts are the same as in *Example 1,* except that during 2000, Corporation M's 1996 Form 1120 is being examined by the IRS. Pursuant to a timely filed request for extension of time to file, Corporation M timely filed its 1996 Form 1120 on September 15, 1997. Without application of this section, the statute of limitations on assessment for 1996 income tax will expire on September 15, 2000. However, pursuant to paragraph (c) of this section, assessment of tax is one of the government acts for which up to 90 days may be disregarded. The IRS determines that an extension of the statute of limitations is necessary and appropriate under these circumstances. Because the September 15, 2000, expiration date of the statute of limitations on assessment falls within the period of the disaster as described in the IRS's published guidance, the 90 day period disregarded under paragraph (b) of this section begins on September 16, 2000, and ends on December 14, 2000. Accordingly, the statute of limitations on assessment for Corporation M's 1996 income tax will expire on December 14, 2000.

*Example 3.* The facts are the same as in *Example 2,* except that the examination of the 1996 taxable year was completed earlier in 2000, and on July 28, 2000, the IRS mailed a statutory notice of deficiency to Corporation M. Without application of this section, Corporation M has 90 days (or until October 26, 2000) to file a petition with the Tax Court. However, pursuant to paragraph (c) of this section, filing a petition with the Tax Court is one of the taxpayer acts for which up to 90 days may be disregarded. Because Corporation M is an affected taxpayer, Corporation M's petition to the Tax Court will be filed timely if filed on or before January 24, 2001.

*Example 4.* (i) H and W, individual calendar year taxpayers, intend to file a joint Form 1040, ''U.S. Individual Income Tax Return,'' for the 2001 taxable year and are required to file a Schedule H, ''Household Employment Taxes.'' The joint return is due on April 15, 2002. H and W fully and timely paid all taxes for the 2001 taxable year, including domestic service employment taxes, through withholding and estimated tax payments. H and W's principal residence is in County B in State Y.

(ii) On April 2, 2002, a severe ice storm strikes County B. On April 5, 2002, the President declares a disaster within the meaning of section 1033(h)(3). The IRS determines that County B in State Y is a covered disaster area and publishes guidance informing taxpayers that for acts described in paragraph (c) of this section that are required to be performed within the period beginning on April 2, 2002, and ending on April 19, 2002, 90 days will be disregarded in determining whether the acts are performed timely.

(iii) Because H and W's principal residence is in County B, H and W are affected taxpayers. Because April 15, 2002, the due date of H and W's 2001 Form 1040 and Schedule H, falls within the period of the disaster as described in the IRS published guidance, the 90 day period disregarded under paragraph (b) of this section begins on April 16, 2002, and ends on July 14, 2002, a Sunday. Pursuant to section 7503, if the last day for performing an act falls on Saturday, Sunday, or a legal holiday, the performance of the act shall be considered timely if it is performed on the next succeeding day that is not a Saturday, Sunday, or legal holiday. Accordingly, H and W's 2001 Form 1040 and Schedule H will be filed timely if filed on or before July 15, 2002.

*Example 5.* (i) H and W, residents of County C in State Z, want to file an amended return to request a refund of 2001 taxes. H and W timely filed their 2001 income tax return on April 15, 2002. Without application of section 7508A, under section 6511(a), H and W's amended 2001 tax return must be filed on or before April 15, 2005.

(ii) On April 1, 2005, an earthquake strikes County C. On April 5, 2005, the President declares a disaster within the meaning of section 1033(h)(3). The Internal Revenue Service determines that County C in State Z is a covered disaster area and publishes guidance informing taxpayers that for acts described in paragraph (c) of this section that are required to be performed within the period beginning on April 1, 2005, and ending on April 19, 2005, 90 days will be disregarded in determining whether the acts are performed timely.

(iii) Under paragraph (c) of this section, filing a claim for refund of tax is one of the taxpayer acts for which up to 90 days may be disregarded. Ninety days are disregarded under paragraph (b)(1) of this section beginning on April 16, 2005, and ending on July 14, 2005. Accordingly, H's and W's claim for refund for 2001 taxes will be timely if filed on or before July 14, 2005. Moreover, in applying the lookback period in section 6511(b)(2)(A), which limits the amount of the allowable refund, the period from July 14, 2005, back to April 16, 2005, is disregarded under paragraph (b)(2) of this section. Thus, if the claim is filed on or before July 14, 2005, amounts deemed paid on April 15, 2002, under section 6513(b), such as estimated tax and tax withheld from wages, will have been paid within the lookback period of section 6511(b)(2)(A).

*Example 6.* (i) L is an unmarried, calendar year taxpayer whose principal residence is located in County R in State T. L does not timely file a 2001 Form 1040, ''U.S. Individual Income Tax Return,'' which is due on April 15, 2002, and does not timely pay tax owed on that return. Absent reasonable cause, L is subject to the failure to file and failure to pay penalties under section 6651 beginning on April 16, 2002.

(ii) On May 10, 2002, a tornado strikes County R. On May 14, 2002, the President declares a disaster within the meaning of section 1033(h)(3). The Internal Revenue Service determines that County R in State T is a covered disaster area and publishes guidance informing taxpayers that for acts described in paragraph (c) of this section that are required to be performed within the period beginning on May 10, 2002, and ending on June 27, 2002, 90 days will be disregarded in determining whether the acts are timely.

(iii) On May 31, 2002, L files a 2001 Form 1040, ''U.S. Individual Income Tax Return,'' and pays the tax owed for 2001.

(iv) Because L's principal residence is in County R, L is an affected taxpayer. For

purposes of penalties under section 6651, 90 days are disregarded under paragraph (b) of this section beginning on May 10, 2002. Because L files the return on May 31, 2002, the penalties under section 6651 will run from April 16, 2002, until May 10, 2002. Because there is no extension of time to file returns under section 6081 and no extension of time to pay under section 6161, interest is not abated under section 6404(h), and L is liable for the underpayment interest for the entire period of April 16, 2002, through May 31, 2002.

*Example 7.* The facts are the same as in *Example 6,* except L does not file the 2001 Form 1040 until November 25, 2002. Ninety days are disregarded under paragraph (b) of this section beginning on May 10, 2002, and ending on August 8, 2002. Therefore, the section 6651 penalties will run from April 16, 2002, until May 10, 2002, and from August 9, 2002, until November 25, 2002. Because there is no extension of time to file returns under section 6081 and no extension of time to pay under section 6161, interest is not abated under section 6404(h), and L will remain liable for underpayment interest for the entire period of April 16, 2002, through November 25, 2002.

*Example 8.* (i) H and W, individual calendar year taxpayers, intend to file a joint Form 1040, ''U.S. Individual Income Tax Return,'' for the 2001 taxable year. The joint return is due on April 15, 2002. After credits for withholding under section 31 and estimated tax payments, H and W owe tax for the 2001 taxable year. H and W's principal residence is in County D in State Q.

(ii) On March 1, 2002, severe flooding strikes County D. On March 5, 2002, the President declares a disaster within the meaning of section 1033(h)(3). The Internal Revenue Service determines that County D in State Q is a covered disaster area and publishes guidance informing taxpayers that for acts described in paragraph (c) of this section that are required to be performed within the period beginning on March 1, 2002, and ending on April 25, 2002, 90 days will be disregarded in determining whether the acts are performed timely. The guidance also grants affected taxpayers an additional 6-month extension of time to file returns under section 6081 and an additional 6-month extension of time to pay under section 6161.

(iii) Because H and W's principal residence is in County D, H and W are affected taxpayers. Pursuant to the published guidance, H and W have until January 13, 2003, to file their return and pay the tax. This date is computed as follows: Under sections 6081 and 6161, H and W will have an additional 6 months, until October 15, 2002, to file and pay the tax. Further, under paragraph (f) of this section, 90 days are disregarded in determining the period of the extension. Therefore, H and W's return and payment of tax will be timely if filed and paid on or before January 13, 2003. In addition, under section 6404(h), underpayment interest under section 6601 is abated for the entire period, from April 16, 2002, until January 13, 2003.

(h) *Effective date.* This section applies to disasters declared after December 30, 1999.

**Robert E. Wenzel,**

*Deputy Commissioner of Internal Revenue.*

Approved: November 30, 2000.

**Jonathan Talisman,**

*Acting Assistant Secretary of the Treasury.*

[FR Doc. 00–31500 Filed 12–14–00; 8:45 am]

BILLING CODE 4830–01–P

## DEPARTMENT OF JUSTICE

## 28 CFR Part 0

**[AG Order No. 2343–2000]**

## Authority To Compromise and Close Civil Claims

**AGENCY:** Department of Justice, Civil Division.

**ACTION:** Final rule.

**SUMMARY:** This rule restores to the Code of Federal Regulations language regarding the definition of ''gross amount of the original claim'' that appears to have been omitted through clerical error when the regulation was previously amended. This amendment added language relating to the settlement of certain customs penalty cases but inadvertently replaced, rather than supplemented, the then existing language.

**EFFECTIVE DATE:** December 15, 2000.

**FOR FURTHER INFORMATION CONTACT:** Stephen Altman, Assistant Director, Commercial Litigation Branch, Civil Division, Department of Justice, Room 6540, 601 D Street, NW., Washington, DC 20004; (202) 307–0188.

**SUPPLEMENTARY INFORMATION:**

### Why Is the Department Publishing This Rule?

This rule corrects the regulations governing authority to compromise civil claims. This amendment restores the exact language of 28 CFR 0.169 that was deleted when a prior amendment published on September 8, 1986, inadvertently substituted rather than added language defining that term as applied to the settlement of certain customs penalty cases. 51 FR 31939.

### To What Situations Does the Regulation Being Amended Apply?

The regulation at 28 CFR 0.169, which this rule amends, is included in subpart Y of Title 28 of the Code of Federal Regulations. Subpart Y deals with the authority of the Assistant Attorneys General of the various litigating divisions of the Department of Justice to compromise and close civil claims, and the responsibility for collecting and enforcing judgments, fines, penalties, and forfeitures. Throughout subpart Y, various levels of authority are defined by reference to the term ''gross amount of the original claim.'' This definition is important in setting the scope of authority in fraud cases where a demand may be made for multiples of single damages and forfeitures or civil penalties.

### How Does This Rule Affect Persons Outside the Department?

This rule has no effect on the rights or obligations of persons outside the Department. It only pertains to case settlement authorities delegated to certain Department personnel.

### Administrative Procedure Act 5 U.S.C. 553

Because this rule relates to agency organization and pertains to a matter of internal Department of Justice management and procedures, the rule does not need to be published for public comment, 5 U.S.C. 553(a)(2). The rule is effective upon issuance.

### Regulatory Flexibility Act

The Attorney General, in accordance with the Regulatory Flexibility Act (5 U.S.C. 605(b)), has reviewed this regulation and by approving it certifies that this regulation will not have a significant economic impact on a substantial number of small entities because it pertains to administrative and organizational matters affecting the Department. Further, a Regulatory Flexibility Analysis was not required to be prepared for this final rule since the Department was not required to publish a general notice of proposed rulemaking for this matter.

### Executive Order 12866

This action has been drafted and reviewed in accordance with Executive Order 12866, ''Regulatory Planning and Review,'' section 1(b), Principles of Regulation. This rule is limited to agency organization, management, and personnel as described by section 3(d)(3) of Executive Order 12866 and, therefore, is not a ''regulation'' or ''rule'' as defined by this Executive Order. Accordingly, this action has not been reviewed by the Office of Management and Budget.

### Executive Order 13132

This regulation will not have substantial direct effects on the States, on the relationship between the national government and the States, or on distribution of power and

responsibilities among the various levels of government. Therefore, in accordance with Executive Order 13132, it is determined that this rule does not have sufficient federalism implications to warrant the preparation of a Federalism Summary Impact Statement.

**Executive Order 12988**

This regulation meets the applicable standards set forth in sections 3(a) and 3(b)(2) of Executive Order 12988, Civil Justice Reform.

**Small Business Regulatory Enforcement Fairness Act of 1996**

This rule is not a major rule as defined by section 251 of the Small Business Regulatory Enforcement Fairness Act of 1996. 5 U.S.C. 804. This rule will not result in an annual effect on the economy of $100,000,000 or more; a major increase in costs or prices; or significant adverse effects on competition, employment, investment, productivity, innovation, or the ability of United States-based companies to compete with foreign-based companies in domestic and export markets.

**Unfunded Mandates Reform Act of 1995**

This rule will not result in the expenditure by State, local, and tribal governments, in the aggregate, or by the private sector, of $100,000,000 or more in any one year, and it will not significantly or uniquely affect small governments. Therefore, no actions were deemed necessary under the provisions of the Unfunded Mandates Reform Act of 1995.

**Plain Language Instructions**

We try to write clearly. If you can suggest how to improve the clarity of these regulations, call or write: Stephen Altman, Assistant Director, Commercial Litigation Branch, Civil Division, Department of Justice, Room 6540, 601 D Street, NW., Washington, DC 20004; (202) 307–0188.

**Congressional Review Act**

This action pertains to agency management, personnel, and organization and does not substantially affect the rights or obligations of non-agency parties and, accordingly, is not a ''rule'' as that term is used by the Congressional Review Act (Subtitle E of the Small Business Regulatory Enforcement Fairness Act of 1996). Therefore, the reporting requirement of 5 U.S.C. 801 does not apply.

**List of Subjects in 28 CFR Part 0**

Authority delegations (government agencies), Government employees, Organization and functions (government agencies), Whistleblowing.

Accordingly, for the reasons set forth in the preamble, Chapter I of Title 28 of the Code of Federal Regulations is amended as follows:

## PART 0—[AMENDED]

1. The authority citation for part 0 continues to read as follows:

**Authority:** 5 U.S.C. 301; 28 U.S.C. 509, 510, 515–519.

2. Revise § 0.169 to read as follows:

**§ 0.169 Definition of ''gross amount of the original claim''.**

(a) The phrase *gross amount of the original claim* as used in this subpart Y and as applied to any civil fraud claim described in § 0.45(d), shall mean the amount of single damages involved.

(b) The phrase *gross amount of the original claim* as used in this subpart Y and as applied to any civil claim brought under section 592 of the Tariff Act of 1930, as amended (see § 0.45(c)), shall mean the actual amount of lost customs duties involved. In nonrevenue loss cases brought under section 592 of the Tariff Act of 1930, as amended, the phrase *gross amount of the original claim* shall mean the amount demanded in the Customs Service's mitigation decision issued pursuant to 19 U.S.C. 1618 or, if no mitigation decision has been issued, the *gross amount of the original claim* shall mean twenty percent of the dutiable value of the merchandise.

Dated: December 6, 2000.

**Janet Reno,**

*Attorney General.*

[FR Doc. 00–31765 Filed 12–14–00; 8:45 am]

BILLING CODE 4410–12–M

---

## PENSION BENEFIT GUARANTY CORPORATION

## 29 CFR Parts 4022 and 4044

## Benefits Payable in Terminated Single-Employer Plans; Allocation of Assets in Single-Employer Plans; Interest Assumptions for Valuing and Paying Benefits

**AGENCY:** Pension Benefit Guaranty Corporation.

**ACTION:** Final rule.

**SUMMARY:** The Pension Benefit Guaranty Corporation's regulations on Benefits Payable in Terminated Single-Employer Plans and Allocation of Assets in Single-Employer Plans prescribe interest assumptions for valuing and paying benefits under terminating single-employer plans. This final rule amends the regulations to adopt interest assumptions for plans with valuation dates in January 2001. Interest assumptions are also published on the PBGC's web site (http://www.pbgc.gov).

**EFFECTIVE DATE:** January 1, 2001.

**FOR FURTHER INFORMATION CONTACT:** Harold J. Ashner, Assistant General Counsel, Office of the General Counsel, Pension Benefit Guaranty Corporation, 1200 K Street, NW., Washington, DC 20005, 202–326–4024. (For TTY/TDD users, call the Federal relay service toll-free at 1–800–877–8339 and ask to be connected to 202–326–4024.)

**SUPPLEMENTARY INFORMATION:** The PBGC's regulations prescribe actuarial assumptions—including interest assumptions—for valuing and paying plan benefits of terminating single-employer plans covered by title IV of the Employee Retirement Income Security Act of 1974. The interest assumptions are intended to reflect current conditions in the financial and annuity markets.

Three sets of interest assumptions are prescribed: (1) a set for the valuation of benefits for allocation purposes under section 4044 (found in Appendix B to Part 4044), (2) a set for the PBGC to use to determine whether a benefit is payable as a lump sum and to determine lump-sum amounts to be paid by the PBGC (found in Appendix B to Part 4022), and (3) a set for private-sector pension practitioners to refer to if they wish to use lump-sum interest rates determined using the PBGC's historical methodology (found in Appendix C to Part 4022). (See the PBGC's two final rules published March 17, 2000, in the **Federal Register** (at 65 FR 14752 and 14753). Effective May 1, 2000, these rules changed how the interest assumptions are used and where they are set forth in the PBGC's regulations.)

Accordingly, this amendment (1) adds to Appendix B to Part 4044 the interest assumptions for valuing benefits for allocation purposes in plans with valuation dates during January 2001, (2) adds to Appendix B to Part 4022 the interest assumptions for the PBGC to use for its own lump-sum payments in plans with valuation dates during January 2001, and (3) adds to Appendix C to Part 4022 the interest assumptions for private-sector pension practitioners to refer to if they wish to use lump-sum interest rates determined using the PBGC's historical methodology for valuation dates during January 2001.

For valuation of benefits for allocation purposes, the interest assumptions that the PBGC will use (set forth in Appendix B to part 4044) will be 6.70

percent for the first 20 years following the valuation date and 6.25 percent thereafter. These interest assumptions (in comparison with those in effect for December 2000) reflect a 5-year decrease in the period during which the initial rate applies (from a period of 25 years following the valuation date to a period of 20 years following the valuation date). The initial rate, in effect during the 20-year period, represents a decrease (from the initial rate in effect for December 2000) of 0.30 percent. The ultimate rate, in effect thereafter, is unchanged.

The interest assumptions that the PBGC will use for its own lump-sum payments (set forth in Appendix B to part 4022) will be 5.00 percent for the period during which a benefit is in pay status, 4.25 percent during the seven-year period directly preceding the benefit's placement in pay status, and 4.00 percent during any other years preceding the benefit's placement in pay status. These interest assumptions represent a decrease (from those in effect for December 2000) of 0.25 percent for the period during which a benefit is in pay status and the seven-year period directly preceding the benefit's placement in pay status, and are otherwise unchanged.

For private-sector payments, the interest assumptions (set forth in Appendix C to part 4022) will be the same as those used by the PBGC for determining and paying lump sums (set forth in Appendix B to part 4022).

The PBGC has determined that notice and public comment on this amendment are impracticable and contrary to the public interest. This finding is based on the need to determine and issue new interest assumptions promptly so that the assumptions can reflect, as accurately as possible, current market conditions.

Because of the need to provide immediate guidance for the valuation and payment of benefits in plans with valuation dates during January 2001, the PBGC finds that good cause exists for making the assumptions set forth in this amendment effective less than 30 days after publication.

The PBGC has determined that this action is not a ''significant regulatory action'' under the criteria set forth in Executive Order 12866.

Because no general notice of proposed rulemaking is required for this amendment, the Regulatory Flexibility Act of 1980 does not apply. See 5 U.S.C. 601(2).

**List of Subjects**

*29 CFR Part 4022*

Employee benefit plans, Pension insurance, Pensions, Reporting and recordkeeping requirements.

*29 CFR Part 4044*

Employee benefit plans, Pension insurance, Pensions.

In consideration of the foregoing, 29 CFR parts 4022 and 4044 are amended as follows:

## PART 4022—BENEFITS PAYABLE IN TERMINATED SINGLE-EMPLOYER PLANS

1. The authority citation for part 4022 continues to read as follows:

**Authority:** 29 U.S.C. 1302, 1322, 1322b, 1341(c)(3)(D), and 1344.

2. In appendix B to part 4022, Rate Set 87, as set forth below, is added to the table. (The introductory text of the table is omitted.)

**Appendix B to Part 4022—Lump Sum Interest Rates For PBGC Payments**

* * * * *

| Rate set | For plans with a valuation date | | Immediate annuity rate (percent) | Deferred annuities (percent) | | | | |
|---|---|---|---|---|---|---|---|---|
| | On or after | Before | | $i_1$ | $i_2$ | $i_3$ | $n_1$ | $n_2$ |
| * | * | * | * | * | * | * | * | |
| 87 | 1–1–01 | 2–1–01 | 5.00 | 4.25 | 4.00 | 4.00 | 7 | 8 |

3. In appendix C to part 4022, Rate Set 87, as set forth below, is added to the table. (The introductory text of the table is omitted.)

**Appendix C to Part 4022—Lump Sum Interest Rates For Private-Sector Payments**

* * * * * * *

| Rate set | For plans with a valuation date | | Immediate annuity rate (percent) | Deferred annuities (percent) | | | | |
|---|---|---|---|---|---|---|---|---|
| | On or after | Before | | $i_1$ | $i_2$ | $i_3$ | $n_1$ | $n_2$ |
| * | * | * | * | * | * | * | * | |
| 87 | 1–1–01 | 2–1–01 | 5.00 | 4.25 | 4.00 | 4.00 | 7 | 8 |

## PART 4044—ALLOCATION OF ASSETS IN SINGLE-EMPLOYER PLANS

4. The authority citation for part 4044 continues to read as follows:

**Authority:** 29 U.S.C. 1301(a), 1302(b)(3), 1341, 1344, 1362.

5. In appendix B to part 4044, a new entry, as set forth below, is added to the table. (The introductory text of the table is omitted.)

**Appendix B to Part 4044—Interest Rates Used to Value Benefits**

* * * * *

| For valuation dates occurring in the month— | The values of $i_t$ are: | | | | | |
|---|---|---|---|---|---|---|
| | $i_t$ | for t = | $i_t$ | for t = | $i_t$ | for t = |
| * * * | * | | * | * | * | |
| January 2001 | .0670 | 1–20 | .0625 | >20 | N/A | N/A |

Issued in Washington, DC, on this 12th day of December 2000.

**David M. Strauss,**

*Executive Director, Pension Benefit Guaranty Corporation.*

[FR Doc. 00–31990 Filed 12–14–00; 8:45 am]

BILLING CODE 7708–01–P

## DEPARTMENT OF THE INTERIOR

## Office of Surface Mining Reclamation and Enforcement

## 30 CFR Part 920

**[MD–047–FOR]**

## Maryland Regulatory Program

**AGENCY:** Office of Surface Mining Reclamation and Enforcement, Interior.

**ACTION:** Final rule; correction.

**SUMMARY:** This document contains corrections to the final rule [MD–047–FOR], which was published Wednesday, November 8, 2000 (65 FR 66929). The final rule describes Maryland's procedures for financing abandoned mine land reclamation projects that involve the incidental extraction of coal.

**DATES:** Effective December 15, 2000.

**FOR FURTHER INFORMATION CONTACT:** George Rieger, Program Manager, OSM, Appalachian Regional Coordinating Center, 3 Parkway Center, Pittsburgh, PA 15220. Telephone: (412) 937–2153. E-mail: grieger@osmre.gov

**SUPPLEMENTARY INFORMATION:** The final rule amended § 920.15 to add a new entry to the table describing the date the original amendment was submitted, the date of final publication, and the citation/description. As originally published in 65 FR 66929, the instructions were correct but the section heading erroneously read ''§ 920.25 Approval of Maryland regulatory amendments.'' It should have read ''§ 920.15 Approval of Maryland regulatory amendments.''

### Correction of Publication

Accordingly, the publication on November 8, 2000 of the final regulations (MD–047–FOR), which were the subject of FR Doc. 00–28618, is corrected to read as follows:

1. On page 66931, in the third column, the section heading is corrected to read as follows:

**§ 920.15 Approval of Maryland regulatory program amendments.**

* * * * *

Dated: November 20, 2000.

**Allen D. Klein,**

*Regional Director, Appalachian Regional Coordinating Center.*

[FR Doc. 00–32039 Filed 12–14–00; 8:45 am]

BILLING CODE 4310–05–P

## ENVIRONMENTAL PROTECTION AGENCY

## 40 CFR Part 52

**[MD 096–3061; FRL–6916–8]**

## Approval and Promulgation of Air Quality Implementation Plans; Maryland; Nitrogen Oxides Budget Program

**AGENCY:** Environmental Protection Agency (EPA).

**ACTION:** Final rule.

**SUMMARY:** EPA is approving a State Implementation Plan (SIP) revision submitted by the State of Maryland. The revision consists of amendments to Maryland's Nitrogen Oxides ( $NO_X$) Budget Program. The revisions implement the Ozone Transport Commission's (OTC) September 27, 1994 Memorandum of Understanding (MOU) in Maryland. In accordance with the MOU, the revisions implement the Maryland portion of a regional $NO_X$ cap and trade program that significantly reduces $NO_X$ emissions generated within the Ozone Transport Region (OTR). EPA is approving these revisions in accordance with the requirements of the Clean Air Act.

**EFFECTIVE DATE:** This final rule is effective on January 16, 2001.

**ADDRESSES:** Copies of the documents relevant to this action are available for public inspection during normal business hours at the Air Protection Division, U.S. Environmental Protection Agency, Region III, 1650 Arch Street, Philadelphia, Pennsylvania 19103; the Air and Radiation Docket and Information Center, U.S. Environmental Protection Agency, 401 M Street, SW., Washington, DC 20460; and the Maryland Department of the Environment, 2500 Broening Highway, Baltimore, Maryland 21224.

**FOR FURTHER INFORMATION CONTACT:** Cristina Fernandez, (215) 814–2178, or by e-mail at fernandez.cristina@epa.gov.

**SUPPLEMENTARY INFORMATION:**

### I. Background

On August 28,1998, the Maryland Department of the Environment (MDE) submitted a revision to its SIP. The revision to the SIP includes the adoption of new sections .01–.14 under a new chapter, COMAR 26.11.27—Post RACT Requirements for $NO_X$ Sources (Nitrogen Oxides ( $NO_X$) Budget Program) and new sections .01–.13 under a new chapter, COMAR 26.11.28—Polices and Procedures Relating to Maryland's $NO_X$ Budget Program. The revisions implement the Ozone Transport Commission's (OTC) September 27, 1994 Memorandum of Understanding (MOU) in Maryland. In accordance with the MOU, the revisions implement the Maryland portion of a regional $NO_X$ cap and trade program that significantly reduces $NO_X$ emissions generated within the Ozone Transport Region (OTR).

On November 16, 1999, MDE submitted amendments to its August 28, 1998 SIP revision request. The purpose of these amendments was to change the compliance date of the Maryland $NO_X$ Budget Program from May 1, 1999 to May 1, 2000. The revisions to the August 28, 1998 submittal include amendments to Regulations (.04) General Requirements, (.07) Allowance Banking, and (.11) End-of-Season Reconciliation under COMAR 26.11.27 and the repeal of Regulation (.08) Early Reduction Allowances under COMAR 26.11.28. On March 20, 2000, MDE submitted amendments to its August 28, 1998 SIP revision request consisting of two enforceable consent agreements between MDE and the Baltimore Gas and Electric Company and the Potomac Electric Power Company. These consent agreements impose special conditions and time lines for both companies regarding the implementation of Maryland's $NO_X$ Budget Trading Program requirements.

On October 19, 2000 (65 FR 62671), EPA published a notice of proposed rulemaking (NPR) for the State of Maryland proposing to approve the August 28, 1998 SIP revision request as amended by the November 16, 1999 and March 20, 2000 submittals. That NPR

provided for a public comment period ending on November 9, 2000. On November 9, 2000 (65 FR 67319), EPA published a notice extending the comment period to November 20, 2000. A detailed description of these SIP revisions and EPA's rationale for approving were provided in the October 19, 2000 NPR and will not be restated here. EPA received no comments on its proposed action to approve this SIP revision.

## II. Final Action

EPA is approving a revision to the Maryland SIP consisting of COMAR 26.11.27, Post RACT Requirements for $NO_X$ Sources ( $NO_X$ Budget Program) and COMAR 26.11.28, Polices and Procedures Relating to Maryland's $NO_X$ Budget Program, as submitted on August 28, 1998 and as amended on November 16, 1999 and March 20, 2000. These revisions implement Maryland's portion of Phase II of the OTC's MOU to reduce nitrogen oxides. Moreover, this SIP revision is necessary for full approval of the attainment demonstration SIP for the Metropolitan Washington, DC ozone nonattainment area.

## III. Administrative Requirements

### *A. General Requirements*

Under Executive Order 12866 (58 FR 51735, October 4, 1993), this action is not a ''significant regulatory action'' and therefore is not subject to review by the Office of Management and Budget. This action merely approves state law as meeting federal requirements and imposes no additional requirements beyond those imposed by state law. Accordingly, the Administrator certifies that this rule will not have a significant economic impact on a substantial number of small entities under the Regulatory Flexibility Act (5 U.S.C. 601 *et seq.*). Because this rule approves pre-existing requirements under state law and does not impose any additional enforceable duty beyond that required by state law, it does not contain any unfunded mandate or significantly or uniquely affect small governments, as described in the Unfunded Mandates Reform Act of 1995 (Public Law 104–4). For the same reason, this rule also does not significantly or uniquely affect the communities of tribal governments, as specified by Executive Order 13084 (63 FR 27655, May 10, 1998). This rule will not have substantial direct effects on the States, on the relationship between the national government and the States, or on the distribution of power and responsibilities among the various levels of government, as specified in Executive Order 13132 (64 FR 43255, August 10, 1999), because it merely approves a state rule implementing a federal standard, and does not alter the relationship or the distribution of power and responsibilities established in the Clean Air Act. This rule also is not subject to Executive Order 13045 (62 FR 19885, April 23, 1997), because it is not economically significant. In reviewing SIP submissions, EPA's role is to approve state choices, provided that they meet the criteria of the Clean Air Act. In this context, in the absence of a prior existing requirement for the State to use voluntary consensus standards (VCS), EPA has no authority to disapprove a SIP submission for failure to use VCS. It would thus be inconsistent with applicable law for EPA, when it reviews a SIP submission, to use VCS in place of a SIP submission that otherwise satisfies the provisions of the Clean Air Act. Thus, the requirements of section 12(d) of the National Technology Transfer and Advancement Act of 1995 (15 U.S.C. 272 note) do not apply. As required by section 3 of Executive Order 12988 (61 FR 4729, February 7, 1996), in issuing this rule, EPA has taken the necessary steps to eliminate drafting errors and ambiguity, minimize potential litigation, and provide a clear legal standard for affected conduct. EPA has complied with Executive Order 12630 (53 FR 8859, March 15, 1988) by examining the takings implications of the rule in accordance with the ''Attorney General's Supplemental Guidelines for the Evaluation of Risk and Avoidance of Unanticipated Takings'' issued under the executive order. This rule does not impose an information collection burden under the provisions of the Paperwork Reduction Act of 1995 (44 U.S.C. 3501 *et seq.*).

### *B. Submission to Congress and the Comptroller General*

The Congressional Review Act, 5 U.S.C. 801 *et seq.,* as added by the Small Business Regulatory Enforcement Fairness Act of 1996, generally provides that before a rule may take effect, the agency promulgating the rule must submit a rule report, which includes a copy of the rule, to each House of the Congress and to the Comptroller General of the United States. EPA will submit a report containing this rule and other required information to the U.S. Senate, the U.S. House of Representatives, and the Comptroller General of the United States prior to publication of the rule in the **Federal Register**. This rule is not a ''major rule'' as defined by 5 U.S.C. 804(2).

### *C. Petitions for Judicial Review*

Under section 307(b)(1) of the Clean Air Act, petitions for judicial review of this action must be filed in the United States Court of Appeals for the appropriate circuit by February 13, 2001. Filing a petition for reconsideration by the Administrator of this final rule does not affect the finality of this rule for the purposes of judicial review nor does it extend the time within which a petition for judicial review may be filed, and shall not postpone the effectiveness of such rule or action. This action to approve Maryland $NO_X$ Budget Program may not be challenged later in proceedings to enforce its requirements. (See section 307(b)(2).)

## List of Subjects in 40 CFR Part 52

Environmental protection, Air pollution control, Incorporation by reference, Nitrogen dioxide, Ozone, Reporting and recordkeeping requirements.

Dated: December 1, 2000.

**Bradley M. Campbell,**

*Regional Administrator, Region III.*

40 CFR part 52 is amended as follows:

## PART 52—[AMENDED]

1. The authority citation for part 52 continues to read as follows:

**Authority:** 42 U.S.C. 7401 *et seq.*

## Subpart V—Maryland

2. Section 52.1070 is amended by adding paragraph (c)(151) to read as follows:

### § 52.1070 Identification of plan.

* * * * *

(c) * * *

(151) Revisions to the Maryland State Implementation Plan submitted on August 28, 1998, November 16, 1999 and March 20, 2000 by the Maryland Department of the Environment:

(i) Incorporation by reference.

(A) Letter of August 28, 1998 from the Maryland Department of the Environment transmitting additions to the Maryland's State Implementation Plan pertaining to the Nitrogen Oxides Budget Program.

(B) Letter of November 16, 1999 from the Maryland Department of the Environment transmitting additions to the Maryland's State Implementation Plan pertaining to the Nitrogen Oxides Budget Program.

(C) Letter of March 20, 2000 from the Maryland Department of the Environment transmitting additions to the Maryland's State Implementation

Plan pertaining to the Nitrogen Oxides Budget Program.

(D) Revisions to COMAR 26.11.27, Post RACT Requirements for $NO_X$ Sources ($NO_X$ Budget Program) and COMAR 26.11.28, Polices and Procedures Relating to Maryland's $NO_X$ Budget Program, effective June 1, 1998.

(*1*) Addition of COMAR 26.11.27.01 through COMAR 26.11.27.14, except COMAR 26.11.27.04, .07 and .11.

(*2*) Addition of COMAR 26.11.28.01 through COMAR 26.11.28.13, except COMAR 26.11.28.08.

(E) Revisions to COMAR 26.11.27, Post RACT Requirements for $NO_X$ Sources ($NO_X$ Budget Program) and COMAR 26.11.28, Polices and Procedures Relating to Maryland's $NO_X$ Budget Program, effective October 18, 1999, consisting of the addition of new COMAR 26.11.27.04, .07 and .11.

(F) Revisions to COMAR 26.11.27, Post RACT Requirements for $NO_X$ Sources ( $NO_X$ Budget Program) and COMAR 26.11.28, Polices and Procedures Relating to Maryland's $NO_X$ Budget Program, consisting of the consent agreement between the Maryland Department of the Environment and the Potomac Electric Power Company, effective September 13, 1999.

(G) Revisions to COMAR 26.11.27, Post RACT Requirements for $NO_X$ Sources ( $NO_X$ Budget Program) and COMAR 26.11.28, Polices and Procedures Relating to Maryland's $NO_X$ Budget Program, consisting of the consent agreement between the Maryland Department of the Environment and the Baltimore Gas & Electric Company, effective November 19, 1999.

(ii) Additional Material—Remainder of August 28, 1998, November 16, 1999 and March 20, 2000 submittals pertaining to the Nitrogen Oxides Budget Program.

[FR Doc. 00–32001 Filed 12–14–00; 8:45 am]

BILLING CODE 6560–50–P

---

## ENVIRONMENTAL PROTECTION AGENCY

## 40 CFR Part 52

**[PA–4096a; FRL–6577–9 ]**

## Approval and Promulgation of Air Quality Implementation Plans; Pennsylvania; Approval of VOC and $NO_X$ RACT Determinations for Individual Sources

**AGENCY:** Environmental Protection Agency (EPA).

**ACTION:** Direct final rule.

**SUMMARY:** EPA is taking direct final action on revisions to the Commonwealth of Pennsylvania's State Implementation Plan (SIP). The revisions establish and require reasonably available control technology (RACT) for 56 major sources of volatile organic compounds (VOC) and nitrogen oxides ( $NO_X$). EPA is approving these revisions to establish RACT requirements in the SIP in accordance with the Clean Air Act.

**DATES:** This rule is effective on February 13, 2001 without further notice, unless EPA receives adverse written comment by January 16, 2001. If EPA receives such comments, it will publish a timely withdrawal of the direct final rule in the **Federal Register** and inform the public that the rule will not take effect.

**ADDRESSES:** Written comments should be mailed to Makeba Morris, Chief, Permits and Technical Assessment Branch, Air Protection Division, Mailcode 3AP11, U.S. Environmental Protection Agency, Region III, 1650 Arch Street, Philadelphia, Pennsylvania 19103. Copies of the documents relevant to this action are available for public inspection during normal business hours at the Air Protection Division, U.S. Environmental Protection Agency, Region III, 1650 Arch Street, Philadelphia, Pennsylvania 19103; the Air and Radiation Docket and Information Center, U.S. Environmental Protection Agency, 401 M Street, SW, Washington, DC 20460; and the Pennsylvania Department of Environmental Protection, Bureau of Air Quality Control, P.O. Box 8468, 400 Market Street, Harrisburg, Pennsylvania 17105.

**FOR FURTHER INFORMATION CONTACT:** Ray Chalmers at (215) 814–2061 for information on sources #1 through #17, Melik Spain at (215) 814–2299 for information on sources #18 through #50, or Helene Drago at (215) 814–5796 for information on sources #51 through 56.

**SUPPLEMENTARY INFORMATION:**

### I. Background

On September 20, 1995, December 8, 1995, January 10, 1996, March 21, 1996, April 16, 1996, May 2, 1996, June 10, 1996, September 13, 1996, January 21, 1997, July 2, 1997, November 4, 1997, December 31, 1997, March 24, 1998, April 20, 1998, May 29, 1998, July 24, 1998, December 7, 1998, February 2, 1999, March 3, 1999, April 9, 1999, and April 20, 1999, the Commonwealth of Pennsylvania (the Commonwealth) submitted formal revisions to its SIP to establish RACT for major sources of VOCs and $NO_X$. EPA is approving the Commonwealth's RACT submittals for 56 of these sources in this rulemaking action. EPA will address the Commonwealth's submittals for other sources in later rulemaking actions. The Commonwealth's submittals consist of plan approvals, operating permits, and/or compliance permits which contain the RACT requirements for each source. In accordance with Pennsylvania's SIP revision request, EPA is approving only the RACT related requirements contained in these plan approvals, operating permits, and/or compliance permits.

Pursuant to sections 182(b)(2) and 182(f) of the Clean Air Act (CAA), Pennsylvania is required to implement RACT for all major VOC and $NO_X$ sources. The major source size is determined by its location, the classification of that area and whether it is located in the ozone transport region (OTR), which is established by the CAA. The Pennsylvania portion of the Philadelphia-Wilmington-Trenton ozone nonattainment area (the Philadelphia area) consists of Bucks, Chester, Delaware, Montgomery, and Philadelphia Counties and is classified as severe. Under section 184 of the CAA, at a minimum, moderate ozone nonattainment area requirements (including RACT as specified in sections 182(b)(2) and 182(f)) apply throughout the OTR. The entire Commonwealth of Pennsylvania is in the OTR. Therefore, RACT is applicable statewide in Pennsylvania.

### II. Summary of the SIP Revision

The details of the RACT requirements for each source are discussed in the technical support documents (TSDs) found in the docket for this rulemaking action and will not be reiterated in this document. Briefly, EPA is approving revisions to the Pennsylvania SIP establishing and requiring VOC and/or $NO_X$ RACT for 56 major sources. The RACT determinations and requirements are included in plan approvals, operating permits and/or compliance permits. Several of the plan approvals, operating permits, and/or compliance permits also contain provisions which are not relevant to the requirements for RACT. These provisions are not part of Pennsylvania's SIP revision requests to EPA.

*RACT Determinations*

The following table identifies the individual plan approvals, operating permits and/or compliance permits EPA is approving. The specific emission limitations and other RACT requirements for these sources are summarized in the accompanying TSDs, which are available upon further request

from the EPA Region III office listed in the **ADDRESSES** section of this document.

PENNSYLVANIA—VOC AND $NO_X$ RACT DETERMINATIONS FOR INDIVIDUAL SOURCES

| Source | County | Plan approval (PA #) Operating permit (OP #) Compliance permit (CP #) (date of issuance) | Source type | Major source pollutant |
|---|---|---|---|---|
| 1. Boeing Company, Defense and Space Group, Helicopters Division. | Delaware | CP–23–0009 | Helicopter Manufacturing | VOC/$NO_X$ |
| 2. Delaware County Regional Water Quality Control Authority. | Delaware | OP–23–0032 | Wastewater Treatment Plant | VOC/$NO_X$ |
| 3. Delbar Products | Bucks | OP–09–0025 | Truck Mirror Manufacturer | VOC |
| 4. Department of Public Welfare—Norristown State Hospital. | Montgomery | OP–46–0060 | Hospital | $NO_X$ |
| 5. Dopaco, Inc. | Chester | CP–15–0029 | Printer | VOC |
| 6. Garlock, Inc. | Bucks | CP–09–0035 PA–09–0035 | Thin Film and Tape Manufacturer | VOC |
| 7. Interstate Brands Corp. | Philadelphia | PLID: 5811 | Bakery | VOC/$NO_X$ |
| 8. J.B. Slevin, Inc. | Delaware | OP–23–0013 | Printer | VOC |
| 9. Laclede Steel Company | Bucks | OP–09–0023 | Steel Products Manufacturer | VOC/$NO_X$ |
| 10. LNP Engineering Plastics | Chester | OP–15–0035 | Polymer Pellet Manufacturer | VOC |
| 11. Lukens Steel Company | Montgomery | OP–15–0010 | Steel Plate Producer | VOC/$NO_X$ |
| 12. Nabisco, Inc. | Philadelphia | 15–3201 | Bakery | VOC/$NO_X$ |
| 13. PECO—Croydan Station | Bucks | OP–09–0016a | Turbines | VOC/$NO_X$ |
| 14. PECO—Limerick Station | Montgomery | OP–46–0038 | Boilers | VOC/$NO_X$ |
| 15. PECO—Fairless | Bucks | OP–09–0066 | Boilers | VOC/$NO_X$ |
| 16. PECO—West Conshohocken | Montgomery | OP–46–0045A | Turbine | $NO_X$ |
| 17. PENELEC—Front Street Station | Erie | 25–0041 | Boilers | $NO_X$ |
| 18. American Inks & Coating Corp. | Chester | 15–0026A | Inorganic Pigment Manufacturer | VOC |
| 19. Avery Denison Corp. | Bucks | 09–001A | Surface Coating | VOC/$NO_X$ |
| 20. Cabot Performance Materials | Berks/Montgomery. | 46–0037 | Chemical Manufacturer | VOC/$NO_X$ |
| 21. Cleveland Steel Container | Bucks | 09–0022 | Steel Products Manufacturer | VOC |
| 22. CMS Gilbreth Packaging Systems | Bucks | 09–0036 | Graphic Arts | VOC |
| 23. CMS Gilbreth Packaging Systems | Bucks | 09–0037 | Graphic Arts | VOC |
| 24. Congoleum Corporation | Delaware | 23–0021 | Graphic Arts | VOC |
| 25. Epsilon Products Corporation | Delaware | 23–0012 | Synthetic Materials | VOC |
| 26. Foamex International Inc. | Delaware | 23–006A | Synthetic Materials | VOC/$NO_X$ |
| 27. Forms; Spectra Graphics | Montgomery | 46–0023 | Graphic Arts | VOC |
| 28. Global Packaging, Inc. | Montgomery | 46–0026 | Graphic Arts | VOC |
| 29. Jefferson Smurfit Corp. | Montgomery | 46–0041 | Graphic Arts | VOC |
| 30. Jefferson Smurfit Corp. | Montgomery | 46–0062 | Graphic Arts | VOC |
| 31. Lonza Inc. | Montgomery | 46–0025 | Chemical Manufacturer | VOC/$NO_X$ |
| 32. Markel Corp. | Montgomery | 46–0081 | Synthetic Materials | VOC |
| 33. McCorquodale Security Cards, Inc. | Chester | 15–0037 | Graphic Arts | VOC |
| 34. Mike-Rich, Inc. | Bucks | 09–0021 | Graphic Arts | VOC |
| 35. Minnesota Mining and Manufacturing | Bucks | CP 09–0005 | Boilers and Process Sources | VOC/$NO_X$ |
| 36. MM Biogas Power LLC | Montgomery | 46–0067 | Low Emission Combustion | $NO_X$ |
| 37. Norwood Industries | Chester | 15–0014A | Surface Coating | VOC/$NO_X$ |
| 38. NVF Company | Chester | 15–0030 | Synthetic Materials | VOC/$NO_X$ |
| 39. Occidental Chemical Corp. | Montgomery | 46–0015 | Synthetic Materials | VOC/$NO_X$ |
| 40. Philadelphia Newspaper, Inc. | Montgomery | 46–0012 | Graphic Arts | VOC |
| 41. Procter & Gamble Paper Products Co. | Wyoming | 66–0001 | Paper & Pulp Mill | VOC/$NO_X$ |
| 42. Quebecor Printing Atglen Inc. | Chester | 15–0002 | Graphic Arts | VOC |
| 43. Sartomer Company, Inc. | Chester | 15–0015 | Chemical Manufacturer | VOC |
| 44. Silberline Manufacturing | Carbon | 54–0041 | Synthetic Materials | VOC |
| 45. Smithkline Beecham Research Co. | Montgomery | 46–0031 | Pharmaceutical Manufacturer | $NO_X$ |
| 46. Sullivan Graphics, Inc. | York | 67–2023 | Graphic Arts | VOC |
| 47. Sun Company, Inc. (R&M) | Delaware | 23–0010 | Petroleum Transfer Station | VOC |
| 48. Sun Company, Inc. (R&M) | Delaware | 23–0011 | Petroleum Transfer Station | VOC |
| 49. Universal Packaging Corp. | Montgomery | 46–0156 | Graphic Arts | VOC |
| 50. Zenith Products Corp. | Delaware | 23–0008 | Surface Coating | VOC |
| 51. Budd Company | Philadelphia | 51–1564 | Industrial Boiler | $NO_X$ |
| 52. Bellevue Cogeneration Plant | Philadelphia | 51–6513 | Industrial Boiler | $NO_X$ |
| 53. MSC Prefinish Metals | Bucks | 09–0030 | Surface Coater | VOC/$NO_X$ |
| 54. Temple University | Philadelphia | 51–8906 | Industrial Boiler—Medical Incinerator | $NO_X$ |
| 55. Trigen-Schuylkill Station | Philadelphia | 51–4942 | Utility | $NO_X$ |
| 56. Trigen-Edison Station | Philadelphia | 51–4902 | Utility | $NO_X$ |

EPA is publishing this rule without prior proposal because we view this as a noncontroversial amendment and anticipate no adverse comment. However, in the ''Proposed Rules'' section of today's **Federal Register**, EPA is publishing a separate document that will serve as the proposal to approve the SIP revision if adverse comments are filed. This direct final rule will be effective on February 13, 2001 without further notice unless we receive adverse comment by January 16, 2001. If EPA receives adverse comment, EPA will publish a timely withdrawal in the **Federal Register** informing the public that the rule will not take effect. EPA will address all public comments in a subsequent final rule based on the proposed rule. EPA will not institute a second comment period on this action. Any parties interested in commenting must do so at this time. Please note that if EPA receives adverse comment on an amendment, paragraph, or section of this rule and if that provision may be severed from the remainder of the rule, EPA may adopt as final those provisions of the rule that are not the subject of an adverse comment.

## III. Final Action

EPA is approving revisions to the Commonwealth of Pennsylvania's SIP submitted by the Department of Environmental protection which establish and require RACT for 56 major sources of $NO_X$ and VOC located in Pennsylvania.

## IV. Administrative Requirements

### *A. General Requirements*

Under Executive Order 12866 (58 FR 51735, October 4, 1993), this action is not a ''significant regulatory action'' and therefore is not subject to review by the Office of Management and Budget. This action merely approves state law as meeting federal requirements and imposes no additional requirements beyond those imposed by state law. Accordingly, the Administrator certifies that this rule will not have a significant economic impact on a substantial number of small entities under the Regulatory Flexibility Act (5 U.S.C. 601 *et seq.*). Because this rule approves pre-existing requirements under state law and does not impose any additional enforceable duty beyond that required by state law, it does not contain any unfunded mandate or significantly or uniquely affect small governments, as described in the Unfunded Mandates Reform Act of 1995 (Public Law 104–4). For the same reason, this rule also does not significantly or uniquely affect the communities of tribal governments, as specified by Executive Order 13084 (63 FR 27655, May 10, 1998). This rule will not have substantial direct effects on the States, on the relationship between the national government and the States, or on the distribution of power and responsibilities among the various levels of government, as specified in Executive Order 13132 (64 FR 43255, August 10, 1999), because it merely approves a state rule implementing a federal standard, and does not alter the relationship or the distribution of power and responsibilities established in the Clean Air Act. This rule also is not subject to Executive Order 13045 (62 FR 19885, April 23, 1997), because it is not economically significant.

In reviewing SIP submissions, EPA's role is to approve state choices, provided that they meet the criteria of the Clean Air Act. In this context, in the absence of a prior existing requirement for the State to use voluntary consensus standards (VCS), EPA has no authority to disapprove a SIP submission for failure to use VCS. It would thus be inconsistent with applicable law for EPA, when it reviews a SIP submission, to use VCS in place of a SIP submission that otherwise satisfies the provisions of the Clean Air Act. Thus, the requirements of section 12(d) of the National Technology Transfer and Advancement Act of 1995 (15 U.S.C. 272 note) do not apply. As required by section 3 of Executive Order 12988 (61 FR 4729, February 7, 1996), in issuing this rule, EPA has taken the necessary steps to eliminate drafting errors and ambiguity, minimize potential litigation, and provide a clear legal standard for affected conduct. EPA has complied with Executive Order 12630 (53 FR 8859, March 15, 1988) by examining the takings implications of the rule in accordance with the ''Attorney General's Supplemental Guidelines for the Evaluation of Risk and Avoidance of Unanticipated Takings'' issued under the executive order. This rule does not impose an information collection burden under the provisions of the Paperwork Reduction Act of 1995 (44 U.S.C. 3501 *et seq.*).

### *B. Submission to Congress and the Comptroller General*

The Congressional Review Act, 5 U.S.C. 801 *et seq.*, as added by the Small Business Regulatory Enforcement Fairness Act of 1996, generally provides that before a rule may take effect, the agency promulgating the rule must submit a rule report, which includes a copy of the rule, to each House of the Congress and to the Comptroller General of the United States. Section 804 exempts from section 801 the following types of rules: (1) Rules of particular applicability; (2) rules relating to agency management or personnel; and (3) rules of agency organization, procedure, or practice that do not substantially affect the rights or obligations of non-agency parties. 5 U.S.C. 804(3). EPA is not required to submit a rule report regarding today's action under section 801 because this is a rule of particular applicability establishing source-specific requirements for 56 named sources.

### *C. Petitions for Judicial Review*

Under section 307(b)(1) of the Clean Air Act, petitions for judicial review of this action must be filed in the United States Court of Appeals for the appropriate circuit by February 13, 2001. Filing a petition for reconsideration by the Administrator of this final rule does not affect the finality of this rule for the purposes of judicial review nor does it extend the time within which a petition for judicial review may be filed, and shall not postpone the effectiveness of such rule or action. This action approving Pennsylvania's source-specific RACT requirements for 56 sources may not be challenged later in proceedings to enforce its requirements. (See section 307(b)(2).)

## List of Subjects in 40 CFR Part 52

Environmental protection, Air pollution control, Hydrocarbons, Incorporation by reference, Intergovernmental relations, Nitrogen dioxide, Ozone.

**Editorial note.** This document was received at the Office of the Federal Register on December 6, 2000.

Dated: March 23, 2000.

**Bradley M. Campbell,**

*Regional Administrator, Region III.*

40 CFR part 52 is amended as follows:

## PART 52—[AMENDED]

1. The authority citation for Part 52 continues to read as follows:

**Authority:** 42 U.S.C. 7401 *et seq.*

## Subpart NN—Pennsylvania

2. Section 52.2020 is amended by adding paragraph (c)(143) to read as follows:

### § 52.2020 Identification of plan.

* * * * *

(c) * * *

(143) Revisions to the Pennsylvania Regulations, Chapter 129.91 pertaining to VOC and $NO_X$ RACT, submitted by the Pennsylvania Department of Environmental Protection on September

20, 1995, December 8, 1995, January 10, 1996, March 21, 1996, April 16, 1996, May 2, 1996, June 10, 1996, September 13, 1996, January 21, 1997, July 2, 1997, November 4, 1997, December 31, 1997, March 24, 1998, April 20, 1998, May 29, 1998, July 24, 1998, December 7, 1998, February 2, 1999, March 3, 1999, April 9, 1999, and April 20, 1999.

(i) Incorporation by reference.

(A) Letters submitted by the Pennsylvania Department of Environmental Protection transmitting source-specific VOC and/or $NO_X$ RACT determinations, in the form of plan approvals, operating permits, or compliance permits, or supplementary information, on the following dates: September 20, 1995, December 8, 1995, January 10, 1996, March 21, 1996, April 16, 1996, May 2, 1996, June 10, 1996, September 13, 1996, January 21, 1997, July 2, 1997, November 4, 1997, December 31, 1997, March 24, 1998, April 20, 1998, May 29, 1998, July 24, 1998, December 7, 1998, February 2, 1999, March 3, 1999, April 9, 1999, and April 20, 1999.

(B) Plan approvals (PA), Operating permits (OP), and Compliance Permits (CP):

*(1)* Boeing Company, Defense and Space Group, Helicopters Division, CP–23–0009, issued 09/03/1997, except for the expiration date, the requirements of Conditions 5.B, 6.C, 7.C, 8.C, 9.D, 10.B, and 11.B, and any of their associated recordkeeping and reporting requirements.

*(2)* Delaware County Regional Water Quality Control Authority's Western Regional Treatment Plant (DELCORA WRTP), OP–23–0032, issued 03/12/1997, as revised on 05/16/1997, except for the expiration date and the requirements of Conditions 9, 12, 14, 15, 16, and any associated recordkeeping and reporting requirements.

*(3)* Delbar Products, Inc., OP–09–0025, issued 02/01/96, except for the expiration date and the requirements of Conditions 3, 4, 5, 6.A, 6.B, 6.C.1, 6.C.2, 8 and 9.

*(4)* Department of Public Welfare's Norristown State Hospital, OP–46–0060, issued 01/21/1998, except for the expiration date and Conditions 3, 4, 5, 8, 9, 14, 15, 16, 17, 18, 19, 20, 21, 22, 23, and 24.

*(5)* Dopaco, Inc., CP–15–0029, issued 03/06/1996, except for the expiration date and the requirements of Conditions 4, 5, 6, 7, 8, 9, 10.C, 10.D, 10.H.3, 10.H.4, 11, 12, 13, 14, 15, 16, and 17.

*(6)* Garlock, Inc., PA–09–0035, issued 03/12/1997, except for the expiration date and Conditions 2, 10, 13, 15.B–F.

*(7)* Interstate Brands Corporation, PLID 5811, effective 04/10/1995, except for Conditions 1.A(1), (2), (4) and (5), 2.B, 2.C, 7, 8, and 9. (Note: Interstate Brands Corporation acquired this facility through purchase of Continental Baking Company, which was the owner of the facility when the RACT permit was issued. Accordingly, Continental Baking Company is shown as the facility owner on the permit.)

*(8)* J.B. Slevin Company, Inc., OP–23–0013, issued 09/03/1996, except for the expiration date and the requirements of Conditions 4, 5.A. and 8, 9, and 10.

*(9)* Laclede Steel Company, OP–09–0023, issued 7/17/1995, except for the expiration date and requirements of Conditions 3 and 7.

*(10)* LNP Engineering Plastics, Inc., OP–15–0035, issued 10/31/97, except for the expiration date, Conditions 3, 4, 5, 6, 7 (as it relates to non-criteria pollutants), 10 (as it relates to keeping records required to show compliance with Condition 5), 12, 15, 16, and 21.

*(11)* Lukens Steel Company, OP–15–0010, issued 05/06/1999, except for the expiration date, Conditions 4, 5, 6, 7, 8, 9, 11, 12, 13, 14, 15, 16, 17, 18, 19, 20, 21, 22, 23, 24, 25, 26, 27, 28, 29, 30, 31, 32, 33, and 34. Permit Condition 3 lists units subject to RACT requirements. All of the listed units are subject to VOC RACT requirements, but only the C and D electric arc furnaces, the Drever Furnace, the NAB Furnaces, the nine batch heat treatment furnaces, the EMS boiler, the Soaking Pits and the ZIP line process are subject to $NO_X$ RACT requirements.

*(12)* Nabisco Biscuit Co., PLID 3201, effective 04/10/1995, except for Conditions 1.A(1), 1.A(3), 1.A(4), 1.A(5), 1.A(6), 2.B, 2.C, 7, 8, and 9.

*(13)* PECO Energy Company, Croydon Station, OP–09–0016A, issued 12/20/1996, except for the expiration date, Conditions 4, 5, 7(C), 7(D), 7(E) and 10.

*(14)* PECO Energy Company, Limerick Station, OP–46–0038, issued 7/25/1995, except for the expiration date, Conditions 4, 5, 8(B), 9(B), 10(A)(3), 10(C), and 11.

*(15)* PECO Energy Company, Fairless Works, OP–09–0066, issued 12/31/1998, as revised on 04/06/1999, except for the expiration date, Conditions 4, 5, 6, 7, and 8, the portion of Condition 10 pertaining to sulfur content of fuel oil, the provision of Condition 11 (B) pertaining to annual $NO_X$ emissions, the provisions in 11(C) regarding landfill gas and Condition No. 15.

*(16)* PECO Energy Company, West Conshohocken Plant, OP–46–0045A, issued 12/04/1997, except for the expiration date and the provisions of Conditions 3B, 3C, 3D, 4, 5, 6(B)(2), 7, 8, 9D, 9E, and 9F.

*(17)* Pennsylvania Electric Company (owner) and GPU Generation, Inc. (operator), Front Street Plant, 25–0041, issued 02/25/1999, except for Conditions 7, 8, 9, and 10.

*(18)* American Inks and Coatings Corporation, OP 15–0026A, issued 01/10/1997, except for the expiration date, all ton per year limitations, and Conditions 3, 4, 5, 7(A), 8(A), 8(C), 9, 11, 12, 13, and 14.

*(19)* Avery Dennison Corporation (Fasson Roll Division), OP 09–0001A, issued 10/02/1997, except for the expiration date, Conditions 3, 4, 5, 7, 8, 9(A)1, 9(A)2, 9(A)3, 9(A)4, 9(A)5, 9(A)7, 9(A)8, 9(A)9, 9(B), 9(C), 9(D), 10, 11, 12, 13, and 14.

*(20)* Cabot Performance Materials, OP 46–0037, issued 04/13/1999, except for the expiration date and Conditions 4, 5, 6, 7, 8, 9, 15(b), 15(c), 16, 17, 18, 19, 20, 21, 22, 23, and 24.

*(21)* Cleveland Steel Container Corporation, OP 09–0022, issued 09/30/1996, except for the expiration date, and the allowable ton-VOC/year limits in Condition 4, and Conditions 3, 6, and 8.

*(22)* CMS Gilbreth Packaging Systems, OP 09–0036, issued 01/07/1997, except for the expiration date and Conditions 3, 4, 19, 20, 21, 22, 23, 24, 25, 26, and 27.

*(23)* CMS Gilbreth Packaging Systems, OP 09–0037, issued 04/10/1997, except for the expiration date, Conditions 3, 4, 22, 23, 24, 25, 26, 27, 28, and 29.

*(24)* Congoleum Corporation, OP 23–0021, issued 12/31/1998, except for the expiration date and Conditions 3, 4, 5(A), 5(B), 5(D), 5(E), 6, 7(a), 8, 9, 10, 11, 12, 13, 14, 15, 16, 17, 18, 19, 20, 21, 22, 23, 24, 25, and 26.

(*25*) Epsilon Products Company, OP 23–0012, issued 02/15/1996, except for the expiration date and Conditions 3, 4(B), 4(C), 7, 9, 10, 12, 13, 14, and 15.

(*26*) Foamex International, Inc., OP 23–0006A, issued 09/30/1996, as revised on 3/30/1999, except for the expiration date and Conditions 3, 4, 5, 8, 9, 10, 11, 12, 13, and 14.

(*27*) Forms, Inc., Spectra Graphics, OP 46–0023, issued 11/09/1995, as revised on 03/25/1998, except for the expiration date, Conditions 4, the VOC lbs/hr limits in Condition 5 for both the heatset and nonheatset press materials, 6, 7, 9, 11 and 12.

(*28*) Global Packaging, Inc., OP 46–0026, issued 08/30/1996, as revised on 12/24/1997, except for the expiration date, Conditions 3, 4, 5, 6, the nitrogen oxide limits in Condition 7(B), 10, and 11. (Note: Pennsylvania issued the revised permit to Global Packaging, Inc. Global Packaging, Inc. acquired this facility through purchase of BG Packaging, Inc., which had owned the facility when the original RACT permit

was issued. Accordingly, BG Packaging, Inc. is shown as the facility owner on the original permit.)

(*29*) Jefferson Smurfit Corporation (U.S.), OP 46–0041, issued 04/18/1997, except for the expiration date, Conditions 3, 4, 5, 15(B), 16, 17, 18, 19, 20, 21, and 22 and the record keeping and monitoring requirements of Condition No. 15(A) associated with Condition 4.

(*30*) Jefferson Smurfit Corporation, OP 46–0062, issued 07/15/1996, except for the expiration date and Conditions 3 and 5(F).

(*31*) Lonza, Inc., OP 46–0025, issued 04/22/1997, as revised on 06/16/1998, except for the expiration date, Conditions 3, 6, 7, 8, 9, 10, 11, 12, 13(B), 13(D) and 13(E).

(*32*) Markel Corporation, OP 46–0081, issued 04/09/1999, except for the expiration date and Conditions 3, 4, 5, 11, 19, 20, 21, 22, 23, 24, 25, 26, and 27.

(*33*) McCorquodale Security Cards, Inc., OP 15–0037, issued 09/03/1996, except for the expiration date and Conditions 3, 4, 5, 6, 7, 8, 9, 11, 15, 16, and 17.

(*34*) Mike-Rich, Inc., OP 09–0021, issued 12/20/1996, except for the expiration date, Conditions 3, 4, 5, 7, and the general conditions listed in Condition 8.

(*35*) Minnesota Mining and Manufacturing Co. (3M), CP 09–0005, issued 08/08/1996, except for the expiration date and Conditions 4, 5, 6, 7, 8, 9, 10, 11(C), 12 (C), 12(D), 13(A), 13(C), 13(D), 14, 15, 16, 17, 18, 19, 20, 21, and 22.

(*36*) MM Biogas Power LLC, OP 46–0067, issued 10/31/1997, except for the expiration date and Conditions 3, 4, 7, 9 (as it pertains to the Superior engine), 10, 11, 12, 13, 14, 15, 16, 17, 18, 19, 20 and 21.

(*37*) Norwood Industries, Inc., OP 15–0014A, issued 12/20/1996, as revised on 12/02/1999, except for the expiration date, Conditions 3, 4, 5, 6(A), 6(B), 6(C), 6(D)1, 6(D)2, 6(D)3, 6(D)5, 6(E), 6(F)1, 6(F)2, 6(F)3, 6(F)5, 6(F)6, 6(G), 7, 8(A), 8(C), 8(D), 8(F), 8(G), 8(H), 8(I), and 9.

(*38*) NVF Company, OP 15–0030, issued 04/13/1999, except for the expiration date and Conditions 3, 4, 5, 6, 8, 9, 10, 11, 12, 13, 14, 15, 16, 17, 18, 19, 20, 21, 22, 23, 24, 25, 26, and 27.

(*39*) Occidental Chemical Corporation, OP 46–0015, issued 11/07/1996, except for the expiration date and Conditions 4, 5, 6(A), the capacity factor in 6(B), 6(E), 7, 8(A), 8(C), 8(D)1, 8(D)2a, 8(D)2b, 8(D)2c, 8(D)2d, 8(D)5, 8(E), 9, 10, 11(B), 12.

(*40*) Philadelphia Newspapers, Incorporated, OP 46–0012, issued 08/30/1996, as revised on 03/15/2000, except for the expiration date, and Conditions 3, 4(A), 5, 9, and 11.

(*41*) Procter & Gamble Paper Products Company, OP 66–0001, issued 04/04/1997, except for the expiration date, and Conditions 3, 4, 6, 7, 8, 9, 10, 11, 14, 15, 17, 18, 19, 20, 21, and 22.

(*42*) Quebecor Printing Atglen, Inc., OP 15–0002, issued 12/10/1996 except for the expiration date and Conditions 3, 4(A) except as it relates to cleaning solvents, 4(B), 4(C), 5, 6, 7, 8(A), 8(B) and 8(D).

(*43*) Sartomer Company, Inc., OP 15–0015, issued 01/17/1996, as revised on 03/25/1998, except for the expiration date and Conditions 3, 4, 5, 8, 13, 14, 15(A), and 16.

(*44*) Silberline Manufacturing Company, Inc., OP 54–0041, issued 04/19/1999, except for the expiration date and Conditions 3, 4, 5, 6, 9, 12, 13, 14, 15, 16, 17, 18, 19, 20, and 21.

(*45*) SmithKline Beecham Research Company, OP 46–0031, issued 10/31/1997, as revised on 05/01/1998, except for the expiration date and Conditions 3, 4, 5(a) as it pertains to the Cleaver Brooks boiler rated at 31.4 MMbtu/hr., 6(b), and 6(c).

(*46*) Sullivan Graphics, Inc., OP 67–2023, issued 08/22/1995, except for the expiration date and Conditions 4, 5, 9(c), 9(d), 10, 19, 20, and 24.

(*47*) Sun Company, Inc. (R&M), OP 23–0010, issued 10/31/1996, except for the expiration date and Conditions 3, 4, 6, 7, 8 and 10.

(*48*) Sun Company, Inc. (R&M), OP 23–0011, issued 10/31/1996, except for the expiration date and Conditions 3, 4, 6 and 8.

(*49*) Universal Packaging Corporation, OP 46–0156, issued 04/08/1999, except for the expiration date, and Conditions 3, 4, 5, 9 and 11.

(*50*) Zenith Products Corporation, OP 23–0008, issued 04/07/1997, except for the expiration date, and Conditions 4, 6, 7, 8(A), 8(B), 9(B), 10, 11, and 12.

(*51*) Budd Company, PLID 51–1564, effective 12/28/1995, except for Conditions 7, 8 and 9.

(*52*) Bellevue Cogeneration Plant, PLID 06513, effective 4/10/1995, except for Conditions 1.A(2), 2.B, 4.B, 7, 8 and 9.

(*53*) MSC Pre Finish Metals, Inc., OP–09–0030, issued 11/7/1996, as revised on 03/31/1998, except for the expiration date and Conditions 3, 4, 5, 6.A, 6.B.1, 6.B.5, 6.B.9, 6.C, 6.D.1 (a, b, and e), 8.A, 8.B, 9, 10.E, and 11.

(*54*) Temple University, Health Sciences Center, PLID 8906, effective 5/27/1995, excluding Conditions 1.A(2), 2.B, 6, 7, and 8.

(*55*) Trigen—Schuylkill Station, PLID 04942, effective 5/29/1995, except for Conditions related to low $NO_X$ burners found at 1.B(1) and 2(A), the provision in Condition 3.A(1) limiting $NO_X$ emissions to 1646 tons per year, 4 (B), 7, 8, and 9.

(*56*) Trigen—Edison Station, PLID 4902, effective 5/29/1995, excluding portions of Condition 3.A.(1) limiting $NO_X$ emissions in tons per year and Conditions 7, 8, and 9.

(C) Letters from the Pennsylvania Department of Environmental Protection, dated 09/21/2000, and 10/20/2000, in which Pennsylvania provided supplementary information regarding many of the permits listed in i(B) above, and in which Pennsylvania specified the permit conditions, listed in i(B) above, which it did not wish to have incorporated into the Pennsylvania State Implementation Plan.

[FR Doc. 00–31463 Filed 12–14–00; 8:45 am]

BILLING CODE 6560–50–P

## DEPARTMENT OF TRANSPORTATION

### Federal Motor Carrier Safety Administration

### 49 CFR Parts 385 and 386

**[Docket No. FMCSA–00–7332]**

**RIN 2126–AA54**

## Sanctions Against Motor Carriers, Brokers, and Freight Forwarders for Failure To Pay Civil Penalties

**AGENCY:** Federal Motor Carrier Safety Administration (FMCSA), DOT.

**ACTION:** Final rule.

**SUMMARY:** The FMCSA implements section 206 of the Motor Carrier Safety Improvement Act of 1999 (MCSIA) by amending the penalty provisions of the rules of practice of the Federal Motor Carrier Safety Regulations (FMCSRs). This action prohibits a motor carrier that does not pay civil penalties assessed by the FMCSA, or that does not arrange and abide by its payment agreements, from operating in interstate commerce. The rule also suspends the registration of a broker, freight forwarder or for-hire motor carrier that has not paid a civil penalty, or arranged and abided by a payment plan. The prohibition or suspension begins on the 91st day after the payment date specified in the final agency order or on the 91st day after the due date of a missed payment arranged in a payment plan. A party that continues to operate in violation of a prohibition or suspension may be subject to additional penalties. However, it will not apply to anyone who is unable to pay a civil

penalty because the person is a debtor in a case under chapter 11 of the Bankruptcy Code.

**DATES:** This final rule is effective on April 16, 2001.

**FOR FURTHER INFORMATION CONTACT:** Ms. Deborah M. Freund, Office of Bus and Truck Standards and Operations, (202) 366–4009, or Mr. Charles Medalen, Office of Chief Counsel, (202) 366–1354, Federal Motor Carrier Safety Administration, 400 Seventh Street, SW., Washington, DC 20590–0001. Office hours are from 7:45 a.m. to 4:15 p.m., e.t., Monday through Friday, except Federal holidays.

**SUPPLEMENTARY INFORMATION:**

## Background

This rulemaking implements section 206 of the Motor Carrier Safety Improvement Act of 1999 (MCSIA) (Public Law 106–159, 113 Stat. 1748, at 1763). Section 206 addresses two issues related to delinquent payment of penalties. Section 206(a) amends 49 U.S.C. 13905(c) by authorizing the Secretary of Transportation (Secretary) to suspend, amend, or revoke any part of the registration of a motor carrier, broker, or freight forwarder if that entity has not paid a civil penalty within 90 days of the time specified by official order for payment, or has not arranged and abided by a payment plan. However, the Secretary may not revoke the registration of a person unable to pay penalties because the person is a debtor in a case under chapter 11 of the Bankruptcy Code (11 U.S.C. 362 *et seq.*).

The term ''registration'' applies to a for-hire motor carrier, freight forwarder, and broker that registers with the FMCSA to provide transportation under 49 U.S.C chapter 139. This includes an entity that held operating authority from the Interstate Commerce Commission as of the effective date of the ICC Termination Act of 1995 (ICCTA) (Public Law 104–88, 109 Stat. 803), as well as an entity registered by the Federal Highway Administration (FHWA) between January 1, 1996, and December 31, 1999, and by the FMCSA on or after January 1, 2000.

Section 206(b) amends 49 U.S.C. 521(b) to prohibit operations in interstate commerce by an owner or operator of a commercial motor vehicle (CMV) who fails to pay a civil penalty, or to arrange and abide by an acceptable payment plan. A CMV owner or operator must cease its interstate operations if it has not paid its fine within 90 days of the time specified by the Secretary's order for payment, or has not arranged and abided by a payment plan. Similar to the exception contained in section 206(a), the Secretary may not apply this prohibition to anyone unable to pay penalties because the person is a debtor in a case under chapter 11 of the Bankruptcy Code.

The rules of practice for motor carrier proceedings are codified in 49 CFR part 386. The most recent amendments (65 FR 7753, February 16, 2000) added proceedings concerning violations of the commercial regulations that were formerly implemented and administered by the Interstate Commerce Commission.

The FMCSA described in the preamble to the NPRM (65 FR 56521, September 19, 2000) how its current enforcement procedures would be affected by Section 206. Briefly, a compliance review may be conducted in response to a request to change a safety rating, or to investigate potential violations of regulations and complaints. If the compliance review results in the initiation of an enforcement action, the official document used to notify a broker, freight forwarder, or motor carrier is a Notice of Claim (NOC). If the broker, freight forwarder, or motor carrier does not respond, the NOC becomes the final agency order by default 25 days after it was served, and the party is so notified. If the broker, freight forwarder, or motor carrier timely responds and challenges the NOC, the FMCSA's Chief Safety Officer opens an administrative proceeding. If the NOC is upheld, a final agency order (FAO) is issued which usually directs the broker, freight forwarder, or motor carrier, to pay a civil penalty.

The respondent must pay the fine within 30 days of receipt of the FAO. The respondent may petition the FMCSA for reconsideration of the FAO within 20 days after it is served. If the broker, freight forwarder, or motor carrier has not paid its fine in full, or if it has not executed an agreement with the appropriate FMCSA Service Center for a payment schedule for its fine, the agency issues an accounts receivable memorandum to the FHWA Finance Division which will pursue collection through administrative channels. (The FHWA is providing certain administrative support for the FMCSA under an interagency agreement until the FMCSA is authorized to fully staff its administrative offices.) If the agency has not received payment 30 days after the FAO is served on a broker, freight forwarder, or motor carrier, the FHWA will send a letter to the broker, freight forwarder, or motor carrier by certified mail, return receipt requested. The FHWA sends additional letters if it has still not received payment by 60 days and 90 days after service of the order. After 180 days, the FHWA refers the case to the Department of Treasury for collection of the fine in accordance with the Debt Collection Improvement Act of 1996, Pub. L. 104–134, 110 Stat. 1321–358.

Under this final rule implementing section 206, the owner or operator of a commercial motor vehicle that fails to pay its fine (or, if the agency agreed to accept installment payments, part of its fine) within 90 days of the date specified for payment will be barred from operating in interstate commerce on the 91st day and may not resume operating until it has paid the entire fine in full. In addition, the registration of a broker, freight forwarder, or for-hire motor carrier that fails to pay fines (or, in case of installment payments, part of a fine) within 90 days of the date specified for payment will be suspended, after notice and opportunity for a proceeding, on the 91st day. The respondent may not operate in interstate commerce until the entire fine has been paid in full and its registration restored.

## Docket Comments to the NPRM

The agency received comments from: the American Trucking Associations (ATA), the National Private Truck Council (NPTC), Advocates for Highway and Auto Safety (AHAS), Larry R. Davidson on behalf of the National Association of Transportation Safety Professionals (NATSP), the Transportation Lawyers Association (TLA), the National Association of Small Trucking Companies (NASTC), and Mr. Robert M. Hunziker, an individual.

### *Definitions and Delegation*

The ATA asks the FMCSA to revise the definition of Assistant Administrator to state that ''* * * the decision of the Assistant Administrator * * * shall be administratively final.'' The NPRM had stated ''the Assistant Administrator is * * * the final agency decisionmaker * * *'' The ATA reasons that ''finality in proceedings should refer to the finality of the decision—not the finality of the decisionmaker.'' The ATA further points to the citation in the statute that delegates powers to the Administrator, 49 U.S.C. 113(h), uses the term ''administratively final.''

The ATA also requests the FMCSA to use the term ''owner or operator of a commercial motor vehicle'' rather than ''motor carrier'' in § 386.83. The ATA commented that 49 U.S.C. 521(b)(8) does not use the term ''motor carrier'' and asserted that the meaning of the term in that law is different from the

meaning under 49 U.S.C. 13102(12) and (13) and 49 U.S.C. 31501.

*Agency's Response*

The FMCSA believes that both of ATA's comments have merit. The agency has, therefore, changed the definition of ''Assistant Administrator'' in the manner suggested by ATA, and amended § 386.83 to refer to ''a CMV owner or operator.''

The agency addressed the use of the terms ''motor carrier'' and ''owner or operator'' in the NPRM concerning safety fitness procedures (64 FR 44460, at 44462, August 16, 1999). Although the FMCSRs have long treated owners and operators of CMVs as ''motor carriers'' (see 49 CFR 390.5), section 206(b) is clear. It applies specifically to ''the owner or operator of a commercial motor vehicle against whom a civil penalty is assessed * * *'' [49 U.S.C. 521(b)(8)]. The Congress could have used the term ''motor carrier'' as it did in section 521(b)(2)(B), but obviously decided not to do so in the MCSIA. In the interest of clarity, the FMCSA has therefore replaced the term ''motor carrier'' with a slight variant of the statutory language.

*Notice of Claim*

The TLA and the NASTC submitted similar comments. Both organizations contend that the FMCSA's procedures concerning the transformation of a Notice of Claim into a Final Agency Order in case of a failure to comply with the requirements for a response, constitute rulemaking without notice-and-comment. In the words of the NASTC, ''The FMCSA fails to describe the manner in which a Notice of Claim defaults into a Final Agency Order, even when a motor carrier timely contests the alleged infractions.'' The NASTC contends that ''FMCSA utilizes this procedure, particularly in situations where a motor carrier has no legal representation, which is the situation in which most NASTC members find themselves.'' The TLA asserts that the preamble to the September 19, 2000 NPRM ''provided an incomplete presentation of how the new penalties fit within the existing procedures.''

A motor carrier or other regulated entity that contests a Notice of Claim must provide a response in writing that complies with 49 CFR 386.14(b). Section 386.14(b)(1) requires ''[a]n admission or denial of each allegation of the claim or notice and a concise statement of facts constituting each defense.'' Section 386.14(b)(3) requires ''[a] statement of whether the respondent wishes to negotiate the terms of payment or settlement of the amount claimed, or the terms and conditions of the order.'' These requirements have been in the FMCSRs since 1985 (50 FR 40306, October 2, 1985). Section 386.14(e) provides that ''[i]f the respondent does not reply to a Claim Letter within the time prescribed in this section, the Claim letter becomes the final agency order in the proceeding 25 days after it is served.''

The TLA and NASTC cited the same administrative cases in support of their views (*In the Matter of Robert D. Bennet,* Docket No. FHWA–98–4779 (December 10, 1998) and *In the Matter of Bergerson-Caswell, Inc.,* Docket No. OMCS–99–6497 (November 29, 1999)). In *Bennett,* the Associate Administrator for Motor Carriers said that ''the Regional Director [a position since eliminated] or Resource Center Operations Manager may issue to the respondent a declaration that the Notice of Claim has become the final agency order pursuant to 49 CFR 386.14(e) because a 'reply,' in accordance with 49 CFR 386.14(b), had not been submitted'' (p. 3). The TLA asserts that ''the existing regulations contain no indication that a Field Administrator is empowered to determine the carrier's timely NOC response is legally insufficient.''

*Agency's Response*

The NPRM summarized the penalty procedures in part 386 as an aid to readers who might not be familiar with them. The summary was not meant to be a complete statement of the agency's procedures. The comments submitted by the TLA and NASTC amount to collateral attacks on the *Bennett* and *Bergerson-Caswell* decisions and are thus beyond the scope of this rulemaking. A brief discussion of those cases may be useful, however. *Bennett* requires the Resource Center Operations Manager, when issuing a declaration of default, to ''include a notice that the respondent has an opportunity to petition the Associate Administrator [now Chief Safety Officer] for review of the declaration. If no petition is submitted, the Notice of Claim is both the final order and the final agency order'' (p. 3). *Bennett* therefore gives the respondent actual notice of the default and an opportunity to contest the declaration of default. Under the Administrative Procedure Act (APA), notice and comment rulemaking is not required if a person subject to a rule has been personally served or otherwise has actual notice of the rule (49 U.S.C. 553(b)). Furthermore, the opportunity to contest a default created by *Bennett* and reaffirmed by *Bergerson-Caswell* is not specifically provided for in Part 386. These two cases therefore enhanced the rights of respondents, and did so in a manner entirely consistent with the APA.

*Notice and Opportunity for Proceeding*

The ATA and the NATSP expressed concern that § 386.84 of the NPRM does not provide for prior notice and opportunity for a proceeding before the suspension or revocation of registration, as required by section 206. The NATSP also believes that the agency should give similar procedural rights under § 386.83, although that is not required by statute.

*Agency's Response*

The proposal in the NPRM to give respondents written notice 45 days after the date a penalty was due (§§ 386.83(b) and 386.84(b)), was intended to meet the statutory requirement for ''notice and an opportunity for a proceeding'' (49 U.S.C. 13905(c)(1)) and to extend that right to a driver and private motor carrier as well. The FMCSA has amended the sections in question to make those rights more explicit. In order to comply with section 206, however, the show cause proceeding included in the final rule is necessarily limited in nature. A respondent's operations in interstate commerce will be prohibited, or its registration suspended, on the 91st day after payment was due unless it can show that it has paid in full or filed for bankruptcy under chapter 11. There are no other defenses.

*Protest Procedure*

Mr. Hunziker believes it would not be appropriate to prohibit a motor carrier from operating if the motor carrier was protesting or appealing the assessment of a civil penalty.

*Agency's Response*

The FMCSA's rules of practice provide a motor carrier several opportunities to contest the agency's findings in enforcement actions. These are described in 49 CFR part 386 and were summarized in the NPRM (65 FR 56521, at 56523–4). Section 206 does not give the agency discretion to hold the statutory penalties in abeyance when the respondent is more than 90 days overdue in making payment, even if a legal challenge has been filed. That principle is stated in §§ 386.83(b)(3) and 386.84(b)(3). Both the NPRM and the final rule, however, recognize that a Federal Circuit Court of Appeals might issue a stay.

*Effective Presentation of Warning Text*

AHAS and the ATA recommend that the FMCSA's letters to motor carriers

whose payments are delinquent contain language presented in a format and typeface that emphasizes the requirement for the motor carrier to cease its operations in interstate commerce if it does not pay its fine by the specified date. The ATA offered specific language for a ''Legal Warning.''

*Agency's Response*

The FMCSA will revise the text and format of the letters it sends to motor carriers to emphasize this requirement.

*Enforcement of Cease-Operations Sanction*

Citing the discussion of current fine-collection procedures in the NPRM, AHAS noted that because section 206 imposes more serious penalties than previous law—prohibition on operation or suspension of registration—the FMCSA should ''put forward a plan to enforce this sanction and the law on a much more aggressive time schedule than for mere collection of unpaid fines.''

*Agency's Response*

The FMCSA is developing procedures to vigorously enforce the cessation-of-operations provisions of the statute and implementing regulations. The procedures will include methods to provide rapid and effective notification to FMCSA field staff and State motor carrier safety and vehicle licensing agencies.

*Economic Impacts*

AHAS agrees with the FMCSA's determination that this rulemaking would have minimal economic impact on the motor carrier industry. No other commenters addressed this aspect of the NPRM.

*Penalty Assessment Process*

The NATSP charged that the agency's method of determining penalties creates a ''due process problem.'' The NASTP apparently believes the FMCSA should negotiate an ''appropriate penalty'' with a motor carrier (or other respondent) before issuing a Notice of Claim. In addition to not involving a motor carrier directly ''in the determination of the amount of the penalty,'' the FMCSA refuses to allow independent evaluation of its method of applying the statutory factors for setting penalties. The NATSP believes that the FMCSA imposes fines at arbitrary levels that are impossible for a small or medium-sized motor carrier to pay, and that these firms would thus be forced out of business. The NATSP suggests ''referring penalty assessment to an independent Administrative Law Judge, or to the Department of Treasury, or the Department of Justice.''

*Agency's Response*

These comments are outside the scope of this rulemaking. In preparing a Notice of Claim, the FMCSA does not consult with a motor carrier about the proper amount of the penalty, nor should it. The responsibility of choosing penalties that will induce future compliance with the FMCSRs rests with the agency alone. If the respondent believes the penalty assessed is too high, it can try to negotiate a lower amount with the agency's enforcement staff. Alternatively, it could file a motion for reduction with the Chief Safety Officer. That official may or may not agree to lower the penalty originally assessed; both courses of action are reflected in proceedings decided over the past decade. The final outcome will depend on the facts of the particular case.

The Justice or Treasury Departments cannot decide what penalties should be assessed against motor carriers in Notices of Claim; Congress has assigned that authority exclusively to the Department of Transportation. An Administrative Law Judge (ALJ), though certainly unbiased, is not independent of the FMCSA. ALJs hear cases at the request of the Chief Safety Officer, and their initial findings may be overruled by that Officer. The FMCSA's enforcement proceedings comply with all legal and constitutional requirements.

Even on the purely factual level, the NATSP's comments are incorrect. There is no evidence that any substantial number of motor carriers has been forced out of business as a result of paying fines levied by this agency.

*General Comments*

The NPTC stated that it supported the NPRM provisions. It cautioned the agency to use its enforcement authority wisely and to ensure that fines and other penalties were set at levels appropriate to the nature of the violations found.

The AHAS also support the NPRM and believe that the new regulations should provide a ''powerful deterrent'' to improve safety.

*Agency's Response*

The FMCSA and its predecessor agencies did not have the authority to suspend or revoke operating authority solely on the basis of non-payment of fines. Section 206 of the MCSIA provided that authority for the first time.

**Discussion of Final Rule**

The revisions to 49 CFR part 386 are a straightforward implementation of the amendments to 49 U.S.C. 521(b) and 49 U.S.C. 13905(c) made by section 206 of the MCSIA. The regulatory language published in the NPRM is being adopted today with only a few changes.

*Terms of Prohibition*

A CMV owner or operator that fails to pay a civil penalty in full within 90 days after the date specified in the FMCSA's FAO must cease operating CMVs in interstate commerce starting the next day (that is, on day 91). The CMV owner or operator will not be allowed to operate in interstate commerce until the FMCSA has received full payment of the penalty.

If the CMV owner or operator fails to make an installment payment on schedule, the payment plan is void and the entire debt is payable immediately. A CMV owner or operator that fails to pay the full outstanding balance of its civil penalty within 90 days after the date of the missed installment payment, is prohibited from operating in interstate commerce on the next (*i.e.,* the 91st) day. The CMV owner or operator will not be allowed to operate in interstate commerce until the FMCSA has received full payment of the entire penalty.

The rule will apply prospectively. It will only apply to FAOs issued on or after the effective date of the final rule. FAOs issued before that date are not subject to the provisions of the rule.

The rule does not apply to a broker, freight forwarder, CMV owner and operator, or other person who is unable to pay because the person is a debtor in a case under chapter 11, title 11, United States Code.

If the FMCSA has not received payment 45 days after service of the FAO, the agency will send the broker, freight forwarder, or CMV owner or operator a notice by certified mail, return receipt requested. This notice provides the motor carrier, broker, or freight forwarder one additional notice and an opportunity to show cause why its operations in interstate commerce should not be forbidden, or its registration suspended, on the 91st day after service of the FAO. If the broker, freight forwarder, or motor carrier can prove that the FMCSA has received timely payment in full, or that it has filed bankruptcy proceedings under chapter 11 of the Bankruptcy Code, it must notify the FMCSA immediately, and the prohibition or suspension will be reversed.

The FMCSA will be taking necessary actions on the 91st day to notify its State

partner agencies that a particular broker, freight forwarder, or motor carrier is forbidden to operate in interstate commerce. Immediately notifying FMCSA that full payment or a bankruptcy filing has been made will prevent a motor carrier's CMVs from being needlessly detained at ports of entry and weigh stations.

*Effective Date of Final Rule*

The effective date of this final rule is April 16, 2001, or 120 days from today. First, the new consequences of non-payment of a penalty are severe. The FMCSA wants to provide sufficient time for motor carriers to become aware of this new rule. Second, the agency requires the additional time to make necessary changes to its information systems and correspondence procedures so the communications between the agency and brokers, freight forwarders, and motor carriers are handled in a timely and efficient manner.

*Technical Amendment Modifying Title of Part 386*

The FMCSA is modifying the title of Part 386 to show that brokers, freight forwarders, and hazardous material transportation are also subject to these proceedings.

**Rulemaking Analyses And Notices**

*Executive Order 12866 (Regulatory Planning and Review) and DOT Regulatory Policies and Procedures*

The FMCSA has determined that this regulatory action is not significant within the meaning of Executive Order 12866 nor under the regulatory policies and procedures of the DOT (44 FR 11034, February 26, 1979). This rule will prohibit any broker, freight forwarder, or motor carrier or driver in interstate commerce that has not paid a penalty assessed by the FMCSA within 90 days of the final agency order, or has not abided by a payment plan that it had arranged with the FMCSA, from operating in interstate commerce.

Based upon the data presented in the NPRM, the FMCSA anticipates that this rulemaking will have minimal economic impact on the interstate motor carrier industry. Statistics on enforcement actions taken during each of Federal fiscal years 1996 through 1999 indicate that approximately 300 to 500 motor carriers per year did not pay their assessed penalties within 90 days after receiving a final agency order. Under this regulation, these motor carriers will be required to cease their operations in interstate commerce until they have paid their penalties. That sanction may induce most such motor carriers to pay the civil penalty within 90 days or to abide by their agreed-upon payment plans. It is assumed that the costs of paying the fines, which have historically averaged between $3,500 and $5,500, would be less than the potential significantly higher cost of not paying, and facing the shutdown of interstate operations. Thus, the entities involved would take steps to achieve compliance with the lower cost alternative. For the purpose of this analysis, the FMCSA estimates that between 50 and 75 percent of these motor carriers would pay their fines within 90 days rather than face additional sanctions. Therefore, approximately 75 to 250 motor carriers annually might not pay their assessed fines and would face the penalties attached to this rule. This estimate is conservative because it does not account for those motor carriers in chapter 11 bankruptcy proceedings that are not subject to this rule.

Based upon its analysis of statistical information concerning motor carriers' improvement in their safety ratings, the FMCSA believes that the vast majority of motor carriers interested in continuing their operations would be able to do so. The adverse impact of this rule on those few motor carriers not involved in bankruptcy proceedings which fail to pay their penalties in a timely manner, is exactly the effect intended by Congress.

This rule will only affect the operations of the small number of motor carriers that do not pay civil penalties assessed as part of enforcement actions. The number of motor carriers involved is expected to continue to be extremely small—fewer than one-tenth of one percent of motor carriers per year listed as active in the MCMIS. The FMCSA believes the number of motor carriers potentially subject to this level of impact is much smaller than the number of motor carriers that cease operations every year as a result of normal economic fluctuations. This rulemaking reinforces the importance of complying with the safety regulations by putting into place a mechanism to require motor carriers to pay penalties assessed, unless they are unable to pay because they are debtors in chapter 11 bankruptcy proceedings.

This rule imposes no new costs upon motor carriers, brokers, and freight forwarders. Those entities should see no change to their operations, provided they pay assessed monetary penalties within the time frames that they arrange with the FMCSA. Based upon the extremely small number of motor carriers projected to be affected, the agency believes that the overall adverse economic effects of this rulemaking will be minimal. This rule will allow the FMCSA to require those very few motor carriers that do not pay civil penalties, or abide by payment agreements, to cease their operations in interstate commerce. A broker, freight forwarder, or for-hire motor carrier operating in interstate commerce may also lose its operating authority until it pays its overdue civil penalties. This rule provides the FMCSA with an essential tool to take prompt and effective action against these motor carriers.

*Regulatory Flexibility Act*

In compliance with the Regulatory Flexibility Act (5 U.S.C. 601–612) the FMCSA has evaluated the effects of this rulemaking on small entities. The only motor carriers economically impacted by this rule will be those who do not pay their civil penalties by the 90th day after the FMCSA's final agency order or that have failed to arrange and abide by a payment plan.

Motor carriers can avoid the consequences of this rule simply by paying their civil penalties. The FMCSA does not assess fines at a level that would cause a motor carrier to shortchange its safety and soundness of operations in order to pay its fine. In determining the level of penalties, the FMCSA takes into account, among other things, a motor carrier's ability to pay. The FMCSA also allows motor carriers to arrange a payment plan with the agency. Both of these considerations are tailored to the financial needs of small motor carriers and are part of the agency's current procedures. Therefore, the FMCSA hereby certifies that this regulatory action will not have a significant economic impact on a substantial number of small entities.

*Unfunded Mandates Reform Act of 1995*

This rule does not impose a Federal mandate resulting in the expenditure by State, local, or tribal governments, in the aggregate, or by the private sector, of $100 million or more in any one year (2 U.S.C 1531 *et seq.*).

*Executive Order 12988 (Civil Justice Reform)*

This action meets applicable standards in sections 3(a) and 3(b)(2) of Executive Order 12988, Civil Justice Reform, to minimize litigation, eliminate ambiguity, and reduce burden.

*Executive Order 13045 (Protection of Children)*

We have analyzed this action under Executive Order 13045, ''Protection of Children from Environmental Health

Risks and Safety Risks.'' This rule is not economically significant and does not concern an environmental risk to health or safety that would disproportionately affect children.

*Executive Order 12630 (Taking of Private Property)*

This rule implements a statutory mandate to prohibit motor carriers that do not pay assessed penalties from operating in interstate commerce. Motor carriers can avoid all of the implications of this mandate by complying with the FMCSRs, thereby avoiding adverse enforcement actions. Failing that, the motor carrier can avoid the new sanctions under this rule by paying penalties assessed within 90 days of the final agency order. If the motor carrier has arranged a payment plan with the FMCSA, it can avoid the new sanctions by abiding by its payment plan. The FMCSA therefore certifies that this rule has no takings implications under the Fifth Amendment or Executive Order 12630, Governmental Actions and Interference with Constitutionally Protected Property Rights.

*Executive Order 13132 (Federalism)*

This action has been analyzed in accordance with the principles and criteria contained in Executive Order 13132, dated August 4, 1999. The FMCSA has determined this rule does not have a substantial direct effect on, or sufficient federalism implications for, the States, nor will it limit the policymaking discretion of the States.

Nothing in this document directly preempts any State law or regulation. It will not impose additional costs or burdens on the States. Although the FMCSA is revising part 386 of the FMCSRs, States are not required to adopt part 386 as a condition for receiving Motor Carrier Safety Assistance Program grants. Also, this action will not have a significant effect on the States' ability to execute traditional State governmental functions.

*Executive Order 12372 (Intergovernmental Review)*

Catalog of Domestic Assistance Program Number 20.217, Motor Carrier Safety. The regulations implementing Executive Order 12372 regarding intergovernmental consultation on Federal programs and activities do not apply to this program.

*Paperwork Reduction Act*

This action does not involve an information collection that is subject to the requirements of the Paperwork Reduction Act of 1995, 44 U.S.C. 3501–3520.

*National Environmental Policy Act*

The agency has analyzed this action for the purpose of the National Environmental Policy Act of 1969 (42 U.S.C. 4321 *et seq.*) and has determined under DOT Order 5610.1C (September 18, 1979) that this action does not require any environmental assessment.

**List of Subjects**

*49 CFR Part 385*

Highway safety, Motor carriers.

*49 CFR Part 386*

Highway safety, Motor carriers, Rules of practice.

In consideration of the foregoing, the FMCSA amends title 49, Code of Federal Regulations, Chapter III, parts 385 and 386 as set forth below:

## PART 385—SAFETY FITNESS PROCEDURES

1. Revise the authority citation for part 385 to read as follows:

**Authority:** 49 U.S.C. 113, 504, 521(b)(5)(A) and (b)(8), 5113, 31136, 31144, 31502; and 49 CFR 1.73.

2. Add § 385.14 to read as follows:

### § 385.14 Motor carriers, brokers, and freight forwarders delinquent in paying civil penalties: prohibition on transportation.

(a) A CMV owner or operator that has failed to pay civil penalties imposed by the FMCSA, or has failed to abide by a payment plan, may be prohibited from operating CMVs in interstate commerce under 49 CFR 386.83.

(b) A broker, freight forwarder, or for-hire motor carrier that has failed to pay civil penalties imposed by the FMCSA, or has failed to abide by a payment plan, may be prohibited from operating in interstate commerce, and its registration may be suspended under the provisions of 49 CFR 386.84.

## PART 386—RULES OF PRACTICE FOR MOTOR CARRIER, BROKER, FREIGHT FORWARDER, AND HAZARDOUS MATERIALS PROCEEDINGS

3. Revise the authority citation for part 386 to read as follows:

**Authority:** 49 U.S.C. 113, chapters 5, 51, 59, 131–141, 145–149, 311, 313, and 315; sec. 206, Pub. L. 106–159, 113 Stat. 1763; and 49 CFR 1.45 and 1.73.

4. Revise the heading of part 386 to read as set forth above.

5. Revise § 386.1 to read as follows:

### § 386.1 Scope of rules in this part.

The rules in this part govern proceedings before the Assistant Administrator, who also acts as the Chief Safety Officer of the Federal Motor Carrier Safety Administration (FMCSA), under applicable provisions of the Federal Motor Carrier Safety Regulations (49 CFR parts 350–399), including the commercial regulations (49 CFR parts 360–379) and the Hazardous Materials Regulations (49 CFR parts 171–180). The purpose of the proceedings is to enable the Assistant Administrator to determine whether a motor carrier, property broker, freight forwarder, or its agents, employees, or any other person subject to the jurisdiction of the FMCSA, has failed to comply with the provisions or requirements of applicable statutes and the corresponding regulations and, if such violations are found, to issue an appropriate order to compel compliance with the statute or regulation, assess a civil penalty, or both.

6. In § 386.2, remove ''Federal Highway Administration'' and add ''Federal Motor Carrier Safety Administration'' each place it appears; and add the new definitions of *Assistant Administrator, Broker, Final agency order,* and *Freight forwarder,* in alphabetical order, to read as follows:

### § 386.2 Definitions.

* * * * *

*Assistant Administrator* means the Assistant Administrator of the Federal Motor Carrier Safety Administration. The Assistant Administrator is the Chief Safety Officer of the agency pursuant to 49 U.S.C. 113(d). Decisions of the Assistant Administrator in motor carrier, broker, freight forwarder, and hazardous materials proceedings under this part are administratively final.

* * * * *

*Broker* means a person who, for compensation, arranges or offers to arrange the transportation of property by an authorized motor carrier. A motor carrier, or person who is an employee or bona fide agent of a carrier, is not a broker within the meaning of this section when it arranges or offers to arrange the transportation of shipments which it is authorized to transport and which it has accepted and legally bound itself to transport.

* * * * *

*Final agency order* means a notice of final agency action issued pursuant to this part by either the appropriate FMCSA Field Administrator (for default judgements under § 386.14(e)), the FMCSA Chief Safety Officer, or an Administrative Law Judge (ALJ),

typically requiring payment of a civil penalty by a broker, freight forwarder, driver, or motor carrier.

*Freight forwarder* means a person holding itself out to the general public (other than as an express, pipeline, rail, sleeping car, motor, or water carrier) to provide transportation of property for compensation in interstate commerce, and in the ordinary course of its business:

(1) Performs or provides for assembling, consolidating, break-bulk, and distribution of shipments;

(2) Assumes responsibility for transportation from place of receipt to destination; and

(3) Uses for any part of the transportation a carrier subject to FMCSA jurisdiction.

* * * * *

7. Add §§ 386.83 and 386.84 to read as follows:

**§ 386.83 Sanction for failure to pay civil penalties or abide by payment plan; operation in interstate commerce prohibited.**

(a)(1) *General rule.* A CMV owner or operator that fails to pay a civil penalty in full within 90 days after the date specified for payment by the FMCSA's final agency order is prohibited from operating in interstate commerce starting on the next (*i.e.,* the 91st) day. The prohibition continues until the FMCSA has received full payment of the penalty.

(2) *Civil penalties paid in installments.* The FMCSA Service Center may allow a CMV owner or operator to pay a civil penalty in installments. If the CMV owner or operator fails to make an installment payment on schedule, the payment plan is void and the entire debt is payable immediately. A CMV owner or operator that fails to pay the full outstanding balance of its civil penalty within 90 days after the date of the missed installment payment, is prohibited from operating in interstate commerce on the next (*i.e.,* the 91st) day. The prohibition continues until the FMCSA has received full payment of the entire penalty.

(3) *Appeals to Federal Court.* If the CMV owner or operator appeals the final agency order to a Federal Circuit Court of Appeals, the terms and payment due date of the final agency order are not stayed unless the Court so directs.

(b) *Show Cause Proceeding.* (1) The FMCSA will notify a CMV owner or operator in writing if it has not received payment within 45 days after the date specified for payment by the final agency order or the date of a missed installment payment. The notice will include a warning that failure to pay the entire penalty within 90 days after payment was due, will result in the CMV owner or operator being prohibited from operating in interstate commerce.

(2) The notice will order the CMV owner or operator to show cause why it should not be prohibited from operating in interstate commerce on the 91st day after the date specified for payment. The prohibition may be avoided only by submitting to the Chief Safety Officer:

(i) Evidence that the respondent has paid the entire amount due; or

(ii) Evidence that the respondent has filed for bankruptcy under chapter 11, title 11, United States Code. Respondents in bankruptcy must also submit the information required by paragraph (d) of this section.

(3) The notice will be delivered by certified mail or commercial express service. If a CMV owner's or operator's principal place of business is in a foreign country, the notice will be delivered to the CMV owner's or operator's designated agent.

(c) A CMV owner or operator that continues to operate in interstate commerce in violation of this section may be subject to additional sanctions under paragraph IV (h) of appendix A to part 386.

(d) This section does not apply to any person who is unable to pay a civil penalty because the person is a debtor in a case under chapter 11, title 11, United States Code. CMV owners or operators in bankruptcy proceedings under chapter 11 must provide the following information in their response to the FMCSA:

(1) The chapter of the Bankruptcy Code under which the bankruptcy proceeding is filed (*i.e.,* chapter 7 or 11);

(2) The bankruptcy case number;

(3) The court in which the bankruptcy proceeding was filed; and

(4) Any other information requested by the agency to determine a debtor's bankruptcy status.

**§ 386.84 Sanction for failure to pay civil penalties or abide by payment plan; suspension or revocation of registration.**

(a)(1) *General rule.* The registration of a broker, freight forwarder, or for-hire motor carrier that fails to pay a civil penalty in full within 90 days after the date specified for payment by the FMCSA's final agency order, will be suspended starting on the next (*i.e.,* the 91st) day. The suspension continues until the FMCSA has received full payment of the penalty.

(2) *Civil penalties paid in installments.* The FMCSA Service Center may allow a respondent broker, freight forwarder, or for-hire motor carrier to pay a civil penalty in installments. If the respondent fails to make an installment payment on schedule, the payment plan is void and the entire debt is payable immediately. The registration of a respondent that fails to pay the remainder of its civil penalty in full within 90 days after the date of the missed installment payment, is suspended on the next (*i.e.,* the 91st) day. The suspension continues until the FMCSA has received full payment of entire penalty.

(3) *Appeals to Federal Court.* If the respondent broker, freight forwarder, or for-hire motor carrier appeals the final agency order to a Federal Circuit Court of Appeals, the terms and payment due date of the final agency order are not stayed unless the Court so directs.

(b) *Show Cause Proceeding.* (1) The FMCSA will notify a respondent broker, freight forwarder, or for-hire motor carrier in writing if it has not received payment within 45 days after the date specified for payment by the final agency order or the date of a missed installment payment. The notice will include a warning that failure to pay the entire penalty within 90 days after payment was due, will result in the suspension of the respondent's registration.

(2) The notice will order the respondent to show cause why its registration should not be suspended on the 91st day after the date specified for payment. The prohibition may be avoided only by submitting to the Chief Safety Officer:

(i) Evidence that the respondent has paid the entire amount due; or

(ii) Evidence that the respondent has filed for bankruptcy under chapter 11, title 11, United States Code. Respondents in bankruptcy must also submit the information required by paragraph (d) of this section.

(3) The notice will be delivered by certified mail or commercial express service. If a respondent's principal place of business is in a foreign country, it will be delivered to the respondent's designated agent.

(c) The registration of a broker, freight forwarder or for-hire motor carrier that continues to operate in interstate commerce in violation of this section after its registration has been suspended may be revoked after an additional notice and opportunity for a proceeding in accordance with 49 U.S.C. 13905(c). Additional sanctions may be imposed under paragraph IV (h) of appendix A to part 386.

(d) This section does not apply to any person who is unable to pay a civil penalty because the person is a debtor

in a case under chapter 11, title 11, United States Code. Brokers, freight forwarders, or for-hire motor carriers in bankruptcy proceedings under chapter 11 must provide the following information in their response to the FMCSA:

(1) The chapter of the Bankruptcy Code under which the bankruptcy proceeding is filed (*i.e.,* chapter 7 or 11);

(2) The bankruptcy case number;

(3) The court in which the bankruptcy proceeding was filed; and

(4) Any other information requested by the agency to determine a debtor's bankruptcy status.

8. Add paragraph h to part IV of Appendix A to part 386 to read as follows:

**Appendix A to Part 386—Penalty Schedule; Violations of Notices and Orders**

* * * * *

IV. * * *

h. *Violation*—Conducting operations during a period of suspension under §§ 386.83 or 386.84 for failure to pay penalties.

*Penalty*—Up to $10,000 for each day that operations are conducted during the suspension period.

Issued on: December 7, 2000.

**Brian M. McLaughlin,**

*Acting Assistant Administrator.*

[FR Doc. 00–31920 Filed 12–14–00; 8:45 am]

BILLING CODE 4910–EX–P

# Proposed Rules

Federal Register
Vol. 65, No. 242
Friday, December 15, 2000

This section of the FEDERAL REGISTER contains notices to the public of the proposed issuance of rules and regulations. The purpose of these notices is to give interested persons an opportunity to participate in the rule making prior to the adoption of the final rules.

## DEPARTMENT OF THE TREASURY

### Customs Service

### 19 CFR Part 24

**RIN 1515–AC64**

## Time Limitation for Requesting Refunds of Harbor Maintenance Fee and for Making Other Claims Against Customs

**AGENCY:** Customs Service, Department of the Treasury.

**ACTION:** Notice of proposed rulemaking.

**SUMMARY:** This document proposes to amend the Customs Regulations to establish a one year time limit within which a refund request must be filed for overpayments of Harbor Maintenance Fees that were paid quarterly and for making other claims against Customs. This time limit would assure an efficient reasonable final resolution of claims against Customs.

**DATES:** Comments must be received on or before February 13, 2001

**ADDRESSES:** Comments may be submitted to and inspected at the Regulations Branch, Office of Regulations and Rulings, U.S. Customs Service, 1300 Pennsylvania Avenue, NW., Washington, DC 20229.

**FOR FURTHER INFORMATION CONTACT:** Deborah Thompson, Accounts Receivable Branch, Accounting Services Division, (317) 298–1200 ext. 4003.

**SUPPLEMENTARY INFORMATION:**

### Background

The Harbor Maintenance Fee was created by provisions of the Water Resources Development Act of 1986 (26 U.S.C. 4461 *et seq.*) (''the Act''), as amended, and implemented through interim regulations, published in the **Federal Register** as T.D. 87–44 on March 30, 1987 (52 FR 10198). The Act authorizes the Customs Service to assess a harbor maintenance fee for port use at certain ports by commercial vessels which load or unload merchandise or passengers, unless specifically exempted. By assessing a charge for port use, the Act causes those who benefit from the maintenance of a Federal port or harbor to share in the cost of that maintenance.

It is necessary for there to be a time limit within which a refund claim can be submitted to Customs to assure an efficient reasonable final resolution of refund claims.

In a case decided by the United States Court of Appeals for the Federal Circuit on February 28, 2000, *Swisher International, Inc.* v. *United States,* No. 99–1277 (February 28, 2000), the court held that there was ''no generic limitation period on requesting [harbor maintenance fee] refunds'' because Customs did not set a time limit for requesting refunds in the applicable regulations. The court went on to say that ''Customs was free to impose time limits on the filing of [harbor maintenance fee] refund requests * * * and it remains free to alter the regulation to impose a time limit in the future.''

Customs is acting on the court's advice and proposing to amend the Customs Regulations by establishing a one year time limit for the filing of a refund request for quarterly harbor maintenance fee payments. The one year limit for a refund request will commence at the payment date to Customs. The payment date for quarterly harbor maintenance fee payments mailed to Customs at a post office box is the date the payment to the post office box is processed to Customs account. Section 24.24(e)(4) of the Customs Regulations (19 CFR 24.24(e)(4)) is proposed to be amended to add this time limitation.

This proposed one year time limitation is only applicable to requests for refunds for harbor maintenance fees that are paid quarterly. The proposed limitation is not applicable to requests for refunds of harbor maintenance fees that were paid in accordance with the normal Customs collection procedures for imported merchandise set forth in §§ 24.1 and 141.1 (19 CFR 24.1 and 141.1). Section 24.24(e)(2)(ii), Customs Regulations describes those harbor maintenance fees that are paid in accordance with normal duty collection procedures for imported merchandise. If a harbor maintenance fee is paid in accordance with normal duty collection procedures for imported merchandise, a refund may be sought of that fee in accordance with the procedure that is used for seeking a refund of a duty payment. Additionally, requests for refunds of payments made quarterly that are properly filed with Customs prior to this proposed rule becoming final will be processed by Customs regardless of the dates on which payments were made.

*Other Claims*

At this time, for similar reasons of administrative efficiency, Customs is also proposing to set a one year time limitation for the filing of a claim of any nature arising under the Customs laws which is not otherwise provided for in the regulations. This limitation is added to § 24.73 of the Customs Regulations (19 CFR 24.73).

*Technical Correction*

Customs is also amending § 24.24(e)(2)(ii) for a technical error removing the citation to ''(e)(3)(iii)'' and replacing it with ''(e)(2)(iii)''.

### Comments

Before adopting the proposed amendments, consideration will be given to any written comments, including comments on the clarity of the amendments and how they may be made easier to understand, that are timely submitted to Customs. Comments submitted will be available for public inspection in accordance with the Freedom of Information Act (5 U.S.C. 552); § 1.4, Treasury Regulations (31 CFR 1.4); and § 103.11(b), Customs Regulations (19 CFR 103.11(b)), on regular business days between the hours of 9 a.m. and 4:30 p.m. at the Regulations Branch, 1300 Pennsylvania Avenue, NW., Washington, DC 20229.

### Regulatory Flexibility Act

Insofar as the proposed amendments merely establish a filing time limit to existing regulations, pursuant to the provisions of the Regulatory Flexibility Act (5 U.S.C. 601, *et seq.*), it is certified that the amendments, if adopted, will not have a significant economic impact on a substantial number of small entities. Accordingly, the proposed amendments are not subject to the regulatory analysis or other requirements of 5 U.S.C. 603 and 604.

**Executive Order 12866**

The proposed amendments do not meet the criteria for a ''significant regulatory action'' as specified in E.O. 12866.

**Drafting Information**

The principal author of this document was Keith B. Rudich, Regulations Branch, Office of Regulations and Rulings, U.S. Customs Service. However, personnel from other offices participated in its development.

**List of Subjects in 19 CFR Part 24**

Accounting, Canada, Claims, Customs duties and inspection, Fees, Financial and accounting procedures, Harbors, Reporting and recordkeeping requirements, Taxes, User fees.

**Proposed Amendment**

It is proposed to amend part 24, Customs Regulations (19 CFR part 24) as set forth below:

## PART 24—CUSTOMS FINANCIAL AND ACCOUNTING PROCEDURE

1. The general authority citation for part 24 will continue to read as follows:

**Authority:** 5 U.S.C. 301, 19 U.S.C. 58a–58c, 66, 1202 (General Note 20, Harmonized Tariff Schedule of the United States), 1505, 1624; 26 U.S.C. 4461, 4462; 31 U.S.C. 9701.

* * * * *

2. It is proposed to amend § 24.24 by removing in paragraph (e)(2)(ii) the reference to (e)(3)(iii)'' and adding ''(e)(2)(iii)'; and by revising paragraph (e)(4) to read as follows:

**§ 24.24 Harbor Maintenance Fee.**

* * * * *

(e) *Collections.*

* * * * *

(4) *Supplemental payments and refunds.* If a supplemental payment is made for a harbor maintenance fee that was paid quarterly, it must be mailed to the U.S. Customs Service, P.O. Box 70915, Chicago, Illinois 60673–0915. The envelope containing a supplemental payment must also have enclosed both a Harbor Maintenance Fee Amended Quarterly Summary Report, Customs Form 350, and a copy of the Harbor Maintenance Fee Quarterly Summary Report, Customs Form 349, that was submitted at the time the fee for which the supplemental payment is being made was originally paid. Requests for refunds of a quarterly harbor maintenance fee payment, specifying the grounds of the claim along with the required documentation, must be received by Customs within one year from the date the fee for which the refund is sought was paid to Customs; or in the case of merchandise admitted into a foreign trade zone and subsequently withdrawn from the zone for any purpose specified in 19 U.S.C. 1309, within one year from the date of withdrawal from the zone. A request for a refund of a quarterly harbor maintenance fee payment must be submitted to Customs with both a Harbor Maintenance Fee Amended Quarterly Summary Report, Customs Form 350, and a copy of the Harbor Maintenance Fee Quarterly Summary Report, Customs Form 349, that was submitted at the time the fee for which a refund is sought was originally paid. The request for a refund of a quarterly harbor maintenance fee payment must be mailed to the U.S. Customs Service, HMF Refunds, 6026 Lakeside Blvd., Indianapolis, IN 46278.

* * * * *

3. It is proposed to revise § 24.73 to read as follows:

**§ 24.73 Miscellaneous claims.**

Every claim of whatever nature arising under the Customs laws which is not otherwise provided for shall be forwarded directly to Office of Finance, Headquarters, U.S. Customs Service, specifying the grounds of the claim together with all supporting documents and information available. Any claims within this section must be submitted within one year of the act giving rise to the claim.

**Raymond W. Kelly,**

*Commissioner of Customs.*

Approved: December 11, 2000.

**Helen B. Belt,**

*Acting Deputy Assistant Secretary of the Treasury.*

[FR Doc. 00–31969 Filed 12–14–00; 8:45 am]

BILLING CODE 4820–02–P

---

## DEPARTMENT OF THE INTERIOR

## Minerals Management Service

## 30 CFR Part 203

**RIN 1010–AC71**

## Royalty or Reduction in Royalty Rates—Deep Water Royalty Relief for OCS Oil and Gas Leases Issued After 2000

**AGENCY:** Minerals Management Service (MMS), Interior.

**ACTION:** Extension of comment period for proposed rule.

**SUMMARY:** This document extends to January 9, 2001, the deadline for submitting comments on the proposed rule revising regulations on royalty relief for oil and gas producers on the Outer Continental Shelf (OCS). The proposed rule provides for suspension or reduction of royalty on a case-by-case basis for certain additional categories of OCS leases under 30 CFR part 203. Also, it identifies circumstances when we may consider special royalty relief outside our established end-of-life and deep water royalty relief programs.

**DATES:** We will consider all comments received by January 9, 2001, and we may not fully consider comments received after January 9, 2001.

**ADDRESSES:** Mail or hand-carry written comments (three copies) to the Department of the Interior; Minerals Management Service; 381 Elden Street; Mail Stop 4024; Herndon, Virginia 20170–4817; Attention: Rules Processing Team. You may also e-mail your comments to RPT at: *rules.comments@MMS.gov.* Please mark your message for return receipt and identify the rule identification number ''RIN 1010–AC71'' in the subject line of your message. Include your name and return address in your message text.

**FOR FURTHER INFORMATION CONTACT:** Marshall Rose, Economic Division, at (703) 787–1536.

**SUPPLEMENTARY INFORMATION:** MMS was asked to extend the deadline for submitting comments on the proposed regulations revising 30 CFR part 203, Relief or Reduction in Royalty Rates, published on November 16, 2000 (65 FR 69259, with a subsequent correction on November 22, 2000 (65 FR 70386)). The requests indicate a need to wait for the conclusion of two MMS-sponsored workshops the week of December 11, which are designed, in part, to discuss the content and rationale of the proposed rule.

*Public Comments Procedures*

Our practice is to make comments, including names and home addresses of respondents, available for public review during regular business hours. Individual respondents may request that we withhold their home address from the rulemaking record, which we will honor to the extent allowable by law. There may be circumstances in which we would withhold from the rulemaking record a respondent's identity, as allowable by the law. If you wish us to withhold your name and/or address, you must state this prominently at the beginning of your comment. However, we will not consider anonymous comments. We will make all submissions from organizations or businesses, and from individuals identifying themselves as representatives or officials of

organizations or businesses, available for public inspection in their entirety.

Dated: December 11, 2000.

**Carolita U. Kallaur,**

*Associate Director for Offshore Minerals Management.*

[FR Doc. 00–32006 Filed 12–14–00; 8:45 am]

**BILLING CODE 4310–MR–M**

---

## DEPARTMENT OF THE INTERIOR

## Minerals Management Service

## 30 CFR Part 256

**RIN 1010–AC74**

## Leasing of Sulphur or Oil and Gas in the Outer Continental Shelf—Definition of Affected State

**AGENCY:** Minerals Management Service (MMS), Interior.

**ACTION:** Notice of Proposed Rulemaking.

**SUMMARY:** This proposed rule would eliminate the definition of ''Affected State'' from Subpart B, the Oil and Gas Leasing Program. This would mean that the definition of ''Affected State'' in Subpart A would apply and would eliminate the need for unaffected coastal States to participate in the preparation of a 5-year program.

**DATES:** We will consider all comments received by February 13, 2001. We will begin reviewing comments then and may not fully consider comments we receive after February 13, 2001.

**ADDRESSES:** Mail or hand-carry comments to the Department of the Interior; Minerals Management Service; Mail Stop 4024; 381 Elden Street; Herndon, Virginia 20170–4817; Attention: Rules Processing Team.

**FOR FURTHER INFORMATION CONTACT:** Ralph Ainger or Jane Roberts at (703) 787–1215.

**SUPPLEMENTARY INFORMATION:** This proposed rule would eliminate the definition of ''Affected State'' at 30 CFR 256.14 as it applies only to the ''Subpart B, Oil and Gas Leasing Program.'' Because of the Presidential proclamation withdrawing areas of the Outer Continental Shelf (OCS) from leasing consideration, it is virtually impossible for many currently listed States to be affected under the Act. The definition in subpart B is therefore erroneous.

The definition of the term already is found at 30 CFR 256.5(g), which applies to the entire part and follows the definition in the Outer Continental Shelf (OCS) Lands Act, 43 U.S.C. 1331(f). The definition at § 256.5(g) reads as follows: '''Affected State' means, with respect to any program, plan, lease sale, or other activity, proposed, conducted, or approved pursuant to the provisions of the act, any State—

(1) The laws of which are declared, pursuant to section 4(a)(2) of the Act, to be the law of the United States for the portion of the Outer Continental Shelf on which such activity is, or proposed to be conducted;

(2) Which is, or is proposed to be, directly connected by transportation facilities to any artificial island or structure referred to in section 4(a)(1) of the Act;

(3) Which is receiving, or in accordance with the proposed activity will receive, oil for processing, refining, or transshipment which was extracted from the Outer Continental Shelf and transported directly to such State by means of vessels or by a combination of means including vessels;

(4) Which is designated by the Secretary as a State in which there is a substantial probability of significant impact on or damage to the coastal, marine, or human environment, or a State in which there will be significant changes in the social, governmental, or economic infrastructure, resulting from the exploration, development, and production of oil and gas anywhere on the Outer Continental Shelf; or

(5) In which the Secretary finds that because of such activity there is, or will be a significant risk of serious damage, due to factors such as prevailing winds and currents, to the marine or coastal environment in the event of any oilspill, blowout, or release of oil or gas from vessels, pipelines, or other transshipment facilities.''

At this time, listing all the States adjacent to the OCS as ''affected'' is contrary to the intent as well as the letter of the statute and may cause unnecessary administrative burden for those States that are not affected under the legal definition. In June 1998, President Clinton acted under the authority of section 12 of the OCS Lands Act to withdraw the Atlantic and Pacific coasts from leasing until the year 2012.

As a result of Presidential and congressional actions, there can be no leasing off the Atlantic coast until 2012. The other criteria in the statutory definition of affected State relate to post-lease activity. As there are no active leases off the Atlantic coast, it is virtually impossible for any Atlantic States to be affected by the 5-year program. Automatically treating such States as affected requires the Federal Government to involve them in the preparation of the multi-phased 5-year program that would not affect them. In addition, some States have their own administrative processes that come into play if they are deemed affected. These States should not be automatically involved if they do not meet the statutory definition. Because of the Presidential Proclamation, these States cannot be affected under the Act; therefore, the definition in Subpart B is erroneous. However, there is nothing that precludes any State's participation if they wish and to the extent they wish, as the 5-year process contains multiple periods for public comment. Elimination of the definition also reduces the burden on the Government to involve States that are not affected by the program.

### Procedural Matters

*Public Comments Procedure*

Our practice is to make comments, including names and home addresses of respondents, available for public review during regular business hours. Individual respondents may request that we withhold their home address from the rulemaking record, which we will honor to the extent allowable by law. There may be circumstances in which we would withhold from the rulemaking record a respondent's identity, as allowable by law. If you wish us to withhold your name and/or address, you must state this prominently at the beginning of your comment. However, we will not consider anonymous comments. We will make all submissions from organizations or businesses, and from individuals identifying themselves as representatives or officials of organizations or businesses, available for public inspection in their entirety.

*Federalism (Executive Order 13132)*

According to Executive Order 13132, this rule does not have Federalism implications. This rule does not substantially and directly affect the relationship between the Federal and State Governments. Elimination of the redundant and unnecessary definition of an Affected State could reduce costs on States that are not affected by the 5-year program and the cost to the Federal Government of involving unaffected States.

*Takings Implications Assessment (Executive Order 12630)*

According to Executive Order 12630, the rule does not have significant Takings implications. A Takings Implication Assessment is not required. This rule has no effect on Takings, as it only applies to States that would no longer be automatically involved in the

preparation of a program that has no affect on them, thereby eliminating the possible burden of doing so.

*Regulatory Planning and Review (Executive Order 12866)*

This document is not a significant rule and is not subject to review by the Office of Management and Budget (OMB) under Executive Order 12866.

(1) This rule will not have an effect of $100 million or more on the economy. It will not adversely affect in a material way the economy, productivity, competition, jobs, the environment, public health or safety, or State, local, or tribal governments or communities. Ultimately, this rule is advantageous to the Federal Government in that it would not have to involve certain unaffected States in the complex, multi-step process of preparing a 5-year program and to those States that would not have to participate during program preparation, when the Federal Government makes three requests for comments and recommendations from affected States. Because of Presidential withdrawals and congressional moratoria, an average of 14 of the 23 coastal States could be deemed unaffected by a proposed 5-year program. If those 14 States were deemed unaffected, there could be a maximum savings of $170,100 ($2,100 + $168,000). At a minimum, a State must spend 1 hour deciding whether or not to respond. Therefore, there would be a minimum expenditure of $2,100 (14 States × 3 requests × 1 hour × $ 50 per hour). If a State decides, or in some cases is required to, participate by its own laws, that State could spend up to 80 hours preparing each response, for a maximum expenditure of $168,000 (14 States × 3 requests × 80 hours × $50 per hour).

(2) This will not create a serious inconsistency or otherwise interfere with an action taken or planned by another agency. There are no other Federal agencies involved in this process as it relates to participation by coastal States.

(3) This rule does not alter the budgetary effects or entitlements, grants, user fees, or loan programs or rights or obligations of their recipients. This rule has no effect on these programs or such rights.

(4) This rule does not raise novel legal or policy issues. As previously stated, the intent of this rule is to eliminate the redundant and unnecessary definition of Affected State at 30 CFR 256.14. The term already is defined at 30 CFR 256.5(g) and applies to the entire part.

*Civil Justice Reform (Executive Order 12899)*

According to Executive Order 12988, the Office of the Solicitor has determined that this rule does not unduly burden the judicial system and meets the requirements of sections 3(a) and 3(b)(2) or the Order.

*National Environment Policy Act (NEPA)*

We have analyzed this rule according to the criteria of the NEPA and 516 DM. This rule does not constitute a major Federal action significantly affecting the quality of the human environment. An environmental assessment is not required. This rule will have no impact regarding the criteria of the NEPA.

*Paperwork Reduction Act (PRA) of 1995*

This regulation does not affect an existing OMB-approved information collection and an OMB Form 83–I is not required. The proposed rule simply removes a definition. OMB approved the information collection requirements in part 256 under OMB control number 1010–0006, with an expiration date of March 31, 2001.

*Regulatory Flexibility (RF) Act*

The Department certifies that this document will not have a significant economic effect on a substantial number of small entities under the RF Act (5 U.S.C. 601 *et seq.*). This revised rule would eliminate the redundant and unnecessary definition of Affected State at 30 CFR 256.14. The only entities impacted by this rule change are certain coastal States that we would no longer automatically involve in a complex, multi-step process of preparing a 5-year program that would not affect them.

Your comments are important. The Small Business and Agriculture Regulatory Enforcement Ombudsman and 10 Regional Fairness Boards were established to receive comments from small businesses about Federal agency enforcement actions. The Ombudsman will annually evaluate the enforcement activities and rate each agency's responsiveness to small business. If you wish to comment on the enforcement actions of MMS, call toll-free (888) 734–3247.

*Small Business Regulatory Enforcement Fairness Act (SBREFA)*

This rule is not a major rule under the SBREFA, 5 U.S.C. 804(2). This rule:

(1) Does not have an annual effect on the economy of $100 million or more. This rule would eliminate the need for the Federal Government to automatically involve some coastal States in a complex, multi-step process to prepare a program that would not affect them.

(2) Will not cause a major increase in costs or prices for consumers, individual industries, Federal, State, or local government agencies, or geographic areas. This rule would eliminate the need for some coastal States that would not be affected by a 5-year oil and gas program from participating in its preparation unless they chose to do so.

(3) Does not have significant adverse effects on competition, employment, investment, productivity, innovation, ability of United States-based enterprises to compete with foreign-based enterprises. There are no United States- or foreign-based enterprises involved in this rule.

*Unfunded Mandate Reform Act (UMRA) of 1995*

This rule does not impose an unfunded mandate on State, local, or tribal governments or the private sector of more than $100 million per year. This rule does not create any kind of a mandate for State, local, or tribal governments or the private sector. In fact, it eliminates the need for the Federal Government to involve certain States in the preparation of a program that will not affect them. A statement containing the information required by the UMRA, 2 U.S.C. 1501 *et seq.* is not required.

**List of Subjects in 30 CFR Part 256**

Administrative practice and procedure, Continental shelf, Environmental protection, Government contracts, Intergovernmental relations, Minerals Management Service, Oil and gas exploration, Public lands-mineral resources; Public lands-rights-of-way, Reporting and recordkeeping requirements, Surety bonds.

Dated: October 19, 2000.

**Sylvia V. Baca,**

*Assistant Secretary, Land and Minerals Management.*

For the reasons stated in the preamble, MMS proposes to amend 30 CFR part 256 as follows:

## PART 256—LEASING OF SULPHUR OR OIL AND GAS IN THE OUTER CONTINENTAL SHELF

1. The authority citation for Part 256 continues to read as follows:

**Authority:** 42 U.S.C 6213, 43 U.S.C. 1331 *et seq.*

**§ 256.14 [Removed]**

2. Section 256.14 is removed.

[FR Doc. 00–31950 Filed 12–14–00; 8:45 am]

BILLING CODE 4310–MR–P

## LIBRARY OF CONGRESS

## Copyright Office

## 37 CFR Part 201

**[Docket No. RM 2000–4C]**

## Public Performance of Sound Recordings: Definition of a Service

**AGENCY:** Copyright Office, Library of Congress.

**ACTION:** Petition for rulemaking, denial; correction.

**SUMMARY:** This document corrects a footnote to a proposed rule document published in the **Federal Register** of December 11, 2000, regarding the public performance of sound recordings: definition of a service.

**FOR FURTHER INFORMATION CONTACT:** David O. Carson, General Counsel, or Tanya M. Sandros, Senior Attorney, Copyright Arbitration Royalty Panel, P.O. Box 70977, Southwest Station, Washington, D.C. 20024. Telephone: (202) 707–8380. Telefax: (202) 252–3423.

### Correction

In proposed rule document 00–31458 beginning on page 77330 in the issue of December 11, 2000, make the following correction, in the **SUPPLEMENTARY INFORMATION** section:

On page 77332, in the third column, in footnote 1, the last sentence which reads, ''From these descriptions, there is considerable doubt whether either offering would qualify as an 'interactive service.' '' is corrected to read as follows: ''From these descriptions, there is considerable doubt whether either offering would qualify as a noninteractive service.''

Dated: December 12, 2000.

**David O. Carson,**

*General Counsel.*

[FR Doc. 00–32038 Filed 12–14–00; 8:45 am]

BILLING CODE 1410–31–P

## ENVIRONMENTAL PROTECTION AGENCY

## 40 CFR Part 52

**[CA 242–0257; FRL–6917–6]**

## Revisions to the California State Implementation Plan, Imperial County Air Pollution Control District, Monterey Bay Unified Air Pollution Control District, San Joaquin Valley Unified Air Pollution Control District, and South Coast Air Quality Management District

**AGENCY:** Environmental Protection Agency (EPA).

**ACTION:** Proposed rule.

**SUMMARY:** We are proposing a limited approval and limited disapproval of revisions to the Imperial County Air Pollution Control District (ICAPCD) portion, Monterey Bay Unified Air Pollution Control District (MBUAPCD) portion, and the San Joaquin Valley Unified Air Pollution Control District (SJVUAPCD) portion of the California SIP concerning PM–10 emissions from livestock feed lots, agricultural burning, industrial processes, and residential wood burning.

We are also proposing full approval of revisions to the ICAPCD portion of the California SIP concerning definitions, PM–10 emissions from orchard heaters, incinerators, open burning, and range improvement burning, and to the South Coast Air Quality Management District (SCAQMD) portion of the California SIP concerning PM–10 emissions from restaurant operations.

We are also proposing full approval of rescissions from the MBUAPCD portion of the California SIP concerning exceptions to other rules.

We are proposing action on local rules that regulate these emission sources under the Clean Air Act as amended in 1990 (CAA or the Act). We are taking comments on this proposal and plan to follow with a final action.

**DATES:** Any comments must arrive by January 16, 2001.

**ADDRESSES:** Mail comments to Andrew Steckel, Rulemaking Office Chief (AIR–4), Air Division, U.S. Environmental Protection Agency, Region IX, 75 Hawthorne Street, San Francisco, CA 94105.

You can inspect copies of the submitted rule revisions and EPA's technical support documents (TSDs) at our Region IX office during normal business hours. You may also see copies of the submitted rule revisions at the following locations:

Environmental Protection Agency, Air Docket (6102), Ariel Rios Building, 1200 Pennsylvania Avenue, N.W., Washington D.C. 20460.

California Air Resources Board, Stationary Source Division, Rule Evaluation Section, 1001 ''I'' Street, Sacramento, CA 95814.

Imperial County Air Pollution Control District, 150 South Ninth Street, El Centro, CA 92243.

Monterey Bay Unified Air Pollution Control District, 24580 Silver Cloud Court, Monterey, CA 93940.

San Joaquin Valley Unified Air Pollution Control District, 1990 East Gettysburg Street, Fresno, CA 93726.

South Coast Air Quality Management District, 21865 East Copley Drive, Diamond Bar, CA 91765.

**FOR FURTHER INFORMATION CONTACT:** Al Petersen, Rulemaking Office (AIR–4), Air Division, U.S. Environmental Protection Agency, Region IX, 75 Hawthorne Street, San Francisco, CA 94105, (415) 744–1135.

**SUPPLEMENTARY INFORMATION:** Throughout this document, ''we,'' ''us,'' and ''our'' refer to EPA.

**Table of Contents**

I. The State's Submittal
A. What rules did the State submit?
B. Are there other versions of these rules?
C. What are the changes in the submitted rules?
II. EPA's Evaluation and Action
A. How is EPA evaluating the rules?
B. Do the rules meet the evaluation criteria?
C. What are the rule deficiencies?
D. EPA recommendations to further improve the rules.
E. Proposed action and public comment.
III. Background Information
Why were these rules submitted?
IV. Administrative Requirements

### I. The State's Submittal

*A. What Rules Did the State Submit?*

Table 1 lists the rules proposed for limited approval and limited disapproval with the dates that they were adopted by the local air agency and submitted by the California Air Resources Board (CARB).

TABLE 1—SUBMITTED RULES

| Local agency | Rule No. | Rule title | Adopted | Submitted |
|---|---|---|---|---|
| ICAPCD | 420 | Livestock Feed Yards | 09/14/99 | 05/26/00 |
| ICAPCD | 701 | Agricultural Burning | 09/14/99 | 05/26/00 |
| MBUAPCD | 403 | Particulate Matter | 03/22/00 | 05/26/00 |

TABLE 1—SUBMITTED RULES—Continued

| Local agency | Rule No. | Rule title | Adopted | Submitted |
|---|---|---|---|---|
| SJVUAPCD | 4201 | Particulate Matter Concentration | 12/17/92 | 11/18/93 |
| SJVUAPCD | 4901 | Residential Wood Burning | 07/15/93 | 12/10/93 |

On October 6, 2000, we determined that the submittals of ICAPCD Rules 420 and 701 and MBUAPCD Rule 403 met the completeness criteria in 40 CFR part 51, appendix V, which must be met before formal EPA review. On December 27, 1993, we determined that the submittal of SJVUAPCD Rule 4201 met the completeness criteria. On February 7, 1994, we determined that the submittal of SJVUAPCD Rule 4901 met the completeness criteria.

Table 2 lists the rules proposed for full approval with the dates that they were adopted or rescinded by the local air agency and submitted by the CARB.

TABLE 2—SUBMITTED RULES

| Local agency | Rule No. | Rule title | Adopted | Submitted |
|---|---|---|---|---|
| ICAPCD | 101 | Definitions | 09/14/99 | 05/26/00 |
| ICAPCD | 408 | Frost Protection | 09/14/99 | 05/26/00 |
| ICAPCD | 409 | Incinerators | 09/14/99 | 05/26/00 |
| ICAPCD | 421 | Open Burning | 09/14/99 | 05/26/00 |
| ICAPCD | 702 | Range Improvement Burning | 09/14/99 | 05/26/00 |
| MBUAPCD | 405 | Exceptions | *03/22/00 | 05/26/00 |
| MBUAPCD | 406 | Additional Exception | *03/22/00 | 05/26/00 |
| SCAQMD | 1138 | Control of Emissions from Restaurant Operations | 11/14/97 | 03/10/98 |

* Rescinded.

On October 6, 2000, we determined that the submittals of ICAPCD Rules 101, 408, 409, 421, and 702 and MBUAPCD Rules 405 and 406 met the completeness criteria. On May 21, 1998, we determined that the submittal of SCAQMD Rule 1138 met the completeness criteria.

*B. Are There Other Versions of These Rules?*

We approved versions of submitted ICAPCD Rule 101 into the ICAPCD portion of the SIP as Rule 101, Definitions, on May 27, 1982 (47 FR 23159) and as Rule 701, Definitions, on January 27, 1981 (46 FR 8472).

We approved a version of submitted ICAPCD Rule 408 into the ICAPCD portion of the SIP as Rule 408, Frost Protection and Orchard Heaters, on January 27, 1981 (46 FR 8472).

We approved a version of submitted ICAPCD Rule 409 into the ICAPCD portion of the SIP as Rule 409, Incinerators, on November 18, 1983 (48 FR 52452).

We approved a version of submitted ICAPCD Rule 420 into the ICAPCD portion of the SIP as Rule 420, Livestock Feed Yards, on February 3, 1989 (54 FR 5448). The current submittal supersedes a submittal on October 25, 1991 on which we have not acted.

We approved a version of submitted ICAPCD Rule 421 into the ICAPCD portion of the SIP as Rule 421, Open Burning—Non-Agricultural, Rule 422, Open Burning of Wood Wastes, and Rule 423, Exceptions, on February 3, 1989 (54 FR 5448).

We approved versions of submitted ICAPCD Rule 701 into the ICAPCD portion of the SIP as Rule 202, Exceptions, on August 22, 1977 (42 FR 42224) and Rule 702, Prohibitions, and Rule 706, Penalty Clause, on January 27, 1981 (46 FR 8472).

We approved a version of submitted ICAPCD Rule 702 into the ICAPCD portion of the SIP as Rule 705, Range Improvement Burning, on January 27, 1981 (46 FR 8472).

We approved versions of submitted MBUAPCD Rule 403 into the MBUAPCD portion of the SIP as Rule 403, Particulate Matter, on May 18, 1981 (46 FR 27116) and as Rule 405, Exceptions, on July 13, 1987 (52 FR 26148).

We approved MBUAPCD Rule 406, Additional Exception, into the MBUAPCD portion of the SIP on July 13, 1987 (52 FR 26148).

We approved the following versions of submitted SJVUAPCD Rule 4201 into the portions of the California SIP applicable to each of the eight counties that were unified and now comprise the SJVUAPCD:

- Fresno County Rule 404, Particulate Matter Concentration, approved on August 22, 1977 (42 FR 42219).
- Kern County Rule 404, Particulate Matter Concentration—Valley Basin, approved on August 22, 1977 (42 FR 42219).
- Kings County Rule 404, Particulate Matter, approved on August 4, 1978 (43 FR 34468).
- Madera County Rule 403, Particulate Matter Emissions from the Incineration of Combustible Refuse, approved on April 16, 1991 (56 FR 15286).
- Merced County Rule 404, Particulate Matter Concentration, June 14, 1978 (43 FR 25689).
- San Joaquin County Rule 404, Particulate Matter Concentration, approved on August 22, 1977 (42 FR 42219).
- Stanislaus County Rule 404, Particulate Matter Concentration, approved on August 22, 1977 (42 FR 42219).
- Tulare County Rule 404, Particulate Matter, approved on August 22, 1977 (42 FR 42219).

Submitted SJVUAPCD Rule 4901 is a new rule with no previous versions or submittals.

Submitted SCAQMD Rule 1138 is a new rule with no previous versions or submittals.

*C. What Are the Changes in the Submitted Rules?*

Submitted ICAPCD Rule 101 has the following changes:

- Many definitions were added or revised to correspond to requirements of the amended Clean Air Act of 1990 (CAA).
- The definitions for Major Source and Major Modification were deleted. These definitions are not relevant in Rule 207, New Source Review, because the threshold requiring new source review is more stringent than that defined for a major source or major modification.

• The definitions from SIP Rule 701 were transferred to Rule 101.

Submitted ICAPCD Rule 408 adds a prohibition to burn oil in open containers and adds requirements that orchard heaters be clean, in good repair, and be free of solids in stacks.

Submitted ICAPCD Rule 409 has the following changes:

• The specific temperature and contact time for burning was added.

• The exemption was clarified to exclude the burning of certain materials that produce smoke or toxic fumes.

Submitted Rule ICAPCD Rule 420 has the following changes:

• The submitted rule applies to all livestock feed yards subject to ICAPCD regulations, while the SIP-approved rule applies strictly to livestock feed yards located within 1.5 miles from any ''urban limit,'' as defined by the County General Plan.

• Submitted Rule 420 specifies under a new ''Test Methods'' section that moisture content shall be determined with an electrical conductivity moisture meter.

Submitted ICAPCD Rule 421 consists of SIP Rules 421, 422, and 423 combined. In addition, the following changes were made:

• The exception to the general prohibition to use an orchard heater for freeze protection was deleted.

• The exception to the general prohibition to use equipment in agricultural operations were deleted.

• The exception to the general prohibition to burn for agricultural operations for the grazing of animals or raising of cattle was deleted.

• The authority of a public officer to set or permit a fire for the remediation of an oil spill on water (presumed on a No-Burn Day) pursuant to Section 8670.7 of the California Government Code was added.

Submitted ICAPCD Rule 701 consists primarily of SIP Rule 702 renumbered to Rule 701, plus the exceptions contained in SIP Rule 202. An authority citation from SIP Rule 706 is revised and also moved into Rule 701, while the penalty clause was omitted. SIP Rule 701 contained only definitions, which were transferred to Rule 101 and will be superseded by submitted Rule 101 in another TSD. The significant changes in submitted Rule 701 are as follows:

• The APCO was granted the authority to restrict burning on Burn Days, if meteorological conditions would cause an undue amount of emissions to be transported to populated or sensitive receptor areas or cause or contribute to a violation of an ambient air quality standard.

• The requirement was added that a District inspector must be present for agricultural burns near residential areas, rural schools, or heavily travelled roads.

Submitted Rule 702 consists primarily of SIP Rule 705 renumbered. There are no significant changes between Rules 702 and 705.

Submitted MBUAPCD Rule 403 has all of the exceptions in Rule 405 transferred to it as exemptions to Rule 403. An exemption for internal combustion engines was also added.

Submitted MBUAPCD Rules 405 and 406 are rescinded.

Submitted SJVUAPCD Rule 4201 changes are as follows:

• The rules of eight old counties that unified into SJVUAPCD are combined into a single rule, which is equally as stringent.

Submitted SJVUAPCD Rule 4901 is a new rule that consists of the following:

• All new wood heaters must be EPA-certified Phase II or pellet-fueled.

• All used wood heaters must be EPA-certified or Oregon-certified or pellet-fueled.

• Retailers must provide public awareness information with each wood burner sale and cannot advertise wood as ''seasoned'' unless the moisture content is 20 percent or less by weight.

• The rule establishes a two-stage voluntary curtailment program during November through February for areas located less than 3,000 feet above mean sea level, except where wood burning is the sole source of heat or natural gas is not available. The APCO will request a Level I voluntary curtailment when a Pollutant Standards Index (PSI) of 100 or greater is predicted or request a Level II voluntary curtailment when a PSI of 150 or greater is predicted.

Submitted SCAQMD Rule 1138 is a new rule that consists of the following:

• The operator of a chain-driven charbroiler must install a catalytic oxidizer or equivalent control device that will result in an emissions decrease of about 83% for both PM–10 and VOC.

• An operator of a charbroiler with permitted control equipment operating before November 14, 1997 may continue to operate for the life of the control equipment. At this time but not later than November 14, 2007, the operator must replace the existing control equipment with a catalytic oxidizer or equivalent control device.

• An operator that cooks less than 875 pounds of meat per week or emits less than one pound per day of any criteria pollutant may apply for an exemption, but must keep records to support the exemption.

The TSDs have more information about these rules.

## II. EPA's Evaluation and Action

### *A. How Is EPA Evaluating the Rules?*

We evaluated these rules for enforceability and consistency with the CAA as amended in 1990, with 40 CFR part 51, and with EPA's PM–10 policy. Sections 172(c)(1) and 189(a) of the CAA require moderate PM–10 nonattainment areas to implement reasonably available control measures (RACM), including reasonably available control technology (RACT) for stationary sources of PM–10. Section 189(b) requires that serious PM–10 nonattainment areas, in addition to meeting the RACM/RACT requirements, implement best available control measures (BACM), including best available control technology (BACT). ICAPCD is a moderate PM–10 nonattainment area. MBUAPCD is a PM–10 attainment area and need not meet BACM/BACT or RACM/RACT control levels. SJVUAPCD and SCAQMD are serious PM–10 nonattainment areas. SCAQMD is an extreme ozone nonattainment area and is required by section 182(a)(2)(A) of the CAA to meet RACT requirements for VOC.

EPA's preliminary guidance for moderate PM–10 nonattainment areas provides that RACM/RACT is required to be implemented for all source categories unless the State demonstrates that a particular source category does not contribute significantly to PM–10 levels in excess of the NAAQS (*i.e.*, de minimis sources). See *General Preamble for the Implementation of Title I of the Clean Air Act Amendments of 1990*, 57 FR 13498, 13540 (April 16, 1992) and *Addendum to the General Preamble for the Implementation of Title I of the Clean Air Act Amendments of 1990*, 59 FR 41998 (August 16, 1994). The activities subject to ICAPCD Rule 420 contribute a significant amount of the total PM–10 emissions, and the activities subject to submitted Rules 701 and 702 contribute a small but not insignificant amount of the total PM–10 emissions in the Imperial Valley according to the September 23, 1993 *State Implementation Plan for PM–10 in the Imperial Valley* (ICAPCD PM–10 Plan). Moreover, the ICAPCD PM–10 Plan relies on SIP Rules 702, 704, and 705, which are versions of submitted Rules 701 and 702. Submitted Rules 420, 701, and 702 must meet RACM/RACT control levels. However, we are not determining at this time whether Rule 420 does so.

The activities subject to ICAPCD Rules 408, 409 and 421 do not contribute a significant amount of the total PM–10 emissions in ICAPCD

according to the ICAPCD PM–10 Plan. Therefore, ICAPCD Rules 408, 409, and 421 are not being evaluated to meet RACM/RACT control levels, but only to ensure that they do not relax the SIP in violation of sections 110(l) and 193 of the CAA and that they meet enforceability and other general SIP requirements of section 110.

The activities subject to submitted SJVUAPCD Rule 4201 contribute a small but not insignificant amount of the total PM–10 emissions in the SJVUAPCD according to the May 15, 1997 *SJVUAPCD PM–10 Attainment Demonstration Plan* (SJVUAPCD PM–10 Plan). Moreover, the SJVUAPCD PM–10 Plan relies on Rule 4201. Therefore, submitted Rule 4201 must meet BACM/BACT control levels.

The activities subject to submitted SJVUAPCD Rule 4901 contribute a significant amount of the total PM–10 emissions in the SJVUAPCD according to the SJVUAPCD PM–10 Plan. Moreover, the SJVUAPCD PM–10 Plan relies on Rule 4901. Therefore, submitted Rule 4901 must meet BACM requirements.

The activities subject to submitted SCAQMD Rule 1138 must meet BACM/BACT requirements for PM–10 and RACT requirements for VOC.

The TSDs have more information on how we evaluated the rules.

Guidance and policy documents that we used to define specific enforceability, RACM/RACT, BACM/BACT, and SIP relaxation requirements include the following:

- *PM–10 Guideline Document*, (EPA–452/R093–008).
- *State Implementation Plan for PM–10 in the Imperial Valley* (September 23, 1993).
- *General Preamble Appendix C3—Prescribed Burning Control Measures*, 57 FR 18072 (April 28, 1992).
- *Addendum to the General Preamble for the Implementation of Title I of the Clean Air Act Amendments of 1990*, 59 FR 41998 (August 16, 1994).
- *Issues Relating to VOC Regulation Cutpoints, Deficiencies, and Deviations: Clarification to Appendix D of November 24, 1987 Federal Register* (Blue Book), notice of availability published in the **Federal Register** (May 25, 1988).
- *Guidance Document for Residential Wood Combustion Emission Control Measures* (EPA–450/2–89–015).
- *Technical Information Document for Residential wood Combustion Best Available control Measures*, EPA–450/2–92–002 (September 1992).
- *Model Volatile Organic Compound Rules for Reasonably Available Control Technology* (June 1992).

*B. Do the Rules Meet the Evaluation Criteria?*

These rules are largely consistent with the relevant policy and guidance regarding enforceability and SIP relaxations. Rule provisions which do not meet the evaluation criteria are summarized below and discussed further in the TSDs.

*C. What Are the Rule Deficiencies?*

ICAPCD Rule 420 contains the following deficiencies:

- The rule lacks a test method procedure by which to determine compliance with the moisture content standard (*e.g.* minimum number of samples to be collected, specifics on collecting representative samples, whether moisture content results of each sample are to be averaged for a final result).
- The rule lacks a definition of ''rainy period.''
- The rule contains inappropriate Executive Officer discretion with respect to allowing exceptions to compliance with the rule's moisture content standard. Specific criteria for granting an exception must be included in the rule. ICAPCD Rule 701 contains the following deficiency:
- The rule has limited enforceability, because of the open-ended discretion of the Director to approve an exemption to burn on a No-Burn Day in case of imminent and substantial economic loss if the burning were not allowed. The conditions to allow such burning must be limited such that it is unlikely that the NAAQS would be violated or that there would be smoke impacts on sensitive areas. MBUAPCD Rule 403 contains the following deficiencies:
- The rule enforceability is limited, because it does not contain periodic monitoring requirements.
- The rule enforceability is limited, because it does not state the test method for PM.
- The rule enforceability is limited, because it does not require recordkeeping for at least two years. SJVUAPCD Rule 4201 contains the following deficiencies:
- The rule does not appear to meet the requirements of BACM/BACT. Other serious PM–10 nonattainment areas have lower particulate matter emission limits.
- The rule does not have periodic monitoring requirements.
- The rule does not require recordkeeping for at least two years.

SJVUAPCD Rule 4901 contains the following deficiency:

- The rule does not appear to meet the requirements of BACM, which should include restrictions on the sale and installation of woodburning fireplaces, mandatory curtailment during periods of poor air quality, and possibly other control measures.

*D. EPA recommendations to Further Improve the Rules*

The TSD for ICAPCD Rule 421 describes an additional rule revision that does not affect our current action but is recommended for the next time the local agency modifies the rule.

*E. Proposed Action and Public Comment*

As authorized in sections 110(k)(3) and 301(a) of the Act, we are proposing a limited approval of MBUAPCD Rule 403 to improve the SIP. If finalized, this action would incorporate the submitted rule into the SIP, including those provisions identified as deficient. We are simultaneously proposing a limited disapproval of this rule under section 110(k)(3). If this disapproval is finalized, no sanctions would be imposed under section 179 of the CAA because the area is PM–10 attainment and the rule is not required to maintain attainment. Note that the submitted rule has been adopted by the District, and our final limited disapproval would not prevent the local agency from enforcing it.

As authorized in sections 110(k)(3) and 301(a) of the Act, we are proposing a limited approval of ICAPCD Rules 420 and 701, SJVUAPCD Rule 4201, and SJVUAPCD Rule 4901 to improve the SIP. If finalized, this action would incorporate these submitted rules into the SIP, including those provisions identified as deficient. We are simultaneously proposing a limited disapproval of these rules under section 110(k)(3). If this disapproval is finalized, sanctions will be imposed under section 179 of the Act unless EPA approves subsequent SIP revisions that correct the rule deficiencies within 18 months. These sanctions would be imposed as described in 59 FR 39832 (August 4, 1994) because the areas are PM–10 nonattainment and the PM–10 emissions are not insignificant. A final disapproval would also trigger the federal implementation plan (FIP) requirement under section 110(c). Note that the submitted rules have been adopted by the Districts, and our final limited disapproval would not prevent the local agencies from enforcing them.

As authorized in section 110(k)(3) of the Act, EPA is also proposing a full approval of ICAPCD Rules 101, 408, 409, 421, and 702, a full approval of the recision of MBUAPCD Rules 405 and

406, and a full approval of SCAQMD Rule 1138 to improve the SIP.

We will accept comments from the public on the proposed limited approval and limited disapproval and on the proposed full approvals for the next 30 days.

## III. Background Information

### *A. Why Were These Rules Submitted?*

PM–10 harms human health and the environment. Section 110(a) of the CAA requires states to submit regulations that control PM–10 emissions. Table 3 lists some of the national milestones leading to the submittal of local agency PM–10 rules.

TABLE 3.—PM–10 NONATTAINMENT MILESTONES

| Date | Event |
|---|---|
| March 3, 1978 | EPA promulgated a list of total suspended particulate (TSP) nonattainment areas under the Clean Air Act, as amended in 1977. 43 FR 8964; 40 CFR 81.305. |
| July 1, 1987 ... | EPA replaced the TSP standards with new PM standards applying only up to 10 microns in diameter (PM–10). 52 FR 24672. |
| November 15, 1990. | Clean Air Act Amendments of 1990 were enacted, Pub. L. 101–549, 104 Stat. 2399, codified at 42 U.S.C. 7401–7671*q*. |
| November 15, 1990. | PM–10 areas meeting the qualifications of section 107(d)(4)(A) and (B) of the CAA were designated nonattainment by operation of law and classified as moderate or serious pursuant to section 186(a) and 189(a). States are required by section 110(a) to submit rules regulating CO and PM–10 emissions in order to achieve the attainment dates specified in sections 186(a)(1) and 188(c). |

## IV. Administrative Requirements

### *A. Executive Order 12866*

The Office of Management and Budget (OMB) has exempted this regulatory action from Executive Order 12866, Regulatory Planning and Review.

### *B. Executive Order 13045*

Executive Order 13045, entitled Protection of Children from Environmental Health Risks and Safety Risks (62 FR 19885, April 23, 1997), applies to any rule that: (1) is determined to be ''economically significant'' as defined under Executive Order 12866, and (2) concerns an environmental health or safety risk that EPA has reason to believe may have a disproportionate effect on children. If the regulatory action meets both criteria, the Agency must evaluate the environmental health or safety effects of the planned rule on children, and explain why the planned regulation is preferable to other potentially effective and reasonably feasible alternatives considered by the Agency.

This rule is not subject to Executive Order 13045 because it does not involve decisions intended to mitigate environmental health or safety risks.

### *C. Executive Order 13084*

Under Executive Order 13084, Consultation and Coordination with Indian Tribal Governments, EPA may not issue a regulation that is not required by statute, that significantly or uniquely affects the communities of Indian tribal governments, and that imposes substantial direct compliance costs on those communities, unless the Federal government provides the funds necessary to pay the direct compliance costs incurred by the tribal governments, or EPA consults with those governments. If EPA complies by consulting, Executive Order 13084 requires EPA to provide to the OMB in a separately identified section of the preamble to the rule, a description of the extent of EPA's prior consultation with representatives of affected tribal governments, a summary of the nature of their concerns, and a statement supporting the need to issue the regulation. In addition, Executive Order 13084 requires EPA to develop an effective process permitting elected officials and other representatives of Indian tribal governments ''to provide meaningful and timely input in the development of regulatory policies on matters that significantly or uniquely affect their communities.''

Today's proposed rule does not significantly or uniquely affect the communities of Indian tribal governments. Accordingly, the requirements of section 3(b) of Executive Order 13084 do not apply to this proposed rule.

### *D. Executive Order 13132*

Executive Order 13132, entitled Federalism (64 FR 43255, August 10, 1999) revokes and replaces Executive Orders 12612, Federalism and 12875, Enhancing the Intergovernmental Partnership. Executive Order 13132 requires EPA to develop an accountable process to ensure ''meaningful and timely input by State and local officials in the development of regulatory policies that have federalism implications.'' ''Policies that have federalism implications'' is defined in the Executive Order to include regulations that have ''substantial direct effects on the States, on the relationship between the national government and the States, or on the distribution of power and responsibilities among the various levels of government.'' Under Executive Order 13132, EPA may not issue a regulation that has federalism implications, that imposes substantial direct compliance costs, and that is not required by statute, unless the Federal government provides the funds necessary to pay the direct compliance costs incurred by State and local governments, or EPA consults with State and local officials early in the process of developing the proposed regulation. EPA also may not issue a regulation that has federalism implications and that preempts State law unless the Agency consults with State and local officials early in the process of developing the proposed regulation.

This proposed rule will not have substantial direct effects on the States, on the relationship between the national government and the States, or on the distribution of power and responsibilities among the various levels of government, as specified in Executive Order 13132, because it merely acts on a state rule implementing a federal standard, and does not alter the relationship or the distribution of power and responsibilities established in the Clean Air Act. Thus, the requirements of section 6 of the Executive Order do not apply to this proposed rule.

### *E. Regulatory Flexibility Act*

The Regulatory Flexibility Act (RFA) generally requires an agency to conduct a regulatory flexibility analysis of any rule subject to notice and comment rulemaking requirements unless the agency certifies that the rule will not have a significant economic impact on a substantial number of small entities. Small entities include small businesses, small not-for-profit enterprises, and small governmental jurisdictions.

This proposed rule will not have a significant impact on a substantial number of small entities because SIP actions under section 110 and subchapter I, part D of the Clean Air Act do not create any new requirements but simply act on requirements that the State is already imposing. Therefore, because the Federal SIP action does not create any new requirements, I certify that this action will not have a

significant economic impact on a substantial number of small entities.

Moreover, due to the nature of the Federal-State relationship under the Clean Air Act, preparation of flexibility analysis would constitute Federal inquiry into the economic reasonableness of state action. The Clean Air Act forbids EPA to base its actions concerning SIPs on such grounds. *Union Electric Co.* v. *U.S. EPA,* 427 U.S. 246, 255–66 (1976); 42 U.S.C. 7410(a)(2).

*F. Unfunded Mandates*

Under section 202 of the Unfunded Mandates Reform Act of 1995 (''Unfunded Mandates Act''), signed into law on March 22, 1995, EPA must prepare a budgetary impact statement to accompany any proposed or final rule that includes a Federal mandate that may result in estimated annual costs to State, local, or tribal governments in the aggregate; or to private sector, of $100 million or more. Under section 205, EPA must select the most cost-effective and least burdensome alternative that achieves the objectives of the rule and is consistent with statutory requirements. Section 203 requires EPA to establish a plan for informing and advising any small governments that may be significantly or uniquely impacted by the rule.

EPA has determined that the proposed action does not include a Federal mandate that may result in estimated annual costs of $100 million or more to either State, local, or tribal governments in the aggregate, or to the private sector. This proposed Federal action acts on pre-existing requirements under State or local law, and imposes no new requirements. Accordingly, no additional costs to State, local, or tribal governments, or to the private sector, result from this action.

*G. National Technology Transfer and Advancement Act*

Section 12 of the National Technology Transfer and Advancement Act (NTTAA) of 1995 requires Federal agencies to evaluate existing technical standards when developing a new regulation. To comply with NTTAA, EPA must consider and use ''voluntary consensus standards'' (VCS) if available and applicable when developing programs and policies unless doing so would be inconsistent with applicable law or otherwise impractical.

EPA believes that VCS are inapplicable to today's proposed action because it does not require the public to perform activities conducive to the use of VCS.

**List of Subjects in 40 CFR Part 52**

Environmental protection, Air pollution control, Incorporation by reference, Intergovernmental relations, Reporting and recordkeeping requirements, Ozone, Particulate matter, Volatile organic compounds.

**Authority:** 42 U.S.C. 7401 *et seq.*

Dated: December 5, 2000.

**Felicia Marcus,**

*Regional Administrator, Region IX.*

[FR Doc. 00–32025 Filed 12–14–00; 8:45 am]

BILLING CODE 6560–50–U

---

## ENVIRONMENTAL PROTECTION AGENCY

## 40 CFR Part 52

**[PA 4096b; FRL–6578–1]**

## Approval and Promulgation of Air Quality Implementation Plans; Pennsylvania; Approval of VOC and $NO_X$ RACT Determinations for Individual Source

**AGENCY:** Environmental Protection Agency (EPA).

**ACTION:** Proposed rule.

**SUMMARY:** EPA is proposing to approve revisions to the Commonwealth of Pennsylvania's State Implementation Plan (SIP). The revisions establish and require reasonably available control technology (RACT) for 56 major sources of volatile organic compounds (VOC) and nitrogen oxides ( $NO_X$) located in Pennsylvania. In the Final Rules section of this **Federal Register**, EPA is approving the revisions as a direct final rule without prior proposal because the Agency views these as noncontroversial submittals and anticipates no adverse comments. A more detailed description of the state submittals and EPA's evaluations are included in Technical Support Documents (TSDs) prepared in support of this rulemaking action. Copies of the TSDs are available, upon request, from the EPA Regional Office listed in the **ADDRESSES** section of this document. If no adverse comments are received in response to this action, no further activity is contemplated. If EPA receives adverse comments, the direct final rule will be withdrawn and all public comments received will be addressed in a subsequent final rule based on this proposed rule. EPA will not institute a second comment period. Any parties interested in commenting on this action should do so at this time. Please note that if adverse comment is received on an amendment, paragraph, or section of this rule and that provision may be severed from the remainder of the rule, EPA may adopt as final those provisions of the rule that are not the subject of an adverse comment.

**DATES:** Written comments must be received by January 16, 2001.

**ADDRESSES:** Written comments on this action should be addressed to Makeba Morris, Chief, Permits and Technical Assessment Branch, Air Protection Division, Mailcode 3AP11, U.S. Environmental Protection Agency, Region III, 1650 Arch Street, Philadelphia, Pennsylvania 19103. Copies of the documents relevant to this action are available for public inspection during normal business hours at the Air Protection Division, U.S. Environmental Protection Agency, Region III, 1650 Arch Street, Philadelphia, Pennsylvania 19103; and the Pennsylvania Department of Environmental Protection, Bureau of Air Quality Control, P.O. Box 8468, 400 Market Street, Harrisburg, Pennsylvania 17105.

**FOR FURTHER INFORMATION CONTACT:** Ray Chalmers at (215) 814–2061 for information on sources #1 through #17, Melik Spain at (215) 814–2299 for information on sources #18 through #50, or Helene Drago at (215) 814–5796 for information on sources #51 through 56.

**SUPPLEMENTARY INFORMATION:** For further information, please see the information provided in the direct final action, with the same title, that is located in the ''Rules and Regulations'' section of this **Federal Register** publication.

**Editorial note:** This document was received at the Office of the Federal Register on December 6, 2000.

Dated: March 23, 2000.

**Bradley M. Campbell,**

*Regional Administrator, Region III.*

[FR Doc. 00–31464 Filed 12–14–00; 8:45 am]

BILLING CODE 6560–50–P

**DEPARTMENT OF THE INTERIOR**

**Bureau of Land Management**

**43 CFR Groups 3000, 3100, 3200, 3400, 3500, 3600, and 3800**

**[WO–610–4111–02–24 1A]**

**RIN: 1004–AC64**

# Oil and Gas Leasing; Geothermal Resources Leasing; Coal Management; Management of Solid Minerals Other Than Coal; Mineral Materials Disposal; and Mining Claims Under the General Mining Laws

**AGENCY:** Bureau of Land Management, Interior.

**ACTION:** Proposed rule.

**SUMMARY:** This proposed rule would amend Bureau of Land Management (BLM) mineral resources regulations to increase many fees and to impose new fees to cover BLM's costs of processing certain documents relating to its minerals programs. This would include costs for actions such as environmental studies, monitoring activities, and others. When necessary, the proposed rule would add citations to BLM's authority to charge fees. The proposed fee changes are BLM's response to recommendations made by the Department of the Interior's Office of the Inspector General (OIG) in a 1988 report. This report was part of a 1980s presidential initiative which called for all Federal agencies to charge appropriate user fees for agency services, consistent with the law. The OIG recommended that BLM collect fees for processing minerals-related documents whenever possible. The primary purpose of this rulemaking is to charge those who benefit from these minerals programs, rather than the general public, the costs of BLM minerals document processing.

**DATES:** Comments on the proposed rule must be received by February 13, 2001 to be assured of consideration.

**ADDRESSES:** You may mail comments to Bureau of Land Management, Administrative Record, Room 401 LS, 1849 C Street, NW, Washington, D.C. 20240. You may also hand-deliver comments to BLM at Room 401, 1620 L Street, NW, Washington, D.C. For information about filing comments electronically, see the **SUPPLEMENTARY INFORMATION** section under ''Electronic access and filing address.''

**FOR FURTHER INFORMATION CONTACT:** For questions about fluid minerals (oil, gas, geothermal steam) call Kermit Witherbee at (202) 452–0335. For questions about solid minerals including coal call Brenda Aird at (202) 452–0350.

**SUPPLEMENTARY INFORMATION:**

I. Public Comment Procedures and Information
II. Background
III. Discussion of Proposed Rule
IV. Procedural Matters

## I. Public Comment Procedures and Information

*Electronic Access and Filing Address*

You may view an electronic version of this proposed rule at BLM's Internet home page: www.blm.gov. You may also comment via the Internet to: *WOComment@blm.gov.* Please also include ''Attention: AC–06'' and your name and return address in your Internet message. If you do not receive a confirmation from the system that we have received your Internet message, contact us directly at (202) 452–5030.

*Written Comments*

Written comments on the proposed rule should be specific, should be confined to issues pertinent to the proposed rule, and should explain the reason for any recommended change. Where possible, comments should reference the specific section or paragraph of the proposal which the commenter is addressing. BLM may not necessarily consider or include in the Administrative Record for the final rule comments which BLM receives after the close of the comment period (See **DATES**) or comments delivered to an address other than those listed above (See **ADDRESSES**). Comments, including names, street addresses, and other contact information of respondents, will be available for public review at BLM's offices at 1620 L Street, N.W., Washington, D.C. during regular business hours (7:45 a.m. to 4:15 p.m.), Monday through Friday, except Federal holidays. Individual respondents may request confidentiality. If you wish to request that BLM consider withholding your name, street address, and other contact information (such as: Internet address, FAX or phone number) from public review or from disclosure under the Freedom of Information Act, you must state this prominently at the beginning of your comment. BLM will honor requests for confidentiality on a case-by-case basis to the extent allowed by law. BLM will make available for public inspection in their entirety all submissions from organizations or businesses, and from individuals identifying themselves as representatives or officials of organizations or businesses.

## II. Background

*What Laws Authorize BLM to Charge for its Document Processing Costs?*

Federal agencies are generally authorized to do this by the Independent Offices Appropriation Act of 1952 (IOAA), 31 U.S.C. 9701.

BLM has specific authority to charge fees for processing applications and other documents relating to public lands under section 304 of the Federal Land Policy and Management Act of 1976 (FLPMA), 43 U.S.C. 1734. ''Public lands'' in FLPMA means all lands or interests in land owned by the United States and administered by BLM, excluding outer continental shelf lands and Native American lands. 43 U.S.C. 1702(e). BLM interprets this definition to mean that a mineral lease or mineral materials disposal administered by BLM, or a mining claim (for which BLM determines validity), even in land where the surface is administered by another agency, is an ''interest in land'' for the purposes of FLPMA.

[Before BLM disposes of mineral materials or issues a mineral lease on these lands, if the surface managing agency also exercises considerable authority over the mineral estate, that estate may not be sufficiently under the administrative control of BLM to qualify as ''public lands'' for purposes such as exchanges. However, once BLM issues a mineral lease or proceeds with a mineral materials disposal, we are administering an interest in the lands, and that interest now falls under the FLPMA definition of ''public lands.'' Since the Secretary of the Interior has primary jurisdiction over determining the validity of mining claims, and BLM administers the mineral estate covered by those claims, mining claims also qualify as public lands under FLPMA. Of course, BLM also has authority under the IOAA to collect fees for processing documents related to its administration of the mineral estate in these instances.]

The IOAA and section 304 of FLPMA authorize BLM to charge applicants for the cost of processing documents through rulemaking, which BLM is proposing to do through this rule. The IOAA also states that these charges should pay for the agency services as much as possible.

*What Policy Documents Deal with Charging Applicants for Processing Costs?*

These policies are explained in the Office of Management and Budget (OMB) Circular A–25, ''User Charges,'' and the Department of the Interior Departmental Manual, Part 346, ''Cost Recovery.''

*What is the Basic Policy of these Documents?*

The general federal policy is that a charge ''will be assessed against each identifiable recipient for special benefits derived from Federal activities beyond those received by the general public.'' (OMB Circular A–25.) The Department of the Interior Manual mirrors this policy (346 DM 1.2 A.) Certain activities may be exempted from these fees under certain conditions set out at 346 DM 1.2 C.

*What Does ''Cost Recovery'' Mean in this Rulemaking?*

It means reimbursement to BLM of its costs of processing a document by charging a fee to the applicant/beneficiary.

*What is the Office of the Inspector General (OIG)?*

This is an office within the Department of the Interior which studies Departmental economy and efficiency, and makes recommendations for improvement.

*What OIG Reports Affected This Rulemaking?*

OIG reports No. 89–25 (1988) and 95–I–379 (1995).

*What Did the 1988 OIG Report (No. 89–25) Recommend?*

The report recommended that BLM:

- List all the minerals-related document types for which it had authority to charge BLM processing costs to the applicant;
- Determine the BLM processing cost for each type of document and count how many were processed;
- Establish exemption standards and apply them to each type of document on the list;
- Prepare and maintain exemption documentation for exempted document types; and
- Establish and collect processing cost fees for all non-exempt types of documents.

*How Did BLM Begin Gathering Data in Response to the Report?*

BLM first conducted an inventory of about 130 types of documents in all onshore energy and mineral program areas: fluid minerals (including geothermal) resources leasing and operations; solid leasable minerals (coal and non-energy minerals) leasing and operations; mining law administration (locatable minerals); and mineral materials (salable minerals such as sand and gravel).

From this inventory BLM listed the types of documents for which it appeared we had authority to collect processing fees, and those that appeared to be exempt. BLM developed exemption standards in 1989 comprised of the first four exemption categories in the Departmental Manual and two additional categories: documents primarily benefitting the public and documents related to appeals.

*How did BLM Analyze its Costs for Types of Documents That Appeared to be Eligible for Processing Fees?*

We started with a pilot analysis in the Montana State Office, then surveyed all BLM State Offices in 1990. To ensure that the State Offices used the same data-gathering approach, the BLM Washington Office gave all State Offices a copy of Part 346 of the Departmental Manual, three types of standard forms to record the data, and detailed instructions previously tested for clarity in the Montana pilot analysis.

*Were There Differences in the Processing Costs and Number of Document Filings Processed for Each State Office?*

Yes. BLM's preliminary review of the data showed large cost differences among offices for processing certain types of documents as well as big differences in the numbers of documents filed and processed. For example, office processing costs for a mineral materials noncompetitive sale application ranged from $234 to $4,773. [The 1995 OIG report, discussed below, cites the low end of the range for this document as $81.64. 1995 OIG Audit Report, p. 3. BLM has been unable to determine the source of this figure.] As discussed below, BLM reconsidered the State Offices' estimated costs for noncompetitive sales applications and determined that the differences in estimates were attributable to unique site- or sale-specific factors.

Similarly, the number of mining law affidavits of assessment filed in State Offices for Fiscal Years 1988–1990 varied from about 2,761 to 251,564. For certain mineral-related document types, some offices had no activity during the three years sampled.

*What Did BLM do to Reconcile the Differences in the Data?*

BLM decided to use a ''weighted'' average rather than a simple average to determine a BLM-wide processing cost for each type of document. This method gave greater weight to the processing cost data from State Offices with a heavy workload, and thus more expertise, in processing a particular type of document.

Between 1995 and 1999, we re-analyzed much of the data, conducted spot checks to verify its continued validity, and adjusted it to current prices.

*What did the OIG's Follow-up Report Find?*

The report (No. 95–I–379, January 1995) found that, of the five recommendations in the 1988 OIG report, BLM had implemented the first, third, and fourth recommendations, had partially implemented the second recommendation to determine the cost and number of each document filing processed, and had not yet implemented the fifth recommendation to establish and collect BLM processing cost fees for non-exempt types of documents. The OIG sent BLM a draft of this report to which we responded in August 1994. We later met with the OIG and discussed issues raised by the report, including the issue of guidance and standards in data gathering. We also provided supplemental information to the OIG in December 1994 to resolve the issue.

*What Observations and Recommendations Did the 1995 OIG Report Make?*

The OIG noted the wide variations in estimates of the time and cost needed to process types of documents among various BLM State Offices, and made two recommendations to BLM from the draft report. First, BLM should develop document processing standards, request cost information from State Offices based on these standards and analyze and resolve significant differences in the collected data, particularly for types of documents which have major impacts on the total amount of money that BLM can recover. Secondly, BLM should expedite the establishment and collection of fees for processing types of documents which have major impacts on the total amount of money that BLM can recover, and continue efforts to establish and collect fees for other types of documents.

The report went on to say that in the supplemental information provided in December 1994, BLM told the OIG that it had developed guidance/standards ''which were used by all state offices to achieve uniformity in data gathering and reporting.'' It also said that BLM had stated we would establish a multi-program team to continue examining fees to establish a consistent cost recovery program. Based on our responses to the draft report, the final 1995 OIG report concluded that ''we consider both recommendations resolved but not implemented.''

*How did BLM Respond to the 1995 Report?*

After the 1995 report was issued, BLM created a team to update its processing cost data, with priority given to establishing and collecting fees for types of documents with a significant impact on the total amount of money that we can recover. To update the existing data and verify its accuracy, the team gathered new estimates of the number of annual filings, updated processing cost estimates, and assigned BLM minerals experts to review the data in their specialties.

*How did BLM Analyze the 1990 Cost Data for Oil, Gas, and Geothermal in Response to the 1995 OIG Report?*

BLM's fluid minerals program re-analyzed this data, comparing the data and identifying the appropriate job position, salary level, and time needed for each step indicated in BLM oil, gas, and geothermal Handbooks to process each type of document. The 1990 data was also based on the steps in the Handbooks. Based on this analysis, we calculated a direct cost (see discussion of direct/indirect costs below) for each step of the process, which was then adjusted to 1995 salary rates without a locality factor. Indirect costs were later added. We used these cost figures in this proposed rule as the actual cost estimates for oil and gas and geothermal document types, from which the fees were determined. This method was used for oil and gas and geothermal because the assigned program expert believed it would yield accurate cost estimates.

*How did BLM update the 1990 Cost Data for Mineral Materials, Coal, Nonenergy Leasable Minerals, and Mining Law in Response to the 1995 OIG Report?*

We spot checked the data by resubmitting it to selected State Offices which often process these particular categories of documents. We also sent these offices a summary of the cost data that office had previously submitted for these types of documents, along with the BLM-wide weighted average cost for each of them. We requested that the State Offices review the cost data and report whether that data, adjusted to current prices, remained reasonable. We also requested that the State Office re-estimate costs for that state if it found the re-examined adjusted cost data to be unreasonable for that time period. This re-examination verified the current validity of BLM's data and ensured that figures which varied significantly among offices had not been submitted in error. We used this method for these programs because our program experts believed it would yield accurate data and be cost-effective.

Also, in mineral materials, the team reconsidered the State Offices' estimated costs for non-competitive sale applications which the 1995 report had highlighted. The team determined that the differences among State Offices were largely caused by unique site- or sale-specific factors, such as the amount and nature of surface disturbance (for example, whether the sales are from existing or new pits, and how much material is to be removed); the impact on other surface resources (which may vary even within the same area); and National Environmental Policy Act (NEPA) analysis.

To bring the figures in line with 1999 prices, BLM adjusted them to the Implicit Price Deflator for Gross Domestic Product for 1998 (the most recent year available) published by the U.S. Department of Commerce, which economists generally consider to be the most reliable general price index.

*How Has BLM Implemented the 1995 OIG Recommendations?*

As explained above, BLM resolved the first part of the OIG's first recommendation about what standards we used by sending the OIG information in response to the draft report about our use of concrete standards in data collection. BLM updated the proposed fees and updated, analyzed, and verified the data, which responded to the second part of the OIG's first recommendation. This rule proposes to implement the first part of the second 1995 OIG recommendation: BLM would collect fees for types of documents that have a significant impact on the amount of money BLM can recover. This proposed rule covers only some of the documents for which BLM has the authority to recover costs. BLM intends to continue to work on establishing and collecting fees for other documents as well, including those addressed in the Solicitor's Dec. 5, 1996 M Opinion on this subject (M–36987). This satisfies the second part of the OIG's second recommendation.

## III. Discussion

*What Kinds of Fees Would This Rule Create?*

This rule would establish fixed fees and fees based on BLM's case-by-case processing costs. A fixed fee remains the same for each document of a particular type. How BLM set these fixed fees is explained below. A fee based on BLM's case-by-case processing costs would be calculated by tracking the ongoing costs of processing an individual document.

Fixed fee amounts set by rulemaking would not be appealable to the Interior Board of Land Appeals (IBLA) because rulemaking actions are binding on the Department. Case-by-case fees could be appealed in accordance with the Department's general appeals rule at 43 CFR Part 4. BLM would not continue processing a document while an appeal is pending unless the applicant paid the fee under protest. In that case, if the final decision were that the fee was too high, BLM would refund the overpayment. See 43 U.S.C. 1734(c).

### The FLPMA Factors

*How Did BLM Set These Fees?*

Section 304(b) of the Federal Land Policy and Management Act (FLPMA) lists six factors (the FLPMA ''reasonableness'' factors) that BLM must consider in deciding what is a reasonable processing fee. They are:

(1) BLM's actual costs to process a document. This does not include management overhead, which means costs of BLM State Directors and Washington office staff, except when a member of this group works on a specific authorization like a lease. Actual costs include (but are not limited to) such costs as money spent on special studies, environmental impact statements and other analysis, and monitoring exploration activities, development, construction, production, operation, maintenance, or termination of an authorized facility.

(2) The monetary value, or objective worth, of the right or privilege that the applicant seeks.

(3) The efficiency with which BLM processes a document, meaning with a minimum of waste by carefully managing agency expenses and time.

(4) Whether any of BLM's processing costs, for things such as studies or data collection, benefit the general public or the federal government, rather than just the applicant. This is referred to in the statute as ''benefit of the general public interest.''

(5) Whether the project provides any significantly valuable tangible improvement, such as a road, or other direct service to the public. This is referred to in the statute as ''public service.'' However, a negative factor, such as an adverse impact on wildlife or surface drainage, may prevent an improvement from being a public service. Data collection that we need to monitor an activity is not a public service.

(6) Any other relevant factors.

*How Did BLM Consider the FLPMA Factors?*

We considered each of the FLPMA factors for each type of document for which we are proposing a fixed fee in this rule. We first estimated the actual cost for a type of document and then considered each of the other FLPMA factors to see if any of them might cause a fee to be set at less than actual cost. If so, we then considered whether any of the remaining factors acted as an enhancing factor that would mitigate against setting the fee at less than actual cost. We then decided the amount of the fee, which cannot be more than our processing cost. For most minerals actions in this proposal this method resulted in fees set at our actual processing cost.

This weighing of the factors would also be applied to fees that are determined on a case-by-case basis. For those fees, BLM would give the applicant an estimate of the proposed fee after estimating the actual cost of processing the individual document and considering the other FLPMA factors. The applicant could then comment on the proposed fee. We would consider the applicant's comments and any work to be performed by the applicant, and give the applicant a final fee estimate. We could re-estimate reasonable costs whenever necessary. If the fee is set at less than our actual costs because of one of the FLPMA factors, processing could not proceed until funding for the shortfall became available through the BLM budget, contributions by the applicant, or other means.

In considering the FLPMA factors we found several trends. First, the monetary value of the right or privilege was much greater than the processing cost. Also, our document processing procedures, which are based on standard steps in internal BLM Handbooks, are reasonably efficient.

We also found that none of the studies or data collection performed as part of BLM's document processing significantly benefits the general public. [The courts have held that processing which an agency is required to perform in connection with a specific request (for example, before approving a permit) provides a special benefit to an applicant, even if it also provides some benefit to the public. See, e.g., *Mississippi Power & Light Co.* v. *United States Nuclear Regulatory Comm'n*, 601 F.2d 223 (5th Cir. 1979), *cert. denied* 444 U.S. 1102 (1980).] We found that any small benefit to the public provided by the processing of fixed fee documents in this rulemaking is speculative and outweighed by the monetary value to the applicant of the right or privilege.

Furthermore, the applicant's project usually provides little or no service to the public. If a project provides a small public service, it will usually be outweighed by the monetary value to the applicant of the right or privilege. Finally, there are usually no other relevant factors.

**Actual Costs**

*Did BLM Consider Figuring and Charging Processing Costs on a Case-by-Case Basis for Every Type of Document?*

Yes. We decided not to do this because it would require enormous effort and expense. Also, when we can reliably estimate costs for routine services, we believe applicants benefit from knowing fees in advance. We will therefore determine costs on a case-by-case basis only for types of documents where the average processing cost may not be a reasonably accurate estimate because costs may differ significantly in each case.

*How Does BLM Figure Its Costs to Process a Document?*

Actual costs are the sum of both direct and indirect costs. Direct costs include such things as labor, material and equipment; BLM's measurement of direct costs is explained below. Indirect costs include items like rent and overhead, excluding State Director and Washington Office management overhead.

For an example of how BLM would determine the sum of direct and indirect costs, suppose the measured direct cost of processing a document is $200. To estimate the indirect cost for processing that document, the BLM office would use a ratio already determined in its accounting system—perhaps, ten to one, meaning for every $10 of direct costs there would be $1 of indirect costs. BLM would then estimate the indirect cost using the ratio and direct cost figures. In this example, since the direct cost was $200 and the ratio is ten to one, the indirect cost is $20. BLM then would add the direct and indirect cost figures to arrive at the actual cost figure of $220 to process the document. This method is generally accepted in the private and public sectors.

When we set fees at actual cost in the proposed rule, we rounded the cost figures down to the nearest zero or five for amounts over $10. For example, a cost figure of $157 was rounded down to $155 and a figure of $153 was rounded down to $150. For amounts under $10, we rounded the cost figures down to the nearest dollar. We did not round any cost figures up, to avoid charging more than actual processing costs.

*For What Types of Documents Would BLM Measure Actual Costs on a Case-by-Case Basis?*

- Geophysical exploration applications for oil and gas;
- Competitive lease applications for coal;
- Royalty rate reduction applications for coal;
- Logical mining unit applications and applications for LMU modifications for coal;
- Applications for lease modifications for coal;
- Prospecting permit applications for non-energy leasable minerals;
- Preference right lease applications for non-energy leasable minerals;
- Competitive lease applications for non-energy leasable minerals;
- Royalty rate reduction applications for non-energy leasable minerals;
- Non-competitive sale applications for mineral materials;
- Competitive sale applications for mineral materials;
- Lease or sales applications when an Environmental Impact Statement (EIS) is required;
- Mining plans of operations when an EIS is required; and
- Mineral validity examinations/reports (includes field mapping, field sampling, assays, determination of reserves and marketability, *etc.*).

*What Would Case-by-Case Fee Calculations Include?*

They would include all costs we incur while processing your document, such as the costs of studies BLM conducts to comply with legal requirements like environmental laws, the mineral leasing laws, or the Mining Law of 1872. For a mineral validity examination/report, the mineral examiner would consider the cost to the claimant of the examination and report along with other costs of doing business in evaluating whether the claimant has made a valuable discovery of minerals on the claim. This is because the cost of a mineral exam/report is a business cost similar to the cost of complying with environmental requirements, which is significant in deciding whether there has been a discovery. See *United States* v. *Pittsburgh Pacific Co.,* 30 IBLA 388, 84 I.D. 282, 290 (1977); *United States* v. *Kosanke Sand Corp.,* 12 IBLA 282, 298–99, 80 I.D. 538, 546–47 (1973) (on reconsideration).

Also, although current proposed section 3800.5 refers to applicants for a plan of operations or a mineral patent

''under this part,'' *i.e.,* 43 CFR Part 3800, BLM may provide in the final rule that BLM will also recover costs of validity examinations and reports performed in connection with plan of operations applications that are submitted under other parts of the CFR as well, such as 36 CFR Part 9 (which implements the Mining in the Parks Act).

*How Would the Proposed Fees Be Applied to Documents that BLM is Already Processing?*

If BLM accepted your documents before the final rules were in effect, and fees for such documents would have been subject to fixed fees under the new rules, you would not be required to pay such fees. If we accepted your document prior to a final rule, and fees for such a document would be calculated on a case-by-case basis under the new rule, you would be charged fees on that basis for any processing work that must still be done after the final regulations went into effect. This is because filing an application will not exempt you from subsequent regulations. See *Hannifin* v. *Morton,* 444 F.2d 200, 202–203 (10th Cir. 1971). You would not be charged for the processing that took place prior to the regulations going into effect, however, unless a prior regulation or agreement required it.

*Did BLM Consider Figuring and Charging Processing Costs on a Case-by-Case Basis for Every Type of Document?*

Yes. We decided not to do this because it would require enormous effort and expense. Also, when we can reliably estimate costs for routine services, we believe applicants benefit from knowing fees in advance. We will therefore determine costs on a case-by-case basis only for types of documents where the average processing cost may not be a reasonably accurate estimate because costs may differ significantly in each case. To illustrate the case-by-case variation of BLM's processing cost, costs for processing a ''noncompetitive mineral material sales'' range from $282 to $5,747 with an average cost of $2,350.

*How Did BLM Measure its Direct Actual Costs for Types of Documents it Proposes not to Measure on a Case-by-Case Basis?*

We used an agency-wide average cost figure for each type of document. This is a reasonable approximation of our actual processing cost for that document type, as well as an efficient method of measuring the cost.

*What are the New Proposed Fixed Fees?*

| Category-Fixed Fee | Existing fee | Proposed fee |
|---|---|---|
| Oil and Gas: | | |
| Noncompetitive lease application | $75 | $305 |
| Competitive lease application | 75 | 120 |
| Assignment and transfer | 25 | 70 |
| Name change, corporate merger or transfer to heir/devisee | 0 | 160 |
| Lease consolidation | 0 | 335 |
| Lease renewals or exchanges | 75 | 305 |
| Lease reinstatement, Class 1 | 25 | 60 |
| Leasing under right-of-way | 75 | 305 |
| Geothermal: | | |
| Noncompetitive lease application | 75 | 305 |
| Competitive lease application | 0 | 120 |
| Assignment and transfer | 50 | 70 |
| Name change, corporate merger or transfer to heir/devisee | 0 | 160 |
| Lease reinstatement | 0 | 60 |
| Nonenergy Leasable: | | |
| Prospecting Permit application amendment | 0 | 50 |
| Extension of Prospecting Permit | 0 | 80 |
| Lease Renewals | 25 | 390 |
| Mining Law Administration: | | |
| Notice of Location | 10 | 15 |
| Amendment to location | 5 | 10 |
| Transfer of Interest | 5 | 10 |
| Affidavit of Assessment Work | 5 | 10 |
| Notice of Intent to Hold | 5 | 10 |
| Deferment of Assessment | 25 | 80 |
| Mineral Patent Adjudication | 0 | 2,290 |
| Adverse claim | 10 | 80 |
| Protest | 10 | 50 |

*What Data Did BLM Use to Calculate the Average Cost?*

We used the data collected from State Offices in 1990, as analyzed and updated in 1995–1996 and in 1999. In the areas of oil and gas and geothermal, we used our re-analyzed direct cost estimate, to which indirect costs were added, as the average cost figure. In other areas, we used the weighted average cost, which included indirect costs, as the average cost figure.

*What Processing Steps are Included in the Fixed Fees?*

Oil & Gas

For noncompetitive lease applications, fixed fees would include receiving, validating, and entering data; examining land availability; sorting parcels (i.e., developing parcel configuration/acreage); preparing stipulations; preparing sale notices; noting title records; preparing and conducting sale auctions; preparing lease decisions, and entering and transmitting data updates.

For competitive lease applications, fixed fees would include preparing sale notices; noting title records; preparing and conducting sale auctions; preparing lease decisions; and entering and transmitting data updates. This fee does not at this point include steps leading to sorting parcels, *i.e.* developing parcel configuration/acreage, and preparing stipulations.

For assignments and transfers, fixed fees would include receiving,

validating, and entering data; examining assignment and transfer forms; reviewing leases and bonds; and approving, entering, and transmitting updates. For assignments and transfers due to name changes, corporate mergers, or transfer to an heir or devisee, fixed fees would include receiving, validating, and entering data; examining requests; determining successors-in-interest or other special requirements; reviewing leases and bonds; preparing decisions; and entering and transmitting updates.

For transfers of overriding royalties or payments out of production, fixed fees would include receiving, validating, and entering data.

For lease consolidations, fixed fees would include receiving, validating, and entering data; examining requests, lease term conditions, and productions; preparing new leases and decisions; and entering and transmitting updates.

For lease renewals, fixed fees would include receiving, validating, and entering data; examining requests and lease forms for compliance; preparing decisions; and entering and transmitting updates.

For Class 1 lease reinstatements, fixed fees would include receiving, validating, and entering data; examining eligibility; preparing decisions; and entering and transmitting updates.

Geothermal

For noncompetitive lease applications, fixed fees would include receiving, validating, and entering data; examining land availability; sorting parcels (*i.e.,* developing parcel configuration/acreage); preparing stipulations; preparing sale notices; noting title records; preparing and conducting sale auctions; preparing lease decisions; and entering and transmitting data updates.

For competitive lease applications, fixed fees would include preparing sale notices; noting title records; preparing and conducting sale auctions; preparing lease decisions; and entering and transmitting data updates. This fee does not at this point include steps leading to sorting parcels, *i.e.* developing parcel configuration/acreage, and preparing stipulations.

For assignments and transfers, fixed fees would include receiving, validating, and entering data; examining assignment and transfer forms; reviewing leases and bonds; and approving, entering, and transmitting updates. For assignments and transfers due to name changes, corporate mergers, or transfer to an heir or devisee, fixed fees would include receiving, validating, and entering data; examining requests; determining successors-in-interest or other special requirements; reviewing leases and bonds; preparing decisions; and entering and transmitting updates.

For lease reinstatements, fixed fees would include receiving, validating, and entering data; examining eligibility; preparing decisions; and entering and transmitting updates.

Nonenergy Leasable Minerals

For prospecting permit application amendments, fixed fees would include receiving, validating, and entering data; examining requests and rental payments; and entering and transmitting updates.

For prospecting permit extensions, fixed fees would include receiving, validating, and entering data; examining requests and diligence; and approving, entering, and transmitting updates.

For lease renewals, fixed fees would include receiving, validating, and entering data; examining requests; determining changes in bonds and stipulations; preparing decisions; and entering and transmitting updates.

Mining Law Administration

For notices of location, fixed fees would include receiving data and validating land status; collecting statutory fees; and entering data.

For amendments to a location, fixed fees would include receiving, validating, and entering data.

For a mineral patent adjudication, fixed fees would include receiving and entering data; examining mineral surveys, statements required by statute, initial descriptions of geology and mineral evidence, and status of adverse claims; ensuring sufficiency of title evidence (title opinion or abstract with certified copies of location certificates and all amendments); publishing legal notices; receiving and examining final proofs and statements for sufficiency; accepting purchase monies; forwarding the application to the Secretary for review; and issuing decisions. Fixed fees would not include the cost of a mineral examination and report.

For assignments and transfers, fixed fees would include receiving, validating, and entering data.

For affidavits of assessment work, fixed fees would include receiving, validating, and entering data.

For notices of intent to hold, fixed fees would include receiving, validating, and entering data.

For deferments of assessment work, fixed fees would include receiving and entering data; examining requests; determining eligibility; approving or rejecting requests; entering and transmitting updates; and issuing decisions.

For adverse claims, fixed fees would include receiving and entering data; examining evidence; accepting or denying claims; and issuing decisions.

For protests, fixed fees would include receiving and entering data; examining evidence; and issuing decisions either to dismiss or accept a protest. Fixed fees would not include costs associated with adjudications to correct errors or omissions uncovered by a protest.

*How Would BLM Deal With Increased Costs Due to Inflation?*

We would adjust the fees periodically to the Implicit Price Deflator, discussed above, to bring them in line with current costs. We chose this method because the alternative is to collect data periodically to adjust fees to inflation, which is inefficient, costly, and impractical. When we do adjust fees, we will publish them in the **Federal Register**.

*Might BLM Adjust its Average Cost Figures and Revise Fees in the Future for Reasons Other Than Inflation?*

Yes. The fees in this rule do not include certain internal steps for which we believed costs could not be recovered when we initially collected data. For example, the costs for processing an oil and gas or geothermal competitive lease sale parcel do not include the steps required to prepare an individual sale parcel prior to preparing the sale notice, because we assumed those costs were not recoverable. However, the Solicitor's Dec. 5, 1996 Opinion on cost recovery concluded that we can recover costs for those steps, so in future rules we will propose fees that attempt to capture these costs and other costs not captured here so that fees will accurately reflect our reasonable costs. We may also amend fees when we receive new data or have another reason to believe that fees do not accurately reflect reasonable costs.

**Monetary Value of the Right or Privilege**

*Did BLM Calculate Exact Figures for Monetary Values in Setting the Proposed Fixed Fees?*

No. We decided not to try to calculate exact figures either by document type or on a case-by-case basis because that would involve extensive time and resources, and because we can reasonably judge the magnitude of these values relative to our costs. We have considered monetary value in terms of fairness rather than precise figures before, in the preamble to the 1986 rights of way regulations (51 FR 26836).

*How Did BLM Decide the Monetary Value of the Right or Privilege Granted by a Fixed Fee Document?*

We relied on the monetary value of past similar rights or privileges, which we believe is a good yardstick. We reviewed each type of document, and compared the proposed processing fee for a given type of document with our knowledge of the historical values of rights or privileges granted similar to those sought by the applicant. In each case, we believe the value of the right or privilege is clearly so much greater than the processing cost that a fee set at the average actual cost would not significantly impact the proposed project. Please note, the only fixed fee in this proposed rule that exceeds $390 is for the administrative processing of a mineral patent application (excluding the cost of the mineral examination and report), for which the proposed fee is $2,290. All other proposed fees range from $9 to $390. The costs this rule would recover pertain to documents related to the development of commercial minerals, so it is not surprising that the monetary value of the right or privilege is greater than these proposed fees. Therefore, we did not reduce any fees as a result of this factor. We will consider monetary value for case-by-cases fees in a similar manner.

*What About Leases Which Are Found After Exploration To Have Less Value Than Previously Thought?*

BLM bases its decision about the value of the right or privilege on monetary value at the time the lease application is submitted. All leases have relatively large monetary value before exploration compared to the proposed fees. The intrinsic value of the opportunity afforded by a lease to explore for minerals is shown by the willingness of industry to pay large sums before exploration for bonus bids (for coal leases), for lease transfers, and for exploration activities such as drilling. We therefore decided that it is reasonable to charge a fee equal to our processing costs for all lease applications.

*How Did BLM Consider the Value of Requests for Lease Sales, Requests for Sales, or Expressions of Interest?*

In accordance with the Solicitor's Dec. 5, 1996 Opinion on cost recovery, BLM considers that its processing costs to prepare parcels for sale or lease sale benefit three classes of beneficiaries: the party who requests that the parcel be included in the sale or lease sale; all parties who bid on the parcel; and the successful bidder.

While the party who requests that a parcel be included in a sale or lease sale benefits by influencing the selection of parcels offered, we believe this benefit is greatly outweighed by the benefits to the bidder who ultimately obtains the lease or sales contract and can develop the minerals on the parcel. Similarly, while all bidders get the chance to be considered for a lease or sales contract, BLM believes this benefit is greatly outweighed by the benefits to the bidder who obtains the lease or sales contract. We would therefore charge all processing costs to prepare a parcel for lease or sale to the successful bidder.

**The Efficiency Factor**

*What Did BLM Consider When It Looked at Efficiency in Relation to the Proposed Fixed Fees?*

We wanted to be sure that the process of collecting fees is not itself overly costly. For example, we would not collect cost data on a case-by-case basis for each document processed because that kind of cost tracking is simply inefficient—employees' tracking time spent on each document just adds to the processing costs.

We looked for other ways to establish fees and decided that for most documents in this rulemaking, it was more efficient and sufficiently reliable to set a fixed fee. As discussed above, when fixed fees would be unreliable or unreasonable, we would track costs on a case-by-case basis.

*Did BLM Determine That the Documents for Which Fees Are Charged in This Rulemaking Are Processed Efficiently?*

Yes. The processing procedures are based on standardized steps in BLM Handbooks in order to eliminate duplication and extraneous procedures. These detailed and measurable processing steps were developed to be efficient.

**Public Benefit Factor**

*Are There Some BLM Activities That Only Benefit the Public and Do Not Benefit Any Particular Applicant?*

Yes. Activities that only benefit the public are those that are not done in connection with processing a particular document. These would include studies which BLM is required to perform whether or not it receives an application or other document processing request, such as land use planning studies and programmatic environmental analyses prepared by an agency at its own instigation. We would not recover the costs of such studies from applicants. Therefore, BLM did not consider studies or data that only benefit the public when it considered the public benefit factor in establishing the fixed fees proposed in this rule.

*If Processing a Document Requires That a Study Be Done, Does That Study Always Benefit the Applicant?*

Yes. Courts have held that if the processing of an application requires that a study be done, the performance of that study necessarily benefits the applicant. *See, e.g., Mississippi Power & Light Co.* v. *United States Nuclear Regulatory Comm'n,* 601 F.2d 223, 231 (5th Cir. 1979). The most obvious benefit is that the application may be approved and the applicant can then operate. If a study is required, we cannot approve an application unless the study is performed, and if we do not approve an application, the applicant cannot take the action for which it seeks approval.

There are other potential benefits, as were pointed out in the preamble to BLM's 1986 rights-of-way regulations:

> Public comment on environmental issues often helps to [defuse] political opposition to a project. An environmental impact statement may uncover an environmentally acceptable alternative which may allow an otherwise unacceptable project to be built. Special studies of seismic and climatic conditions sometimes reveal that the applicant's original proposal would not meet necessary engineering standards or is otherwise flawed. When an accident is prevented or money saved because higher standards are used, an applicant benefits because the [project] is not interrupted. These types of benefits are difficult to measure and may not be apparent until after a project has been completed and has operated for many years.

51 FR 26836, 26837–38. These benefits of environmental studies are also applicable to minerals actions. Although they are speculative, substantial benefits such as these can exist.

*How Did BLM Consider the Public Benefit From Its Document Processing?*

Possible public benefits from BLM processing activities such as studies or data collection are also speculative. For example, studies related to document processing often provide natural resource information about an area, and this is sometimes a public benefit, but its value or whether there will be a benefit at all is not predictable. BLM concluded that document processing for types of fixed fee documents in this rulemaking does not usually produce studies or data significantly beneficial to the public.

Also, except for fees determined on a case-by-case basis, BLM determined that for each type of document in this

rulemaking the monetary value to the applicant outweighs the possible benefit of such studies to the public. BLM analysts used their knowledge of the historical values of such cases to make these determinations. We have therefore decided that this factor does not warrant setting any fee in this rulemaking at less than its actual processing cost.

**Public Service Factor**

*How Is a Project's Service to the Public (Public Service) Different From Benefits the General Public Derives From BLM's Processing (Public Benefit)?*

A project's service to the public concerns whether the applicant's project itself, as opposed to BLM's processing the related documents, provides some significant direct service or benefit to the general public. This is referred to in the statute as ''public service.'' Examples would be improvements such as roads, trails, or recreation facilities. But not every improvement provided by a project is considered a public service. A negative impact on such things as wildlife or surface drainage may prevent BLM from considering an improvement as a public service.

*Does Exploration Data Shared With the Government for Purposes Other Than Monitoring Constitute a Public Service?*

Yes. Applicants for prospecting permits for nonenergy minerals are required to share with the government the mineral resource data obtained from exploration. If the information is valuable for mineral development, we expect the prospecting permit holder will use it. In that case, the monetary value of the information to the permittee would far outweigh its benefit to the public.

We considered that even information which is not valuable to the prospecting permit holder for mineral development may still provide a small geological or geophysical information benefit to the government, which could sometimes be used in types of resource management such as land classifications. However, because there is very little information obtained in this way and because its use is unpredictable, the potential benefits of the information to the public are too small to warrant an adjustment to the proposed fee.

*Do Projects in This Proposed Rule Subject to a Fixed Fee Generally Provide a Public Service?*

No. Large projects could include road construction, but such roads are rarely open to the public or built to public safety standards. Also, they must eventually be removed. These roads also often do not serve the public interest because they cause erosion and drainage problems and, if opened to the public, can bring too many people into sensitive areas. Thus, for fixed fee documents, the possibility of such a public service is too remote and speculative to warrant charging a fee less than actual costs. If any projects do provide such a public service, it is more likely to be those that require an environmental impact statement. For those projects, we will consider all of the reasonableness factors, including public service, on a case-by-case basis.

**Other Factors**

*Are There any Other Factors That Made it Reasonable to Set a Fee in This Proposed Rulemaking at Less Than Actual Cost?*

Yes. Protests of mineral patent applications provide a benefit to BLM by reducing the potential for error in the patent process. The fee for processing patent protests was therefore set at $50, which is less than BLM's actual processing cost of $255.

BLM did not find other factors that made it reasonable to adjust fees set in this proposed rulemaking. When BLM charges fees on a case-by-case basis, applicants could raise other factors during the fee-setting process.

[Please note, the proposed regulatory language below is based on regulations as they now exist. However, BLM has recently proposed changes to parts 3100 (oil & gas) and 3809 (surface management) of this title. We may need to change any final regulations which result from this proposal to fit with new regulations at those parts, should BLM issue final rules in either program.]

**IV. Procedural Matters**

*National Environmental Policy Act*

BLM has determined that this proposed rule is administrative and involves only procedural changes addressing fee requirements. Therefore, it is categorically excluded from environmental review under section 102(2)(C) of the National Environmental Policy Act, pursuant to 516 Departmental Manual (DM) 2.3A and 516 DM 2, Appendix 1, Item 1.10. In addition, the proposed rule does not meet any of the 10 criteria for exceptions to categorical exclusions listed in 516 DM 2, Appendix 2. Pursuant to Council on Environmental Quality regulations (40 CFR 1508.4) and the environmental policies and procedures of the Department of the Interior, the term ''categorical exclusions'' means categories of actions which do not individually or cumulatively have a significant effect on the human environment and which have no such effect in procedures adopted by a Federal agency and therefore require neither an environmental assessment nor an environmental impact statement.

*Paperwork Reduction Act*

This rule does not contain information collection requirements that the Office of Management and Budget must approve at this time under the Paperwork Reduction Act of 1995, 44 U.S.C. 3501 *et seq.* This rule potentially affects the following information requirements approved under the provisions of the Paperwork Reduction Act of 1995, 44 U.S.C. 3501 *et seq.:*

1004–0025, Mineral Surveys, Mineral Patent Applications, Adverse Claims, Protests, and Contests;
1003–0034, Oil and Gas Lease Transfers;
1004–0073, Coal Management;
1004–0074, Oil and Gas and Geothermal Resources Leasing;
1004–0103, Mineral Materials Disposal;
1004–0114, Payment and Recordation of Location Notices and Annual Filings for Mining Claims, Mill Sites, Tunnel Sites;
1004–0121, Leasing of Solid Minerals Other Than Coal and Oil Shale;
1004–0132, Geothermal Resources Operations: General;
1004–0134, Onshore Oil and Gas Operations: Non-form items;
1004–0135, Sundry Notices and Reports on Wells;
1004–0136, Oil and Gas Applications for Permits to Drill;
1004–0137, Oil and Gas Well Completion or Recompletion Report and Log;
1004–0145, Oil and Gas Exploration and Leasing;
1004–0160, Geothermal Leasing Reports;
1004–0162, Oil and Gas Geophysical Exploration Operations;
1004–0169, Use and Occupancy under the Mining Laws;
1004–0176, Surface Management Regulations at 3802 and 3809; and
1004–0184, Onshore Oil and Gas Leasing and Operations.

This rule affects the information collections just listed not by decreasing or increasing the information requirements described in these collections but by establishing or changing the costs of filing the applications and reports included in these collections. When this rule becomes final, BLM will file change notices with the Office of Management and Budget (OMB), Form 83c, to reflect the new or changed fees established by the final rule.

*Regulatory Flexibility Act*

This rule will not have a significant economic effect on a substantial number of small entities as defined under the Regulatory Flexibility Act (5 U.S.C. 601 *et seq.*). A Regulatory Flexibility Analysis is not required. Accordingly, a Small Entity Compliance Guide is not required. For the purposes of this section a ''small entity,'' as defined by the Small Business Administration for mining (broadly inclusive of metal mining, coal mining, oil and gas extraction, and the mining and quarrying of nonmetallic minerals) is an individual, limited partnership, or small company considered to be at ''arm's length'' from the control of any parent companies, with fewer than 500 employees. The SBA defines a small entity differently, however, for leasing of federal land for coal mining: a coal lessor is a small entity if it employs not more than 250 people, including people working for its affiliates. SBA would consider many of the operators the BLM works with in the onshore minerals programs small entities. [We note that this proposed rule does not affect service industries, for which the SBA has a different definition of ''small entity.'']

The proposed rule will affect a large number of small entities since nearly all of them will face fee increases for activities on public lands. However, we have concluded that the effects will not be significant. As discussed in an analysis prepared by BLM and available as an attachment to our Record of Compliance for this proposed rule, when the total fees paid by these entities are expressed as a percentage of their sales value it is clear that the relative size and effect of the fees are very small and that they will have no measurable effect on these entities.

For example, we estimate that under this rule oil and gas operators on public lands would pay an extra $2,052,000 in fees annually, but the small operators in the oil & gas program generate sales of $2.9 billion to $4.8 billion annually, so the increased fees would be 0.04% to 0.07% of sales, even assuming small operators bore the entire fee increase. The small operators developing mineral materials on public lands generate $60 million to $99 million in annual sales, while the total fees for the mineral materials industry would rise by about $866,000, or 0.875% to 1.443% of sales. This is the highest percentage of sales versus increased fees.

Additionally, for mineral materials, based on data for FY96, FY97, FY98, this proposed rule would affect on average only about 13.5% of the disposals on public lands. The rule would not affect the remaining 86.5% of disposals, consisting of small sales from community pits, and common use areas, and free use permits to government entities and non-profit organizations. And, of course, this rule would not affect small operators on non-public lands.

Finally, we note that most of the proposed fees are charged only once and, therefore, the impact is spread over several years of industry production. This has the effect of lessening the impact even further. Also, leasable and mineral materials sales are for fair market value, so we can expect bonus bids to decline in order to offset and neutralize the new or increased costs.

Due to the size of the proposed fee increase, it is worth discussing mineral patent adjudication and associated mineral examination fees and their possible effect on small entities. These fees apply to hardrock mineral patent applications under the Mining Law of 1872, which, when approved, result in a transfer of title from the United States to the mining claimant. Patenting is a voluntary process and is not required under the law. Mining claimants who have found a valuable mineral discovery on the public lands and properly located a claim may mine and market the minerals on the claim without a patent and without paying any royalties to the United States.

Fixed fees for patent applications are set in this proposed rule at $2,290 for adjudication of title and sufficiency of the application, plus a case-by-case fee for the actual mineral examination of the mining claims or sites in the application. Although this is an appreciable increase, it is not significant compared to the capital expenditures associated with many hard rock mining ventures, which may range from hundreds of thousands of dollars for small operations to hundreds of millions of dollars for large ventures. The smaller the entity, the more likely it is that the application will seek to patent fewer mining claims, reducing the time needed for BLM's mineral examination. Because fees for the mineral examination are based largely on a case-by-case tracking of our actual time and the costs to us, applications with fewer claims will generally be charged fees at the low end of the possible range.

BLM is also operating under a moratorium for processing any new mineral patent applications and a Congressional Five-Year Plan (Public Law 104–134) which required the Secretary to establish a plan for how the Department would complete its review of 90% of grandfathered mineral patent applications by September 30, 2001. Because of the patenting moratorium, future activity in the adjudication and mineral examination of mineral patent applications is expected to decline significantly in the near future and thus these fees will be rarely applied. Moreover, because claimants have a recognized property interest in a valid unpatented mining claim and can enjoy the benefits of mining and marketing from their claims without ever applying for a patent, a claimant could avoid these fees simply by not filing a patent application even if the moratorium were lifted.

For many document types, BLM will establish charges on a case-by-case basis. In these situations, the applicant/operator has the opportunity to present data to BLM on the reasonableness of the fees (the Federal Land Policy and Management Act lists six factors which the BLM must consider in setting a reasonable processing fee, discussed above). If, for example, the entity is small and has a small operation, the monetary value factor may cause BLM to reduce the fee(s). When the entity is small but has large operations that are high in monetary value, it must have access to large amounts of capital and the increased fees will not have a significant detrimental effect. In any case, the entities may appeal case-by-case fees if they believe BLM is being unreasonable in its calculations.

*Unfunded Mandates Reform Act*

This proposed rulemaking will not result in any unfunded mandate to state, local, or tribal governments in the aggregate, or to the private sector, of $100 million or more in any one year.

*Executive Order 13132*

In accordance with Executive Order 13132, the proposed rule does not have significant effects on federalism, and therefore a federalism assessment is not required. The proposed rule does not change the role or responsibilities between Federal, state, and local government entities. The rule does not relate to the structure and role of states and will not have direct, substantive, or significant effects on states. It may result in a slight decrease in bonus bids which BLM shares on a 50–50 basis with the states. However, the effect would be negligible over the life of a lease.

*Executive Order 12630*

The proposed rule does not represent a government action capable of interfering with constitutionally protected property rights. The rule has no bearing on property rights, but only

concerns recovery of government processing costs for actions which benefit certain entities who acquire rights and extract publicly-owned resources. Therefore, the Department of the Interior has determined that the rule would not cause a taking of private property or require further discussion of takings implications under this Executive Order.

*Executive Order 12866*

In accordance with the criteria in Executive Order 12866, the BLM has determined that this rule is not a significant regulatory action. The Office of Management and Budget (OMB) makes the final determination under Executive Order 12866. BLM has determined that the rule does not meet any of the criteria for a significant regulatory action. The proposed rule will not have an annual effect on the economy of $100 million or more or adversely affect in a material way the economy, a sector of the economy, productivity, competition, jobs, the environment, public health or safety, or state, local or tribal governments or communities. This determination is based on an analysis which BLM prepared in conjunction with this proposed rule.

This rule will not create inconsistencies with other agencies' actions. This rule does not change the relationships of the onshore minerals programs with other agencies' actions. These relationships are all encompassed in agreements and memoranda of understanding that will not change with this proposed rule.

In addition, this rule will not materially affect the budgetary impact of entitlements, grants, loan programs or the rights and obligations of their recipients. However, this rule does propose to increase existing fees, and create new fees, for processing documents associated with the onshore minerals programs. This occurs as a result of recommendations by the OIG (Report Nos. 89–25 and 95–I–379) as well as the policy of the Independent Offices Appropriation Act of 1952 (IOAA), 31 U.S.C. 9701 and the Federal Land Policy and Management Act of 1976 (FLPMA), 43 U.S.C. 1734. The IOAA and section 304 of FLPMA authorize BLM to charge applicants the cost of processing documents through rulemaking; in addition, the IOAA states that these charges should cover the agency's costs for these services to the degree practicable. The OIG reports documented the budgetary impact of delaying collection of fees to reimburse agency costs and strongly admonished BLM to collect the fees proposed in this rule. Finally, this rule will not raise novel legal or policy issues. Some of the proposed rule may be controversial (e.g., increased or new fees), but the issues are not novel. Some have been tried in the past and some are currently in use by some State governments.

*Executive Order 12988*

In accordance with Executive Order 12988, BLM finds that this rule does not unduly burden the judicial system and meets the requirements of sections 3(a) and 3(b)(2) of the Order. BLM consulted with the Department of the Interior's Office of the Solicitor throughout the drafting process.

*Author*

The principal authors of this rule are Durga Rimal, Roger Haskins, and John Bebout of Solids Group, and Mary Nagel and John Broderick of Fluids Group, assisted by Christopher Fontecchio of the Regulatory Affairs Group, Bureau of Land Management, Department of the Interior, 1849 C Street, NW., Room 501L, Washington, DC 20240; Telephone: 202–452–0372, and Ken Fitzpatrick of BLM's Eastern States Office.

Dated: March 14, 2000.

**Sylvia V. Baca,**

*Assistant Secretary, Land and Minerals Management.*

**Note:** This document was received by the Office of the Federal Register on December 8, 2000.

**List of Subjects**

*43 CFR Part 3000*

Public lands-mineral resources, Reporting and recordkeeping requirements.

*43 CFR Part 3100*

Government contracts, Mineral royalties, Oil and gas exploration, Public lands-mineral resources, Reporting and recordkeeping requirements, Surety bonds.

*43 CFR Part 3110*

Government contracts, Oil and gas exploration, Public lands-mineral resources, Reporting and recordkeeping requirements.

*43 CFR Part 3120*

Government contracts, Oil and gas exploration, Public lands-mineral resources, Reporting and recordkeeping requirements.

*43 CFR Part 3130*

Alaska, Government contracts, Mineral royalties, Oil and gas exploration, Oil and gas reserves, Public lands-mineral resources, Reporting and recordkeeping requirements, Surety bonds.

*43 CFR Part 3150*

Administrative practice and procedure, Alaska, Oil and gas exploration, Public lands mineral resources, Reporting and recordkeeping requirements, Surety bonds.

*43 CFR Part 3200*

Geothermal energy, Government contracts, Mineral royalties, Public lands-mineral resources, Reporting and recordkeeping requirements, Surety bonds.

*43 CFR Part 3220*

Geothermal energy, Government contracts, Public lands-mineral resources, Reporting and recordkeeping requirements.

*43 CFR Part 3240*

Geothermal energy, Government contracts, Mineral royalties, Public lands-mineral resources, Reporting and recordkeeping requirements, Water resources.

*43 CFR Part 3470*

Coal, Government contracts, Mineral royalties, Mines, Public lands-mineral resources, Reporting and recordkeeping requirements, Surety bonds.

*43 CFR Part 3500*

Government contracts, Mineral royalties, Public lands-mineral resources, Reporting and recordkeeping requirements, Surety bonds.

*43 CFR Part 3510*

Public lands-mineral resources, Reporting and recordkeeping requirements.

*43 CFR Part 3520*

Government contracts, Public lands-mineral resources.

*43 CFR Part 3530*

Public lands-mineral resources.

*43 CFR Part 3540*

Public lands-mineral resources.

*43 CFR Part 3550*

Public lands-mineral resources.

*43 CFR Part 3560*

Government contracts, Mineral royalties, Public lands-mineral resources, Surety bonds.

*43 CFR Part 3570*

Government contracts, Mineral royalties, Mines, Public lands-mineral resources, Reporting and recordkeeping requirements, Surety bonds.

*43 CFR Part 3580*

Administrative practice and procedure, Mines, Public lands-mineral resources, Surety bonds.

*43 CFR Part 3590*

Administrative practice and procedure, Indian lands-mineral resources, Mineral royalties, Mines, Public lands-mineral resources, Reporting and recordkeeping requirements.

*43 CFR Part 3600*

Public lands-mineral resources, Reporting and recordkeeping requirements.

*43 CFR Part 3610*

Government contracts, Public lands-mineral resources, Reporting and recordkeeping requirements, Surety bonds.

*43 CFR Part 3800*

Public lands-mineral resources, Reporting and recordkeeping requirements, Surface management.

*43 CFR Part 3830*

Public lands-mineral resources, Location of Mining Claims, Reporting and recordkeeping requirements.

*43 CFR Part 3850*

Public lands-mineral resources, Assessment Work, Reporting and recordkeeping requirements.

*43 CFR Part 3860*

Mines, Public lands-mineral resources, Reporting and recordkeeping requirements.

*43 CFR Part 3870*

Public lands-mineral resources, Adverse Claims, Reporting and recordkeeping requirements.

Accordingly, for the reasons we explained in the preamble and the authorities stated below BLM proposes to amend 43 CFR Groups 3000, 3100, 3200, 3400, 3500, 3600, and 3800 as follows:

## Group 3000—Minerals Management

## PART 3000—MINERALS MANAGEMENT GENERAL

1. The authority citation for part 3000 is revised to read as follows:

**Authority:** 16 U.S.C. 3101 *et seq.*; 30 U.S.C. 181 *et seq.* and 351–359; 31 U.S.C. 483a; 40 U.S.C. 471 *et seq.*; 42 U.S.C. 6508; 43 U.S.C. 1701 *et seq.*; 30 U.S.C. 301–306; and Pub. L. 97–35, 95 Stat 357.

### Subpart 3000—General

2. A new § 3000.10 is added to read as follows:

#### § 3000.10 What do I need to know about fees in general?

(a) Fees must be included as required with documents filed under this subchapter. Fees may be statutorily-set fees, relatively nominal filing fees, or processing fees intended to reimburse BLM for its reasonable processing costs. For processing fees, BLM takes into account the factors in section 304(b) of the Federal Land Policy and Management Act (FLPMA) (43 U.S.C. 1734(b)) before deciding a fee. BLM considers the factors for each type of document when the processing fee is a fixed fee, and for each document when the fee is decided on a case-by-case basis, as explained in 43 CFR 3000.11.

(b) BLM will not accept a document that is submitted without the proper filing or processing fee amounts except for documents where the fee will be set on a case-by-case fee basis. Fees are not refundable except as provided for case-by-case fees in 43 CFR 3000.11. BLM will keep your fixed filing or processing fee as a service charge even if the document is rejected or withdrawn completely or partially.

3. A new § 3000.11 is added to read as follows:

#### § 3000.11 When and how does BLM charge me processing fees on a case-by-case basis?

(a) Fees in this subchapter are designated as either case-by-case fees or fixed fees. However, if BLM decides at any time that a document designated for a fixed fee will have a unique processing cost, such as the preparation of an Environmental Impact Statement, we may set the fee under the case-by-case procedures in this section.

(b) BLM may, in our discretion, allow you, the applicant, to do all or part of any special study according to standards we specify.

(c) For case-by-case fees BLM measures the ongoing processing cost for each individual document and considers the factors in section 304(b) of FLPMA on a case-by-case basis according to the following procedures:

(1) Before performing any case processing, we will give you an estimate of the proposed fee for reasonable processing costs after we consider the FLPMA section 304(b) factors.

(2) You may comment on the proposed fee.

(3) We will then give you the final estimate of the processing fee amount after considering your comments and any BLM-approved work you will do.

(i) If we encounter unanticipated expenses or lower processing costs than anticipated, we will re-estimate our reasonable processing costs following the procedure in paragraphs (c)(1), (c)(2), and (c)(3) of this section.

(ii) If the fee is less than BLM's actual costs, as a result of consideration of the FLPMA section 304(b) factors, we will not process the document until funding for the shortfall is available either through appropriated funds or other means. You may pay the shortfall by contributing funds, and once processing is complete we will refund any money to you that we did not spend on processing costs.

(4)(i) We will periodically estimate what our reasonable processing costs will be for a specific period and will bill you for that period. BLM will not process a document further until this bill amount is paid.

(ii) If a periodic payment turns out to be more or less than BLM's reasonable processing costs for the period, we will adjust the next billing accordingly or make a refund. Do not deduct any amount from a payment without our prior written approval.

(5) You must pay the entire fee before we will issue the final document.

(6) You may appeal BLM's estimated processing costs in accordance with 43 CFR Part 4. We will not process the document further until the appeal is resolved, in accordance with paragraph (c)(4)(i) of this section, unless you pay the fee under protest while the appeal is pending. In that case, if the appeal results in a decision that the fee was too high, we will refund the overpayment in accordance with paragraph (c)(4)(ii) of this section.

(d) Unless otherwise directed by statute, we will periodically adjust fees according to the Implicit Price Deflator for Gross Domestic Product, which is published annually by the U.S. Department of Commerce for the previous year. BLM will publish these fee changes in the **Federal Register**.

## Group 3100—Oil and Gas Leasing

## PART 3100—OIL AND GAS LEASING

4. The authority citation for part 3100 is revised to read as follows:

**Authority:** 30 U.S.C. 181 *et seq.* and 351–359; and 43 U.S.C. 1733 and 1740.

### Subpart 3105—Cooperative Conservation Provisions

5. Section 3105.6 is amended by revising the first sentence and adding a new sentence after the first sentence as follows:

**§ 3105.6 Consolidation of leases.**

BLM may approve consolidation of leases if it determines that there is sufficient justification and it is in the public interest. Each application for a consolidation of leases must include the payment of a processing fee of $335.* * *

## Subpart 3106—Transfers by Assignment, Sublease, or Otherwise

6. Section 3106.3 is revised to read as follows:

**§ 3106.3 Fees.**

Each transfer of record title or of operating rights (sublease) for each lease must include the payment of a processing fee of $70. Each request for a transfer to an heir or devisee, request for a change of name, or notification of a corporate merger under § 3106.8, must include the payment of a processing fee of $160. Each transfer of overriding royalty or payment out of production must include the payment of a processing fee of $9 for each lease to which it applies.

7. Section 3106.4–3 is amended by revising paragraph (d) to read as follows:

**§ 3106.4–3 Mass transfers.**

* * * * *

(d) Include with your mass transfer a processing fee payment of $70 for each such interest transferred for each lease.

**§ 3106.8–1 [Amended]**

8. Section 3106.8–1(a) is amended by removing the sentence ''No filing fee is required.'' and adding in its place a new sentence to read: ''Include a processing fee payment of $160 with your request to transfer lease rights.''

9. Section 3106.8–2 is amended by removing the sentence ''No filing fee is required.'' and adding in its place a new sentence to read: ''Include a processing fee payment of $160 with your notice of name change.''

**§ 3106.8–2 [Amended]**

10. Section 3106.8–3 is amended by removing the sentence ''No filing fee is required.'' and adding in its place a new sentence to read: ''Include a processing fee payment of $160 with your notification of a corporate merger.''

**§ 3106.8–3 [Amended]**

## Subpart 3107—Continuation, Extension or Renewal

**§ 3107.7 [Amended]**

11. Section 3107.7 is amended by removing the next to the last sentence and adding in its place two new sentences to read: ''The lessee must file an application to exchange a lease for a new lease, in triplicate, at the proper BLM office. The application must show full compliance by the applicant with the terms of the lease and applicable regulations, and must include the payment of a processing fee of $305.''

12. Section 3107.8–2 is revised to read as follows:

**§ 3107.8–2 Application.**

File your application to renew your lease in triplicate in the proper BLM office at least 90 days, but not more than 6 months, before your lease expires. Include a processing fee payment of $305.

## Subpart 3108—Relinquishment, Termination, Cancellation

13. Section 3108.2–2(a) is amended by revising the first sentence of paragraph (a)(3) to read as follows:

**§ 3108.2–2 Reinstatement at existing rental and royalty rates: Class I reinstatements.**

(a) * * *

(3) A petition for reinstatement, a processing fee of $60, and the required rental, including any back rental that has accrued from the date of the termination of the lease, are filed with the proper BLM office within 60 days after receipt of Notice of Termination of Lease due to late payment of rental. * * *

* * * * *

## Subpart 3109—Leasing Under Special Acts

14. Section 3109.1–2 is revised by removing the first three sentences and adding in their place the following:

**§ 3109.1–2 Application.**

No approved form is required for an application to lease oil and gas deposits underlying a right-of-way. The right-of-way owner or his/her transferee must file the application in the proper BLM office. Include a processing fee payment of $305. If the transferee files an application it must also include an executed transfer of the right to obtain a lease. * * *

## PART 3110—NONCOMPETITIVE LEASES

15. The authority citation for part 3110 is revised to read as follows:

**Authority:** 16 U.S.C. 3101 *et seq.*; 30 U.S.C. 181 *et seq.* and 351–359; 31 U.S.C. 483a; 43 U.S.C. 1701 *et seq.*; and Pub. L. 97–35, 95 Stat. 357.

## Subpart 3110—Noncompetitive Leases

16. Section 3110.4(a) is amended by revising the fourth and sixth sentences to read as follows:

**§ 3110.4 Requirements for offer.**

(a) * * * The original copy of each offer must be typed or printed plainly in ink, signed in ink and dated by the offeror or an authorized agent, and must include the payment of the first year's rental and a processing fee of $305. * * * A noncompetitive offer to lease a future interest applied for under § 3110.9 must include a processing fee payment of $305. * * *

* * * * *

## PART 3120—COMPETITIVE LEASES

17. The authority citation for part 3120 is revised to read as follows:

**Authority:** 16 U.S.C. 3101 *et seq.*; 30 U.S.C. 181 *et seq.* and 351–359; 40 U.S.C. 471 *et seq.*; 43 U.S.C. 1701 *et seq.*; and the Attorney General's Opinion of April 2, 1941 (40 Op. Attny. Gen. 41).

18. Section 3120.5–2 is amended by revising paragraph (b)(3) to read as follows:

**§ 3120.5–2 Payments required.**

* * * * *

(b) * * *

(3) A processing fee of $120 per parcel.

* * * * *

## PART 3130—OIL AND GAS LEASING; NATIONAL PETROLEUM RESERVE, ALASKA

19. The authority citation for part 3130 is revised to read as follows:

**Authority:** 42 U.S.C. 6508 and 1701 *et seq.*

20. Section 3132.3(a) is amended by revising the first sentence and adding a new sentence after the first sentence to read as follows:

**§ 3132.3 Payments.**

(a) Make payments of bonuses including deferred bonuses, first year's rental, other payments due upon lease issuance, and fees to BLM's Alaska State Office. Before we issue a lease, the highest bidder must pay a processing fee of $120 in addition to other remaining bonus and rental payments. * * *

* * * * *

## Subpart 3135—Transfers, Extensions and Consolidations

21. Section 3135.1–2(a)(2) is amended by revising the first two sentences to read as follows:

**§ 3135.1–2 Requirements for filing of transfers.**

* * * * *

(a)(1) * * *

(2) An application for approval of any instrument which the regulations

require you to file must include a processing fee payment of $70. Any document which the regulations in this part do not require you to file but which you submit for record purposes must also include a processing fee payment of $70 per lease affected. * * *

* * * * *

22. Section 3135.1–6(a) is amended by adding a sentence at the end as follows:

**§ 3135.1–6 Consolidation of leases.**

(a) * * * Include with each request for a consolidation of leases a processing fee payment of $335.

* * * * *

## PART 3150—ONSHORE OIL AND GAS GEOPHYSICAL EXPLORATION

23. The authority citation for part 3150 is revised read as follows:

**Authority:** 16 U.S.C. 3101 *et seq.*; 30 U.S.C. 181 *et seq.* and 351–359; 31 U.S.C. 483a; 42 U.S.C. 6504 and 6508; and 43 U.S.C.1701 *et seq.*

24. Section 3151.1 is amended by adding a new sentence between the second and third sentences to read as follows:

**§ 3151.1 Notice of intent to conduct oil and gas geophysical exploration operations.**

* * * BLM will charge a processing fee on a case-by-case basis as described in § 3000.11. * * *

25. Section 3152.1 is amended by removing the last sentence and adding in its place the following:

**§ 3152.1 Application for oil and gas geophysical exploration permit.**

* * * * *

The application must be submitted to the Field Office Manager of the proper BLM office. BLM will charge a processing fee on a case-by-case basis as described in § 3000.11.

**Group 3200—Geothermal Resource Leasing**

## PART 3200—GEOTHERMAL RESOURCE LEASING

26. The authority citation for part 3200 is revised to read as follows:

**Authority:** 30 U.S.C. 1001–1027; and 43 U.S.C. 1733 and 1740.

### Subpart 3204—Noncompetitive Leasing

**§ 3204.12 [Amended]**

27. Section 3204.12 is amended by revising the first sentence to read as follows:

Submit a non-refundable processing fee of $305 for each lease offer, and an advance rent in the amount of $1 per acre (or fraction of an acre). * * *

### Subpart 3205—Competitive Leasing

**§ 3205.16 [Amended]**

28. Section 3205.16(a) is amended by removing the word ''and'' in paragraph (a)(3), redesignating paragraph (a)(4) as paragraph (a)(5), and adding a new paragraph (a) (4) to read as follows:

(a) * * *

(4) The processing fee of $120; and

* * * * *

### Subpart 3210—Additional Lease Information

29. Section 3210.12 is amended by adding a new sentence at the end of the section to read as follows:

**§ 3210.12 May I consolidate leases?**

* * * You must include payment of a $335 processing fee with your request to consolidate leases.

### Subpart 3211—Fees, Rent, and Royalties

30. Section 3211.10 is amended by revising the section heading, the table heading, paragraph (b) introductory text, and entries (1) and (3), by redesignating entries (4) through (9) as entries (5) through (10) and by adding a new entry (4) to read as follows:

**§ 3211.10 What are the fees, rent, and minimum royalties for leases?**

* * * * *

(b) Use the following table to determine the fees, rents and minimum royalties owed for your lease:

FEES, RENT, AND ROYALTIES

| Type | Competitive leases | Noncompetitive leases |
|---|---|---|
| (1) Lease Application Processing fee | $120 | $305 (includes future interest leases) |
| * * * | * | * * * |
| (3) Transfer of Record Title or Operating Rights | 70 | 70 |
| (4) Transfer of Interest to Heir or Devisee, Name Change, or Notification of Corporate Merger. | 160 | 160 |

### Subpart 3213—Relinquishment, Termination, Cancellation, and Expiration.

31. Section 3213.19 is revised to read as follows:

**§ 3213.19 What must I do to have my lease reinstated?**

Send BLM a petition requesting reinstatement. Your petition must include the serial number for each lease and an explanation of why the delay in payment was justifiable, rather than due to a lack of diligence. In addition to your petition, you must also include any past rent owed, any rent which has accrued from the termination date, and a processing fee of $60.

### Subpart 3216—Transfers

32. Section 3216.14 is revised to read as follows:

**§ 3216.14 What fees and forms does a transfer require?**

With each transfer request send us the correct form, if required, and pay the transfer processing fee. When you calculate your fee, make sure it covers the full amount. For example, if you are transferring record title for three leases, submit $210 with the application. Use the following chart to determine forms and fees:

| Type of form | Specific form required? | Form No. | Number of copies | Transfer fee (per lease) |
|---|---|---|---|---|
| (a) Record Title | Yes | 3000–3 | 2 executed copies | $70 |
| (b) Operating Rights | Yes | 3000–3(a) | 2 executed copies | 70 |
| (c) Estate Transfers | No | N/A | 1 List of Leases | 160 |

| Type of form | Specific form required? | Form No. | Number of copies | Transfer fee (per lease) |
|---|---|---|---|---|
| (d) Corporate mergers | No | N/A | 1 List of Leases | 160 |
| (e) Name Changes | No | N/A | 1 List of Leases | 160 |

## PART 3470—COAL MANAGEMENT PROVISIONS AND LIMITATIONS

33. The authority citation for part 3470 is revised to read as follows:

**Authority:** 30 U.S.C. 189 and 359; and 43 U.S.C. 1733 and 1740.

## Subpart 3473—Fees, Rentals, and Royalties

### §§ 3473.2–1 and 3473.2–2 [Removed]

34. Sections 3473.2–1 and 3473.2–2 are removed and section 3473.2 is revised to read as follows:

### § 3473.2 General fee provisions.

(a) An application for a license to mine must include payment of a filing fee of $10. BLM may waive the filing fee for applications filed by relief agencies as provided in § 3440.1–1(b) of this chapter.

(b) An application for an exploration license must include payment of a filing fee of $250.

(c) An instrument of transfer of a lease or an interest in a lease must include payment of a filing fee of $50.

(d) BLM will charge applicants for a royalty rate reduction a processing fee on a case-by-case basis as described in § 3000.11.

(e) BLM will charge applicants for logical mining unit formation or modification a processing fee on a case-by-case basis as described in § 3000.11.

(f) BLM will charge the successful applicant for a competitive coal lease a processing fee on a case-by-case basis as described in § 3000.11.

(g) BLM will charge the successful applicant for modification of a coal lease a processing fee on a case-by-case basis as described in § 3000.11.

## PART 3500—LEASING OF SOLID MINERALS OTHER THAN COAL AND OIL SHALE

35. The authority citation for part 3500 continues to read as follows:

**Authority** U.S.C. 552; 30 U.S.C. 189 and 192c; 43 U.S.C. 1733 and 1740; and sec. 402, Reorganization Plan No. 3 of 1946 (5 U.S.C. appendix).

## Subpart 3500—Leasing of Solid Minerals Other Than Coal and Oil Shale: General

36. Section 3501.1(e) is revised by adding a new first sentence to read as follows:

### § 3501.1 What is the authority for this part?

* * * * *

(e) *Fees.* Section 304 of the Federal Land Policy and Management Act of 1976 (FLPMA) (43 U.S.C. 1734) authorizes the Secretary to establish reasonable filing and service fees for applications and other documents relating to the public lands. * * *

## Subpart 3504—Fees, Rental, Royalty and Bonds

37. A new § 3504.10 is added to read as follows:

### § 3504.10 What fees must I pay?

(a) *Filing fees.* Include a non-refundable filing fee of $25 with each application you submit to BLM that is not charged a processing fee as described in paragraph (b) of this section. Exploration license applications do not require a fee except as provided in part 2920 of this chapter.

(b) *Processing fees.* The following table shows processing fees for various documents.

| Document | Processing Fee |
|---|---|
| (1) Prospecting permit application | case-by-case basis as described in § 3000.11. |
| (2) Prospecting permit application amendment | $50. |
| (3) Prospecting permit extension | $80. |
| (4) Preference right lease application | case-by-case basis as described in § 3000.11. |
| (5) Successful competitive lease application | case-by-case basis as described in § 3000.11. |
| (6) Lease renewal application | $390. |
| (7) Application to waive, suspend, or reduce your rental, minimum royalty, or royalty rate. | case-by-case basis as described in § 3000.11. |
| (8) Future or fractional interest lease application | case-by-case basis as described in § 3000.11. |

38. Section 3504.12(a) is revised to read as follows:

### § 3504.12 What payments do I send to BLM and what payments do I send to MMS?

(a) *Fees and rentals.* (1) Pay all filing and processing fees, all first-year rentals, and all bonus bids for leases to the BLM State office which manages the lands you are interested in. Make your instruments payable to the Department of the Interior—Bureau of Land Management. (2) Pay all second-year and subsequent rentals and all other payments for leases to the Minerals Management Service. See 30 CFR part 218 for MMS's payment procedures.

* * * * *

## Subpart 3505—Prospecting Permits

39. Section 3505.12 is revised to read as follows:

### § 3505.12 How do I obtain a prospecting permit?

Deliver three copies of the BLM application form to the BLM office with jurisdiction over the lands you are interested in. Include the first year's rental with your application. You will also be charged a processing fee, which BLM will determine on a case-by-case basis as described in § 3000.11. For more information on fees and rentals, see subpart 3504 of this part.

40. Section 3505.30 is amended by removing the last sentence and by revising the second full sentence to read as follows:

### § 3505.30 May I amend or change my application after I file it?

* * * You must include the rental for any added lands and a processing fee of $50 with your amended application. * * *

41. Section 3505.31 is amended by revising the last sentence to read as follows:

**§ 3505.31 May I withdraw my application after I file it?**

* * * BLM will retain any fees associated with processing already performed on the application.

42. Section 3505.50 is amended by redesignating paragraphs (a), (b), and (c) as paragraphs (1), (2), and (3), respectively, redesignating the introductory text as paragraph (a), and adding paragraph (b) to read as follows:

**§ 3505.50 How will I know if BLM has approved or rejected my application?**

* * * * *

(b) If we reject your application, we will refund your rental payment. We will retain any fees associated with processing already performed on the application.

**§ 3505.51 [Removed]**

43. Section 3505.51 is removed.

44. Section 3505.64 is amended by revising the last sentence to read as follows:

**§ 3505.64 How do I apply for an extension?**

* * * Include your processing fee of $80 and the first year's rental, in accordance with §§ 3504.10, 3504.15, and 3504.16 of this part.

## Subpart 3507—Preference Right Lease Applications

45. Section 3507.16 is revised to read as follows:

**§ 3507.16 Is there a fee or payment required with my application?**

Yes. You must submit the first year's rent with your application according to the provisions in § 3504.15. BLM will also charge a processing fee on a case-by-case basis as described in § 3000.11.

## Subpart 3508—Competitive Lease Applications

46. Section 3508.21 is amended by adding a new paragraph (c) to read as follows:

**§ 3508.21 What happens if I am the successful bidder?**

* * * * *

(c) BLM will charge you a processing fee on a case-by-case basis as described in § 3000.11.

## Subpart 3509—Fractional and Future Interest Lease Applications

47. Section 3509.16 is amended by removing the second sentence and adding a new last sentence to read as follows:

**§ 3509.16 How do I apply for a future interest lease?**

* * * BLM will charge you a processing fee on a case-by-case basis as described in § 3000.11.

48. Section 3509.30 is amended by revising the last sentence to read as follows:

**§ 3509.30 May I withdraw my application for a future interest lease?**

* * * BLM will retain any fees associated with processing already performed on the application.

49. Section 3509.46 is amended by removing the second sentence and adding a new last sentence to read as follows:

**§ 3509.46 How do I apply for a fractional interest prospecting permit or lease?**

* * * BLM will charge you a processing fee on a case-by-case basis as described in § 3000.11.

50. Section 3509.51 is amended by revising the last sentence to read as follows:

**§ 3509.51 May I withdraw my application for a fractional interest prospecting permit or lease?**

* * * BLM will retain any fees associated with processing already performed on the application.

## Subpart 3511—Lease Terms and Conditions

51. Section 3511.27 is amended by revising the last sentence to read as follows:

**§ 3511.27 How do I renew my lease?**

* * * Send us three copies of your application together with the $390 processing fee and an advance rental payment of $1 per acre or fraction of an acre.

## Subpart 3513—Waiver, Suspension or Reduction of Rental and Minimum Royalties

52. Subpart 3513 is amended by adding § 3513.16 to read as follows:

**§ 3513.16 Do I have to pay a fee when I apply for a waiver, suspension, or reduction of rental, minimum royalty, production royalty, or minimum production?**

Yes, BLM will charge you a processing fee on a case-by-case basis, as described in § 3000.11.

# Group 3600—Mineral Materials Disposal

## PART 3600—MINERAL MATERIALS DISPOSAL: GENERAL

## PART 3610—SALES

53. The authority citation for part 3610 is revised to read as follows:

**Authority:** U.S.C. 601 and 602; and 43 U.S.C. 1733 and 1740.

## Subpart 3610—Mineral Material Sales

54. Section 3610.1–1 is amended by redesignating the existing text as paragraph (a) and adding paragraph (b) to read as follows:

**§ 3610.1–1 Request for sale.**

(a) * * *

(b) Each requestor for a sale, other than from a community pit or common use area, must pay a processing fee as provided in § 3610.2–1(a) or § 3610.3–4(e) before BLM awards the contract.

55. Section 3610.2–1 is amended by revising the section heading and adding at the end of paragraph (a) a new sentence to read as follows:

**§ 3610.2–1 Limitations in volume and fees.**

(a) * * * BLM will charge the purchaser a processing fee on a case-by-case basis as described in § 3000.11.

* * * * *

56. Section 3610.3–4 is amended by adding paragraph (e) to read as follows:

**§ 3610.3–4 Bid deposits.**

* * * * *

(e) BLM will charge the successful bidder a processing fee on a case-by-case basis as described in § 3000.11.

## PART 3800—MINING CLAIMS UNDER THE GENERAL MINING LAWS

## Subpart 3800—General

57. The authority citation for part 3800 is revised to read as follows:

**Authority:** 16 U.S.C. 351 and 460y–4; 30 U.S.C. 22 and 28k; 31 U.S.C. 9701; and 43 U.S.C. 1201 and 1740.

54. Part 3800 is amended by adding new subpart 3800, to read as follows:

## Subpart 3800—General

**§ 3800.5 Fees**

(a) An applicant for a plan of operations under this part must pay a processing fee on a case-by-case basis as described in § 3000.11 whenever BLM decides that approval of the plan of operations requires the preparation of an Environmental Impact Statement.

(b) An applicant for a plan of operations or a mineral patent under

this part, or a notice operator who may not conduct operations under this part until a validity examination is performed, must pay a processing fee on a case-by-case basis as described in § 3000.11 for any validity examination and report performed in connection with the application or notice.

## PART 3830—LOCATION OF MINING CLAIMS

58. The authority citation for part 3830 is revised to read as follows:

**Authority:** 16 U.S.C. 1901 and 1907; 30 U.S.C. 22, 28 and 242; 31 U.S.C. 9701; 43 U.S.C. 1201, 1740 and 1744; 50 U.S.C. Appendix 565; Pub. L. 103–23, 107 Stat. 60; and Pub. L. 103–66, 107 Stat. 405.

### Subpart 3833—Recordation of Mining Claims, Mill Sites, and Tunnel Sites and Payment of Service Charges; and Payment of Rental Fees

#### § 3833.1 Recordation of Mining Claims.

59. Section 3833.1–4 is amended by revising paragraphs (a), (c), (d), and (e) as follows:

#### § 3833.1–4 Service charges and location fees.

(a) As the applicant you must include payment of a $15 processing fee for each notice or certificate of location of a mining claim, mill site, or tunnel site filed for recordation.

(b) * * *

(c) Annual filings submitted under § 3833.2 must include payment of a $10 processing fee for each mining claim, mill site, or tunnel site. You do not have to pay a processing fee when paying a maintenance fee under § 3833.1–5 or filing a maintenance fee waiver under § 3833.1–7.

(d) For amendments to a previously recorded notice or certificate of location, you must submit a $10 processing fee for each mining claim, mill site, or tunnel site.

(e) For each transfer of interest document filed under § 3833.3, you must submit a $10 processing fee for each mining claim, mill site, or tunnel site.

* * * * *

## PART 3850—ASSESSMENT WORK

60. The authority is revised to read as follows:

**Authority:** 30 U.S.C. 22 *et seq.* and 28–28k; 50 U.S.C. Appendix 565; and Pub. L. 103–66, 107 Stat. 405.

### Subpart 3852—Deferment of Assessment Work

61. Section 3852.2 is amended by revising the last sentence of paragraph (a) as follows:

#### § 3852.2 Filing of petition for deferment, contents.

(a) * * * Each petition must include payment of a $80 processing fee.

* * * * *

## PART 3860—MINERAL PATENT APPLICATIONS

62. The authority citation for part 3860 is revised to read as follows:

**Authority:** 5 U.S.C. 22 *et seq.* and 552.

63. Part 3860 is amended by adding new subpart 3860 to read as follows:

### Subpart 3860—General

#### § 3860.1 Fees.

(a) Each mineral patent application must include payment of a $2,290 processing fee to cover BLM's preliminary application processing costs.

(b) BLM will charge a separate processing fee on a case-by-case basis as described in § 3000.11 to cover its processing costs for the mineral examination and report.

### Subpart 3862—Lode Mining Claim Patent Applications

64. Section 3862.1–2 is revised to read as follows:

#### § 3862.1–2 Fees.

An applicant for a lode mining claim patent must pay fees as described in § 3860.1 of this part.

### Subpart 3863—Placer Mining Claim Patent Applications

65. Section 3863.1 is amended by adding new paragraph (c) to read as follows:

#### § 3863.1 Placer mining claim patent applications: General.

* * * * *

(c) An applicant for a placer mining claim patent must pay fees as described in § 3860.1 of this part.

### Subpart 3864—Millsite Patents

#### § 3864.1 Millsite patents: General.

66. Section 3864.1–5 is is added to read as follows:

#### § 3864.1–5 Fees.

An applicant for a millsite patent must pay fees as described in § 3860.1 of this part.

## PART 3870—ADVERSE CLAIMS, PROTESTS, AND CONFLICTS

67. The authority citation for part 3870 is added to read as follows:

**Authority:** 30 U.S.C. 30; and 43 U.S.C. 1201 and 1457.

### Subpart 3871—Adverse Claims

68. Section 3871.1 is amended by revising paragraph (d) as follows:

#### § 3871.1 Filing of claim.

* * * * *

(d) Each adverse claim filed must include an $80 processing fee.

### Subpart 3872—Protests, Contests, and Conflicts

69. In § 3872.1 paragraph (b) is revised to read as follows:

#### § 3872.1 Protest against mineral applications.

* * * * *

(b) A protest by any party, except a Federal agency, must include payment of a $50 processing fee.

[FR Doc. 00–31748 Filed 12–14–00; 8:45 am]

BILLING CODE 4310–84–P

---

## FEDERAL COMMUNICATIONS COMMISSION

### 47 CFR Parts 1, 21, 61, 73, 74 and 76

**[OMD Docket No. 00–205; FCC 00–421]**

### Adoption of a Mandatory FCC Registration Number

**AGENCY:** Federal Communications Commission.

**ACTION:** Proposed rules.

**SUMMARY:** The Commission proposes to amend its rules to require persons and entities doing business with the agency to obtain a unique identifying number, called the FCC Registration Number (FRN), through the Commission Registration System (CORES), and to provide the number when doing business with the agency. The FRN requirement is being proposed to better manage the Commission's financial systems and comply with various statutes governing the financial management of agency accounts.

**DATES:** The agency must receive comments on or before January 16, 2001, and reply comments on or before January 29, 2001.

**FOR FURTHER INFORMATION CONTACT:** Mark A. Reger, Chief Financial Officer (202) 418–1924 (policy and technical issues); Laurence H. Schecker, Office of

General Counsel (202) 418–1720 (legal issues).

**SUPPLEMENTARY INFORMATION:**

1. By this document, the Commission proposes to amend its rules to require persons and entities doing business with the Commission to obtain a unique identifying number called the FCC Registration Number (FRN) to be obtained, or in some cases assigned, through the Commission Registration System (CORES). It will enable the Commission to better manage the financial systems of the agency and improve compliance with various statutes that govern the financial operations of the Federal government. The FRN requirement will also allow the Commission to improve the efficiency of its own processes to the benefit of the public.

2. The Commission is required in a variety of contexts to manage and collect substantial sums of money, including annual regulatory fees and application fees (47 U.S.C. 158 and 159) and civil monetary penalties (47 U.S.C. 503; 47 CFR 1.80). The Commission also auctions radio and television licenses through competitive bidding and administers the collection of payments for these licenses (47 U.S.C. 309(j)). In addition, the Commission directs the collection of mandated contributions to the Universal Service Fund (USF) and other statutory programs (47 U.S.C. 254(d); 47 CFR 54.706).

3. In operating these programs, the Commission is subject to a variety of federal statutes designed to ensure that the Government's financial management systems consistently and accurately report assets, liabilities, revenues and expenditures. *See, e.g.,* 31 U.S.C. 3512(b); 4 CFR 102.1(a) and 102.17. In particular, the Debt Collection Improvement Act of 1996 (DCIA), Public Law 104–134, 110 Stat. 1321 (1996), *codified at* 31 U.S.C. 3701, *et seq.*, sought to address congressional concerns that debts owed to the Federal government were not being properly collected. *See United States* v. *Texas,* 507 U.S. 529, 536–37 (1993) (Debt Collection Act was passed ''in order to strengthen the Government's hand in collecting its debts''). Recently, review by the Commission's Office of Inspector General (OIG) and by the General Accounting Office (GAO) revealed areas in need of improvement in the Commission's collection systems.

4. In the course of reviewing its collection activities, the Commission has already established a Revenue Accounting and Management Information System (RAMIS), an internal revenue management system that supports application and regulatory fee accounting, spectrum auction loan portfolio management, accounting for auction proceeds, accounting for enforcement actions, and other accounts receivable of the Commission. RAMIS replaces various independent financial management systems currently in use by the Commission. When developing RAMIS, it became clear that entities doing business with the Commission were identified in various ways that made unified accounting and revenue management difficult.

5. To address this problem, the Commission decided to assign a unique 10-digit identifying number called the FCC Registration Number (FRN) that will be used when doing business with the FCC. The Commission Registration System (CORES) was chosen as the mechanism to assign the FRN. CORES went on-line July 19, 2000, to permit the public to obtain FRNs on a voluntary basis. The Commission strongly recommended that the public begin using the FRN with all payments, including on applications, with regulatory fee payments, waiver petitions, auction payments, forfeiture remittances, and other payments and collections. In this proceeding, we propose to require those entities doing business with the Commission obtain an FRN and supply it on certain submissions to the Commission.

6. *The need for the FRN.* We propose to create a new subpart to Part 1 of our rules that will contain the FRN rules proposed herein, and cross-reference to the new subpart where appropriate in our rules. These proposed rules would make the use of the FRN mandatory in certain circumstances so that anyone not yet assigned an FRN or who has not yet obtained one must obtain one. These proposed rules would also address when the FRN will have to be provided with a filing. This will reduce the number of identifiers used by public entities in an effort to simplify their interaction with the Commission.

7. The reports of our own Inspector General and the GAO clearly indicated the need for a reassessment of our recordkeeping of monies collected. The collection of regulatory and application fees, auction payments, auction loan payments, and other monies due to the United States must be processed expeditiously and recorded properly. We tentatively conclude that the FRN will provide us with an improved mechanism for properly recording and tracking payments made to the Commission. The FRN will enable us to maintain the integrity and efficiency of the Commission's collection systems, correct the deficiencies identified in our accounting systems, improve customer service, and increase our efficiency. The FRN will enable us to ensure that fee payers' accounts are properly credited, resulting in fewer letters requesting confirmation of payment and making it easier for us to respond to inquiries. The FRN will enable us to assure that entities that claim to be exempt from paying fees are validly entitled to the exemption. The information entered into the CORES system will also eliminate repetitive collection of data and will enable the Commission by electronic mail to inform the public of refunds and send other informational alerts. The Commission intends to use the information to verify that entities doing business with the Commission have made proper payments, and to mail annual fee schedules and other materials.

8. While the FRN will be used with all FCC licensing and filing systems, it will not replace call signs, license numbers, certification numbers, or other numbers in authorization of service documents. Moreover, the CORES system will not replace the Commission's licensing or filing databases as a source of information about licensees. The FRN relates to the licensee, not the license, so that modification of a license does not affect the FRN or require the licensee to obtain a new FRN. However, if a license is transferred, the new license holder must have its own separate FRN.

9. *Who Must Obtain an FRN?* We propose that anyone doing business with the Commission, as that term is defined by the DCIA, 31 U.S.C. 7701(c)(2), must obtain an FRN. Thus, all businesses and individuals that file applications with the Commission—whether feeable or non-feeable—or make any payments of any type to the Commission will be required to obtain an FRN and provide it to the Commission in its filings. We note that this includes entities making contributions to the USF. The requirement applies not only to fee payers, but also to anyone filing an application who would pay a fee except for an exception in our rules or the statute, such as amateur radio operators, not-for-profit entities, and state and local governments. *See* 47 CFR 1.1114 and 1.1162. CORES registration will help us keep track of entities that claim they are exempt from paying fees. We include non-feeable items to facilitate compliance with the DCIA, which requires that anyone doing business with the federal government provide a taxpayer identifying number (TIN) to the government. *See* 31 U.S.C. 7701(c)(1). An FRN for these types of

entities will also enable us to better respond to fee inquiries from these entities. We also propose to permit counsel and representatives of entities doing business with the Commission to obtain an FRN, but seek comment on this proposal. Finally, in certain instances when we cannot reasonably expect the party to obtain an FRN, discussed below, we propose to assign one.

10. To ease the transition to CORES, we assigned FRNs to entities already in the Universal Licensing System (ULS) TIN Registration database and whose service has been converted to ULS. This procedure assigned separate FRNs to hundreds of thousands of entities. In addition, the spectrum auction loan portfolio currently uses a Customer Information File (CIF) number to collect payment data from the debtors. Each bill to the debtor refers to this number and we already request that it be included in the payment information to assure proper credit. We will be converting from this number to the FRN. Auction licenses issued through ULS will probably already have a FRN assigned during the data conversion. Those entities that do not currently have an FRN based on these conversions can obtain one from our website, by mailing FCC Form 160 to the Commission, or by sending Form 160 along with an application or payment.

11. Some foreign entities are already registered in the ULS, and will be assigned an FRN as described above. We propose that those foreign entities that have not obtained TINs will be assigned an FRN by the CORES administrator.

12. An unusual category of fees is fees collected under the Freedom of Information Act (FOIA), 5 U.S.C. 552. Our rules generally require that a FOIA requestor represent its willingness to pay applicable FOIA fees, and when the fee amount is determined a bill is issued. We receive FOIA requests from businesses and individuals, some of which regularly interact with the Commission and others that do not. We seek comment on whether FOIA requestors which have an FRN should have to provide it to the Commission when making a FOIA request, or for other FOIA requestors, whether an FRN should be assigned by the Commission upon issuance of a bill for the applicable FOIA fee. In a similar vein, we seek comment on whether due diligence requesters, who must pay research and copying fees, should have to acquire an FRN and provide it to the Commission.

13. Another unusual category is entities against which a forfeiture has been assessed. *See* 47 U.S.C. 501, *et seq.* Often these entities or individuals will have an FRN by virtue of their prior dealings with the Commission, but there may be many instances when an individual or business has not previously obtained an FRN. When we issue a notice of apparent liability (NAL) or other forfeiture-related order, we will attempt to discern the party's FRN. If the party does not have one, we will assign one and notify the party. Parties making forfeiture payments should submit the FRN of the party to whom the forfeiture was issued, regardless of whether the forfeiture is being paid directly by the subject or by counsel on behalf of a client. Similarly, parties to consent decrees involving voluntary contributions to the United States Treasury should also submit the FRN with their payments.

14. *Multiple FRN issues.* When we announced CORES, and held a forum discussing the implementation of CORES, we indicated that the system was designed to permit each entity with a separate TIN to obtain a separate FRN. We also indicated that FRNs could be obtained for as many separate business operations as an entity may require in its judgment, including a separate registration number for subsidiaries or sub-agencies, customers, or clients, even if these entities have the same TIN. In addition, an entity that has one TIN but many subdivisions that hold licenses or authorizations from the Commission may wish to have different FRNs for each subdivision. We include these proposals in this Notice.

15. We do not wish to create a situation in which one entity has obtained many FRNs, and uses a different FRN for different or even the same transaction. We are concerned that if we permit representatives or counsel to obtain and provide an FRN, we will still not know on whose behalf a payment is being made. Separate FRNs for related entities might complicate any future attempts to determine whether all related entities have paid all debts owed to the Commission. Limitations in CORES, RAMIS, and the Commission's filings systems may also require a different approach. We therefore seek comments on whether we should limit the number of FRNs that an entity may obtain, and whether we should penalize entities that abuse CORES by obtaining multiple FRNs. We also seek comment on whether we should include in our rules requirements that would address these issues, or adopt a new form that would enable us to identify and link all related entities.

16. *What is included in CORES?* The information collected by CORES includes entity name, entity type, TIN, contact address, and e-mail address. CORES is a system of records that contains identifying information about individuals and is subject to the Privacy Act. The information in CORES is for Commission use only and will not be published or distributed, although CORES has a query search that allows the general public to find the FRN, name, date and time of registration. CORES information may be shared with other governmental organizations as authorized under the DCIA and for other routine uses as described in the Privacy Act notice. CORES is designed so that TINs will not be available to the public. Accordingly, members of the general public will not be able to access CORES using TINs. Only a small number of Commission employees will have access to TIN information in conjunction with their work.

17. We will require that information provided to CORES must be kept current by the entities that secure the FRN. Changes and updates may be made to the password, name, address, contact representative name, contact address, contact telephone number and contact e-mail address on-line by visiting the FCC's web page or manually by filing FCC Form 161 (CORES Update/Change Form). The various licensing systems in use at the Commission will continue to be the source for a licensee's official mailing address on a specific license.

18. *When must the FRN be including in a filing with the Commission?* We propose that FRNs must be provided with any filings requiring payment of a fee. FCC Form 159, used in both electronic and paper filings requiring fees, has been modified to accommodate this requirement. In addition, we propose that any filing not requiring a fee but requiring a TIN under the DCIA must include an FRN. FCC Form 162 is the appropriate vehicle for providing the FRN in these instances. We also seek comment on whether we should attempt to develop a comprehensive list of items requiring the FRN, but caution that this may difficult to do.

19. We invite the public to submit in comments any questions concerning specific circumstances in which the FRN must be provided. However, we note that certain filers, such as commenters in rulemakings and members of the public and others petitioning to deny or objecting to the issuance of a Commission authorization, need not obtain or submit an FRN, even if they have one, in order to participate in the Commission proceeding. Letters, reports that do not require payment of a fee, or electronic mail communications to the Commission do not generally require an FRN. Persons

searching databases such as ULS to verify information will not require the FRN to search the database. Also, pleadings will not require an FRN so long as no fee is required.

20. We propose that counsel or other representatives that makes fee payments on behalf of one or more clients should provide their FRN and the FRN of the client or clients with the payments. Counsel and representatives should take care to ensure that when making payments on behalf of clients, they identify the client and the amount being paid, ensure that the client's FRN is included, and ensure that the FRN provided is the proper one for their client. We seek comment on this proposal. We also propose to amend section 1.221(f) of our Rules, 47 CFR 1.221(f), to require that when a written appearance that must be accompanied by a fee payment is required, counsel must provide an FRN.

21. In feeable complaint proceedings, we tentatively conclude that either the complainant (or in a multiple party complaint, the lead complainant) and the counsel on behalf of the complainants should submit their FRNs. We seek comment on whether all complainants in feeable complaint proceedings should provide their FRN.

22. *How will the FRN be reported?* The FRN will be included primarily on the FCC Form 159 that is required whenever a fee is paid. In addition, all FCC application forms will be amended either as they come up for renewal under the Paperwork Reduction Act (PRA) or if other changes are made to the paper forms to include a field for the FRN. Applications and electronic filings requiring an FRN have been or will be amended to include a field for the FRN. For non-feeable items requiring an FRN, or if there is no application form but the FRN is required, the FRN can be provided on FCC Form 162.

23. *Failure to provide the FRN.* Except as described below, we propose to reject filings that require an FRN but do not include it. We have such a standard currently for application fees (47 CFR 1.1109, 1.1112 and 1.1116), regulatory fees (47 CFR 1.1157 and 1.1164), and applications generally (47 CFR 1.764). We tentatively conclude a similar standard is required for the FRN. As discussed above, the FRN will be required on the FCC Form 159 filed with fee payments, on all application forms as amended to include the FRN, or on FCC Form 162 to accompany forms that have not yet been amended to require the FRN or applications that do not have specific forms. Our rules already address the completeness of applications. *E.g.*, 47 CFR 5.65(a); 25.112(a)(1); 25.527; 73.3564(a)(1); and 78.20(a).

24. Failure to include the FRN would render the application incomplete. We propose that when an application is filed without an FRN, we will not accept the application. The application may be re-submitted with the FRN, but we propose that the date the re-submitted application is received by the Commission or its agent will be considered the date of filing. If an application is resubmitted with the FRN after the specified deadline for filing, it will be considered late-filed and subject to appropriate action. If an application is accepted and it is later discovered that it lacks the FRN, failure to include the FRN will be deemed grounds for dismissal. Application fees may be retained as we do in other circumstances in which applications are dismissed as defective. *Compare* 47 CFR 1.1113 *with* 47 CFR 1.1108. Because application processes vary among our Bureaus, we propose to include in Part 1 Subpart W a generally applicable rule concerning the handling of filings that omit the FRN, and appropriate cross-references to this new subpart. We seek comment on whether this approach is sufficient, or whether we need to amend individual rules governing specific applications. Such comments should specifically identify which rules are believed to require amendment. We also seek comment on how to handle any auction up-front payments, down payments, or auction loan payments made without an FRN, but note that auction registration will require an FRN. We also seek comment on whether the failure of counsel or a representative to provide his or her FRN should affect the status of an application or filing.

25. The next filing of regulatory fees will occur in September 2001, and we will consider in the next rulemaking proceeding to establish regulatory fees how to handle circumstances in which the regulatory fee is paid but the FRN is not provided.

26. We seek comment on what should happen if a complainant in a feeable complaint proceeding fails to submit the FRN. We tentatively conclude that in such cases, failure to submit the FRN may result in dismissal. However, we will permit Commission staff the discretion to allow a party to correct this omission within a reasonable period of time, as determined by the staff. In the case of forfeiture proceedings and consent decrees involving voluntary contributions, we intend to retain the forfeiture payments in cases where the subject fails to provide its obtained or assigned FRN.

27. Tariff publications present unique issues. Some are filed electronically, some on paper, and still others are filed on diskette with an accompanying paper cover letter or other transmittal. *See* 47 CFR 61.13, *et seq.* (tariff publications filed electronically through ETFS); 47 CFR 61.1, *et seq.* (publications filed on paper or diskette). Regardless of how the publication is filed, the payment of the applicable fee is made separately, either electronically or by mail. In addition, there are varying notice periods for tariff publications to become effective, ranging from a maximum of 120 days to the same day. *See* 47 U.S.C. 203(b) (maximum 120 days notice); 204(a)(3) (seven or fifteen days' notice for local exchange carriers); and 226(h)(1)(A) (''changes in [informational tariff] rates, terms, or conditions shall be filed no later than the first day on which the changed rates, terms, or conditions are in effect''); 47 CFR 61.23(c) (one day's notice for non-dominant carriers). There are therefore different processing and fee payment arrangements. *See generally* 47 CFR 61.13 *et seq.*, 61.18, *et seq.*, 61.28, *et seq.*, and 61.31, *et seq.* Finally, there are limits on what actions we may take once a tariff publication has become effective. *See, e.g.*, 47 U.S.C. 204(a) (suspension and investigation of tariff publications) and 205(a) (action on unlawful tariff publications). We propose the following actions regarding the FRN and tariff publications. We propose to modify the ETFS so that a carrier authorized to use that system will be required to provide not only its regular password and login but also its assigned FRN and FRN password to gain access. Also, both the paper and electronic versions of the Form 159, which accompany fee payments, have been amended to include a field for the FRN. In addition, the FRN will be required on the cover letter or other transmittal accompanying each tariff publication. We seek comment on how we should treat tariff publications that omit a valid FRN. For example, should such publications be rejected, declared unlawful, or be subject to other action.

28. *Authority.* Section 4(i) of the Communications Act, 47 U.S.C. 154(i), authorizes the Commission ''to perform any and all acts, make such rules and regulations, and issue such orders, not inconsistent with this chapter, as may be necessary in the execution of its functions.'' *See New England Tel. & Tel. Co.* v. *FCC*, 826 F.2d 1101, 1108 (D.C. Cir. 1987) (section 4(i) serves as the Communications Act's ''necessary and proper clause''); *see also* 47 U.S.C. 303(r) (authority to prescribe rules and regulations to implement the

Communications Act). Pursuant to section 8 and 9 of the Communications Act, as amended, we have broad authority to ''prescribe appropriate rules and regulations'' in the assessment and collection of charges and fees. 47 U.S.C. 158(f) and 159(f)(1). *See also* 47 U.S.C. 309(j) (Commission is authorized to prescribe rules to implement competitive bidding for spectrum); 47 U.S.C. 254(d) (carrier contributions to USF). We believe these provisions of the Communications Act authorize us to require entities interacting with the Commission to obtain and provide the FRN to us.

29. *Paperwork Reduction Act.* We have obtained Office of Management and Budget (OMB) approval under the Paperwork Reduction Act (PRA) for the information collections related to CORES and the FRN. FCC Form 159 has been amended to include the FRN under OMB Control Number 3060–0589. FCC Form 160, the CORES Registration Form, received OMB approval under OMB Control Number 3060–0917. FCC Form 161, the CORES Update Form, received OMB approval under OMB Control Number 3060–0918. FCC Form 162, the CORES Certification Form, received OMB approval under OMB Control Number 3060–0919. Providing the FRN for non-feeable items, and a blanket request to update any other FCC forms to include the FRN, was obtained from OMB in OMB Control Number 3060–0728. As FCC forms are modified, the FRN requirement will be included when we seek OMB approval for the modifications. We may, as a result of comments received in this proceeding and our further consideration of these matters, adopt reporting or recordkeeping requirements subject to the PRA. We will seek OMB approval for such information collections at that time.

30. *Regulatory Flexibility Act.* We hereby certify, and tentatively conclude we will be able to so certify if we adopt these rules in final form, that the rules proposed in this Notice will not, if promulgated, have a significant economic impact on a substantial number of small entities. 5 U.S.C. 605(b). The rules require certain entities or individuals to obtain an FRN. A substantial number of entities doing business with the Commission automatically received their FRN by virtue of their prior registration in the ULS. We have proposed to make it extremely simple, and virtually cost-free, for anyone else to obtain an FRN. Nor do we believe the proposed rule amendments establishing penalties for failure to provide the FRN will have a significant economic impact on a substantial number of small entities. Our rules already generally provide for penalties when applications are not substantially complete. The proposed rule amendments simply conform our rules to the new FRN requirement. Therefore, the rules will not have a significant economic impact. We invite comments on this tentative conclusion.

31. *Ex Parte Matters.* This proceeding will be treated as a ''permit-but-disclose'' proceeding subject to the ''permit-but-disclose'' requirements under Section 1.1206(b) of the rules. 47 CFR 1.1206(b), as revised. Ex parte presentations are permissible if disclosed in accordance with Commission rules, except during the Sunshine Agenda period when presentations, ex parte or otherwise, are generally prohibited. Persons making oral ex parte presentations are reminded that a memorandum summarizing a presentation must contain a summary of the substance of the presentation and not merely a listing of the subjects discussed. More than a one or two sentence description of the views and arguments presented is generally required. See 47 CFR 1.1206(b)(2), as revised. Additional rules pertaining to oral and written presentations are set forth in section 1.1206(b).

32. *Comment Filing.* Comments may be filed using the Commission's Electronic Comment Filing System (ECFS) or by filing paper copies. Comments filed through ECFS may be sent as an electronic file via the Internet to <www.fcc.gov/e-file/ecfs.html>. Generally, only one copy of an electronic submission must be filed. When completing the transmittal screen, commenters should include their full name, Postal Service mailing address, and the applicable docket or rulemaking number. Parties may also submit an electronic comment by Internet e-mail. To receive filing instructions for e-mail comments, commenters should send an e-mail to <ecfs@fcc.gov>, and should include the following words in the body of the message, ''get form <your e-mail address>.'' A sample form and directions will be sent in reply. Parties who choose to file by paper must file an original and four copies of each filing. If participants want each Commissioner to receive a personal copy of their comments, an original plus nine copies must be filed. All filings must be sent to the Commission's Secretary, Magalie Roman Salas, Office of the Secretary, Federal Communications Commission, 445 12th Street, SW., Room TW–A325, Washington, DC 20554. Parties should reference MD Docket No. 00–205 in their comments.

33. All relevant and timely comments will be considered by the Commission before final action is taken in this proceeding. Comments and reply comments will be available for public inspection during regular business hours in the Reference Information Center (Room CY–A257) of the Federal Communications Commission, The Portals, 445 Twelfth Street, SW., Washington, DC 20554. Copies of comments and reply comments will also be available through the Commission's duplicating contractor, International Transcription Service, Inc. (ITS, Inc.), 1231 20th Street, NW., Washington, DC 20036, (202) 857–3800, TTY (202) 293–8810.

34. *Further Information.* Additional information concerning CORES is found in the Frequently Asked Question portion of the CORES homepage on our Internet site, located at <www.fcc.gov> and by clicking on the CORES link.

35. Pursuant to Sections 4(i), 8(f), 9(f)(1), 254(d), 303(r), and 309(j) of the Communications Act of 1934, as amended, 47 U.S.C. 154(i), 158(f), 159(f)(1), 254(d), 303(r), and 309(j), and 31 U.S.C. 7701(c)(1), this Notice of Proposed Rulemaking is hereby adopted.

36. The Commission's Consumer Information Bureau, Reference Information Center, *shall send* a copy of this Notice of Proposed Rulemaking, including the Initial Regulatory Flexibility Analysis, to the Chief Counsel for Advocacy of the Small Business Administration.

**List of Subjects**

*47 CFR Parts 1*

Administrative practice and procedure; reporting and recordkeeping requirements.

*47 CFR Parts 21, 61, 73, 74 and 76*

Reporting and recordkeeping requirements

Federal Communications Commission

**Shirley Suggs,**

*Chief, Publications Group.*

**Rule Changes**

For the reasons discussed in the preamble, the Federal Communications Commission proposed to amend 47 CFR Parts 1, 21, 61, 73, 74, and 76 as follows:

## PART 1—PRACTICE AND PROCEDURE

1. The authority citations for part 1 continue to read as follows:

**Authority:** 47 U.S.C. 151, 154(j), 155, 255, 303(r), 309.

2. Section 1.42 is amended by adding a new paragraph (c) to read as follows:

**§ 1.42 Applications, reports complaints; cross-reference.**

* * * * *

(c) Rules governing the FCC Registration Number (FRN) are contained in Subpart W of this part.

3. Section 1.77 is amended by adding a new sentence following the first sentence in the introductory text as follows:

**§ 1.77 Detailed application procedures; cross-reference.**

* * * Applicants should also refer to the Commission rules regarding the payment of statutory charges (subpart G of this part) and the use of the FCC Registration Number (FRN) (see subpart W of this part).

* * * * *

4. Section 1.221 is amended by redesignating paragraph (f) as paragraph (f)(1), designating the note as ''Note to paragraph (f)(1):'', and adding a new paragraph (f)(2) to read as follows:

**§ 1.221 Notice of hearing; appearances.**

* * * * *

(f) * * *

(2) When a fee is required to accompany a written appearance as described in paragraph (f)(1) of this section, the written appearance must also contain the appropriate FCC Registration Number (FRN) in conformance with subpart W of this part. The presiding judge may dismiss a written appearance that does not contain the FRN. The presiding judge may dismiss the applicant with prejudice for failure to prosecute if the written appearance is not resubmitted with the FRN within the original 20-day filing period.

* * * * *

5. Section 1.721 is amended by removing the word ''and'' at the end of paragraph (a)(13), and adding the word ''and'' at the end of paragraph (a)(14), and by adding a new paragraph (15) to read as follows:

**§ 1.721 Format and content of complaints.**

* * * * *

(a) * * *

(15) A FCC Registration Number is required under Part 1, Subpart W. Submission of a complaint without the appropriate FCC Registration Number as required by Part 1, subpart W may result in dismissal of the complaint. The staff may, at its discretion, require the complainant to correct the omission of the FCC Registration Number within a reasonable period of time as specified by the Commission staff.

* * * * *

6. Section 1.934 is amended by removing the word ''or'' at the end of paragraph (d)(2), and adding the word ''or'' at the end of paragraph (d)(3), and by adding a new paragraph (d)(4) to read as follows:

**§ 1.934 Defective applications and dismissal.**

* * * * *

(d) * * *

(4) The FCC Registration Number (FRN) has not been provided.

* * * * *

7. Add a new subpart W to read as follows:

## Subpart W—FCC Registration Number

Sec.

1.8001 FCC Registration Number (FRN).
1.8002 Obtaining an FRN.
1.8003 Providing the FRN in Commission filings.
1.8004 Penalty for failure to provide the FRN.

**§ 1.8001 FCC Registration Number (FRN).**

(a) The FCC Registration Number (FRN) is a 10-digit unique identifying number that is assigned to entities doing business with the Commission.

(b) The FRN is obtained through the Commission Registration System (CORES) over the Internet at the CORES link at <www.fcc.gov> or by filing FCC Form 160.

**§ 1.8002 Obtaining an FRN.**

(a) The FRN must be obtained by anyone doing business with the government as defined in 31 U.S.C. 7701(c)(2), including but not limited to

(1) Anyone required to pay statutory charges under subpart G of this part;

(2) Anyone applying for a license who is exempt from paying statutory charges under subpart G of this part, see §§ 1.1114 and 1.1162;

(3) Anyone participating in a spectrum auction;

(4) Anyone holding or obtaining a spectrum auction license or loan; and

(5) Anyone paying statutory charges on behalf of another entity or person.

(b)(1) When registering for an FRN through CORES, an entity's name, entity type, contact name and title, address, and taxpayer identifying number (TIN) must be provided. For individuals, the TIN is the social security number (SSN).

(2) Information provided when registering for an FRN must be kept current by registrants either by updating the information on-line at the CORES link at <www.fcc.gov> or by filing FCC Form 161 (CORES Update/Change Form).

(c) An FRN may be obtained separately by each subsidiary of a business, at the discretion of the business entity. Each subsidiary with a different TIN must obtain a separate FRN.

(d) An FRN may be assigned by the Commission, which will promptly notify the entity of the assigned FRN.

**§ 1.8003 Providing the FRN in Commission Filings.**

The FRN must be provided with any filings requiring the payment of statutory charges under subpart G of this Part, anyone applying for a license who is exempt from paying statutory charges under subpart G of this Part, anyone participating in a spectrum auction, making up-front payments or deposits in a spectrum auction, anyone making a payment on an auction loan, anyone making a contribution to the Universal Service Fund, and anyone paying a forfeiture.

**§ 1.8004 Penalty for Failure to Provide the FRN.**

(a) Electronic filing systems for filings that require the FRN will not accept a filing without the appropriate FRN. If a party seeks to make an electronic filing and does not have an FRN, the system will direct the party to the CORES website to obtain an FRN.

(b) Except as provided in other Commission rules, filings subject to the FRN requirement and submitted without an FRN may be returned or dismissed. A missing FRN may be corrected and the filing resubmitted. Except in feeable complaint proceedings, for purposes of determining whether the filing is timely, the date the resubmitted application is received by the Commission or its agent with the FRN will be considered the date of filing.

## PART 21—DOMESTIC PUBLIC FIXED RADIO SERVICES

8. The authority citations for part 21 continue to read as follows:

**Authority:** Secs. 1, 2, 4, 201–205, 208, 215, 218, 303, 307, 313, 403, 410, 602, 48 Stat. As amended, 1064, 1066, 1070–1073, 1076, 1077, 1080, 1082, 1083, 1094, 1098, 1102; 47 U.S.C. 151, 154, 201–205, 208, 215, 218, 303, 307, 313, 314, 403, 404, 602; 47 U.S.C. 552, 554.

9. Section 21.20 is amended by removing the word ''or'' at the end of paragraph (b)(9), and by adding the word ''or'' at the end of paragraph (b)(10), and by adding a new paragraph (b)(11) to read as follows:

**§ 21.20 Defective applications.**

* * * * *

(b) * * *

(11) The application does not contain the FCC Registration Number (FRN) as required under Part 1, Subpart W of this chapter.

* * * * *

## PART 61—TARIFFS

10. The authority citations for part 61 continue to read as follows:

**Authority:** Secs. 1, 4(I), 4(j), 201–205, and 403 of the Communications Act of 1934, as amended; 47 U.S.C. 151, 154(i), 154(j), 201–205, and 403, unless otherwise noted.

11. Section 61.1 is amended by revising paragraph (b) to read as follows:

### § 61.1 Purpose and application.

* * * * *

(b) Tariff publications filed with the Commission must conform to the rules in this part and with Commission rules regarding the payment of statutory charges (see part 1, subpart G of this chapter) and the use of FCC Registration Numbers (FRNs) (see part 1, subpart W of this chapter). Failure to comply with any provisions of these rules may be grounds for rejection of the non-complying publication, a determination that it is unlawful or other action.

* * * * *

12. Section 61.15 is amended by adding a new paragraph (a)(4) to read as follows:

### § 61.15 Letters of transmittal and cover letters.

* * * * *

(a) * * *

(4) Include the FCC Registration Number (FRN) of the carrier on whose behalf the cover letter is submitted. See part 1, subpart W of this chapter.

* * * * *

13. Section 61.21 is amended by adding a new paragraph (a)(3) to read as follows:

### § 61.21 Cover letters.

* * * * *

(a) * * *

(3) All cover letters and letters of transmittal shall include the FCC Registration Number (FRN) of the issuing carrier on whose behalf the letter is submitted. See part 1, subpart W of this chapter.

* * * * *

14. Section 61.33 is amended by removing the word ''and'' at the end of paragraph (a)(3), and adding the word ''and'' at the end of paragraph (a)(4), and by adding a new paragraph (a)(5) to read as follows:

### § 61.33 Letters of Transmittal.

(a) * * *

(5) Include the FCC Registration Number (FRN) of the carrier on whose behalf the letter is submitted. See part 1, subpart W of this chapter.

* * * * *

## PART 73—RADIO BROADCAST SERVICES

15.The authority citations for part 73 continue to read as follows:

**Authority:** 47 U.S.C. 154, 303, 334 and 336.

16. Section 73.1010 is amended by adding a new paragraph (a)(9) to read as follows:

### § 73.1010 Cross reference to rules in other parts.

(a) * * *

(9) Part 1, Subpart W of this chapter, ''FCC Registration Number''. (§§ 1.8001—1.8005.)

* * * * *

## PART 74—EXPERIMENTAL RADIO, AUXILIARY, SPECIAL BROADCAST AND OTHER PROGRAM DISTRIBUTIONAL SERVICES

17. The authority citations for part 74 continue to read as follows:

**Authority:** 47 U.S.C. 154, 303, 307, and 554.

18. Section 74.5 is amended by adding a new paragraph (a)(7) to read as follows:

### § 74.5 Cross-reference to rules in other parts.

(a) * * *

(7) Part 1, Subpart W of this chapter, ''FCC Registration Number''. (§§ 1.8001—1.8005.)

* * * * *

## PART 76—MULTICHANNEL VIDEO AND CABLE TELEVISION SERVICE

19. The authority citations in part 76 continue to read as follows:

**Authority:** 47 U.S.C. 151, 152, 153, 154, 301, 302, 303, 303a, 307, 308, 309, 312, 317, 325, 503, 521, 522, 531, 532, 534, 535, 536, 537, 543, 544, 544a, 545, 548, 549, 552, 554, 556, 558, 560, 561, 571, 572, 573.

20. Section 76.1610 amended by adding a new paragraph (f) to read as follows:

### § 76.1610 Change of operational information.

* * * * *

(f) The operator's FCC Registration Number (FRN) as required under part 1, subpart W of this chapter.

* * * * *

[FR Doc. 00–31722 Filed 12–14–00; 8:45 am]

BILLING CODE 6712–01–P

## DEPARTMENT OF TRANSPORTATION

## National Highway Traffic Safety Administration

## 49 CFR Part 571

**[Docket No. NHTSA–00–8248]**

**RIN No. 2127–AF36**

## Federal Motor Vehicle Safety Standards; Fuel System Integrity

**AGENCY:** National Highway Traffic Safety Administration (NHTSA), DOT.

**ACTION:** Extension of comment period.

**SUMMARY:** This document grants a request to extend the comment period on an agency proposal to amend the rear and side impact test procedures specified in the federal motor vehicle safety standard on fuel system integrity. The proposed amendment would replace the current test requiring the rear of the test vehicle to be impacted by a flat, rigid barrier at 48 kilometers per hour (30 miles per hour) with a test requiring only a portion of the rear of the test vehicle to be impacted by a lighter, deformable barrier at 80 km/h (50 mph). The proposal also would specify that the test procedure used in the standard on side impact protection be used for the standard on fuel system integrity. The agency is extending the comment period an additional 30 days.

**DATES:** Comments on the November 13, 2000 proposal, 65 FR 67693, Docket No. NHTSA–00–8248, must be received by the agency on or before the close of business on February 12, 2001.

**ADDRESSES:** You should mention the docket number of this document in your comments and submit your comments in writing to: Docket Management, Room PL–401, 400 Seventh Street, SW., Washington, DC 20590. Alternatively, you may submit your comments electronically via e-mail at *http://dms.dot.gov.*

You may call the Docket at 202–366–9324 and visit it from 10:00 a.m. to 5:00 p.m., Monday through Friday.

**FOR FURTHER INFORMATION CONTACT:** For non-legal issues, you may call Dr. William J. J. Liu, Office of Vehicle Safety Standards, (Telephone 202–366–2264) (FAX 202–366–4329).

For legal issues, you may call Mr. Dion Casey, NCC–20, Rulemaking Division, Office of Chief Counsel, (Telephone 202–366–2992) (FAX 202–366–3820).

You may send mail to both of these officials at National Highway Traffic Safety Administration, 400 Seventh Street, SW, Washington, DC 20590.

**SUPPLEMENTARY INFORMATION:** On November 13, 2000, NHTSA published a notice of proposed rulemaking (NPRM) proposing to amend the rear impact test in Standard No. 301, Fuel System Integrity. The current test procedure requires the entire rear of the vehicle to be impacted by a flat, rigid barrier at speeds up to 48 km/h (30 mph). Under the proposal, NHTSA would replace that full rear impact test procedure with an offset rear impact test procedure requiring only a portion of the rear of the vehicle to be impacted with a lighter, deformable barrier at 80 km/h (50 mph). The agency has tentatively concluded that the new, more stringent test procedure will save lives and prevent injuries.

In the NPRM, the agency also proposed to change Standard No. 301's procedure for side impact tests. Currently, the standard specifies a side impact test procedure that differs from the test procedure in our standard on side impact protection (Standard No. 214, Side Impact Protection). Under the proposal, NHTSA would specify that the test procedure in Standard No. 214 be used for Standard No. 301 as well. The agency has tentatively concluded that this change will provide a more realistic test, increase safety, and reduce testing costs.

The NPRM specified a comment closing date of January 12, 2001 (60 days after the date of publication). However, on December 8, 2000, the agency received a request for an extension of the comment closing date from the Alliance of Automobile Manufacturers (Alliance). The Alliance stated that it wishes to provide comments on the proposal, but will be unable to do so in a timely fashion due to the complexity of the issues involved and the traditional holiday shutdowns in the U.S., Europe, and Japan. Specifically, the Alliance requests additional time to allow its members to conduct testing and gather data so that the Alliance may respond more fully to the proposal.

The agency may grant a person's petition for an extension of a comment period if the petition shows good cause for the extension, and if the extension is consistent with the public interest. 49 CFR 553.19. The agency concludes that the petitioner has made that showing and that an extension is in the public interest. An extension would aid the Alliance and other interested parties in fully responding to the proposed changes to Standard No. 301. Accordingly, this notice extends the comment closing date to February 12, 2001.

**Authority:** 49 U.S.C. 322, 30111, 30115, 30117, and 30166; delegation of authority is at 49 CFR 1.50 and 49 CFR 501.8.

Issued on: December 12, 2000.

**Stephen R. Kratzke,**

*Associate Administrator for Safety Performance Standards.*

[FR Doc. 00–31976 Filed 12–14–00; 8:45 am]

BILLING CODE 4910–59–P

# Notices

Federal Register
Vol. 65, No. 242
Friday, December 15, 2000

This section of the FEDERAL REGISTER contains documents other than rules or proposed rules that are applicable to the public. Notices of hearings and investigations, committee meetings, agency decisions and rulings, delegations of authority, filing of petitions and applications and agency statements of organization and functions are examples of documents appearing in this section.

## DEPARTMENT OF AGRICULTURE

### Agricultural Research Service

### Notice of Intent to Grant Exclusive License

**AGENCY:** Agricultural Research Service, USDA.

**ACTION:** Notice of intent.

**SUMMARY:** Notice is hereby given that the U.S. Department of Agriculture, Agricultural Research Service, intends to grant to Scenturion, Inc., of Clinton, Washington, an exclusive license to U.S. Patent Application Serial No. 09/156,348 filed September 18,1998, entitled, ''Chemical Attractants for Moths.'' Notice of Availability was published in the **Federal Register** on November 3, 1999.

**DATES:** (**Federal Register**) Comments must be received on or before February 13, 2001.

**ADDRESSES:** Send comments to: USDA, ARS, Office of Technology Transfer, 5601 Sunnyside Avenue, Room 4–1158; Beltsville, Maryland 20705–5131.

**FOR FURTHER INFORMATION CONTACT:** June Blalock of the Office of Technology Transfer at the Beltsville address given above; telephone: 301–504–5989.

**SUPPLEMENTARY INFORMATION:** The Federal Government's patent rights to this invention are assigned to the United States of America, as represented by the Secretary of Agriculture. It is in the public interest to so license this invention as Scenturion, Inc., has submitted a complete and sufficient application for a license. The prospective exclusive license will be royalty-bearing and will comply with the terms and conditions of 35 U.S.C. 209 and 37 CFR 404.7. The prospective exclusive license may be granted unless, within sixty (60) days from the date of this published Notice, the Agricultural Research Service receives written evidence and argument which establishes that the grant of the license would not be consistent with the requirements of 35 U.S.C. 209 and 37 CFR 404.7.

**Richard M. Parry, Jr.,**
*Assistant Administrator.*

[FR Doc. 00–31963 Filed 12–14–00; 8:45 am]

BILLING CODE 3410–03–P

## DEPARTMENT OF AGRICULTURE

### Commodity Credit Corporation

### Notice of Request for Reinstatement of a Previously Approved Information Collection

**AGENCY:** Commodity Credit Corporation, USDA.

**ACTION:** Notice and request for comments.

**SUMMARY:** In accordance with the Paperwork Reduction Act, this notice announces the Commodity Credit Corporation's (CCC) intention to request a reinstatement of a previously approved information collection under the Sugar Program. The Sugar Program is authorized by Section 156 of the 1996 Federal Agriculture Improvement and Reform Act of 1996 (the 1996 Act) and implemented by regulations issued by CCC. Paragraph 156(h)(1) of the 1996 Act requires cane sugar refiners, sugar beet processors, and sugarcane processors to ''furnish the Secretary, on a monthly basis, such information as the Secretary may require to administer sugar programs, including the quantity of purchases of sugarcane, sugar beets, and sugar, and production, importation, distribution, and stock levels of sugar.''

**DATES:** Comments on this notice must be received by February 13, 2001 to be assured of consideration.

**ADDITIONAL INFORMATION OR COMMENTS:** Contact Thomas W. Bickerton, Economic Policy Analysis Staff (EPAS), Farm Service Agency (FSA), U.S. Department of Agriculture (USDA), STOP 0516, 1400 Independence Avenue, SW, Washington, DC 20250–0516; e-mail thomas__bickerton@wdc.fsa.usda.gov.

**SUPPLEMENTARY INFORMATION:**

*Title:* Sugar Program.

*OMB Control Number:* 0560–0138.

*Type of Request:* Reinstatement of a previously approved collection.

*Abstract:* The information which will be collected under OMB control number 0560–0138 will allow CCC to effectively administer the Sugar Program authorized and mandated by Section 156 of the 1996 Act. The 1996 Act requires USDA to collect and publish, on a monthly basis, information as the Secretary may require to administer sugar programs, including sales of sugarcane, sugar beets, and sugar, and production, importation, distribution, and stock levels of sugar. This legal requirement to publish monthly data could not be satisfied with less frequent collections.

FSA uses these data to estimate supply and use for the monthly *World Agricultural Supply and Demand Estimates* report; publish the monthly *Sweetener Market Data* report; establish regional sugar loan rates; make appropriate adjustments in loan rates for raw and beet sugar for differences in grade, type, quality, and other factors; and estimate the impact of alternative sugar policy options on the sugar market. Also, these data help USDA determine the adequacy of the amount of sugars, syrups, and molasses permitted to be imported.

*Estimate of Burden:* Public reporting burden for this information collection is estimated to average 0.5554 hours per response.

*Respondents:* Cane sugar refiners, sugar beet processors, and sugarcane processors.

*Estimated Number of Respondents:* 51.

*Estimated Number of Responses per Respondent:* 17.

*Estimated Total Annual Burden on Respondents:* 18,698 hours.

*Proposed topics for comments include, but are not limited to:* (1) whether the collection of information is necessary for the proper performance of the functions of the agency, including whether the information will have practical utility; (2) the accuracy of the agency's estimate of burden including the validity of the methodology and assumptions used; (3) ways to enhance the quality, utility, and clarity of the information collected; and (4) ways to minimize the burden of the collection on those who are to respond, including the use of appropriate automated, electronic, mechanical, or other technological collection techniques or other forms of informational technology. Comments regarding this information collection requirement should be

directed to the Office of Information and Regulatory Affairs, Office of Management and Budget, Attention: Desk Officer for Agriculture, Washington, DC 20503, or to Thomas W. Bickerton; EPAS, FSA, USDA, STOP 0516, Room 3734-South Building, 1400 Independence Avenue, SW, Washington, DC 20250–0516; e-mail thomas—bickerton@wdc.fsa.usda.gov. All responses to this notice will be summarized and included in the request for OMB approval. All comments will become a matter of public record.

Signed at Washington, DC, on December 7, 2000.

**Keith Kelly,**

*Executive Vice President, Commodity Credit Corporation.*

[FR Doc. 00–31956 Filed 12–14–00; 8:45 am]

BILLING CODE 3410–05–P

## DEPARTMENT OF AGRICULTURE

### Forest Service

### Availability of an Environmental Assessment, Decision Notice, and Finding of No Significant Impact for An Amendment to the Hoosier National Forest Land and Resource Management Plan; Brown, Crawford, Jackson, Lawrence, Martin, Orange, and Perry Counties, Indiana

**AGENCY:** Forest Service, USDA.

**ACTION:** Notice of Availability of an environmental assessment.

**SUMMARY:** On November 22, 2000, Hoosier National Forest Supervisor, Kenneth G. Day (Responsible Official) decided to amend the 1991 Hoosier National Forest Land and Resource Management Plan (Forest Plan). Copies of the Environmental Assessment, Plan Amendment pages, Decision Notice, and Finding of No Significant Impact, are available upon request. This amendment modifies the boundaries of the existing Management Area 8.2 special areas, makes a decision on the final allocation of the Management Area 9.2 proposed special areas, and allocates five new areas identified since the signing of the Forest Plan for special area status. The boundaries incorporate all of the special features responsible for designating the area as a special area and provides for protection of these special features. This notice is provided pursuant to National Forest System Land and Resource Management Planning regulations (36 CFR 219.35, 65 FR 67579, November 9, 2000).

**DATES:** On November 22, 2000, Hoosier National Forest Supervisor, Kenneth G. Day (Responsible Official) decided to amend the 1991 Hoosier National Forest Land and Resource Management Plan (Forest Plan). A legal notice was published in the Sunday Herald-Times, Bloomington, Indiana newspaper in accordance with 36 CFR 217.8(a)(2) on November 26, 2000.

**ADDRESSES:** Send requests for documents to: Forest Supervisor, Hoosier National Forest, 811 Constitution Avenue, Bedord, IN 47421.

Alternatively, direct electronic mail to: ''r9 hoosier website''@fs.fed.us ATTN: Plan Amendment.

**FOR FURTHER INFORMATION CONTACT:** Regis Terney, Forest Planner, at 812–275–5987. TDD 812–275–7817; or direct electronic mail to: ''r9 hoosier website''@fs.fed.us, or access the forest web page at www.fs.fed.us/r9/hoosier.

*Responsible Official:* Kenneth G. Day, Forest Supervisor, 811 Constitution Avenue, Bedford, Indiana, 47421.

**SUPPLEMENTARY INFORMATION:** These special areas are located throughout the Hoosier National Forest on about 17,500 acres of National Forest System land. The boundaries incorporate all of the special features responsible for designating the area as a special area and provides for protection of these special features. Boundaries are designed to be easily recognizable by using physical features on the ground such as roads, ridges, and creeks. This is a non-significant amendment.

Public involvement was an important part of the decision making process for this proposal. On November 6, 1997, we started scoping with mailing of letters to interested parties and the mailing of a news release to newspaper, television, and radio news organizations. We requested that people send their comments on the scoping proposal to our office by December 6, 1997. A second round of public involvement occurred with the issuance of the pre-decisional environmental assessment on February 27, 2000. We published a legal notice notifying the public of the availability of the EA for review in the Sunday Herald-Times, Bloomington, Indiana on February 27, 2000, and the Perry County News, Tell City, Indiana on February 28, 2000. A 30-day formal comment period followed release of the predecisional EA on February 27, 2000 for review (until March 28, 2000).

This decision is subject to appeal pursuant to USDA Forest Service regulations 36 CFR 217.3. Any written appeal must be postmarked or submitted to the Regional Forester, USDA Forest Service, Eastern Region, 310 West Wisconsin Ave., Suite 500, Milwaukee, WI 53203, within 45 days of the date of the legal notice was published in the Sunday Herald-Times, Bloomington, Indiana in accordance with 36 CFR 217.8(a)(2). The appeal period begins the day following the legal notice publication in the Sunday Herald-Times. Appeals must meet the content requirements of 36 CFR 217.9. The Forest Service is an equal opportunity organization.

Dated: December 7, 2000.

**Kenneth G. Day,**

*Forest Supervisor.*

[FR Doc. 00–31983 Filed 12–14–00; 8:45 am]

BILLING CODE 3410–11–M

## DEPARTMENT OF AGRICULTURE

### Forest Service

### Southwestern Region, Arizona, New Mexico, West Texas and Oklahoma; Proposed Projects in the Invasive Plant Analysis Area, Carson National Forest, Portions of Rio Arriba, Mora, Taos, and Colfax Counties; Santa Fe National Forest, Portions of Rio Arriba, Los Alamos, Sandoval, San Miquel, and Mora Counties, New Mexico

**AGENCY:** Forest Service, USDA.

**ACTION:** Notice of intent (NOI) to prepare an environmental impact statement.

**SUMMARY:** The Carson National Forest, and Santa Fe National Forest will prepare a joint environmental impact statement (EIS) to analyze information relevant to reduce and control existing populations of invasive plants within the boundaries of the two national forests. Proposed projects can be accomplished using one, or a combination of methods including mechanical, herbicidal, biological, and cultural treatments.

**DATES:** It is estimated that the draft environmental Impact statement (DEIS) will be completed and distributed by the end of March 2001. A 45 day comment period will follow issuance of the DEIS. The final environmental impact statement is estimated to be released in June 2001.

**ADDRESSES:** The draft environmental impact statement (DEIS) will be available upon request from the Carson Forest Supervisor's Office, 208 Cruz Alta Road, Taos, NM 87571, Attn: Range and Wildlife; or Santa Fe Forest Supervisor's Office, 1471 Rodeo Road, P.O. Box 1689, Santa Fe, NM 87504–1689, Attn: Range and Wildlife. Comments related to this NOI can be sent to the contractor Mike, Tremble, Ecosystem Management Inc., 4004 Carlisle Blvd., NE, Suite C1, Albuquerque, New Mexico 87107; or via e-mail at *mtremble@nmia.com.*

*Responsible Official:* The Forest Supervisor, Carson National Forest, is the responsible official and will decide whether or not projects will be implemented by the Forest Service in the Carson National Forest; The Forest Supervisor, Santa Fe National Forest, is the responsible official and will decide whether or not projects will be implemented by the Forest Service in the Santa Fe National Forest. The Forest Supervisor of each National Forest will decide what projects and where, how and when they will be implemented.

**FOR FURTHER INFORMATION CONTACT:** Resource Staff Officer (Project Leader), Charles Jankiewicz, Santa Fe National Forest, 505–438–7820, or Daniel Rael, Carson National Forest, 505–758–6200.

**SUPPLEMENTARY INFORMATION:**

*Location:* The analysis area is the two national forests, Carson, and Santa Fe, lying predominantly in the Sange de Cristo, the Jemez, and the Tusas mountains all in central to north central New Mexico.

*Purpose:* The purpose of treating the invasive plant infestations within the boundaries of the Carson, and Santa Fe National Forests is to reduce the likelihood of ecological change from native plant species to introduced plant species, noxious, or detrimental to native plant communities, wildlife species, and domestic livestock.

**Decisions To Be Made**

*The Decisions To Be Made Are*

- Whether areas should be allocated to no treatment of invasive weeds (plants). If so, where and how much?
- Whether areas should be treated to reduce and control invasive weeds (plants). If so, where and how much?
- Whether one, or a combination of methods should be used, including mechanical, herbicidal, biological, or cultural treatments should be used. If so, where and how much should be treated.

**Supplemental Information for Public Participation**

Comments received in response to this NOI, including names and addresses of those who comment, will be considered part of the public record and will be available for public inspection. Comments submitted anonymously will be accepted and considered; however, those who submit anonymous comments will not have standing to appeal the subsequent decisions under 36 CFR parts 215 or 217. Additionally, pursuant to 7 CFR 1.23(d), any person may request the agency to withhold a submission from the public record by showing how the Freedom of Information Act (FOIA) permits such confidentiality. Persons requesting such confidentiality should be aware that, under the FOIA; confidentiality may be granted in only very limited circumstances such as to protect trade secrets. The Forest Service will inform the requester of the agency's decision regarding the request for confidentiality, and where the request is denied, the agency will return the submission and notify the requester that the comment may be resubmitted with or without name and address within 10 days.

Dated: December 8, 2000.

**Steve Okamoto,**

*Acting Forest Supervisor, Carson National Forest.*

**Dolores Maese,**

*Acting Forest Supervisor, Santa Fe National Forest.*

[FR Doc. 00–31952 Filed 12–14–00; 8:45 am]

BILLING CODE 3410–11–P

---

## DEPARTMENT OF AGRICULTURE

## Forest Service

## Griffin Springs Resource Management Project, Dixie National Forest, Garfield County, Utah

**AGENCY:** Forest Service, USDA.

**ACTION:** Revised Notice of Intent (NOI) to prepare an Environmental Impact Statement. (The original Notice of Intent was published on November 16, 1998 and a revised NOI changing the project name from Aquarius Ecosystem Restoration Project (AERP) to Griffin Springs Resource Management Project (GSRMP) was published on July 26, 1999.) Comments originally collected under the NOI for the Aquarius Ecosystem Restoration Project will be used for the Griffin Springs Resource Management Project.

**SUMMARY:** The Dixie National Forest, Garfield County, Utah, announced November 16, 1998, its intent to prepare an Environmental Impact Statement (EIS) that would analyze management proposals within the Aquarius Ecosystem Restoration Project. Because a portion of the area was affected by 36 CFR part 212, Administration of the Forest Development Transportation System: Temporary Suspension of Road Construction and Reconstruction in Unroaded Areas, and there are existing roadless areas within the project area, the project area was divided into smaller decision blocks. A Revised NOI for the Griffin Springs Resource Management Project was published in the Federal Register on July 26, 1999. Comments received during the AERP scoping period or in response to the original or revised NOI will be addressed in the GSRMP analysis. Since the revised NOI was published the GSRMP proposed actions and analysis area have been changed. The southern portion of the analysis area located on Barney Top has also been made a separate decision block, and the analysis area has been expanded to include an adjacent area located in section 8, T33S; R1E; SLBM that is experiencing tree mortality from bark beetles. The Proposed Action now includes sanitation and salvage harvesting that would remove spruce beetle infested trees and recently killed trees on 714 acres. Implementation of the GSRMP would not require new road construction.

The proposed action no longer includes construction of a trailhead for the Powell Point trail (#6.0) at the junction of the Powell Point non-motorized trail and the end of FS road (#1516), construction of a trailhead for the Gap trail (#1.51) at the end of Forest road (#1370), construction of a trailhead at Clayton Guard Station to serve Grass Lakes (#1.61), Pacer Lake (#4.0), Poison Creek (#3.0) and Antimony Lake (#2.0) motorized trails, or construction of a trailhead for the North Creek lakes non-motorized trail (#1.5). The previously proposed trailhead construction at the above locations included, parking areas, signs and an information kiosk. The proposed parking area at the end of the road #0176 at Row Lakes has also been dropped.

Travel management proposals have also been eliminated. Previously, travel management proposals within the AERP project area included: the closing of 16.3 miles of existing roads with physical barriers and obliteration; and the re-vegetation of 54.6 miles of existing roads.

A portion of the prescribed burning located in sections 10 and 15; T34S; R1W; SLBM has also been dropped. This proposal would have regenerated approximately 200 acres of aspen within the spruce/fir type, with a stand replacing prescribed fire.

An updated scoping notice is available at the office listed below. the DEIS is expected to be available for review by March 2001.

**FOR FURTHER INFORMATION CONTACT:** Cindy Calbaum, Interdisciplinary Team Leader, (435) 826–5400, Escalante Ranger District, PO Box 246, Escalante, Utah 84726.

Dated: December 6, 2000.

**Mary Wagner,**

*Forest Supervisor.*

[FR Doc. 00–31982 Filed 12–14–00; 8:45 am]

BILLING CODE 3410–11–M

## COMMITTEE FOR PURCHASE FROM PEOPLE WHO ARE BLIND OR SEVERELY DISABLED

### Procurement List Additions and Deletions

**AGENCY:** Committee for Purchase From People Who Are Blind or Severely Disabled.

**ACTION:** Proposed additions to and deletions from the procurement list.

**SUMMARY:** The Committee is proposing to add to the Procurement List services to be furnished by nonprofit agencies employing persons who are blind or have other severe disabilities, and to delete commodity previously furnished by such agencies.

**COMMENTS MUST BE RECEIVED ON OR BEFORE:** January 15, 2001.

**ADDRESS:** Committee for Purchase From People Who Are Blind or Severely Disabled, Jefferson Plaza 3, Suite 10800, 1421 Jefferson Davis Highway, Arlington, Virginia 22202–3259.

**FOR FURTHER INFORMATION CONTACT:** Louis R. Bartalot (703) 603–7740.

**SUPPLEMENTARY INFORMATION:** This notice is published pursuant to 41 U.S.C. 47(a)(2) and 41 CFR 51–2.3. Its purpose is to provide interested persons an opportunity to submit comments on the possible impact of the proposed actions.

### Additions

If the Committee approves the proposed addition, all entities of the Federal Government (except as otherwise indicated) will be required to procure the services listed below from nonprofit agencies employing persons who are blind or have other severe disabilities.

I certify that the following action will not have a significant impact on a substantial number of small entities. The major factors considered for this certification were:

1. The action will not result in any additional reporting, recordkeeping or other compliance requirements for small entities other than the small organizations that will furnish the services to the Government.

2. The action will result in authorizing small entities to furnish the services to the Government.

3. There are no known regulatory alternatives which would accomplish the objectives of the Javits-Wagner-O'Day Act (41 U.S.C. 46—48c) in connection with the services proposed for addition to the Procurement List.

Comments on this certification are invited. Commenters should identify the statement(s) underlying the certification on which they are providing additional information. The following services have been proposed for addition to Procurement List for production by the nonprofit agencies listed:

### Services

Janitorial/Custodial

Naval & Marine Corps Reserve Center, Peoria, Illinois

NPA: Community Workshop & Training Center, Peoria, Illinois

Naval & Marine Corps Reserve Center, Lehigh Valley, Pennsylvania

NPA: Via of the Lehigh Valley, Inc., Bethlehem, Pennsylvania

Mailroom Operation, McCoy Federal Building, Jackson, Mississippi

NPA: Mississippi Industries for the Blind, Jackson, Mississippi

Uniform Rental Service, National Institute of Health, Bethesda, Maryland

NPA: Rappahannock Goodwill Industries, Inc., Fredericksburg, Virginia

### Deletions

I certify that the following action will not have a significant impact on a substantial number of small entities. The major factors considered for this certification were:

1. The action will not result in any additional reporting, recordkeeping or other compliance requirements for small entities.

2. The action will result in authorizing small entities to furnish the commodity to the Government.

3. There are no known regulatory alternatives which would accomplish the objectives of the Javits-Wagner-O'Day Act (41 U.S.C. 46–48c) in connection with the commodity proposed for deletion from the Procurement List.

The following commodity has been proposed for deletion from the Procurement List:

### Commodity

Floorboard, Wood, 2510–01–067–2630.

**Louis R. Bartalot,**

*Deputy Director (Operations).*

[FR Doc. 00–31986 Filed 12–14–00; 8:45 am]

BILLING CODE 6353–01–P

## COMMITTEE FOR PURCHASE FROM PEOPLE WHO ARE BLIND OR SEVERELY DISABLED

### Procurement List; Additions and Deletions

**AGENCY:** Committee for Purchase From People Who Are Blind or Severely Disabled.

**ACTION:** Additions to and Deletions from the Procurement List.

**SUMMARY:** This action adds to the Procurement List services to be furnished by nonprofit agencies employing persons who are blind or have other severe disabilities, and deletes from the Procurement List commodities previously furnished by such agencies.

**EFFECTIVE DATE:** January 15, 2001.

**ADDRESSES:** Committee for Purchase From People Who Are Blind or Severely Disabled, Jefferson Plaza 2, Suite 10800, 1421 Jefferson Davis Highway, Arlington, Virginia 22202–3259.

**FOR FURTHER INFORMATION CONTACT:** Louis R. Bartalot (703) 603–7740.

**SUPPLEMENTARY INFORMATION:** On June 9, October 20 and October 27, 2000, the Committee for Purchase From People Who Are Blind or Severely Disabled published notices (65 FR 36663, 63057 and 64420) of proposed additions to and deletions from the Procurement List:

### Additions

After consideration of the material presented to it concerning capability of qualified nonprofit agencies to provide the services and impact of the additions on the current or most recent contractors, the Committee has determined that the services listed below are suitable for procurement by the Federal Government under 41 U.S.C. 46–48c and 41 CFR 51–2.4.

I certify that the following action will not have a significant impact on a substantial number of small entities. The major factors considered for this certification were:

1. The action will not result in any additional reporting, recordkeeping or other compliance requirements for small entities other than the small organizations that will furnish the services to the Government.

2. The action will not have a severe economic impact on current contractors for the services.

3. The action will result in authorizing small entities to furnish the services to the Government.

4. There are no known regulatory alternatives which would accomplish the objectives of the Javits-Wagner-O'Day Act (41 U.S.C. 46–48c) in

connection with the services proposed for addition to the Procurement List.

Accordingly, the following services are hereby added to the Procurement List:

*Services*

*Administrative Services*

General Services Administration, Public Building Service, Property Development Division, 230 S. Dearborn Street, Chicago, Illinois

*Administrative Services*

U.S. Department of Commerce, National Weather Service NOAA, National Reconditioning Center, Kansas City, Missouri,
Eyewear Prescription Service, VA Outpatient Clinic, Port Richey, Florida
General Records Management Support, Corpus Christi Army Depot, Corpus Christi, Texas
Grounds Maintenance, Fort McPherson, Fort McPherson, Georgia
Janitorial/Custodial, Ford House Office Building, Washington, DC
Medical Transcription, Federal Bureau of Prisons, Federal Medical Center, Lexington, Kentucky
Temporary Administrative General Support Services, National Institute of Health, Bethesda, Maryland

This action does not affect current contracts awarded prior to the effective date of this addition or options that may be exercised under those contracts.

**Deletions**

I certify that the following action will not have a significant impact on a substantial number of small entities. The major factors considered for this certification were:

1. The action will not result in any additional reporting, recordkeeping or other compliance requirements for small entities.
2. The action will not have a severe economic impact on future contractors for the commodities.
3. The action will result in authorizing small entities to furnish the commodities to the Government.
4. There are no known regulatory alternatives which would accomplish the objectives of the Javits-Wagner-O'Day Act (41 U.S.C. 46–48c) in connection with the commodities deleted from the Procurement List.

After consideration of the relevant matter presented, the Committee has determined that the commodities listed below are no longer suitable for procurement by the Federal Government under 41 U.S.C. 46–48 and 51 CFR 41–2.4. Accordingly, the following commodities are hereby deleted from the Procurement List:

*Commodities*

Arming Wire
1350–00–889–8165
Arming Wire Assembly
1325–01–155–9965
1325–01–264–5465
1325–00–947–6698
Cleaning Compound
7930–01–398–0945
Detergent, General Purpose
7930–01–393–6761
Enamel
8010–01–332–3739
Stepladder
5440–00–227–1593
5440–00–171–9836
5440–00–227–1594
5440–00–227–1596
5440–00–227–1595
5440–00–227–1592
Stepladder, Fiberglass
5440–01–415–1238
5440–01–415–1240
5440–01–415–1241

**Louis R. Bartalot,**

*Deputy Director (Operations).*

[FR Doc. 00–31987 Filed 12–14–00; 8:45 am]

BILLING CODE 6353–01–M

## DEPARTMENT OF COMMERCE

### International Trade Administration

**[A–122–823, A–428–814, C–428–817, A–580–815, C–580–818, A–421–804, C–401–401]**

### Revocation of Antidumping and Countervailing Duty Orders on Certain Carbon Steel Products From Canada, Germany, Korea, the Netherlands, and Sweden

**AGENCY:** Import Administration, International Trade Administration, Department of Commerce.

**ACTION:** Notice of Revocation of Antidumping and Countervailing Duty Orders on Certain Carbon Steel Products from Canada, Germany, Korea, the Netherlands, and Sweden.

**SUMMARY:** Pursuant to section 751(c) of the Tariff Act of 1930, as amended (''the Act''), the United States International Trade Commission (''the Commission'') determined that revocation of the following antidumping and countervailing duty orders on certain carbon steel products from Canada (A–122–823), Germany (A–428–814, C–428–817), Korea (A–580–815, C–580–818), the Netherlands (A–421–804), and Sweden (C–401–401), is not likely to lead to continuation or recurrence of material injury to an industry in the United States within a reasonably foreseeable time. See 65 FR 75301 (December 1, 2000). Therefore, pursuant to section 751(d)(2) of the Act and 19 CFR 351.222(i)(1), the Department of Commerce (''the Department'') is revoking the following antidumping and countervailing duty orders:

| Product | Country | ITA Case No. |
|---|---|---|
| Cut-to-Length | Canada | A-122-823 |
| Cold-Rolled | Germany | C-428-817 |
| Cold-Rolled | Germany | A-428-814 |
| Cold-Rolled | South Korea | A-580-815 |
| Cold-Rolled | South Korea | C-580-818 |
| Cold-Rolled | Netherlands | A-421-804 |
| Cold-Rolled | Sweden | C-401-401 |

Pursuant to section 751(c)(6)(A)(iv) of the Act and 19 CFR 351.222(i)(2), the effective date of revocation is January 1, 2000.

**EFFECTIVE DATE:** January 1, 2000.

**FOR FURTHER INFORMATION CONTACT:** Martha V. Douthit or James P. Maeder, Office of Policy for International Trade Administration, US Department of Commerce, 14th Street and Constitution Ave., NW, Washington, DC 20230; telephone: (202) 482–5050 or (202) 482–3330, respectively.

**SUPPLEMENTARY INFORMATION:**

**Background**

On September 1, 1999, the Department initiated (64 FR 47767), and the Commission instituted, (64 FR 47862) sunset reviews of the antidumping and countervailing duty orders on certain carbon steel products from Australia, Belgium, Brazil, Canada, Finland, France, Germany, Japan, Korea, Mexico, Netherlands, Poland, Romania, Spain, Sweden, Taiwan, and the United Kingdom, pursuant to section 751(c) of the Act. As a result of its reviews, the Department found that revocation of the following antidumping and countervailing duty orders on certain carbon steel products would likely lead to continuation or recurrence of dumping and/or subsidization, and notified the Commission of the magnitude of the margins likely to prevail were the orders revoked:

| Product | Country | ITA Case No. | Federal Register citation | Date |
|---|---|---|---|---|
| Corrosion-Resistant | Australia | A-602-803 | 65 FR 18049 | 04/06/00 |
| Cut-to-Length | Belgium | A-423-805 | 65 FR 18292 | 04/07/00 |

| Product | Country | ITA Case No. | Federal Register citation | Date |
|---|---|---|---|---|
| Cut-to-Length | Belgium | C-423-806 | 65 FR 18066 | 04/06/00 |
| Cut-to-Length | Brazil | A-351-817 | 65 FR 18052 | 04/06/00 |
| Cut-to-Length | Brazil | C-351-818 | 65 FR 18065 | 04/06/00 |
| Corrosion-Resistant | Canada | A-122-822 | 65 FR 47379 | 04/02/00 |
| Cut-to-Length | Canada | A-122-823 | 65 FR 47383 | 08/02/00 |
| Cut-to-Length | Finland | A-405-802 | 65 FR 18054 | 04/06/00 |
| Corrosion-Resistant | France | A-427-808 | 65 FR 18050 | 04/06/00 |
| Corrosion-Resistant | France | C-427-810 | 65 FR 18063 | 04/06/00 |
| Cold-Rolled | Germany | A-428-814 | 65 FR 18046 | 04/06/00 |
| Cold-Rolled | Germany | C-428-817 | 65 FR 47407 | 08/02/00 |
| Corrosion-Resistant | Germany | C-428-817 | 65 FR 47407 | 08/02/00 |
| Corrosion-Resistant | Germany | A-428-815 | 65 FR 18051 | 04/06/00 |
| Cut-to-Length | Germany | C-428-817 | 65 FR 47407 | 08/02/00 |
| Cut-to-Length | Germany | A-428-816 | 65 FR 18055 | 04/06/00 |
| Corrosion-Resistant | Japan | A-588-826 | 65 FR 47380 | 08/02/00 |
| Cold-Rolled | Korea | A-580-815 | 65 FR 18044 | 04/06/00 |
| Cold-Rolled | Korea | C-580-818 | 65 FR 18973 | 04/10/00 |
| Corrosion-Resistant | Korea | A-580-816 | 65 FR 18044 | 04/06/00 |
| Corrosion-Resistant | Korea | C-580-818 | 65 FR 18973 | 04/10/00 |
| Cut-to-Length | Mexico | A-201-809 | 65 FR 18052 | 04/06/00 |
| Cut-to-Length | Mexico | C-201-810 | 65 FR 18067 | 04/06/00 |
| Cold-Rolled | Netherlands | A-421-804 | 65 FR 47377 | 08/02/00 |
| Cut-to-Length | Poland | A-455-802 | 65 FR 18054 | 04/06/00 |
| Cut-to-Length | Romania | A-485-803 | 65 FR 47382 | 08/02/00 |
| Cut-to-Length | Spain | A-469-803 | 65 FR 18056 | 04/06/00 |
| Cut-to-Length | Spain | C-469-804 | 65 FR 18307 | 04/07/00 |
| Cut-to-Length | Sweden | A-401-805 | 65 FR 18054 | 04/06/00 |
| Cut-to-Length | Sweden | C-401-804 | 65 FR 18305 | 04/07/00 |
| Cold-Rolled | Sweden | C-401-401 | 65 FR 18290 | 04/07/00 |
| Carbon Steel Plate | Taiwan | A-583-080 | 65 FR 18043 | 04/06/00 |
| Cut-to-Length | UK | C-412-815 | 65 FR 18309 | 04/07/00 |
| Cut-to-Length | UK | A-412-814 | 65 FR 18056 | 04/06/00 |

On December 1, 2000, the Commission determined, pursuant to section 751(c) of the Act, that revocation of the antidumping and countervailing duty orders on certain carbon steel products from Canada (A–122–823), Germany (C–428–817; A–428–814), Korea (C–580–818; A–580–815), the Netherlands (A–421–804), and Sweden (C–401–401) would not be likely to lead to continuation or recurrence of material injury to an industry in the United States within a reasonably foreseeable time. *See* Certain Carbon Steel Products from Australia, Belgium, Brazil, Canada, Finland, France, Germany, Japan, Korea, Mexico, Netherlands, Poland, Romania, Spain, Sweden, Taiwan, and the United Kingdom, 65 FR 75301 (December 1, 2000), as amended 65 FR 77074 (December 8, 2000), and USITC Publication 3364, Investigation Nos. AA1921–197 (Review), 701–TA–231, 319–320, 322, 325–328, 340, 342, and 348–350 (Review), and 731–TA–573–576, 578, 582–587, 604, 607–608, 612, and 614–618 (Review) (November 2000).

*Scope of the Orders:* See Appendix.

**Determination**

As a result of the determination by the Commission that revocation of the antidumping and countervailing duty orders on cut-to-length steel products from Canada (A–122–823), cold-rolled steel products from Germany (A–428–814, C–428–817), cold-rolled steel products from Korea (A–580–815, C–580–818), cold-rolled steel products from the Netherlands (A–421–804), and cold-rolled steel products from Sweden (C–401–401), is not likely to lead to continuation or recurrence of material injury to an industry in the United States, pursuant to section 751(d)(2) of the Act, and 19 CFR 351.222(i)(1), the Department hereby revokes the antidumping and countervailing duty orders on cut-to length steel plate from Canada (A–122–823), cold-rolled steel products from Germany (C–428–817, A–428–814), cold-rolled steel products from Korea (A–580–815, C–580–818), cold-rolled steel products from the Netherlands (A–421–804), and cold-rolled steel products from Sweden (C–401–401).

The Department will instruct the Customs Service to discontinue the suspension of liquidation and collection of cash deposit rates on entries of the subject merchandise entered or withdrawn from warehouse on or after January 1, 2000. The effective date of revocation of these antidumping and countervailing duty orders is January 1, 2000.

Dated: December 8, 2000.

**Joseph A. Spetrini,**

*Acting Assistant Secretary for Import Administration.*

## Appendix—Scope of Antidumping and Countervailing Duty Orders; Cold-Rolled Carbon Steel Products

The product covered by these antidumping and countervailing duty orders is certain cold-rolled carbon steel flat products from Germany (C–428–817; A–428–814), Korea (C–580–818; A–580–815), the Netherlands (A–421–804) and Sweden (C–401–401). The product includes cold-rolled (cold-reduced) carbon steel flat-rolled products, of rectangular shape, neither clad, plated nor coated with metal, whether or not painted, varnished or coated with plastics or other nonmetallic substances, in coils (whether or not in successively superimposed layers) and of a width of 0.5 inch or greater, or in straight lengths which, if of a thickness less than 4.75 millimeters, are of a width of 0.5 inch or greater and which measures at least 10 times the thickness or if of a thickness of 4.75 millimeters or more are of a width which exceeds 150 millimeters and measures at least twice the thickness, as currently classifiable in the Harmonized Tariff Schedule (''HTS'') under item numbers: 7209.11.0000, 7209.12.0000, 7209.12.0030, 7209.12.0090, 7209.13.0000, 7209.13.0030, 7209.13.0090, 7209.14.0030, 7209.14.0090, 7209.15.0000, 7209.16.0030, 7209.16.0060, 7209.16.0090, 7209.17.0030, 7209.17.0060, 7209.17.0090, 7209.18.1530, 7209.18.1560,

7209.18.2550, 7209.18.6000, 7209.21.0000, 7209.22.0000, 7209.23.0000, 7209.24.1000, 7209.24.5000, 7209.25.0000, 7209.26.0000, 7209.27.0000, 7209.28.0000, 7209.31.0000, 7209.32.0000, 7209.33.0000, 7209.34.0000, 7209.41.0000, 7209.42.0000, 7209.43.0000, 7209.44.0000, 7209.90.0000, 7210.70.3000, 7210.90.9000, 7211.23.1500, 7211.23.2000, 7211.23.3000, 7211.23.4500, 7211.23.6030, 7211.23.6060, 7211.23.6085, 7211.29.2030, 7211.29.2090, 7211.29.4500, 7211.29.6030, 7211.29.6080, 7211.30.1030, 7211.30.1090, 7211.30.3000, 7211.30.5000, 7211.41.1000, 7211.41.3030, 7211.41.3090, 7211.41.5000, 7211.41.7000, 7211.41.7030, 7211.41.7060, 7211.41.7090, 7211.49.1030, 7211.49.1090, 7211.49.3000, 7211.49.5000, 7211.49.5030, 7211.49.5060, 7211.49.5090, 7211.90.0000, 7212.40.1000, 7212.40.5000, 7212.50.0000, 7215.50.0015, 7215.50.0060, 7215.50.0090, 7215.90.5000, 7217.10.1000, 7217.10.2000, 7217.10.3000, 7217.10.7000, 7217.11.1000, 7217.11.2000, 7217.11.3000, 7217.19.1000, 7217.19.5000, 7217.21.1000, 7217.29.1000, 7217.29.5000, 7217.31.1000, 7217.39.1000, 7217.39.5000, 7217.90.1000, 7217.90.5030, 7217.90.5060, 7217.90.5090.

Included in the scope of the antidumping and countervailing duty orders on cold-rolled steel products from Germany (C–428–817; A–428–814), Sweden (C–401–401), Korea (C–580–818; A–580–815), and the Netherlands (A–421–804), are flat-rolled products of non-rectangular cross-section where such cross-section is achieved subsequent to the rolling process (i.e., products which have been worked after rolling)—for example, products which have been bevelled or rounded at the edges. Excluded are certain shadow mask steel; i.e., aluminum-killed, cold-rolled steel coil that is open-coil annealed, has a carbon content of less than 0.002 percent, is of 0.003 to 0.012 inch in thickness, 15 to 30 inches in width, and has an ultra flat, isotropic surface. The HTS item numbers in the scope of cold-rolled carbon steel products from Germany Korea, the Netherlands, and Sweden, are provided for convenience and custom purposes. The written description remains dispositive.

*Cut-to-Length Steel Plate From Canada (A–122–823)*

The scope of the antidumping duty order on cut-to-length steel plate from Canada includes hot-rolled carbon steel universal mill plates (i.e., flat-rolled products rolled on four faces or in a closed box pass, of a width exceeding 150 millimeters but not exceeding 1,250 millimeters and of a thickness of not less than 4 millimeters, not in coils and without patterns in relief), of rectangular shape, neither clad, plated, nor coated with metal, whether or not painted, varnished, or coated with plastics or other nonmetallic substances; and certain hot-rolled carbon steel flat-rolled products in straight lengths, of rectangular shape, hot rolled, neither clad, plated, nor coated with metal, whether or not painted, varnished, or coated with plastics or other nonmetallic substances, 4.75 millimeters or more in thickness and of a width which exceeds 150 millimeters and measures at least twice the thickness, as currently classifiable in the Harmonized Tariff Schedule (''HTS'') under item numbers: 7208.40.3030, 7208.40.3060, 7208.51.5030, 7208.51.0045, 7208.51.0060, 7208.52.0000, 7208.53.0000, 7208.90.0000, 7210.70.3000, 7210.90.9000, 7211.13.0000, 7211.14.0030, 7211.14.0045, 7211.90.0000, 7212.40.1000, 7212.40.5000, and 7212.50.0000. Included in this order are flat-rolled products of non-rectangular cross-section where such cross-section is achieved subsequent to the rolling process (i.e., products which have been ''worked after rolling'')—for example, products which have been beveled or rounded at the edges. Excluded from the antidumping duty order on cut-to-length from Canada is grade X–70 plate. Also excluded is cut-to-length carbon steel plate, meeting the following criteria: (1) 100 percent dry steel plates, virgin steel, no scrap content (free of Cobalt-60 and other radioactive nuclides); (2) 0.290 inches maximum thickness, plus 0.0, minus 0.030 inches; (3) 48.00 inch wide, plus 0.05, minus 0.0 inches; (4) 10 foot lengths, plus 0.5, minus 0.0 inches; (5) flatness, plus/minus 0.5 inch over 10 feet; (6) AISI 1006; (7) tension leveled; (8) pickled and oiled; and (9) carbon content, 0.3 to 0.8 (maximum).

On February 12, 1999, the Department revoked the order with respect to cut-to-length carbon steel plate from Canada, free of cobalt-60 and other radioactive nuclides; and with certain dimensions and other characteristics. See 64 FR 7167 (February 12, 1999). The HTS item numbers are provided for convenience and customs purposes. The written description remains dispositive.

[FR Doc. 00–31943 Filed 12–14–00; 8:45 am]

BILLING CODE 3510–DS–P

## DEPARTMENT OF COMMERCE

## International Trade Administration

**[A–602–803, A–423–805, C–423–806, A–351–817, C–351–818, A–122–822, A–405–802, A–427–808, C–427–810, C–428–817, A–428–815, C–428–817, A–428–816, A–588–826, A–580–816, C–580–818, A–201–809, C–201–810, A–455–802, A–485–803, A–469–803, C–469–804, A–401–805, C–401–804, A–583–080, C–412–815, A–412–814]**

## Continuation of Antidumping and Countervailing Duty Orders on Certain Carbon Steel Products from Australia, Belgium, Brazil, Canada, Finland, France, Germany, Japan, South Korea, Mexico, Poland, Romania, Spain, Sweden, Taiwan, and the United Kingdom

**AGENCY:** Import Administration, International Trade Administration, Department of Commerce.

**ACTION:** Notice of Continuation of Antidumping and Countervailing Duty Orders on Certain Carbon Steel Products from Australia, Belgium, Brazil, Canada, Finland, France, Germany, Japan, South Korea, Mexico, Poland, Romania, Spain, Sweden, Taiwan, and the United Kingdom.

**SUMMARY:** The Department of Commerce (''the Department'') and the International Trade Commission (''the Commission''), pursuant to sections 751(c) and 752 of the Tariff Act of 1930, as amended (''the Act''), determined that revocation of the antidumping and countervailing duty orders on certain carbon steel products would be likely to lead to continuation or recurrence of dumping or subsidization, and material injury to an industry in the United States within a foreseeable time. Therefore, pursuant to 19 CFR 351.218(f)(4), the Department is publishing notice of the continuation of the following antidumping and countervailing duty orders on certain carbon steel products from Australia, Belgium, Brazil, Canada, Finland, France, Germany, Japan, Korea, Mexico, Poland, Romania, Spain, Sweden, Taiwan, and the United Kindgom (''UK''):

| Product | Country | ITA Case No. |
|---|---|---|
| Corrosion-Resistant | Australia | A–602–803 |
| Cut-to-Length | Belgium | A–423–805 |
| Cut-to-Length | Belgium | C–423–806 |
| Cut-to-Length | Brazil | A–351–817 |
| Cut-to-Length | Brazil | C–351–818 |
| Corrosion-Resistant | Canada | A–122–822 |
| Cut-to-Length | Finland | A–405–802 |
| Corrosion-Resistant | France | A–427–808 |
| Corrosion-Resistant | France | C–427–810 |
| Corrosion-Resistant | Germany | C–428–817 |

| Product | Country | ITA Case No. |
|---|---|---|
| Corrosion-Resistant | Germany | A–428–815 |
| Cut-to-Length | Germany | C–428–817 |
| Cut-to-Length | Germany | A–428–816 |
| Corrosion-Resistant | Japan | A–588–826 |
| Corrosion-Resistant | Korea | A–580–816 |
| Corrosion-Resistant | Korea | C–580–818 |
| Cut-to-Length | Mexico | A–201–809 |
| Cut-to-Length | Mexico | C–201–810 |
| Cut-to-Length | Poland | A–455–802 |
| Cut-to-Length | Romania | A–485–803 |
| Cut-to-Length | Spain | A–469–803 |
| Cut-to-Length | Spain | C–469–804 |
| Cut-to-Length | Sweden | A–401–805 |
| Cut-to-Length | Sweden | C–401–804 |
| Carbon Steel Plate | Taiwan | A–583–080 |
| Cut-to-Length | UK | C–412–815 |
| Cut-to-Length | UK | A–412–814 |

**EFFECTIVE DATE:** December 15, 2000.

**FOR FURTHER INFORMATION CONTACT:** Martha V. Douthit or James P. Maeder, Office of Policy for Import Administration, International Trade Administration, U.S. Department of Commerce, 14th Street and Constitution Ave., NW, Washington, D.C. 20230; telephone: (202) 482–5050 or (202) 482–3330, respectively.

**SUPPLEMENTARY INFORMATION:**

## Background

On September 1, 1999, the Department initiated (64 FR 47767), and the Commission instituted (64 FR 47862), sunset reviews of the antidumping and countervailing duty orders on certain carbon steel products from Australia, Belgium, Brazil, Canada, Finland, France, Germany, Japan, Korea, Mexico, Netherlands, Poland, Romania, Spain, Sweden, Taiwan, and the UK pursuant to section 751(c) of the Act. As a result of its reviews, the Department found that revocation of the following antidumping and countervailing duty orders on certain carbon steel products from Australia, Belgium, Brazil, Canada, Finland, France, Germany, Japan, Korea, Mexico, the Netherlands, Poland, Romania, Spain, Sweden, Taiwan, and the UK would likely lead to continuation or recurrence of dumping and/or subsidization, and notified the Commission of the magnitude of the margins likely to prevail were the orders revoked:

| Product | Country | ITA Case No. | Federal Register Citation | Date |
|---|---|---|---|---|
| Corrosion-Resistant | Australia | A–602–803 | 65 FR 18049 | 04/06/00 |
| Cut-to-Length | Belgium | A–423–805 | 65 FR 18292 | 04/07/00 |
| Cut-to-Length | Belgium | C–423–806 | 65 FR 18066 | 04/06/00 |
| Cut-to-Length | Brazil | A–351–817 | 65 FR 18052 | 04/06/00 |
| Cut-to-Length | Brazil | C–351–818 | 65 FR 18065 | 04/06/00 |
| Corrosion-Resistant | Canada | A–122–822 | 65 FR 47379 | 08/02/00 |
| Cut-to-Length | Finland | A–405–802 | 65 FR 18054 | 04/06/00 |
| Corrosion-Resistant | France | A–427–808 | 65 FR 18050 | 04/06/00 |
| Corrosion-Resistant | France | C–427–810 | 65 FR 18063 | 04/06/00 |
| Corrosion-Resistant | Germany | C–428–817 | 65 FR 47407 | 08/02/00 |
| Corrosion-Resistant | Germany | A–428–815 | 65 FR 18051 | 04/06/00 |
| Cut-to-Length | Germany | C–428–817 | 65 FR 47407 | 08/02/00 |
| Cut-to-Length | Germany | A–428–816 | 65 FR 18055 | 04/06/00 |
| Corrosion-Resistant | Japan | A–588–826 | 65 FR 47380 | 08/02/00 |
| Corrosion-Resistant | Korea | A–580–816 | 65 FR 18044 | 04/06/00 |
| Corrosion-Resistant | Korea | C–580–818 | 65 FR 18973 | 04/10/00 |
| Cut-to-Length | Mexico | A–201–809 | 65 FR 18052 | 04/06/00 |
| Cut-to-Length | Mexico | C–201–810 | 65 FR 18067 | 04/06/00 |
| Cut-to-Length | Poland | A–455–802 | 65 FR 18054 | 04/06/00 |
| Cut-to-Length | Romania | A–485–803 | 65 FR 47382 | 08/02/00 |
| Cut-to-Length | Spain | A–469–803 | 65 FR 18056 | 04/06/00 |
| Cut-to-Length | Spain | C–469–804 | 65 FR 18307 | 04/07/00 |
| Cut-to-Length | Sweden | A–401–805 | 65 FR 18054 | 04/06/00 |
| Cut-to-Length | Sweden | C–401–804 | 65 FR 18305 | 04/07/00 |
| Carbon Steel Plate | Taiwan | A–583–080 | 65 FR 18043 | 04/06/00 |
| Cut-to-Length | UK | C–412–815 | 65 FR 18309 | 04/07/00 |
| Cut-to-Length | UK | A–412–814 | 65 FR 18056 | 04/06/00 |

On December 1, 2000, the Commission determined, pursuant to section 751(c) of the Act, that revocation of the above referenced antidumping and countervailing duty orders on certain carbon steel products from Australia, Belgium, Brazil, Canada, Finland, France, Germany, Japan, Korea, Mexico, Poland, Romania, Spain, Sweden, Taiwan, and the UK would be likely to lead to continuation or recurrence of material injury to an industry in the United States within a reasonably foreseeable time. See Certain Carbon Steel Products from Australia,

Belgium, Brazil, Canada, Finland, France, Germany, Japan, Korea, Mexico, Netherlands, Poland, Romania, Spain, Sweden, Taiwan, and the United Kingdom, 65 FR 75301 (December 1, 2000), as amended 65 FR 77074 (December 8, 2000), and USITC Publication 3364, Investigation Nos. AA1921–197 (Review) 701–TA–231, 319–320, 322, 325–328, 340, 342, and 348–350 (Review), and 731–TA–573–576, 578, 582–587, 604, 607–608, 612, and 614–618 (Review) (November 2000).

*Scope of the Orders:* See Appendix.

**Determination**

As a result of the determination by the Department and the Commission that revocation of the antidumping and countervailing duty orders on certain carbon steel products would be likely to lead to continuation or recurrence of dumping or subsidization and material injury to an industry in the United States, pursuant to section 751(d)(2) of the Act, the Department hereby orders the continuation of the antidumping and countervailing duty orders on certain carbon steel products referenced above.

The Department will instruct the Customs Service to continue to collect duty deposits at the rates in effect at the time of entry for all imports of subject merchandise. The effective date of continuation and revocation of these orders will be the date of publication in the **Federal Register** of this notice. Pursuant to section 751(c)(2) and 751(c)(6) of the Act, the Department intends to initiate the next five-year review of the above referenced orders on certain carbon steel products from Australia, Belgium, Brazil, Canada, Finland, France, Germany, Japan, Korea, Mexico, Poland, Romania, Spain, Sweden, Taiwan, and the UK not later than November 2005.

Dated: December 8, 2000.

**Joseph A. Spetrini,**

*Acting Assistant Secretary for Import Administration.*

## Appendix—Scope of the Antidumping and Countervailing Duty Orders; Corrosion-Resistant Carbon Steel Flat Products

Australia (A–602–803); Canada (A–122–822); France (A–427–808; C–427–810); Germany (A–428–815; C–428–817); Japan (A–588–826); Korea (A–580–816; C–580–818)

The products covered by these antidumping and countervailing duty orders on certain corrosion-resistant carbon steel flat products include flat-rolled carbon steel products, of rectangular shape, either clad, plated, or coated with corrosion-resistant metals such as zinc, aluminum, or zinc-, aluminum-, nickel- or iron-based alloys, whether or not corrugated or painted, varnished or coated with plastics or other nonmetallic substances in addition to the metallic coating, in coils (whether or not in successively superimposed layers) and of a width of 0.5 inch or greater, or in straight lengths which, if of a thickness less than 4.75 millimeters, are of a width of 0.5 inch or greater and which measures at least 10 times the thickness or if of a thickness of 4.75 millimeters or more are of a width which exceeds 150 millimeters and measures at least twice the thickness, as currently classifiable in the Harmonized Tariff Schedule (''HTS'') under item numbers 7210.30.0030, 7210.30.0060, 7210.31.0000, 7210.39.0000, 7210.41.0000, 7210.49.0030, 7210.49.0090, 7210.60.0000, 7210.61.0000, 7210.69.0000, 7210.70.6030, 7210.70.6060, 7210.70.6090, 7210.90.1000, 7210.90.6000, 7210.90.9000, 7210.20.000, 7212.21.0000, 7212.29.0000, 7212.30.1030, 7212.30.1090, 7212.30.3000, 7212.30.5000, 7212.40.1000, 7212.40.5000, 7212.50.0000, 7212.60.0000, 7215.90.1000, 7215.90.3000, 7215.90.5000, 7217.12.1000, 7217.13.1000, 7217.19.1000, 7217.19.5000, 7217.20.1500, 7217.22.5000, 7217.23.5000, 7217.29.1000, 7217.29.5000, 7217.30.1530, 7217.30.1560, 7217.32.5000, 7217.33.5000, 7217.39.1000, 7217.39.5000, 7217.90.1000, 7217.90.5030, 7217.90.5060, 7217.90.5090.

Included are flat-rolled products of non-rectangular cross-section where such cross-section is achieved subsequent to the rolling process (i.e., products which have been ''worked after rolling'')—for example, products which have been beveled or rounded at the edges.

Excluded are flat-rolled steel products either plated or coated with tin, lead, chromium, chromium oxides, both tin and lead (''terne plate''), or both chromium and chromium oxides (''tin-free steel''), whether or not painted, varnished or coated with plastics or other nonmetallic substances in addition to the metallic coating; clad products in straight lengths of 0.1875 inch or more in composite thickness and of a width which exceeds 150 millimeters and measures at least twice the thickness; and certain clad stainless flat-rolled products, which are three-layered corrosion-resistant carbon steel flat-rolled products less than 4.75 millimeters in composite thickness that consist of a carbon steel flat-rolled product clad on both sides with stainless steel in a 20%–60%–20% ratio. Excluded are certain electrolytic zinc-coated steel coiled rolls from Japan. Also excluded from the antidumping duty order on corrosion-resistant carbon steel flat products from Japan are certain corrosion-resistant carbon steel flat products meeting the following specifications: (1) Widths ranging from 10 millimeters (0.394 inches) through 100 millimeters (3.94 inches); (2) thicknesses, including coatings, ranging from 0.11 millimeters (0.004 inches) through 0.60 millimeters (0.024 inches); and (3) a coating that is from 0.003 millimeters (0.00012 inches) through 0.005 millimeters (0.000196 inches) in thickness and that is comprised of either two evenly applied layers, the first layer consisting of 99 percent zinc, 0.5 percent cobalt, and 0.5 percent molybdenum followed by a layer consisting of chromate, and finally, a layer consisting of silicate. The HTS item numbers are provided for convenience and Customs purposes. The written description remains dispositive.

**Cut-to-Length**

Belgium (A–423–805, C–423–806); Brazil (A–351–817, C–351–818); Finland (A–405–802); Germany (A–428–816, C–428–817); Mexico (A–201–809, C–201–810); Poland (A–455–802); Romania (A–485–803); Spain (A–469–803, C–469–804); Sweden (A–401–805, C–401–804); UK (A–412–814, C–412–815)

The products covered by these antidumping and countervailing duty orders on cut-to-length carbon steel plate products include hot-rolled carbon steel universal-mill plates (i.e., flat-rolled products rolled on four faces or in a closed box pass, of a width exceeding 150 millimeters but not exceeding 1,250 millimeters and of a thickness of not less than 4 millimeters, not in coils and without patterns in relief), or rectangular shape, neither clad, plated nor coated with metal, whether or not painted, varnished, or coated with plastics or other nonmetallic substances; and certain hot-rolled carbon steel flat-rolled products in straight lengths, or rectangular shape, hot rolled, neither clad, plated, nor coated with plastics or other nonmetallic substances, 4.75 millimeters or more in thickness and of a width which exceeds 150 millimeters and measures at least twice the thickness, as currently classifiable in the United States Harmonized Tariff Schedule (''USHTS'') under item numbers: 7208.22.000, 7208.31.0000, 7208.32.0000, 7208.33.1000, 7208.33.5000, 7208.38.000, 7208.40.3030, 7208.40.3060, 7208.41.0000, 7208.42.0000, 7208.43.0000, 7208.51.0030, 7208.51.0045, 7208.51.0060, 7208.52.000, 7208.53.0000, 7208.90.0000, 7210.70.3000, 7210.90.9000, 7211.11.0000, 7211.12.0000, 7211.13.0000, 7211.14.0030, 7211.14.0045, 7211.21.0000, 7211.22.0045, 7211.90.0000, 7212.40.1000, 7212.40.5000, 7212.50.0000, 7212.50.5000.

Excluded from the scope is grade X–70 plate. Also excluded from the scope of the antidumping duty orders on cut-to-length steel plate from Finland, United Kingdom and Germany, and the countervailing duty order on cut-to-length steel plate from Germany and the United Kingdom, are plate products with a maximum thickness of 80 mm in steel grades BS 7191, 355 EMZ, as amended by Sable Offshore Energy Project specification XB MOO Y 15 0001, types 1 and 2. Also excluded from the antidumping duty order are cut-to-length steel plate from Canada meeting the following criteria: (1) 100 percent dry steel plates, virgin steel, no scrap content (free of Cobalt-60 and other radioactive nuclides); (2) 0.290 inches maximum thickness, plus 0.0, minus 0.030 inches; (3) 48.00 inch wide, plus 0.05, minus 0.0 inches; (4) 10 foot lengths, plus 0.5, minus 0.0 inches; (5) flatness, plus/minus 0.5 inch over 10 feet; (6) AISI 1006; (7) tension leveled; (8) pickled and oiled; and (9) carbon content, 0.3 to 0.8 (maximum). The Department revoked the antidumping duty order on cut-to-length carbon steel plate from Canada with respect to certain cut-to-length carbon steel plate free of cobalt-60 and other radioactive nuclides; and with certain

dimensions and other characteristics. The HTS item numbers are provided for convenience and customs purposes. The Department's written description remains dispositive.

**Carbon Steel Plate**

*Taiwan* (A–583–080)

Imports covered by this antidumping order are shipments of hot-rolled carbon steel plate, 0.1875 inch or more in thickness, over eight inches in width, not in coils, not pickled, not coated, or plated with metal, not clad, nor pressed or stamped to non-rectangular shape. Such merchandise was classifiable under HTS item number 607.6615. These imports are currently classifiable under the HTS item numbers 7208.40.3030, 7208.40.3060,7208.51.0030, 7208.51.0045, 7208.51.0060, 7208.52.0000, 7211.13.0000, 7211.14.0030, and 7211.14.0045.

The HTS item numbers are provided for convenience and customs purposes. The Department's written description remains dispositive.

[FR Doc. 00–31944 Filed 12–14–00; 8:45 am]

BILLING CODE 3510–DS–P

## DEPARTMENT OF COMMERCE

## International Trade Administration

**[A–580–815]**

## Cold-Rolled Carbon Steel Flat Products From the Republic of Korea: New Shipper Review

**AGENCY:** Import Administrations, International Trade Administration, Department of Commerce.

**ACTION:** Notice of recission of the new shipper review of Hyundai Pipe Co., Ltd. for the period August 1, 1999 through July 31, 2000.

**SUMMARY:** On October 5, 2000, in response to a request made by Hyundai Pipe Co., Ltd. (HDP), the Department of Commerce (Department) published the notice of initiation of a new shipper review regarding cold-rolled carbon steel flat products from the Republic of Korea., for the period August 1, 1999 through July 31, 2000. Because HDP has withdrawn its request for review, the Department is rescinding this review in accordance with 19 CFR 351.214(f)(1).

**EFFECTIVE DATE:** December 15, 2000.

**FOR FURTHER INFORMATION CONTACT:** James Doyle, Enforcement Group III, Office 9, Import Administration, International Trade Administration, U.S. Department of Commerce, 1401 Constitution Avenue, NW., Washington, DC 20230; telephone 202–482–0159.

**SUPPLEMENTARY INFORMATION:**

### Applicable Statute and Regulations

Unless otherwise indicated, all citations to the Tariff Act of 1930, as amended (the Act), are references to the provisions effective January 1, 1995, the effective date of the Uruguay Round Agreements Act. In addition, unless otherwise indicated, all citations to the Department's regulations are to the regulations codified at 19 CFR Part 351 (2000).

### Background

On August 31, 2000, HDP requested that the Department conduct a new shipper review with respect to HDP's U.S. entries of cold-rolled carbon steel flat products from Korea made during the period August 1, 1999 through July 31, 2000. On October 5, 2000, the Department published a notice of initiation of the new shipper review of cold-rolled carbon steel flat products from Korea, in accordance with 19 CFR 351.221(c)(1)(i). *See Certain Cold-Rolled Carbon Steel Flat Products from Korea: Initiation of New Shipper Antidumping Duty Administrative Review,* 65 FR 59390. On November 7, 2000, HDP withdrew its request for a review.

### Rescission of Review

Pursuant to Departmental regulations, the Department will rescind a new shipper administrative review ''if a party that requested a review withdraws its request not later than 60 days after the date of publication of notice of initiation of the requested review.'' *See* 19 CFR 351.214(f)(1). HDP's withdrawal of its request for review was within the 60-day time limit; accordingly, we are rescinding the new shipper administrative review regarding HDP's U.S. entries of cold-rolled carbon steel flat products from Korea for the period August 1, 1999 through July 31, 2000, and will issue appropriate assessment instructions to the U.S. Customs Service.

This notice serves as a reminder to parties subject to administrative protective order (APO) of their responsibility concerning the disposition of proprietary information disclosed under APO in accordance with 19 CFR 351.305(a)(3). Timely written notification of the return or destruction of APO materials or conversion to judicial protective order is hereby requested. Failure to comply with the regulations and terms of an APO is a sanctionable violation. This determination is issued in accordance with 19 CFR 351.214(f)(3) and Section 777(i)(1) of the Act.

Dated: December 7, 2000.

**Joseph A. Spetrini,**

*Deputy Assistant Secretary, Enforcement Group III.*

[FR Doc. 00–31942 Filed 12–14–00; 8:45 am]

BILLING CODE 3510–DS–P

## DEPARTMENT OF COMMERCE

## International Trade Administration

**[A–337–803]**

## Notice of Final Results of Antidumping Duty Administrative Review: Fresh Atlantic Salmon from Chile

**AGENCY:** Import Administration, International Trade Administration, Department of Commerce.

**SUMMARY:** On August 8, 2000, the Department of Commerce (the Department) published the preliminary results of its administrative review of the antidumping duty order on fresh Atlantic salmon from Chile. The review covers nine producers/exporters of the subject merchandise.

The period of review (POR) is July 28, 1998, through June 30, 1999. Based on our analysis of comments received, these final results differ from the preliminary results. The final results are listed below in the *Final Results of Review* section.

**EFFECTIVE DATE:** December 15, 2000.

**FOR FURTHER INFORMATION CONTACT:** Edward Easton or Gabriel Adler, at (202) 482–3003 or (202) 482–3813, respectively; AD/CVD Enforcement, Office V, Group II, Import Administration, International Trade Administration, U.S. Department of Commerce, 14th Street & Constitution Avenue, NW, Washington, DC 20230.

**SUPPLEMENTARY INFORMATION:**

### Applicable Statute and Regulations

Unless otherwise indicated, all citations to the Tariff Act of 1930, as amended (the Act), are references to the provisions effective January 1, 1995, the effective date of the amendments made to the Act by the Uruguay Round Agreements Act (URAA). In addition, unless otherwise indicated, all citations to the Department's regulations are to 19 CFR part 351 (1999).

### Background

On August 8, 2000, the Department published in the **Federal Register** the preliminary results of the first administrative review of the antidumping duty order on fresh Atlantic salmon from Chile. *See Notice of Preliminary Results of Antidumping Administrative Review: Fresh Atlantic*

*Salmon from Chile,* 65 FR 48457 (August 8, 2000) (*Preliminary Results*). We invited parties to comment on the *Preliminary Results.* On September 12, 2000, we received case comments or case briefs from the Coalition for Fair Atlantic Salmon Trade (the petitioner), and from respondents Cultivos Marinos Chiloe, Ltda. (Cultivos Marinos), Pesquera Eicosal Ltda. (Eicosal), Fiordo Blanco, S.A. (Fiordo Blanco), Cultivadora de Salmones Linao Ltda. (Linao), Salmones Mainstream, S.A. (Mainstream), Pesquera Mares Australes Ltda. (Mares Australes), Salmones Pacific Star S.A. (Pacific Star), Salmones Pacifico Sur S.A. (Pacifico Sur), and Salmones Tecmar S.A. (Tecmar). We did not receive rebuttal briefs.

**Scope of the Review**

The product covered by this review is fresh, farmed Atlantic salmon, whether imported ''dressed'' or cut. Atlantic salmon is the species *Salmo salar,* in the genus *Salmo* of the family *salmoninae.* ''Dressed'' Atlantic salmon refers to salmon that has been bled, gutted, and cleaned. Dressed Atlantic salmon may be imported with the head on or off; with the tail on or off; and with the gills in or out. All cuts of fresh Atlantic salmon are included in the scope of the review. Examples of cuts include, but are not limited to: crosswise cuts (steaks), lengthwise cuts (fillets), lengthwise cuts attached by skin (butterfly cuts), combinations of crosswise and lengthwise cuts (combination packages), and Atlantic salmon that is minced, shredded, or ground. Cuts may be subjected to various degrees of trimming, and imported with the skin on or off and with the ''pin bones'' in or out.

Excluded from the scope are (1) fresh Atlantic salmon that is ''not farmed'' (*i.e.,* wild Atlantic salmon); (2) live Atlantic salmon; and (3) Atlantic salmon that has been subject to further processing, such as frozen, canned, dried, and smoked Atlantic salmon, or processed into forms such as sausages, hot dogs, and burgers.

The merchandise subject to this investigation is classifiable as item numbers 0302.12.0003, 0304.10.4093, 0304.90.1009, 0304.90.1089, and 0304.90.9091 of the Harmonized Tariff Schedule of the United States (HTSUS). Although the HTSUS statistical reporting numbers are provided for convenience and customs purposes, the written description of the merchandise is dispositive.

**Analysis of Comments Received**

All issues raised in the case comments and case briefs by parties to this administrative review are addressed in a decision memorandum dated December 6, 2000 (*Decision Memorandum*), which is hereby adopted by this notice. Attached to this notice as an appendix is a list of the issues which parties have raised and to which we have responded in the *Decision Memorandum*. Parties can find a complete discussion of all issues raised in this review and the corresponding recommendations in the public version of this memorandum, which is on file in Room B–099 of the main Commerce building. In addition, a complete version of the public version of the *Decision Memorandum* can be accessed directly on the Web at *www.ia.ita.doc.gov.* The paper copy and electronic version of the *Decision Memorandum* are identical in content.

**Changes Since the Preliminary Determination**

Based on our findings at verification and analysis of comments received, we have made adjustments to the preliminary determination calculation methodology in determining the final dumping margins in the proceeding. These adjustments are discussed in the *Decision Memorandum*.

**Final Results of Review**

As a result of our review, we determine that the following weighted-average margins exist for the period of July 28, 1998, through June 30, 1999:

| Exporter/manufacturer | Weighted-average margin percentage |
|---|---|
| Cultivos Marinos | 0.01 |
| Eicosal | 0.18 |
| Fiordo Blanco | 1.46 |
| Linao | 0.00 |
| Mainstream | 0.00 |
| Mares Australes | 0.00 |
| Pacific Star | 3.94 |
| Pacifico Sur | 0.00 |
| Tecmar | 0.01 |

The Department shall determine, and the Customs Service shall assess, antidumping duties on all appropriate entries. In accordance with 19 CFR 351.212(b)(1), we have calculated importer-specific assessment rates based on the ratio of the total amount of antidumping duties calculated for the importer-specific sales to the total entered value of the same sales. Where the assessment rate is above de minimis, we will instruct the Customs Service to assess duties on all entries of subject merchandise by that importer. The Department will issue appraisement instructions directly to the Customs Service.

Furthermore, the following deposit requirements will be effective for all shipments of the subject merchandise entered, or withdrawn from warehouse, for consumption on or after the publication date of these final results of administrative review, as provided by section 751(a) of the Act: (1) For all exporters/manufacturers covered by this review, the cash deposit rate will be the rate listed above, except where the margin is zero or de minimis, a cash deposit of zero will be required; (2) for merchandise exported by producers or exporters not covered in this review but covered in a previous segment of this proceeding, the cash deposit rate will continue to be the company-specific rate published in the most recent final results in which that producer or exporter participated; (3) if the exporter is not a firm covered in this review or in any previous segment of this proceeding, but the producer is, the cash deposit rate will be that established for the producer of the merchandise in these final results of review or in the most recent final results in which that producer participated; and (4) if neither the exporter nor the producer is a firm covered in this review or in any previous segment of this proceeding, the cash deposit rate will be 4.57 percent, the ''All Others'' rate established in the less-than-fair-value investigation. These deposit requirements shall remain in effect until publication of the final results of the next administrative review.

This notice also serves as a final reminder to importers of their responsibility under 19 CFR 351.402 (f) to file a certificate regarding the reimbursement of antidumping duties prior to liquidation of the relevant entries during this review period. Failure to comply with this requirement could result in the Secretary's presumption that reimbursement of antidumping duties occurred, and in the subsequent assessment of double antidumping duties.

This notice also is the only reminder to parties subject to administrative protective order (APO) of their responsibility concerning the return or destruction of proprietary information disclosed under APO in accordance with 19 CFR 351.305. Timely written notification of the return/destruction of APO materials or conversion to judicial protective order is hereby requested. Failure to comply with the regulations and the terms of an APO is a sanctionable violation.

We are issuing and publishing this determination and notice in accordance with sections 751(a)(1) and 777(i)(1) of the Act.

Dated: December 6, 2000.

**Troy H. Cribb,**

*Assistant Secretary for Import Administration.*

## Appendix

1. Cost of Production and Constructed Value: Monetary Corrections for Inflation
2. Constructed Value: Calculation of Profit and Selling Expense Rates
3. Normal Value: Difference-In-Merchandise Adjustment
4. Adverse Facts Available
5. Normal Value: Third-Country Sales
6. Normal Value: Home Market Price Calculation
4. Cost of Production: Financial Expense Ratio—Eicosal
7. Cost of Production: Financial Expense Ratio—Pacific Star
8. Cost of Production: General, Selling and Administrative Expense
9. Cost of Production: Cost Test Freight Expense
10. Constructed Value: Provision for Catastrophic Loss
11. Constructed Value: Use of Verified Data
12. Export Price: Treatment of U.S. Credit Expense

[FR Doc. 00–31945 Filed 12–14–00; 8:45 am]

BILLING CODE 3510–DS–P

## DEPARTMENT OF COMMERCE

### International Trade Administration

**[C–357–813]**

### Notice of Postponement of Preliminary Countervailing Duty Determination: Honey from Argentina.

**AGENCY:** Import Administration, International Trade Administration, Department of Commerce.

**SUMMARY:** The Department of Commerce is extending the time limit for the preliminary determination in the countervailing duty investigation of honey from Argentina from January 2, 2001 until no later than March 5, 2001. This extension is made pursuant to section 703(c)(1)(A) of the Tariff Act of 1930, as amended by the Uruguay Round Agreements Act.

**EFFECTIVE DATE:** December 15, 2000.

**FOR FURTHER INFORMATION CONTACT:** Dana Mermelstein or Doug Campau, Office of AD/CVD Enforcement VII, Import Administration, International Trade Administration, U.S. Department of Commerce, 14th Street and Constitution Avenue, NW., Washington, DC 20230; telephone (202) 482–1391 or (202) 482–1395, respectively.

*Postponement of Preliminary Determination:* On October 26, 2000, the Department initiated the countervailing duty investigation of honey from Argentina. *See Notice of Initiation of Countervailing Duty Investigation: Honey From Argentina,* 65 FR 65835 (November 2, 2000). On December 5, 2000, petitioners made a timely request pursuant to 19 CFR 351.205(e) for a postponement of the preliminary determination in accordance with section 703(c)(1) of the Tariff Act of 1930, as amended (the Act). Petitioners requested a postponement because of the complicated nature of the case, to allow petitioners adequate time to analyze submitted responses, and to allow time for the Department to determine the extent to which particular subsidies are being used.

For reasons identified by the petitioners, we see no compelling reason not to postpone the preliminary determination. *See Memorandum from Deputy Assistant Secretary for AD/CVD Enforcement Joseph A. Spetrini to Assistant Secretary for Import Administration Troy H. Cribb,* dated December 8, 2000 (on file in the public file of the Central Records Unit, Room B–099 of the Department of Commerce). Therefore, we are postponing the preliminary determination under section 703(c)(1)(A) of the Act. We will make our preliminary determination in this investigation no later than March 5, 2001.

This notice of postponement is published pursuant to section 703(c)(2) of the Act.

Dated: December 8, 2000.

**Joseph A. Spetrini,**

*Deputy Assistant Secretary, AD/CVD Enforcement Group III.*

[FR Doc. 00–31941 Filed 12–14–00; 8:45 am]

BILLING CODE 3510–DS–P

## COMMODITY FUTURES TRADING COMMISSION

### Agency Information Collection Activities: Notice of Intent to Renew Collection 3038–0016, Compliance With Requirements for Designation as a Contract Market

**AGENCY:** Commodity Futures Trading Commission.

**ACTION:** Notice.

**SUMMARY:** The Commodity Futures Trading Commission (CFTC) is announcing an opportunity for public comment on the proposed collection of certain information by the agency. Under the Paperwork Reduction Act of 1995 (PRA), 44 U.S.C. 3501, et seq., Federal agencies are required to publish notice in the Federal Register concerning each proposed collection of information, including each proposed extension of an existing collection of information, and to allow 60 days for public comment in response to the notice. This notice solicits comments on compliance for requirements for designation as a contract market.

**DATES:** Comments must be submitted on or before February 13, 2001.

**ADDRESSES:** Comments may be mailed to Lamont L. Reese, Division of Economic Analysis, U.S. Commodity Futures Trading Commission, 1155 21st Street, NW, Washington, DC 20581.

**FOR FURTHER INFORMATION CONTACT:** Lamont L. Reese (202) 418–5310; FAX: (202) 418–5527; email: lreese@cftc.gov.

**SUPPLEMENT INFORMATION:** Under the PRA, Federal agencies must obtain approval from the Office of Management and Budget (OMB) for each collection of information they conduct or sponsor. ''Collection of information'' is defined in 44 USC 3502(3) and 5 CFR 1320.3(c) and includes agency requests or requirements that members of the public submit reports, keep records, or provide information to a third party. Section 3506(c)(2)(A) of the PRA, 44 USC 3506(c)(2)(A), requires Federal agencies to provide a 60-day notice in the Federal Register concerning each proposed collection of information, including each proposed extension of an existing collection of information, before submitting the collection to OMB for approval. To comply with this requirement, the CFTC is publishing notice of the proposed collection of information listed below.

With respect to the following collection of information, the CFTC invites comments on:

- Whether the proposed collection of information is necessary for the proper performance of the functions of the Commission, including whether the information will have a practical use;
- The accuracy of the Commission's estimate of the burden of the proposed collection of information, including the validity of the methodology and assumptions used;
- Ways to enhance the quality, usefulness, and clarity of the information to be collected; and
- Ways to minimize the burden of collection of information on those who are to respond, including through the use of appropriate automated electronic, mechanical, or other technological collection techniques or other forms of information technology; e.g., permitting electronic submission of responses.

Compliance with Requirements for Designation as a Contract Market, OMB control number 3038–0016—Extension

Under Commission Rules 1.50 and 5.2, contract markets must demonstrate that they continue to meet the

designation requirements contained in the Commodity Exchange Act, 7 U.S.C. 1, et seq., and that contract markets, prior to listing trading months for a then-dormant contract, submit a justification showing that the terms and conditions of the contract are in conformance with current commercial practices and that the contract can be expected to serve an economic purpose. These rules are promulgated pursuant to the Commission's rulemaking authority contained in Sections 5 and 5a of the Commodity Exchange Act, 7 U.S.C. 7 and 7a (1994).

The Commission estimates the burden of this collection of information as follows:

ESTIMATED ANNUAL REPORTING BURDEN

| 17 CFR Section | Annual number of respondents | Frequency of response | Total annual responses | Hours per response | Total hours |
|---|---|---|---|---|---|
| 1.50; 5.2 | 11 | On occasion | 2 | 250 | 500 |

There are no capital costs or operating and maintenance costs associated with this collection.

This estimate is based on the number of requests or such letters in the last three years. Although the burden varies with the type, size, and complexity of the request submitted, such request may involve analytical work and analysis, as well as the work of drafting the request itself.

Dated: December 12, 2000.

**Jean A. Webb,**

*Secretary of the Commission.*

[FR Doc. 00–32016 Filed 12–14–00; 8:45 am]

BILLING CODE 6351–01–M

## DEPARTMENT OF DEFENSE

### Office of the Secretary

### Notice of Availability of The National Missile Defense Deployment Final Environmental Impact Statement

**AGENCY:** Office of the Secretary, Ballistic Missile Defense Organization, DoD.

**ACTION:** Notice of availability.

**SUMMARY:** The Ballistic Missile Defense Organization (BMDO) announces the availability of the National Missile Defense (NMD) Deployment Final Environmental Impact Statement (FEIS). The FEIS assesses the potential impacts associated with the deployment of the NMD system.

**DATES:** The review period for the FEIS will end on January 16, 2001 and comments must be received by this date.

**ADDRESSES:** Written comments and inquiries on the FEIS or a request for a copy of the FEIS should be directed to: SMDC–EM–V (Ms. Julia Hudson), U.S. Army Space and Missile Defense Command, PO Box 1500, Huntsville, AL 35807–3801, telephone (256) 955–4822.

**FOR FURTHER INFORMATION CONTACT:** Ms. Julia Hudson, telephone (256) 955–4822.

**SUPPLEMENTARY INFORMATION:** The BMDO announced the availability of the National Missile Defense Deployment Draft Environmental Impact Statement (DEIS) on October 1, 1999 (64 FR 190 53364) providing notice that the DEIS was available for comment. The public review period was from October 1, 1999 through January 19, 2000. Public hearings were held October 26 through November 9, 1999. Comments from the DEIS review and public hearings have been considered and included along with responses in the FEIS. Additionally, availability of an Upgraded Early Warning Radar Supplement to the NMD Deployment DEIS was announced on March 3, 2000 (65 FR 43 11560) with the public comment period from March 3, 2000 to May 12, 2000. This analysis and the comments and responses to the supplement to the DEIS have been included in the NMD Deployment FEIS.

The NMD system would be a fixed, land-based, non-nuclear missile defense system with a land and space-based detection system capable of responding to limited strategic ballistic missile threats to the United States. Potential deployment locations for the NMD elements include sites in Alaska and North Dakota. In addition, as the operational requirements are refined other regions may be identified.

The Preferred Alternative is deployment of a NMD system with up to 100 Ground-Based Interceptor (GBI) silos and Battle Management Command and Control (BMC2) facilities at Fort Greely, Alaska; and an X-Band Radar (XBR) at Eareckson Air Station (AS) (Shemya Island), Alaska. Under the Preferred Alternative, the NMD system would make use of the existing Early Warning Radars (EWR), upgraded for NMD and the existing space-based detection system that would be in place at the time of deployment. The existing EWRs are located at Beale Air Force Base (AFB), California, Clear AS, Alaska, and Cape Cod AS, Massachusetts. If the proposed action to modify the EWRS to support a NMD deployment is selected, its implementation is contingent upon the outcome of the Air Force EIS that addresses modernization, maintenance, and sustainment of operations at the three radar facilities. The BMDO would reassess its proposed usage of the EWR facilities in light of the results of the Air Force EIS prior to installation of the NMD modifications. Due to the ongoing development of the operational requirements, proposed In-Flight Interceptor Communication System (IFICS) Data Terminals locations were not identified as the EIS was being drafted. The FEIS therefore analyzed the expected impacts on a programmatic basis. The BMDO will perform supplemental, site-specific environmental analysis for the IFICS data terminals and fiber optic cable line alignments, as required, based on the initial analysis in the FEIS.

Copies of the FEIS have been distributed to Federal, state, and local agencies; public officials; and organizations and individuals that previously requested copies of the DEIS or FEIS. Copies of the FEIS will be available for review at public libraries in communities adjacent to the potential NMD deployment sites. These communities include: Cavalier, Fargo, Grand Forks, and Langdon in North Dakota; Anchorage, Anderson, Delta Junction, Fairbanks, Healy, Kodiak, and Nenana in Alaska; Live Oak, Marysville, and Yuba City in California; Bourne, Falmouth, Mashpee, Sandwich, and West Barnstable in Massachusetts. The library locations and the FEIS are also available on the BMDO internet site:

*www.acq.ods.mil/bmdo/bmdolink/html/nmd.html.*

Dated: December 11, 2000.

**Patricia L. Toppings,**

*Alternate OSD Federal Register Liaison Officer, Department of Defense.*

[FR Doc. 00–32046 Filed 12–14–00; 8:45 am]

BILLING CODE 5001–10–M

## DEPARTMENT OF DEFENSE

### Department of the Army

### Notice of Intent (NOI) to Prepare a Programmatic Environmental Impact Statement (PEIS) for Implementation of the Army Transformation Campaign Plan (ATCP)

**AGENCY:** Department of the Army, DoD.

**ACTION:** Notice of intent.

**SUMMARY:** The Department of the Army announces its intent to prepare a PEIS to identify and evaluate the environmental effects associated with implementation of the ATCP.

**FOR FURTHER INFORMATION CONTACT:** Lieutenant Colonel Mealer at (703) 614–5050.

**SUPPLEMENTARY INFORMATION:** The prospect of a rapidly changing and more turbulent, unpredictable, global security environment underscores the need for a high level of defense preparedness. To meet the challenges of a wider range of threats and a more complex set of operating environments, the United States will require a world class Army capable of rapid response and dominance across the entire spectrum of operations in a joint, interagency and multinational environment. Today's Army force structure and supporting systems were designed for a different era and enemy. They lack the capability to operate optimally across the full range of likely future operations. The Army's superb heavy forces are unequalled in their ability to gain and hold terrain in the most intense, direct fire combat imaginable; and, once deployed, they are the decisive element in major theater wars. The current heavy forces, however, are challenged to get to contingencies where we have not laid the deployment groundwork and, once deployed, these forces have a large logistical footprint. On the other hand, the Army's current light forces can strike quickly but once inserted lack survivability, lethality and tactical mobility. Therefore, to meet the defense challenges of the future and provide the National Command Authority the decisive landpower forces necessary to support the National Security Strategy and National Military Strategy, the Secretary of the Army and the Chief of Staff of the Army have articulated a clear Army Vision that includes transforming all aspects of the most respected Army in the world into a strategically responsive force that is dominant across the full spectrum of operations.

The Army will implement transformation as rapidly as possible, while continually maintaining the warfighting readiness of its operational forces and taking care of its people. The ATCP will be the mechanism used to integrate and synchronize the implementation of the Army Vision. Indeed, Army transformation has already begun with the establishment of the Initial Force at Fort Lewis, Washington. The Initial Force is a two-brigade combat team force that will transform and will receive off-the-shelf equipment to support evaluation and refinement of the doctrinal Organizational and Operational concepts. This will be followed by the Interim Force consisting of six to eight brigades. The Interim Force is a transition force—one that seeks the Objective Force state-of-the-art technology, but leverages today's technology together with modernized legacy forces as a bridge to the future. The Objective Force is the force that achieves our transformation objective. It is a future force that will be strategically responsive Army, capable of dominating at every point across the full spectrum of operations and which can rapidly transition across mission requirements without loss of momentum. It will be able to operate as an integral member of the joint, multinational, interagency team and will be dominant against the asymmetric application of conventional, unconventional and weapons of mass destruction threat capabilities.

The PEIS is being prepared to comply with the National Environmental Policy Act (NEPA) of 1969. Implementation of the ATCP, as envisioned, will be a major undertaking entailing a series of changes to equipment, force structure and training practices. When all the changes are proposed for specific sites and for equipment acquisition and testing, there will undoubtedly be a range of effects on the environment. The PEIS will inform the public, regulators, concerned groups and Army decision-makers about potential environmental concerns that should be factored into any final decisions to implement the ATCP. In addition, it will provide these groups with a meaningful opportunity to present their views on significant environmental issues and concerns to Army decision-makers.

Alternatives:

1. No Action Alternative: Whereby the ATCP would not be implemented and needed changes to Army equipment, force structure and training practices would be separately analyzed on a piecemeal basis.

2. Action Alternative 1: Whereby the program for transformation of the Army to better meet present and future national security requirements and fulfill the Army Vision would be initiated in accordance with the ATCP including:

a. A comparison of the likely environmental effects at candidate (alternative) sites for placement of the brigades planned for the Interim Force.

b. Identification and analysis of the types of major actions contained in the ATCP leading to the Objective Force and their associated activities and consequential types and magnitude of effects.

3. Action Alternative 2: Whereby the ATCP would only be partially implemented because of budgetary or other constraints.

Significant issues: The issues to be analyzed in this PEIS include noise, impacts to wetlands and riparian areas, soil erosion, air and water quality, endangered species, cultural resources and other issues.

Scoping: Comments received as a result of the NOI will be used to assist the Army in identifying potential impacts to the quality of human and natural environments. Individuals or organizations may participate in the scoping process by providing written comment by mail or by facsimile through the Scoping Page on the Army Homepage web site (www.army.mil). The time and location for scoping via the web site will be announced by public notice in the national news media. To be considered in the draft PEIS, comments and suggestions should be received no later than 30 days following activation of the Scoping Page. Questions regarding this PEIS may be directed to Headquarters, Department of the Army, ATTN: ODCSOPS (DAMO–FMF), 400 Army Pentagon, Washington, D.C. 20310–0400 or by facsimile transmission to (703) 614–3601.

Dated: December 11, 2000.

**Raymond J. Fatz,**

*Deputy Assistant Secretary of the Army, (Environment, Safety and Occupational Health), OASA (I&E).*

[FR Doc. 00–32000 Filed 12–14–00; 8:45 am]

BILLING CODE 3710–08–M

## DEPARTMENT OF EDUCATION

**[CFDA No. 84.342]**

### Preparing Tomorrow's Teachers To Use Technology

Office of Postsecondary Education, Department of Education Notice of requirements and invitation for applications for new awards for fiscal year (FY) 2001.

*Purpose of Program:* The Preparing Tomorrow's Teachers to Use

Technology program provides grants to consortia that are helping future teachers become proficient in the use of modern learning technologies. This program addresses looming teacher shortages by developing well-qualified, technology-proficient teachers, who are prepared to teach in 21st century schools. This program provides support for two types of grants: implementation grants and catalyst grants.

*Eligible Applicants:* Only consortia may receive grants under this program. A consortium must include at least two members. Consortium members may include institutions of higher education (IHEs), schools of education, State educational agencies (SEAs), local educational agencies (LEAs), private schools, professional associations, foundations, museums, libraries, for profit agencies and organizations, nonprofit organizations, community-based organizations, and others.

**Note:** In each consortium a participating nonprofit member must be designated as the ''applicant'' for purposes of 34 CFR 75.128 and must act as the fiscal agent.

*Applications Available:* December 15, 2000.

*Deadline for Receipt of Applications:* February 22, 2001.

**Note:** All application materials must be received on or before the deadline date. Pursuant to 34 CFR 614.8 an application for a grant under this program must be received by the deadline date announced in this notice.

*Deadline for Intergovernmental Review:* May 8, 2001.

*Estimated Available Funds:* $31,750,000. The actual level of funding, if any, depends on final congressional action. However, we are inviting applications to allow enough time to complete the grant process before the end of the fiscal year, if Congress appropriates funds for this program.

*Estimated Range of Awards:* $200,000–$500,000 for implementation grants, and $500,000–$700,000 for catalyst grants.

*Estimated Average Size of Awards:* $350,000 for implementation grants, and $600,000 for catalyst grants.

*Estimated Number of Awards:* 65 implementation grants, and 15 catalyst grants.

*Project Period:* 36 months for implementation grants, and 36 months for catalyst grants.

**Note:** The Department is not bound by any estimates in this notice.

*Applicable Regulations:* (a) The Education Department General Administrative Regulations (EDGAR) in 34 CFR parts 74, 75 (except for 75.102), 77, 79, 81, 82, 85, 86, 97, 98, and 99; (b) The regulation for this program is 34 CFR part 614. The selection criteria and factors to be used for this competition will be provided in the application package.

*Application Review Procedures:* The Secretary announces the use of a multi-tier review process to evaluate all applications submitted for new awards under the FY 2001 Preparing Tomorrow's Teachers to Use Technology program. The Secretary takes this action to ensure a thorough review and assessment of the large number of applications that are expected to be received under the FY 2001 competition. This multi-tier review process does not affect the contents of applications in this competition.

*For Applications Contact:* Preparing Tomorrow's Teachers to Use Technology, U.S. Department of Education, 1990 K Street, NW, Suite 6160, Washington DC 20202–5131. Telephone: (202) 502–7788. Fax: (202) 502–7775. Via Internet: *http://www.ed.gov/teachtech*

If you use a telecommunications device for the deaf (TDD), you may call the Federal Information Relay Service (FIRS) at 1–800–877–8339.

**FOR FURTHER INFORMATION CONTACT:** Pat Pilkerton, Preparing Tomorrow's Teachers to Use Technology, U.S. Department of Education, 1990 K Street, NW, Suite 6160, Washington DC 20202–5131. Telephone: (202) 502–7788. E-mail: *pat__pilkerton@ed.gov*

Individuals who use a telecommunications device for the deaf (TDD) may call the Federal Information Relay Service (FIRS) at 1–800–877–8339.

Individuals with disabilities may obtain this document in an alternative format (e.g., Braille, large print, audiotape, or computer diskette) on request to the contact person listed under **FOR FURTHER INFORMATION CONTACT.**

Individuals with disabilities may obtain a copy of the application package in an alternative format by contacting that person. However, the Department is not able to reproduce in an alternative format the standard forms included in the application package.

### Electronic Access to This Document

You may view this document, as well as all other Department of Education documents published in the **Federal Register**, in text or Adobe Portable Document Format (PDF) on the Internet at either of the following sites:

*http://ocfo.ed.gov/fedreg.htm*
*http://www.ed.gov/news.html*

To use PDF you must have the Adobe Acrobat Reader, which is available free at either of the previous sites. If you have questions about using PDF, call the U.S. Government Printing Office (GPO), toll free, at 1–888–293–6498; or in Washington, DC, area at (202) 512–1530.

**Note:** The official version of this document is the document published in the **Federal Register**. Free Internet access to the official edition of the **Federal Register** and the Code of Federal Regulations is available on GPO Access at: *http://www.access.gpo.gov/nara/index.html*

**Program Authority:** 20 U.S.C. 6832.

Dated: December 11, 2000.

**A. Lee Frischler,**

*Assistant Secretary for Postsecondary Education.*

[FR Doc. 00–31973 Filed 12–14–00; 8:45 am]

BILLING CODE 4000–01–U

## DEPARTMENT OF EDUCATION

## The Use of Tests as Part of High-Stakes Decision-Making for Students: A Resource Guide for Educators and Policymakers

**AGENCY:** Office for Civil Rights, Department of Education.

**ACTION:** Notice of availability of final document.

**SUMMARY:** The Assistant Secretary for Civil Rights announces the availability of a final document entitled ''The Use of Tests as Part of High-Stakes Decision-Making for Students: A Resource Guide for Educators and Policymakers.'' The resource guide is designed to provide educators and policymakers with an informative and practical tool that will assist in their development and implementation of policies that involve the use of tests in making high-stakes decisions for students. The guide provides information about relevant Federal non-discrimination standards and professionally recognized test measurement principles, as well as a collection of resources related to the non-discrimination and test measurement principles discussed in the guide.

**FOR FURTHER INFORMATION CONTACT:** Address requests for copies of the final document to Jeanette J. Lim, U.S. Department of Education, 400 Maryland Avenue, SW., room 5212 Switzer Building, Washington, DC 20202–1100. Telephone: 1–800–421–3481. For all requests submitted by letter, you must include the term ''Testing Guide.'' If you use a telecommunications device for the deaf (TDD), you may call the TDD number at 1–877–521–2172. The final document is also available through the

Internet at the following site: http://www.ed.gov/offices/OCR/testing

If you prefer to send your request through the Internet, use the following address: ocr@ed.gov

You must include the term ''Testing Guide'' in the subject line of your electronic message.

Individuals with disabilities may obtain this document in an alternative format (*e.g.*, Braille, large print, audiotape, or computer diskette) by contacting the Office for Civil Rights' Customer Service Team at 1–800–421–3481.

**SUPPLEMENTARY INFORMATION:** On July 6, 2000, we published a notice of availability of and a request for comments on the draft document entitled ''The Use of Tests When Making High-Stakes Decisions for Students: A Resource Guide for Educators and Policymakers'' in the **Federal Register** (65 FR 41643). The purpose of the resource guide is to provide educators and policymakers with information about Federal non-discrimination standards and test measurement principles concerning the proper use of tests as part of decision-making that has high-stakes consequences for students.

Earlier versions of the draft resource guide have been reviewed by the National Academy of Science's Board on Testing and Assessment (BOTA), the U.S. Department of Justice's Civil Rights Division, and dozens of groups and individuals, including educators, parents, teachers, business leaders, policymakers, test publishers, civil rights groups, individual Members of Congress, and others. BOTA conducted a public hearing on the resource guide on January 26, 2000.

In response to our invitation in the previous **Federal Register** notice of availability, 40 parties submitted comments on the draft document. We have considered these comments in drafting the final guide.

**Electronic Access to This Document**

You may view this document, as well as all other Department of Education documents published in the **Federal Register**, in text or Adobe Portable Document Format (PDF) on the Internet at either of the following sites:

http://ocfo.ed.gov/fedreg.htm
http://www.ed.gov/news.html

To use the PDF, you must have Adobe Acrobat Reader, which is available free at either of the previous sites. If you have questions about using the PDF, call the U.S. Government Printing Office (GPO), toll free, at 1–888–293–6498; or in the Washington, DC area at (202) 512–1530.

**Note:** The official version of this notice is the document published in the **Federal Register**. Free Internet access to the official edition of the **Federal Register** and the Code of Federal Regulations is available on GPO Access at: http://www.access.gpo.gov/nara/index.html.

Dated: December 12, 2000.

**Norma V. Cantu,**

*Assistant Secretary for Civil Rights.*

[FR Doc. 00–31999 Filed 12–14–00; 8:45 am]

BILLING CODE 4000–01–U

## DEPARTMENT OF ENERGY

### Federal Energy Regulatory Commission

**[Docket No. CP01–42–000]**

### Columbia Gas Transmission Corporation; Notice of Application

December 11, 2000.

On November 30, 2000, Columbia Gas Transmission Corporation (Columbia), P.O. Box 1273, Charleston, West Virginia 25325–1273, filed an application in Docket No. CP01–42–000 pursuant to Section 7(b) of the Natural Gas Act (NGA) and Section 157.18 of the Commission's Regulations for permission and approval to abandon by sale to Nicole Gas Production, LTD (Nicole), an Ohio limited liability company, certain natural gas facilities in West Virginia and Pennsylvania (Facilities) and authorization to abandon the related service associated with the Facilities, all as more fully set forth in the application which is on file with the commission and open to public inspection. The filing may be viewed at *http://www.ferc.fed.us/online/rims.htm* (call 202–208–2222 for assistance).

Columbia states that the Facilities to be sold to Nicole were certificated by the Commission as transmission and storage facilities, which were constructed and operated as part of a low pressure transmission system that transported locally produced gas to Columbia's mainline for system supply and redelivery to various markets. Also included in the proposed sale is Columbia's Holbrook Storage Field. Holbrook was constructed in 1950. Columbia does not propose the separate sale of base gas in connection with the proposed sale since it has determined that the recovery of remaining base gas is such a small volume (approximately 1 Bcf) that it is economically unrecoverable. In lieu of Columbia filing a separate Section 4 filing, Columbia ask that the Commission waive its requirement and accept the information provided within the application in Exhibits Z–2 and Z–3 as its notice to terminate service.

Columbia and Nicole entered into a Purchase and Sale Agreement dated September 27, 2000 for the Facilities. Columbia will also sell Nicole various non-jurisdictional facilities (known as the CHEWP System) that the Commission approved for sale in Docket No. CP97–127–000,[1] as well as an additional 23.24 miles of 2- to 16-inch pipeline which was not part of the CP97–127–000 proceeding. The Facilities will be sold for a negotiated amount of $3,655,00. Nicole has advised Columbia that it intends to operate the Facilities as gathering facilities and to use the Facilities primarily for production and gathering activities. Columbia seeks such authorization on or before May 1, 2001.

According to Columbia, Nicole will assume the obligation to continue operating the Facilities, providing both firm and interruptible service to Columbia's customers receiving service through the Facilities on the date of closing, on terms and conditions acceptable to both Nicole and the customers, as well as to the mainline tap consumers of Columbia Gas of Pennsylvania and Mountaineer Gas Company. Thus, there will be no material change to, or interruption in, the services currently being provided to customers through the Facilities. Columbia does not propose any construction or facility removal in connection with the proposed abandonment.

Questions regarding the details of this proposed abandonment should be directed to Victoria J. Hamilton, Certificate Coordinator, Columbia Gas Transmission Corporation, P.O. Box 1273, Charleston, West Virginia 25325–1273, call (304) 357–2297.

There are two ways to become involved in the Commission's review of this abandonment. First, any person wishing to obtain legal status by becoming a party to the proceedings for this abandonment should, on or before January 2, 2001, file with the Federal Energy Regulatory Commission, 888 First Street, NE., Washington, DC 20426, a motion to intervene in accordance with the requirements of the Commission's Rules of Practice and Procedure (18 CFR 385.214 or 385.211) and the Regulations under the NGA (18 CFR 157.10). A person obtaining party status will be placed on the service list maintained by the Secretary of the Commission and will receive copies of all documents filed by the applicant and by all other parties. A party must submit

[1] 79 FERC ¶ 61,045 (1997).

14 copies of filings made with the Commission and must mail a copy to the applicant and to every other party in the proceeding. Only parties to the proceeding can ask for court review of Commission orders in the proceeding.

However, a person does not have to intervene in order to have comments considered. The second way to participate is by filing with the Secretary of the Commission, as soon as possible, an original and two copies of comments in support of or in opposition to this abandonment. The Commission will consider these comments in determining the appropriate action to be taken, but the filing of a comment alone will not serve to make the filer a party to the proceeding. The Commission's rules require that persons filing comments in opposition to the abandonment provide copies of their protests only to the party or parties directly involved in the protest.

Persons who wish to comment only on the environmental review of this abandonment should submit an original and two copies of their comments to the Secretary of the Commission. Environmental commenters will be placed on the Commission's environmental mailing list, will receive copies of the environmental documents, and will be notified of meetings associated with the Commission's environmental review process. Environmental commenters will not be required to serve copies of filed documents on all other parties. However, the non-party commenters will not receive copies of all documents filed by other parties or issued by the Commission (except for the mailing of environmental documents issued by the Commission) and will not have the right to seek court review of the Commission's final order.

The Commission may issue a preliminary determination on non-environmental issues prior to the completion of its review of the environmental aspects of the project. This preliminary determination typically considers such issues as the need for the project and its economic effect on existing customers of the applicant, on other pipelines in the area, and on landowners and communities. For example, the Commission considers the extent to which the applicant may need to exercise eminent domain to obtain rights-of-way for the proposed project and balances that against the non-environmental benefits to be provided by the project. Therefore, if a person has comments on community and landowner impacts from this proposal, it is important either to file comments or to intervene as early in the process as possible.

Comments and protests may be filed electronically via the internet in lieu of paper. See, 18 CFR 385.2001(a)(1)(iii) and the instructions on the Commission's web site at *http://www.ferc.fed.us/efi/doorbell.htm.*

If the Commission decides to set the application for a formal hearing before an Administration Law Judge, the Commission will issue another notice describing that process. At the end of the Commission's review process, a final Commission order approving or denying abandonment will be issued.

**David P. Boergers,**

*Secretary.*

[FR Doc. 00–31971 Filed 12–14–00; 8:45 am]

BILLING CODE 6717–01–M

---

## DEPARTMENT OF ENERGY

### Federal Energy Regulatory Commission

**[Docket No. CP01–44–000]**

### Nicole Gas Production, LTD; Notice of Application

December 11, 2000.

On November 30, 2000, Nicole Gas Production, LTD (Nicole) 513 E. Rich St., Suite 306, Columbus, Ohio 43215, filed an application in Docket No. CP01–44–000 pursuant to Section 7(c) of the Natural Gas Act (NGA) and part 157 of the Commission's regulations for a limited jurisdiction certificate authorizing the incidental use of certain facilities (Facilities) currently owned by Columbia Gas Transmission Corporation (Columbia) in West Virginia and Pennsylvania to deliver gas to existing customers of local distribution companies, all as more fully set forth in the application which is on file with the Commission and open to public inspection. The filing may be viewed at *http://www.ferc.fed.us/online/rims.htm* (call 202–208–2222 for assistance).

Upon acquiring the subject facilities, Nicole will continue to provide transportation of gas to these customers. Currently, Columbia transports locally produced gas through the Facilities to its mainline transmission system. Between the point of receipt and delivery to Columbia's transmission system, gas is delivered at numerous points to a LDC and its customers. According to Columbia, gas supply in certain portions of the system is insufficient to meet demand when there are episodes of high demand for gas. During such a time, gas from Columbia's main transmission system backflows into the gathering lines to satisfy any gas shortfall. Presently, Nicole is a natural gas production company engaged in the development and management of natural gas wells and associated facilities that it currently owns and operates facilities in West Virginia and Pennsylvania. Nicole asks that the Commission issue a limited jurisdictional certificate that does not include the full panoply of NGA rate and service obligations and which would extend only to the specific activity authorized, leaving the gatherer non-jurisdictional with respect to any remaining gathering activities.

Nicole states that the sale of the Facilities by Columbia to Nicole is in the public convenience and necessity because it will operate the Facilities for the benefit of its product shipper customers and meet the delivery needs of the LDC and its customer who currently receive gas from these facilities. Nicole requests that such action be taken so that the limited certificate can be issued by May 1, 2001.

Questions regarding the details of this proposed application should be directed to Freddie L. Fulson, Manager, Nicole Gas Production, LTD, 513 E. Rich Street, Suite 306, Columbus, Ohio 43215, call (614) 221–5004.

There are two ways to become involved in the Commission's review of this abandonment. First, any person wishing to obtain legal status by becoming a party to the proceedings for this abandonment should, on or before January 2, 2001, file with the Federal Energy Regulatory Commission, 888 First Street, NE., Washington, DC 20426, a motion to intervene in accordance with the requirements of the Commission's Rules of Practice and Procedure (18 CFR 385.214 or 385.211) and the Regulations under the NGA (18 CFR 157.10). A person obtaining party status will be placed on the service list maintained by the Secretary of the Commission and will receive copies of all documents filed by the applicant and by all other parties. A party must submit 14 copies of filings made with the Commission and must mail a copy to the applicant and to every other party in the proceeding. Only parties to the proceeding can ask for court review of Commission orders in the proceeding.

However, a person does not have to intervene in order to have comments considered. The second way to participate is by filing with the Secretary of the Commission, as soon as possible, an original and two copies of comments in support of or in opposition to this abandonment. The Commission will consider these comments in determining the appropriate action to be

taken, but the filing of a comment alone will not serve to make the filer a party to the proceeding. The Commission's rules require that persons filing comments in opposition to the abandonment provide copies of their protests only to the party or parties directly involved in the protest.

Persons who wish to comment only on the environmental review of this abandonment should submit an original and two copies of their comments to the Secretary of the Commission. Environmental commenters will be placed on the Commission's environmental mailing list, will receive copies of the environmental documents, and will be notified of meetings associated with the Commission's environmental review process. Environmental commenters will not be required to serve copies of filed documents on all other parties. However, the non-party commenters will not receive copies of all documents filed by other parties or issued by the Commission (except for the mailing of environmental documents issued by the Commission) and will not have the right to seek court review of the Commission's final order.

The Commission may issue a preliminary determination on non-environmental issues prior to the completion of its review of the environmental aspects of the project. This preliminary determination typically considers such issues as the need for the project and its economic effect on existing customers of the applicant, on other pipelines in the area, and on landowners and communities. For example, the Commission considers the extent to which the applicant may need to exercise eminent domain to obtain rights-of-way for the proposed project and balances that against the non-environmental benefits to be provided by the project. Therefore, if a person has comments on community and landowner impacts from this proposal, it is important either to file comments or to intervene as early in the process as possible.

Comments and protests may be filed electronically via the internet in lieu of paper. See, 18 CFR 385.2001(a)(1)(iii) and the instructions on the Commission's web site at *http://www.ferc.fed.us/efi/doorbell.htm.*

If the Commission decides to set the application for a formal hearing before an Administrative Law Judge, the Commission will issue another notice describing that process. At the end of the Commission's review process, a final Commission order approving or denying abandonment will be issued.

**David P. Boergers,**

*Secretary.*

[FR Doc. 00–31970 Filed 12–14–00; 8:45 am]

BILLING CODE 6717–01–M

---

## DEPARTMENT OF ENERGY

## Federal Energy Regulatory Commission

**[Docket No. EC01–34.000, et al.]**

## Delmarva Power & Light Company, et al.; Electric Rate and Corporate Regulation Filings

December 8, 2000.

Take notice that the following filings have been made with the Commission:

### 1. Delmarva Power & Light Company and Conective Energy Supply, Inc.

[Docket No. EC01–34–000]

Take notice that on December 1, 2000, Delmarva Power & Light Company (Delmarva) and Conectiv Energy Supply, Inc. (CESI) (collectively, the Applicants) tendered an application under the provisions of Section 203 of the Federal Power Act involving the assignment of Delmarva's rights and obligations under two wholesale power sales agreements (Agreements) to CESI.

The Applicants state that copies of this joint application have been served upon Delmarva's counter parties in Agreements and the pertinent state regulatory commissions.

*Comment date:* December 22, 2000, in accordance with Standard Paragraph E at the end of this notice.

### 2. United States Department of Energy—Western Area Power Administration

[Docket No. EF01–5111–000]

Take notice that on December 1, 2000, the Deputy Secretary of the Department of Energy, by Rate Order No. WAPA–88, did confirm and approve on an interim basis, to be effective on January 1, 2001, the Western Area Power Administration's (Western) formula rates under Rate Schedules CAP–FT1, CAP–NFT1, and CAP–NITS1 for the Central Arizona Project 115-kV/230-kV Transmission System.

The formula rates under Rate Schedules CAP–FT1, CAP–NFT1, and CAP–NITS1 will be in effect pending the Federal Energy Regulatory Commission's (Commission) approval of these or of substitute rates on a final basis, ending December 31, 2005.

*Comment date:* December 29, 2000, in accordance with Standard Paragraph E at the end of this notice.

### 3. PSEG Fossil LLC

[Docket No. EG01–42–000]

Take notice that on December 6, 2000, PSEG Fossil LLC (Applicant), having its principal place of business at 80 Park Plaza, T–16, Newark, NJ 07102, filed with the Federal Energy Regulatory Commission (FERC or the Commission) an application for redetermination of exempt wholesale generator (EWG) status pursuant to Part 365 of the Commission's regulations.

The Applicant is a limited liability company formed under the laws of the State of Delaware. The Applicant is engaged, directly or indirectly through an affiliate as defined in Section 2(a)(11)(B) of the Public Utility Holding Company Act of 1935 (''PUHCA''), exclusively in owning or owning and operating eligible electric facilities and participating in project development activities incidental to such eligible electric facilities as authorized under PUHCA. The Applicant owns and operates eligible facilities located in Pennsylvania and New Jersey.

*Comment date:* December 29, 2000, in accordance with Standard Paragraph E at the end of this notice. The Commission will limit its consideration of comments to those that concern the adequacy or accuracy of the application.

### 4. PPL Montour, LLC

[Docket No. EG01–43–000]

Take notice that on December 5, 2000, PPL Montour, LLC (PPL Montour) tendered for filing an Application for Redetermination of Status as an Exempt Wholesale Generator. On December 6, 2000, PPL Montour filed an amendment to its application.

*Comment date:* December 29, 2000, in accordance with Standard Paragraph E at the end of this notice. The Commission will limit its consideration of comments to those that concern the adequacy or accuracy of the application.

### 5. Reliant Energy Mid-Atlantic Power Holdings, L.L.C.

[Docket No. EG01–44–000]

Take notice that on December 4, 2000, Reliant Energy Mid-Atlantic Power Holdings, L.L.C. (Applicant), having its principal place of business at Johnstown, Pennsylvania, filed with the Federal Energy Regulatory Commission (FERC or the Commission) an application for redetermination of exempt wholesale generator (EWG)

status pursuant to Part 365 of the Commission's regulations.

The Applicant is a limited liability company formed under the laws of the State of Delaware. Applicant is engaged, directly or indirectly through an affiliate as defined in Section 2(a)(11)(B) of the Public Utility Holding Company Act of 1935 (PUHCA), exclusively in owning or both owning and operating eligible electric facilities activities incidental to such eligible electric facilities as authorized under PUHCA. Applicant will enter into a lease agreement incidental to its ownership interest in the Keystone Electric Steam Station.

*Comment date:* December 29, 2000, in accordance with Standard Paragraph E at the end of this notice. The Commission will limit its consideration of comments to those that concern the adequacy or accuracy of the application.

**6. Constellation Power Source Generation, Inc.**

[Docket No. EG01–45–000]

Take notice that on December 5, 2000, Constellation Power Source Generation, Inc. (Applicant), having its principal place of business at 111 Market Place, Suite 500, Baltimore, Maryland 21202, filed with the Federal Energy Regulatory Commission (FERC or the Commission) an application for redetermination of exempt wholesale generator (EWG) status pursuant to Part 365 of the Commission's regulations. The Applicant is a Maryland corporation and is engaged, directly or indirectly through an affiliate as defined in Section 2(a)(11)(B) of the Public Utility Holding Company Act of 1935 (''PUHCA''), exclusively in owning or owning and operating eligible electric facilities and participating in project development activities incidental to such eligible electric facilities as authorized under PUHCA. The Applicant owns and operates eligible facilities located in Maryland and Pennsylvania.

*Comment date:* December 29, 2000, in accordance with Standard Paragraph E at the end of this notice.

**7. Western Resources, Inc.**

[Docket No. ER01–592–000]

Take notice that on December 5, 2000, Western Resources, Inc. (Western Resources), tendered for filing a Notification of Change in Status and Petition for Acceptance of Revised Market Rate Schedules in anticipation of Western Resources' proposed merger with Public Service Company of New Mexico, all as more fully described in the Application.

*Comment date:* December 26, 2000, in accordance with Standard Paragraph E at the end of this notice.

**8. California Independent System Operator Corporation**

[Docket No. ER01–594–000]

Take notice that on December 5, 2000, the California Independent System Operator Corporation, tendered for filing a Meter Service Agreement for ISO Metered Entities between the ISO and Riverside County Waste Management Department for acceptance by the Commission.

The ISO states that this filing has been served on Riverside County Waste Management Department and the California Public Utilities Commission.

The ISO is requesting waiver of the 60-day notice requirement to allow the Meter Service Agreement for ISO Metered Entities to be made effective November 30, 2000.

*Comment date:* December 26, 2000, in accordance with Standard Paragraph E at the end of this notice.

**9. Alabama Electric Marketing, LLC**

[Docket No. ER01–596–000]

Take notice that on December 5, 2000, Alabama Electric Marketing, LLC, 1044 North 115 Street, Suite 400, Omaha, Nebraska 68154 (AEM), tendered for filing with the Federal Energy Regulatory Commission an application for blanket authorization and certain waivers under regulations of the Commission, and for an order accepting its FERC Electric Rate Schedule No. 1 to be effective the earlier of February 5, 2001, or the date of a Commission order granting approval of this Rate Schedule.

AEM intends to engage in electric power and energy transactions as a marketer and a broker. In transactions where AEM purchases power, including capacity and related services from electric utilities, qualifying facilities, and independent power producers, and resells such power to other purchasers, AEM will be functioning as a marketer. In AEM's marketing transactions, AEM proposes to charge rates mutually agreed upon by the parties. In transactions where AEM does not take title to electric power and/or energy, AEM will be limited to the role of a broker and will charge a fee for its services. AEM is not in the business of producing electric power nor does it contemplate acquiring title to any electric power transmission facilities.

*Comment date:* December 26, 2000, in accordance with Standard Paragraph E at the end of this notice.

**10. Central Power and Light Company**

[Docket No. ER01–279–001]

Take notice that on December 5, 2000, Central Power and Light Company (CPL) tendered for filing First Revised Rate Schedule No. 104, an Interconnection Agreement between CPL and Sharyland Utilities, L.P. (Sharyland), to comply with the Commission's order of November 20, 2000 in the above-referenced docket.

Central Power and Light Company has served a copy of this compliance filing on Sharyland and the Public Utility Commission of Texas.

*Comment date:* December 26, 2000, in accordance with Standard Paragraph E at the end of this notice.

**11. Boston Edison Company**

[Docket No. ER01–575–000]

Take notice that on December 4, 2000, Boston Edison Company (Boston Edison), tendered for filing a Standstill Agreement between itself and New England Power Company (NEP), as successor-in-interest to Montaup Electric Company (Montaup). The Standstill Agreement extends through February 5, 2001 the time in which NEP may institute a legal challenge to the 1998 true-up bill under Boston Edison's FERC Rate Schedule No. 69, governing sales to Montaup from the Pilgrim Nuclear Station.

Boston Edison requests waiver of the Commission's notice requirement to allow the Standstill Agreement to become effective December 5, 2000.

*Comment date:* December 26, 2000, in accordance with Standard Paragraph E at the end of this notice.

**12. Cinergy Services, Inc.**

[Docket No. ER01–580–000]

Take notice that on December 5, 2000, Cinergy Services, Inc. (Cinergy), tendered for filing a Service Agreement under Cinergy's Resale, Assignment or Transfer of Transmission Rights and Ancillary Service Rights Tariff (the Tariff) entered into between Cinergy and Allegheny Energy Supply Company, LLC. This Service Agreement has been executed by both parties and is to replace the existing unexecuted Service Agreement.

*Comment date:* December 26, 2000, in accordance with Standard Paragraph E at the end of this notice.

**13. Cinergy Services, Inc.**

[Docket No. ER01–581–000]

Take notice that on December 5, 2000, Cinergy Services, Inc. (Cinergy), tendered for filing a Service Agreement

under Cinergy's Resale, Assignment or Transfer of Transmission Rights and Ancillary Service Rights Tariff (the Tariff) entered into between Cinergy and Florida Power & Light Company. This Service Agreement has been executed by both parties and is to replace the existing unexecuted Service Agreement.

*Comment date:* December 26, 2000, in accordance with Standard Paragraph E at the end of this notice.

**14. Cinergy Services, Inc.**

[Docket No. ER01–582–000]

Take notice that on December 5, 2000, Cinergy Services, Inc. (Cinergy), tendered for filing a Service Agreement under Cinergy's Resale, Assignment or Transfer of Transmission Rights and Ancillary Service Rights Tariff (the Tariff) entered into between Cinergy and Coastal Merchant Energy, L.P., formerly known as Engage Energy US, L.P. This Service Agreement has been executed by both parties and is to replace the existing unexecuted Service Agreement.

*Comment date:* December 26, 2000, in accordance with Standard Paragraph E at the end of this notice.

**15. Cinergy Services, Inc.**

[Docket No. ER01–583–000]

Take notice that on November 28, 2000, Cinergy Services, Inc. (Cinergy), tendered for filing a Service Agreement under Cinergy's Resale, Assignment or Transfer of Transmission Rights and Ancillary Service Rights Tariff (the Tariff) entered into between Cinergy and Entergy Power Marketing Corp. This Service Agreement has been executed by both parties and is to replace the existing unexecuted Service Agreement.

*Comment date:* December 26, 2000, in accordance with Standard Paragraph E at the end of this notice.

**16. Cinergy Services, Inc.**

[Docket No. ER01–584–000]

Take notice that on December 5, 2000, Cinergy Services, Inc. (Cinergy) tendered for filing a Service Agreement under Cinergy's Resale, Assignment or Transfer of Transmission Rights and Ancillary Service Rights Tariff (the Tariff) entered into between Cinergy and Williams Energy Marketing & Trading Company. This Service Agreement has been executed by both parties and is to replace the existing unexecuted Service Agreement.

*Comment date:* December 26, 2000, in accordance with Standard Paragraph E at the end of this notice.

**17. Cinergy Services, Inc.**

[Docket No. ER01–587–000]

Take notice that on December 5, 2000, Cinergy Services, Inc. (Provider), tendered for filing a Firm Point-To-Point Service Agreement under Cinergy's Open Access Transmission Service Tariff (OATT) entered into between Provider and Cinergy Services, Inc., (Customer).

Provider and Customer are requesting an effective date of January 1, 2001.

*Comment date:* December 26, 2000, in accordance with Standard Paragraph E at the end of this notice.

**18. Cinergy Services, Inc.**

[Docket No. ER01–588–000]

Take notice that on December 5, 2000, Cinergy Services, Inc. (Cinergy), tendered for filing a Service Agreement under Cinergy's Resale, Assignment or Transfer of Transmission Rights and Ancillary Service Rights Tariff (the Tariff) entered into between Cinergy and Alliant Energy Corporate Services, Inc., (AECS).

Cinergy and AECS are requesting an effective date of November 1, 2000.

*Comment date:* December 26, 2000, in accordance with Standard Paragraph E at the end of this notice.

**19. Cinergy Services, Inc.**

[Docket No. ER01–589–000]

Take notice that on December 5, 2000, Cinergy Services, Inc. (Cinergy), tendered for filing a Service Agreement under Cinergy's Resale, Assignment or Transfer of Transmission Rights and Ancillary Service Rights Tariff (the Tariff) entered into between Cinergy and Strategic Energy L.L.C., (Strategic).

Cinergy and Strategic are requesting an effective date of November 1, 2000.

*Comment date:* December 26, 2000, in accordance with Standard Paragraph E at the end of this notice.

**20. Central Vermont Public Service Corporation**

[Docket No. ER01–590–000]

Take notice that on November 30, 2000, Central Vermont Public Service Corporation (CVPS), tendered for filing a letter stating that CVPS will not file a Forecast 2001 Cost Report for FERC Electric Tariff, Original Volume No. 3. No customers will take Tariff No. 3 transmission service during 2001 because such service was terminated effective December 31, 1999. CVPS provides transmission service under its FERC Electric Tariff, First Revised Volume No. 7.

*Comment date:* December 21, 2000, in accordance with Standard Paragraph E at the end of this notice.

**21. Central Vermont Public Service Corporation**

[Docket No. ER01–591–000]

Take notice that on November 30, 2000, Central Vermont Public Service Corporation (CVPS), tendered for filing a letter stating that CVPS will not file a Forecast 2001 Cost Report for FERC Electric Tariff, Original Volume No. 4, since there are no customers expected to take such service.

*Comment date:* December 21, 2000, in accordance with Standard Paragraph E at the end of this notice.

**22. California Independent System Operator Corporation**

[Docket No. ER01–593–000]

Take notice that on December 5, 2000, the California Independent System Operator Corporation, tendered for filing a Participating Generator Agreement between the ISO and Riverside County Waste Management Department for acceptance by the Commission.

The ISO states that this filing has been served on Riverside County Waste Management Department and the California Public Utilities Commission.

The ISO is requesting waiver of the 60-day notice requirement to allow the Participating Generator Agreement to be made effective November 30, 2000.

*Comment date:* December 26, 2000, in accordance with Standard Paragraph E at the end of this notice.

**23. Northern Indiana Public Service Company**

[Docket No. ER01–595–000]

Take notice that on December 5, 2000, Northern Indiana Public Service Company (Northern Indiana), tendered for filing a Service Agreement pursuant to its Wholesale Market-Based Rate Tariff with the Michigan Public Power Agency (MPPA).

Northern Indiana has requested an effective date of December 1, 2000.

Copies of this filing have been sent to MPPA, the Indiana Utility Regulatory Commission, and the Indiana Office of Utility Consumer Counselor.

*Comment date:* December 26, 2000, in accordance with Standard Paragraph E at the end of this notice.

**24. Puget Sound Energy, Inc.**

[Docket No. ER01–577–000]

Take notice that on December 4, 2000, Puget Sound Energy, Inc., as Transmission Provider, tendered for

filing a Service Agreement for Firm Point-To-Point Transmission Service and a Service Agreement for Non-Firm Point-To-Point Transmission Service with Williams Energy Marketing & Trading Company (Williams), as Transmission Customer.

A copy of the filing was served upon Williams.

*Comment date:* December 26, 2000, in accordance with Standard Paragraph E at the end of this notice.

**25. UGI Development Company**

[Docket No. ER01–597–000]

Take notice that on December 5, 2000, UGI Development Company (UGID) tendered for filing a revised Wholesale Market-Based Rate Tariff. UGID requests an effective date of December 6, 2000. UGID also tendered for filing a Service Agreement under the revised Market-Based Rate Tariff for service to UGI Utilities.

*Comment date:* December 26, 2000, in accordance with Standard Paragraph E at the end of this notice.

**26. Orion Power MidWest, L.P.**

[Docket No. ER01–606–000]

Take notice that on December 7, 2000, Orion Power MidWest, L.P. (Orion Power MidWest), tendered for filing with the Federal Energy Regulatory Commission an Ancillary Services Agreement with Duquesne Light Company, designated as FERC Rate Schedule No. 10 for the sale of Regulation and Frequency Response, Operating Reserve—Spinning Reserve Service, Operating Reserve—Supplemental Reserve Service, and Reactive Supply and Voltage Control.

*Comment date:* December 22, 2000, in accordance with Standard Paragraph E at the end of this notice.

**Standard Paragraphs**

E. Any person desiring to be heard or to protest such filing should file a motion to intervene or protest with the Federal Energy Regulatory Commission, 888 First Street, N.E., Washington, D.C. 20426, in accordance with Rules 211 and 214 of the Commission's Rules of Practice and Procedure (18 CFR 385.211 and 385.214). All such motions or protests should be filed on or before the comment date. Protests will be considered by the Commission in determining the appropriate action to be taken, but will not serve to make protestants parties to the proceeding. Any person wishing to become a party must file a motion to intervene. Copies of these filings are on file with the Commission and are available for public inspection. This filing may also be viewed on the Internet at http://www.ferc.fed.us/online/rims.htm (call 202–208–2222 for assistance).

**David P. Boergers,**

*Secretary.*

[FR Doc. 00–31955 Filed 12–14–00; 8:45 am]

BILLING CODE 6717–01–P

## ENVIRONMENTAL PROTECTION AGENCY

**[FRL–6917–4]**

## Agency Information Collection Activities: Proposed Collection; Comment Request; Control Technology Determinations for Constructed and Reconstructed Major Sources of Hazardous Air Pollutants

**AGENCY:** Environmental Protection Agency (EPA).

**ACTION:** Notice.

**SUMMARY:** In compliance with the Paperwork Reduction Act (44 U.S.C. 3501 *et seq.*), this document announces that EPA is planning to submit the following proposed and continuing Information Collection Request (ICR) to the Office of Management and Budget (OMB): Control technology determinations for constructed and reconstructed major sources of hazardous air pollutants, EPA ICR #1658.02, OMB #2060–0284, expiration date February 28, 2001. Before submitting the ICR to OMB for review and approval, EPA is soliciting comments on specific aspects of the proposed information collection as described below.

**DATES:** Comments must be submitted on or before Feburary 13, 2001.

**ADDRESSES:** Send all comments on this ICR to Ms. Pamela J. Smith, Information Transfer and Program Integration Division (MD–12), Office of Air Quality Planning and Standards, U.S. Environmental Protection Agency, Research Triangle Park, North Carolina 27711. Interested persons may obtain a copy of the ICR without charge by contacting Ms. Smith at (919) 541–0641 or E-mail ''smith.pam@epa.gov'' and refer to EPA ICR Number 1658.02.

**FOR FURTHER INFORMATION CONTACT:** Kathy Kaufman at (919) 541–0102 and E-mail ''kaufman.kathy@epa.gov.''

**SUPPLEMENTARY INFORMATION:**

*Affected Entities:* Entities potentially affected by this action are those who must submit an application for a permit to construct or reconstruct a major source of hazardous air pollution, permitting agencies who review the permit applications, and EPA staff who review some permitting authority decisions.

*Title:* Information Collection Request for 40 CFR Part 63 Regulations Governing Constructed and Reconstructed Major Sources, EPA ICR Number 1658.02, OMB Control Number 2060–0284, Expiration date February 28, 2001.

*Abstract:* Section 112(g)(2)(B) of the Clean Air Act as amended in 1990 requires that maximum achievable control technology (MACT) standards be met by constructed or reconstructed major sources of hazardous air pollutants. Where no applicable emission limit has been set, the MACT determination shall be made on a case-by-case basis.

In order to receive a construction permit for a constructed or reconstructed major source, the applicant must conduct the necessary research, perform the appropriate analyses and prepare the permit application with documentation to demonstrate that their project meets all applicable statutory and regulatory requirements. Specific activities and requirements are listed and described in the Supporting Statement for the ICR.

Permitting agencies, either State, local or Federal, review the permit application to affirm the proposed constructed or reconstructed major source will comply with the Clean Air Act (Act) and applicable regulations. The permitting Agency then provides for public review of the proposed project and issues the permit based on its consideration of all technical factors and public input. The EPA, more broadly, reviews a fraction of the total applications and audits the State and local programs for their effectiveness. Consequently, information prepared and submitted by the source is essential for the source to receive a permit, and for Federal, State and local environmental agencies to adequately review the permit application and thereby properly administer and manage the section 112(g) programs.

To facilitate adequate public participation, information is submitted by sources as a part of their permit application and should generally be a matter of public record. See sections 165(a)(2) and 110(a)(2)(C), (D), and (F) of the Act. Notwithstanding, to the extent that the information required for the completeness of a permit is proprietary, confidential, or of a nature that it could impair the ability of the source to compete in the marketplace, that information is collected and handled according to EPA's policies set forth in title 40, chapter 1, part 2, subpart B—Confidentiality of Business Information

(see 40 CFR part 2). See also section 114(c) of the Act.

An agency may not conduct or sponsor, and a person is not required to respond to, a collection of information unless it displays a currently valid OMB control number. The OMB control numbers for EPA's regulations are listed in 40 CFR part 9 and 48 CFR chapter 15.

The EPA would like to solicit comments to:

(i) evaluate whether the proposed collection of information is necessary for the proper performance of the functions of the agency, including whether the information will have practical utility;

(ii) evaluate the accuracy of the agency's estimate of the burden of the proposed collection of information, including the validity of the methodology and assumptions used;

(iii) enhance the quality, utility, and clarity of the information to be collected; and

(iv) minimize the burden of the collection of information on those who are to respond, including through the use of appropriate automated electronic, mechanical, or other technological collection techniques or other forms of information technology, e.g., permitting electronic submission of responses.

*Burden Statement:* The reporting and recordkeeping burden was estimated as follows:

*Number of Respondents:* 3877.

*Frequency of Response:* 1 per respondent.

Burden hours per response:

*Industry:* 150 hours.

*Permitting Agencies:* 80 hours.

Estimated total annual hour burden:

*Industry:* 581,521 hours.

*Permitting Agencies:* 310,144 hours.

*Estimated Annualized Cost Burden:* $6750. per response.

Burden means the total time, effort, or financial resources expended by persons to generate, maintain, retain, or disclose or provide information to or for a Federal agency. This includes the time needed to review instructions; develop, acquire, install, and utilize technology and systems for the purposes of collecting, validating, and verifying information, processing and maintaining information, and disclosing and providing information; adjust the existing ways to comply with any previously applicable instructions and requirements; train personnel to be able to respond to a collection of information; search data sources; complete and review the collection of information; and transmit or otherwise disclose the information.

Dated: December 4, 2000.

**Steven J. Hitte,**

*Acting Director, Information Transfer and Program Integration Division.*

[FR Doc. 00–32032 Filed 12–14–00; 8:45 am]

**BILLING CODE 6560–50–P**

---

## ENVIRONMENTAL PROTECTION AGENCY

**[ER–FRL–6613–6]**

## Environmental Impact Statements; Notice of Availability

*Responsible Agency:* Office of Federal Activities, General Information (202) 564–7167 or www.epa.gov/oeca/ofa

Weekly receipt of Environmental Impact Statements

Filed December 04, 2000 Through December 08, 2000

Pursuant to 40 CFR 1506.9.

*EIS No. 000423, Final EIS, AFS, ID,* Swan Flat Timber Sale, Proposal to Cut and Haul Sawtimber, Caribou National Forest, Land Resource Management Plan (LRMP), Montpelier Ranger District, Bear Lake County, ID, Due: January 16, 2001, Contact: Eric Mattson (208) 847–0375.

*EIS No. 000424, Final EIS, IBW,* El Paso—Las Cruces Regional Sustainable Water Project, To Secure Future Drinking Water Supplies, United States and Mexico, Due: January 16, 2001, Contact: Douglas Echlin (915) 832–7441.

*EIS No. 000425, Final EIS, UAF, WI,* Hardwood Air-to-Surface Gunnery Range Expansion and Associated Airspace Actions, Military Operation Areas (MOA), WI, Due: January 16, 2001, Contact: Harry Knuden (301) 836–8143.

*EIS No. 000426, Final EIS, AFS, ID,* West Mountain North Project, Timber Harvest, Road Construction and Reconstruction), Boise National Forest, Cascade Ranger District, Valley County, ID, Due: January 16, 2001, Contact: David D. Rittenhouse (208) 373–4100.

*EIS No. 000427, Final EIS, AFS, MT,* Taylor Fork Timber Sale and Road Restoration, Implementation, Buck Creek, Taylor Fork Creek and Eldridge Creek, Gallatin National Forest, Madison Ranger, Hebgen Lake Ranger District, Yellow Stone, Gallatin County, MT, Due: January 16, 2001, Contact: Julie Neff-Shea (406) 587–6701.

*EIS No. 000428, Draft EIS, EPA, NC,* New Wilmington Ocean Dredged Material Disposal Site, Designation, Wilmington Harbor, North Carolina State Port and the Military Ocean Terminal (Sunny Point (MOTSU), NC, Due: January 29, 2001, Contact: Gary Collins (404) 562–9395.

*EIS No. 000429, Final EIS, AFS, ID,* Brownlee Vegetation and Access Management Project, Implementation, Weiser Ranger District, Payette National Forest, Washington County, ID, Due: January 16, 2001, Contact: John Baglien (208) 549–4200.

*EIS No. 000430, Final EIS, FHW, NV,* Reno Railroad Corridor, Implementation of the Freight Railroad Grade Separation Improvements in the Central Portion of the City of Reno, Washoe County, NV, Due: January 16, 2001, Contact: John T. Price (775) 687–1204.

*EIS No. 000431, Draft EIS, BLM, WY,* North Jacobs Ranch Coal Lease Application (WYW 146744), Federal Coal Tract, Located in the Powder River Basin, Campbell County, WY, Due: February 13, 2001, Contact: Nancy Doelger (307) 261–7627.

*EIS No. 000432, Draft EIS, NPS, CA,* Santa Monica Mountains National Recreation Area General Management Plan, Implementation, Los Angeles County, CA, Due: February 28, 2001, Contact: Alan Schmierer (415) 427–1441.

*EIS No. 000433, Final EIS, IBR, CA,* East Bay Municipal Utility District, Supplemental Water Supply Project, American River Division of the Central Valley Project (CVP), Sacramento County, CA, Due: January 16, 2001, Contact: Rob Schroeder (916) 988–1707.

*EIS No. 000434, Final EIS, BIA, WA,* Colville Indian Reservation Integrated Resource Management Plan, Implementation, Colville Indian Reservation, Okanogan and Ferry Counties, WA, Due: January 16, 2001, Contact: James R. Orwin (509) 634–2308.

*EIS No. 000435, Draft EIS, IBR, WA,* Keechelus Dam Project, Safety of Dams Modification, Implementation, COE Section 404 Permit, Yakima, Kittitas, Benton, and Klickitat Counties, WA, Due: February 09, 2001, Contact: Dave Kaumheimer (509) 575–5848.

*EIS No. 000436, Draft EIS, AFS, CO,* Baylor Park Blowdown Project, Salvage and Treat Down and Damaged Timber, To Reduce Impact of Spruce Beetles, Implementation, White River National Forest, Sopris and Rifle Ranger Districts, Garfield, Mesa, and Pitkin Counties, CO, Due: January 29, 2001, Contact: Jan Spencer (970) 945–2521.

*EIS No. 000437, Final EIS, FAA, RI, T. F.* Green Airport Project, To Implement the Part 150 Noise

Abatement Procedures in a Safe and Efficient Manner, Warwick County, RI, Due: January 16, 2001, Contact: Theresa Flieger (781) 238–7524.

*EIS No. 000438, Revised Draft EIS, FTA, CA,* Orange County Centerline Project, Transportation Improvements, Revised Alternatives, Advanced Rail Transit in the Heart of Orange County, CA, Due: January 29, 2001, Contact: A. Joseph Ossi (202) 366–1613.

*EIS No. 000439, Draft EIS, JUS, CA,* Pinal County Private Detention Facility, To Develop and Operate a Pre-Trail Detention Facility, Pinal County, CA, Due: January 29, 2001, Contact: Charles Coburn (202) 307–9045.

*EIS No. 000440, Final EIS, DOE, TN, WA, ID, Programmatic*—Accomplishing Expanded Civilian Nuclear Energy Research and Development and Isotope Production Missions in the United States, Including the Role of the Fast Flux Test, ID, TN, WA, Due: January 16, 2001, Contact: Colette Brown (877) 562–4593.

*EIS No. 000441, Draft EIS, NOA, HI, GU, AS,* Pelagic Fisheries of the Western Pacific Region, Fishery Management Plan, To Analyze Longline Fisheries, Commercial Troll and Recreational Troll Fisheries, Commercial Pelagic Handliners and Commerical Pole and Line Skipjack Fishery, Hawaii, American Samoa, Guam and Commonwealth of the Northern Mariana Island, Due: January 29, 2001, Contact: Charles Karnella (808) 973–2941.

*EIS No. 000442, Final Supplement, UAF, FL,* Homestead Air Force Base (AFB) Disposal and Reuse, Implementation, Dade County, FL, Due: January 16, 2001, Contact: Doug Heady (703) 693–7314.

*EIS No. 000443, Final EIS, DOD, AK, ND, AS,* National Missile Defense (N.D.) Deployment System, Selection of Possible Deployment Sites: AK, AS and ND, Due: January 16, 2001, Contact: Julia Hudson (256) 955–4822.

*EIS No. 000444, Final EIS, IBR, AZ, NV, CA,* Colorado River Interim Surplus Criteria, To Determine Water Surplus for use within the States Arizona, California and Nevada (from 2001 through 2015), Colorado River Basin, AZ, CA and NV, Due: January 16, 2001, Contact: Jayne Harkens (702) 293–8785.

*EIS No. 000445, Final EIS, AFS, WA, ID, OR, MT,* Eastside Ecosystem Based Lands Management Plan, Implementation, Interior Columbia Basin Ecosystem Management Project, WA, OR, ID and MT, Due: January 16, 2001, Contact: Susan Giannettino (208) 334–1770.

The US Department of the Interior's Bureau of Land Management and Department of Agriculture's Forest Service are Joint Lead Agencies for this project.

*EIS No. 000446, Draft EIS, TVA, MS,* Kemper County Combustion Turbine Plant, Construction and Operation, Addition of Electric General Peaking Capacity at Greenfield Sites, NPDES Permit, Kemper County, MS, Due: January 29, 2001, Contact: Roy V. Carter (256) 386–2832.

**Amended Notices**

*EIS No. 000393, Draft EIS, BLM, OR,* Rogue National Wild and Scenic River Hellgate Recreation Area (Applegate River to Grave Creek) Management Plan, Implementation, Bedford District, Josephine County, OR, Due: February 24, 2001, Contact: Cori Cooper (541) 618–2428. Published FR–11–24–00—Correction to Title.

*EIS No. 000420, Draft Supplement, NOA,* Atlantic Sea Scallop Fishery Management Plan (FMP), Updated Information, Framework Adjustment 14 to adjust the annual Amendment 7 day-at-sea allocation for 2001 and 2002 and to re-open portions of the Hudson Canyon and Virginia/North Carolina Areas for Scallop Fishing, Due: January 24, 2001, Contact: Patricia Kurkal (978) 281–9300. Published FR 12–08–00 Correction to Title and Contact Name and Phone.

Dated: December 12, 2000.

**Joseph C. Montgomery,**

*Director, NEPA Compliance Division, Office of Federal Activities.*

[FR Doc. 00–32044 Filed 12–14–00; 8:45 am]

BILLING CODE 6560–50–P

---

## ENVIRONMENTAL PROTECTION AGENCY

**[ER–FRL–6613–7]**

## Environmental Impact Statements and Regulations; Availability of EPA Comments

Availability of EPA comments prepared pursuant to the Environmental Review Process (ERP), under Section 309 of the Clean Air Act and Section 102(2)(c) of the National Environmental Policy Act as amended. Requests for copies of EPA comments can be directed to the Office of Federal Activities at (202) 567–7167.

An explanation of the ratings assigned to draft environmental impact statements (EISs) was published in FR dated April 14, 2000 (65 FR 20157).

**Draft EISs**

ERP No. D–AFS–J65326–MT Rating EC2, Ashland Post-Fire Project, Proposal to Implement Restoration Activities to Maintain Watershed, Custer National Forest, Powder River and Rosebud Counties, MT.

*Summary:* EPA expressed concern regarding sediment production water quality impacts and aquatic monitoring. EPA recommended optimal balancing of environmental and resource trade-offs by developing a modified preferred alternative that reduces sediment production. ERP No. D–BLM–B65022–MA Rating LO, New Bedford Whaling National Historical Park, General Management Plan, Implementation, Bristol County, MA.

*Summary:* EPA had no objections to the project. ERP No. D–BLM–J67030–UT Rating EC2, 3R Minerals Coal Bed Canyon Mine Plan, Approval, Grand Staircase-Escalante National Monument, Garfield County, UT.

*Summary:* EPA expressed concern regarding potential impacts due to future expansion of this titanium and zirconium mineral resource. EPA requested additional information about the economic viability.

ERP No. DA–JUS–G11010–00 Rating LO, PROGRAMMATIC—Revised Draft Supplemental EIS US Naturalization Service (INS) and US Joint Task Force-Six (JTF–6) Activities Along the US/Mexico Border from Brownsville Texas to San Diego, California.

*Summary:* EPA expressed no concerns regarding the revised document.

**Final EISs**

ERP No. F–AFS–J67028–MT, Rocky Mountain Front Mineral Withdrawal, Implementation, Helena and Lewis and Clark National Forests, Great Falls, MT.

*Summary:* ERP No. F–AFS–L65336–ID, Brown Creek Timber Sale Project, Implementation, Payette National Forest, New Meadow Ranger District, Adam County, ID.

*Summary:* No formal comment letter was sent to the preparing agency.

*ERP No. F–BOP–K80041–CA*

Lassen County Federal Correctional Institution (FCI), Construction and Operation, To House Median-Security Inmates and Federal Prison Camp, Possible Site is Southwest Site, Lassen County, CA.

*Summary:* No formal comment letter was sent to the preparing agency.

*ERP No. F–COE–E36178–00*

Wolf River Ecosystem Restoration, Memphis, Tennessee Feasibility Study, Marshall, Benton and Tippah Counties,

MS and Shelby, Fayette and Harderman, TN.

*Summary:* Structural measures of the proposed action will significantly improve fish and wildlife habitat in the watershed. Therefore, EPA has no objection to the proposed action.

Dated: December 12, 2000.

**Joseph C. Montgomery,**

*Director, NEPA Compliance Division, Office of Federal Activities.*

[FR Doc. 00–32045 Filed 12–14–00; 8:45 am]

**BILLING CODE 6560–50–U**

---

## ENVIRONMENTAL PROTECTION AGENCY

**[FRL–6917–8]**

## Mobile Source Outreach Assistance Competition Fiscal Year 2001: Solicitation Notice

**AGENCY:** Environmental Protection Agency (EPA).

**ACTION:** Notice.

**SUMMARY:** Today's notice announces the availability of funding and solicits proposals from State, local, multi-State, and tribal air pollution control agencies for mobile sources-related public education and outreach projects. The funding will be allocated by EPA's Office of Transportation and Air Quality (OTAQ) through the competitive process described in this notice.

**DATES:** The deadline for submitting final proposals is Friday, March 2, 2001. To allow for efficient management of the competitive process, OTAQ is requesting agencies to submit an informal intent to apply by January 7, 2001. (Instructions for submitting final proposals and intents to apply are found in section X. below.)

**ADDRESSES:** This proposal can also be found in two places on the Office of Transportation and Air Quality Web Page: ''www.epa.gov/OTAQ/'' click on ''What's New'' or ''www.epa.gov/OTAQ/rfp.htm''. Addresses for submitting final proposals can be found in section X. below.

**FOR FURTHER INFORMATION CONTACT:** Susan Bullard, Director of Outreach, USEPA Office of Transportation and Air Quality (OTAQ), 1200 Pennsylvania Avenue NW, (mail code 6406J), Washington, DC, 20460. Telephone (202) 564–9856; Fax (202) 565–2085. Or email ''bullard.susan@epa.gov''

**SUPPLEMENTARY INFORMATION:**

**Contents by Section**

I. Overview and Deadlines
II. Eligible Organizations
III. Funding Issues
IV. Program Emphasis
V. Selection Criteria
VI. Evaluation and Selection
VII. Proposals
VIII. Current OTAQ/Section 105 Funded Outreach Projects
IX. Other Items of Interest
X. How to Apply
XI. EPA Regional Grant Coordinators
XII. OTAQ Program Contact

**Deadline for informal Intent to Apply—January 7, 2001**

**Deadline for Final Proposal—Friday midnight, March 2, 2001**

This proposal can also be found on the Office of Transportation and Air Quality Web Page:

www.epa.gov/otaq/ Click on ''What's New''
or
''www.epa.gov/OTAQ/rfp.htm''

**Mobile Source Outreach Assistance Agreements 2001: Request for Proposals**

**Section I. Overview and Deadlines**

*A. Overview*

Over the past four years, EPA's Office of Transportation and Air Quality (OTAQ) has entered into agreements and established partnerships with a number of organizations to (1) provide national support for community-based mobile source public education efforts supporting implementation of the Clean Air Act and, (2) encourage responsible choices for organizational and individual actions through public education. Current OTAQ/Section 105-Funded Outreach Projects are listed on the OTAQ web site ''www.epa.gov/otaq/whatsnew'' and emphasize transportation choices to reduce vehicle miles traveled; education of vehicle owners and drivers of the future; alternative fuels; car care and the role of the automotive technician; outreach to ethnic populations; environmental justice; and, related projects such as ozone mapping and small engines. EPA's Office of Transportation and Air Quality has set aside funds from the State and Tribal Assistance Grants (STAG) account to provide support to community-based mobile source-related projects. This Notice solicits proposals for public education and outreach projects which directly support state and local air management organizations in their efforts to improve air quality from mobile sources. Proposals will be accepted from state, local, tribal and multi-state air management agencies which are identified as such under Section 302(b) of the Clean Air Act.

Interested persons can also obtain copies of this solicitation at no charge by accessing the OTAQ Website at ''www.epa.gov/otaq/'' Click on ''What's New'' or ''www.epa.gov/OTAQ/rfp.htm''.

*B. What Are the Deadlines For This Competition?*

In order to efficiently manage the selection process, the Office of Transportation and Air Quality requests that an informal ''Intent to Apply'' be submitted by January 7, 2001 (Please provide project title or subject and email address for project contact). An ''Intent to Apply'' simply states in the form of e-mail, phone, or fax that your organization intends to submit a proposal to be received by the deadline. Submitting an ''Intent to Apply'' does not commit an organization to submit a final proposal. Those not submitting an Intent to Apply may still apply by the deadline. *The deadline for final proposals (original and six copies) is Friday, March 2, 2001.* The Office of Transportation and Air Quality expects to complete the Evaluation/Selection process in mid-April, 2001.

**Section II. Eligible Organizations**

*C. Who Is Eligible to Submit Proposals?*

According to funding policies associated with the State and Tribal Assistance Grants regulations (STAG funds), proposals can be accepted only from air pollution control agencies as defined under Section 302(b) of the Clean Air Act (for projects to be undertaken which will have replicability to other communities nationally), as well as multi-state organizations supporting Section 302(b) agencies. OTAQ has no discretion over this requirement.

Interested air management, non-governmental or related organizations which are not air pollution control agencies as defined under Section 302(b) of the Clean Air Act are encouraged to create partnerships with eligible organizations. In that situation, the eligible organization would be required to submit the final proposal and serve as the funding recipient if selected.

**Section III. Funding Issues**

*D. What Is the Amount of Available Funding?*

A minimum of $550K.

*E. How Will Funds be Allocated?*

The competition process will be managed by OTAQ and selected cooperative agreements will be awarded by EPA's Regional offices and funded through either Section 103 (for multi-state organizations as defined by law only) or Section 105 authority (state and

local air pollution control agencies.) OTAQ has no discretion over this requirement.

*F. How Many Agreements Will be Awarded?*

Approximately six agreements will be awarded, none to exceed $100,000. The total dollar amount of the final awards must be within available funding.

*G. Are Matching Funds Required?*

Possibly. Clean Air Act Section 105 mandates that eligible agencies provide matching funds of at least 40%. Therefore, if an air pollution control agency submits a proposal for which they do not already have sufficient matching funds, they must include a statement in their proposal indicating that the match could be met if their proposal is selected. Organizations unable to meet a required match must be considered ineligible. (This requirement does not apply to multi state organizations.) Organizations which are unclear as to their matching status are recommended to contact their EPA Regional Grant Coordinator (see Section XII below).

*H. Can Funding be Used to Acquire Services or Fund Partnerships?*

Yes—subgrants and other procurement services are allowed. Because the method used to fund subgrants is not a federal matter, procedures governing your organization's procurement practices must be followed. Please indicate any intent to enter into such agreements in the proposal.

**Section IV. Program Emphasis**

This program is designed to provide seed money to initiate new projects or advance existing projects that are new in some way (e.g. new audiences, new locations, new approaches) rather than grow ongoing projects.

*I. Program Emphasis*

—Voluntary Measures
—Commuter Choice initiatives
—Transportation choices
—Environmental Justice
—Car care (testing, repair, maintenance)
—On Board Diagnostics (OBD)
—Alternative fuels
—Involving youth in mobile source issues/environmental education
—Other mobile source issues (including but not limited to: diesel, particulate matter, heavy duty engines; nonroad engines; and ozone mapping/forecasting.)

**Section V. Selection Criteria**

*J. Primary Criteria*

—Clearly addresses environmental goals of improved air quality from mobile sources
—Demonstrates national or regional applicability/transferability
—Explanation of how project outcomes will be designed for replication in other communities
—Presents a strong public health message
—Demonstrates effectiveness of delivery mechanism to reach targeted audience
—Exhibits clearly-stated and appropriate levels of funding
—Includes effective evaluation methods
—Reflects potential for sustainability

*K. Other Factors to be Considered*

—Innovation in public awareness
—Effectiveness of collaborative activities and partnerships with other stakeholders needed to effectively develop or implement the project
—Integration with existing programs
—Willingness to coordinate with other OTAQ-funded outreach activities

*L. Presentation Criteria*

—Completeness
—Action-oriented
—Clearly-stated goals and objectives
—Reasonable time frames

**Section VI. Evaluation and Selection**

*M. The Evaluation Team is Chosen to Address a Full Range of Mobile Source and EPA Program Expertise*

In addition, each EPA Regional office is given the opportunity to review those proposals generated by eligible organizations within that Region. The Evaluation Team will base its evaluation solely on the criteria referenced in this Notice. Completed evaluations will be referred to a Selection Committee representing OTAQ senior managers and Regional representatives who are responsible for further consideration and final selection. To ensure equity and objectivity throughout the process, the OTAQ Program Contact (listed below) and staff who facilitate the process and participate in pre-application assistance, do not serve as members of either the Evaluation Team or the Selection Committee.

**Section VII. Proposals**

*N. What Must be Included in the Proposal?*

Proposals should be approximately 5–7 pages in length (*please do not include binders or spiral binding*) and must include:

(1) A brief statement that the candidate organization is defined as an air pollution control agency under Section 302(b) of the Clean Air Act;

(2) A statement that any required match will be met;

(3) A concise statement of project background/objectives highlighting relationship to improving air quality from mobile sources;

(4) A detailed project summary—description of specific actions to be undertaken, including estimated time line for each task;

(5) Associated work products to be developed;

(6) Explanation of project benefits;

(7) Detailed explanation of how project outcomes will be designed for replication in other communities;

(8) Description of collaborative activities and partnerships with other stakeholders;

(9) A detailed budget estimate (clearly explain how funds will be used, including estimated cost for each task.) (Note: Budget estimates should include funding for participation in the 3-day Annual Mobile Source Outreach and Partnerships Workshop typically held in Washington, DC in late fall/early winter.);

(10) Projected time frame for project from initiation through completion; and

(11) Project contact(s) (*must* provide name, organization, phone, fax, and e-mail).

*O. Will 2-Year Proposals be Considered?*

Yes. If a proposal with a 2-year project period is submitted, OTAQ requires that the budget and cost estimate be designed to indicate what will be accomplished in each of the first and second years.

*P. May An Eligible Organization Submit More Than One Proposal?*

An organization may submit more than one proposal only if the proposals are for different projects.

*Q. May An Eligible Organization Resubmit a Proposal Which Was Previously Submitted to the Mobile Source Outreach Assistance Competition, But Was Not Selected?*

Yes. The proposals received by OTAQ in previous competitions were generally of very high quality. Clearly, all proposals of merit could not be selected due to limited resources available.

*R. May An Eligible Organization Submit a Proposal for this Fiscal Year, Even if it Were Previously Awarded Funding Under This Program?*

Yes. Applicants awarded funding in previous competitions may submit new proposals to fund a different project. This program is designed to provide

seed money to initiate new projects or advance existing projects that are new in some way (*e.g.* new audiences, new locations, new approaches).

*S. Does This Funding Expire at the End of FY 01?*

No. The statute states that State and Tribal Assistance Grants (STAG) for environmental programs remain available until expended (''no-year money'').

*T. Ineligible Proposals*

Proposals will be determined to be ineligible if: (1) the candidate organization is not currently defined as an air pollution control agency under Section 302(b) of the Clean Air Act; (2) a required match cannot be met; (3) the proposal is incomplete (proposals must address each component outlined in Section VII. N.); or (4) the proposal is postmarked after the deadline.

**Section VIII. Current OTAQ/Section 105 Funded Outreach Projects**

*U. Since this Program is Designed to Fund New Projects (Rather Than Duplicating or Growing Existing Programs), Potential Candidate Organizations are Recommended to Visit the OTAQ Web Site to Identify Projects Already Being Funded*

The item, entitled ''Current OTAQ/Section 105 Funded Outreach Projects,'' can be found at ''www.epa.gov/otaq/ Click on ''What's New'' (scroll to ''added September 14'') and offers a brief sketch of projects funded through the Office of Transportation and Air Quality, either with Section 105 funding (indicated by year of funding) or projects that are intended to be national in scope, supported by OTAQ program funding (indicated by an asterisk ''*''). (Note: Some web sites listed by funded organizations provide helpful information on a variety of air quality efforts being undertaken by the funded organization.)

**Section IX. Other Items of Interest**

*V. Is There Other Information I Should Have Before Applying?*

Yes.

—Submission of an Intent to Apply or a final proposal does not guarantee funding.

—Supplementary information, including letters of recommendation, will not be reviewed by the Evaluators.

—Only those organizations selected will be required to submit a complete ''Application for Federal Assistance and Budget Information'' (SF 424 and SF 424A) to the appropriate EPA Regional Office.

**Section X. How to Apply**

*W. How Do I Apply?*

Informal ''Intents to Apply'' may take the form of email, fax or phone call to the Program Contact listed below. Include organization, contact, phone, email and project title/subject. PLEASE SUBMIT INFORMAL ''INTENTS TO APPLY'' by January 7, 2001.

To be considered eligible, Completed Proposals must be postmarked or received on or before midnight, Friday, March 2, 2001 (original + 6—no binders or spiral binding please!)

Please Pay Special Attention to the Distinction in Addresses for Regular Mail and In-Person Delivery.

Via regular mail to: Susan Bullard, Director of Outreach, US EPA Office of Transportation and Air Quality, 1200 Pennsylvania Avenue NW, Mail Code 6406J, Washington, DC 20460.

Express mail which is to be delivered in-person (FedEx, UPS, Airborne, etc) must be received by no later than midnight on Friday, March 2, 2001 at the following address: Susan Bullard, Director of Outreach, US EPA Office of Transportation and Air Quality, 501 Third Street NW Room 5304D, (202) 564–9856, (202) 564–8991 (backup number for expressed proposals only).

[**Note:** Proposals e-mailed or faxed will serve only as a placeholder, and must be followed by a hard copy original and 6 copies postmarked or received no later than the deadline.]

*Deadline for Completed Final Proposals*

Received or postmarked no later than midnight on Friday, March 2, 2001

**Section XI. EPA Regional Section 105 Grant Coordinators**

| | | |
|---|---|---|
| Region 1 | Paul Bryan | 617–918–1673 |
| Region 2 | Marlon Gonzales | 212–637–3769 |
| Region 3 | Russ Bowen | 215–814–2057 |
| Region 4 | Todd Rinck | 404–562–9062 |
| Region 5 | Robert Miller | 312–353–0396 |
| | Pamela Blakley | 312–886–4447 |
| Region 6 | Rexene Hanes | 214–665–2726 |
| Region 7 | Aaron Zimmerman | 913–551–7333 |
| Region 8 | Scott Lee | 303–312–7094 |
| Region 9 | Jack Colbourn | 415–744–1239 |
| | Valerie Cooper | 415–744–1237 |
| Region 10 | David Debruyn | 206–553–4218 |

**Section XII. OTAQ Program Contact**

Susan Bullard, Director of Outreach, EPA Office of Transportation and Air Quality (OTAQ), 1200 Pennsylvania Avenue, NW., (Mail Code 6406J), Washington, DC 20460, (Phone) 202/564–9856; (Fax) 202/565–2085, ''bullard.susan@epa.gov''.

**Margo Tsirigotis Oge,**

*Director, Office of Transportation and Air Quality.*

[FR Doc. 00–32027 Filed 12–14–00; 8:45 am]

BILLING CODE 6560–50–U

## ENVIRONMENTAL PROTECTION AGENCY

**[OPP–34236; FRL–6759–5]**

## Organophosphate Pesticides; Availability of Interim Risk Management Decision Documents

**AGENCY:** Environmental Protection Agency (EPA).

**ACTION:** Notice.

**SUMMARY:** This notice announces the availability of the interim risk management decision documents for seven organophosphate and carbamate pesticides: Coumaphos, fenitrothion, mevinphos, oxamyl, phostebupirim, propetamphos, and tribufos. These decision documents have been developed as part of the public participation process that EPA and U.S. Department of Agriculture (USDA) are now using for involving the public in the reassessment of pesticide tolerances under the Food Quality Protection Act (FQPA), and the reregistration of individual organophosphate pesticides under the Federal Insecticide, Fungicide, and Rodenticide Act (FIFRA).

**FOR FURTHER INFORMATION CONTACT:** Carol Stangel, Special Review and Reregistration Division (7508C), Office of Pesticide Programs, Environmental

Protection Agency, 1200 Pennsylvania Ave., NW., Washington, DC 20460; telephone number: (703) 308–8007; e-mail address: stangel.carol@epa.gov.

For technical questions on an IRED or TRED listed, contact the appropriate Chemical Review Manager:

| Chemical Name | Case No. | Chemical Review Manager | Telephone No. | e-mail Address |
|---|---|---|---|---|
| Coumaphos | 0018 | Monica Alvarez | (703) 308–8026 | alvarez.monica@epa.gov |
| Fenitrothion | 0445 | Stephanie Nguyen | (703) 605–0702 | nguyen.stephanie@epa.gov |
| Mevinphos | 0250 | Joseph Nevola | (703) 308–8037 | nevola.joseph@epa.gov |
| Oxamyl | 0253 | Carmelita White | (703) 308–7038 | white.carmelita@epa.gov |
| Phostebupirim | (none) | Stacey Milan | (703) 305–2505 | milan.stacey@epa.gov |
| Propetamphos | 2550 | Gary Mullins | (703) 308–8044 | mullins.gary@epa.gov |
| Tribufos | 2145 | Anne Overstreet | (703) 308–8068 | overstreet.anne@epa.gov |

**SUPPLEMENTARY INFORMATION:**

## I. General Information

### *A. Does this Action Apply to Me?*

This action is directed to the public in general, nevertheless, a wide range of stakeholders will be interested in obtaining the interim risk management decision documents for coumaphos, fenitrothion, mevinphos, oxamyl, phostebupirim, propetamphos, and tribufos, including environmental, human health, and agricultural advocates; the chemical industry; pesticide users; and members of the public interested in the use of pesticides on food. Since other entities also may be interested, the Agency has not attempted to describe all the specific entities that may be affected by this action. If you have any questions regarding the applicability of this action to a particular entity, consult the person listed under **FOR FURTHER INFORMATION CONTACT**.

### *B. How Can I Get Additional Information, Including Copies of this Document and Other Related Documents?*

1. *Electronically*. You may obtain electronic copies of this document, and certain other related documents that might be available electronically, from the EPA Internet Home Page at http://www.epa.gov/. On the Home Page select ''Laws and Regulations'', ''Regulations and Proposed Rules,'' and then look up the entry for this document under the ''**Federal Register**—Environmental Documents.'' You can also go directly to the **Federal Register** listings at http://www.epa.gov/fedrgstr/. In addition, copies of the pesticide interim risk management decision documents released to the public may also be accessed at http://www.epa.gov/REDs.

2. *In person*. The Agency has established an official record for this action under docket control numbers OPP–34236 and OPP–34196B for coumaphos, OPP–34197B for fenitrothion, OPP–34215B for mevinphos, OPP–34227A for oxamyl, OPP–34186B for phostebupirim, OPP–34174C for propetamphos, and OPP–34148B for tribufos. The official record consists of the documents specifically referenced in this action, and other information related to this action, including any information claimed as Confidential Business Information (CBI). This official record includes the documents that are physically located in the docket, as well as the documents that are referenced in those documents. The public version of the official record does not include any information claimed as CBI. The public version of the official record, which includes printed, paper versions of any electronic comments submitted during an applicable comment period is available for inspection in the Public Information and Records Integrity Branch (PIRIB), Rm. 119, Crystal Mall #2, 1921 Jefferson Davis Hwy., Arlington, VA, from 8:30 a.m. to 4 p.m., Monday through Friday, excluding legal holidays. The PIRIB telephone number is (703) 305–5805.

## III. What Action is the Agency Taking?

EPA has assessed the risks of coumaphos, fenitrothion, mevinphos, oxamyl, phostebupirim, propetamphos, and tribufos and reached an Interim Reregistration Eligibility Decision (IRED) or a Report on FQPA Tolerance Reassessment Progress and Interim Risk Management Decision for these organophosphate and carbamate pesticides. Provided that risk mitigation measures are adopted, or in some cases without additional risk mitigation, coumaphos, fenitrothion, mevinphos, oxamyl, phostebupirim, propetamphos, and tribufos fit into their own risk cups — their individual, aggregate risks are within acceptable levels.

The interim risk management decision documents for coumaphos, fenitrothion, mevinphos, phostebupirim, propetamphos, and tribufos were made through the organophosphate pesticide pilot public participation process, which increases transparency and maximizes stakeholder involvement in EPA's development of risk assessments and risk management decisions. The pilot public participation process was developed as part of the EPA-USDA Tolerance Reassessment Advisory Committee (TRAC), which was established in April 1998, as a subcommittee under the auspices of EPA's National Advisory Council for Environmental Policy and Technology. A goal of the pilot public participation process is to find a more effective way for the public to participate at critical junctures in the Agency's development of organophosphate pesticide risk assessments and risk management decisions. EPA and USDA began implementing this pilot process in August 1998, to increase transparency and opportunities for stakeholder consultation. The interim risk management decision for oxamyl, a carbamate pesticide, was made through a similar public participation process.

EPA worked extensively with affected parties to reach the decisions presented in the interim risk management decision documents, which conclude the pilot public participation process for coumaphos, fenitrothion, mevinphos, oxamyl, phostebupirim, propetamphos, and tribufos. As part of the pilot public participation process, numerous opportunities for public comment were offered as these interim risk management decision documents were being developed. The coumaphos, fenitrothion, mevinphos, oxamyl, phostebupirim, propetamphos, and tribufos interim risk management decision documents therefore are issued in final form, without a formal public comment period. The docket remains open, however, and any comments submitted in the future will be placed in the public docket.

The risk assessments for coumaphos, fenitrothion, mevinphos, oxamyl,

phostebupirim, propetamphos, and tribufos were released to the public through the following notices published in the **Federal Register**:

1. Notices for coumaphos were published on September 2, 1999 (64 FR 48164) (FRL–6380–9) and April 26, 2000 (65 FR 24468) (FRL–6556–7).

2. Notices for fenitrothion were published on September 2, 1999 (64 FR 48164) (FRL–6380–9) and March 1, 2000 (65 FR 11050) (FRL–6494–8).

3. Notices for mevinphos were published on January 12, 2000 (65 FR 1867) (FRL–6486–9) and June 30, 2000 (65 FR 40631) (FRL–6595–6).

4. A notice for oxamyl was published on June 28, 2000 (65 FR 39898) (FRL–6595–3).

5. Notices for phostebupirim were published on May 26, 1999 (64 FR 28469) (FRL–6083–4) and March 27, 2000 (65 FR 16197) (FRL–6551–4).

6. Notices for propetamphos were published on January 15, 1999 (64 FR 2644) (FRL–6056–9) and December 1, 1999 (64 FR 67263) (FRL–6397–5).

7. Notices for tribufos were published on September 9, 1998 (63 FR 48213) (FRL–6030–2) and September 24, 1999 (64 FR 51755) (FRL–6385–2).

EPA's next step under FQPA is to complete a cumulative risk assessment and risk management decision encompassing all the organophosphate pesticides, which share a common mechanism of toxicity. The interim risk management decision documents on coumaphos, fenitrothion, mevinphos, phostebupirim, propetamphos, and tribufos cannot be considered final until this cumulative assessment is complete. The interim risk management decision document for oxamyl cannot be considered final until EPA completes a cumulative risk assessment and risk management decision for the carbamate pesticides.

When the cumulative risk assessment for all organophosphate pesticides has been completed, EPA will issue its final tolerance reassessment decision for coumaphos, fenitrothion, mevinphos, phostebupirim, propetamphos, and tribufos, and further risk mitigation measures may be needed. Similarly, when the cumulative risk assessment for all carbamate pesticides is completed, the Agency will issue its final tolerance reassessment decision and further risk mitigation may be needed for oxamyl.

**List of Subjects**

Environmental protection, Chemicals, Pesticides and pests.

Dated: December 8, 2000.

**Lois Rossi,**

*Director, Special Review and Reregistration Division, Office of Pesticide Programs.*

[FR Doc. 00–32033 Filed 12–14–00; 8:45 am]

BILLING CODE 6560–50–S

---

## ENVIRONMENTAL PROTECTION AGENCY

**[PF–964A; FRL–6756–3]**

## Notice of Filing a Pesticide Petition to Establish a Tolerance for a Certain Pesticide Chemical in or on Food; Correction

**AGENCY:** Environmental Protection Agency (EPA).

**ACTION:** Notice.

**SUMMARY:** This notice corrects the initial filing of a pesticide petition proposing the establishment of regulations for residues of a certain pesticide chemical in or on various food commodities.

**FOR FURTHER INFORMATION CONTACT:** By mail: Daniel C. Kenny, Fungicides Branch, Registration Division (7505C), Office of Pesticide Programs, Environmental Protection Agency, 1200 Pennsylvania Ave., NW., Washington, DC 20460; telephone number: (703) 305–7546; e-mail address: kenny.dan@epa.gov.

**SUPPLEMENTARY INFORMATION:**

### I. General Information

*A. Does this Action Apply to Me?*

You may be affected by this action if you are an agricultural producer, food manufacturer or pesticide manufacturer. Potentially affected categories and entities may include, but are not limited to:

| Categories | NAICS | Examples of Potentially Affected Entities |
|---|---|---|
| Industry | 111 | Crop production |
| | 112 | Animal production |
| | 311 | Food manufacturing |
| | 32532 | Pesticide manufacturing |

This listing is not intended to be exhaustive, but rather provides a guide for readers regarding entities likely to be affected by this action. Other types of entities not listed in the table could also be affected. The North American Industrial Classification System (NAICS) codes have been provided to assist you and others in determining whether or not this action might apply to certain entities. If you have questions regarding the applicability of this action to a particular entity, consult the person listed under **FOR FURTHER INFORMATION CONTACT**.

*B. How Can I Get Additional Information, Including Copies of this Document and Other Related Documents?*

1. *Electronically*. You may obtain electronic copies of this document, and certain other related documents that might be available electronically, from the EPA Internet Home Page at http://www.epa.gov/. To access this document, on the Home Page select ''Laws and Regulations,'' ''Regulations and Proposed Rules,'' and then look up the entry for this document under the ''**Federal Register**—Environmental Documents.'' You can also go directly to the **Federal Register** listings at http://www.epa.gov/fedrgstr/.

2. *In person*. The Agency has established an official record for this action under docket control number PF–964A. The official record consists of the documents specifically referenced in this action, any public comments received during an applicable comment period, and other information related to this action, including any information claimed as confidential business information (CBI). This official record includes the documents that are physically located in the docket, as well as the documents that are referenced in those documents. The public version of the official record does not include any information claimed as CBI. The public version of the official record, which includes printed, paper versions of any electronic comments submitted during an applicable comment period, is available for inspection in the Public Information and Records Integrity Branch (PIRIB), Rm. 119, Crystal Mall #2, 1921 Jefferson Davis Highway, Arlington, VA, from 8:30 a.m. to 4 p.m., Monday through Friday, excluding legal holidays. The PIRIB telephone number is (703) 305–5805.

### II. What Action is the Agency Taking?

EPA received a pesticide petition from the Rohm and Haas Company proposing the establishment and/or amendment of regulations for residues of the pesticide chemical zoxamide (RH-117281 Technical) benzamide-3,5-dichloro-*N*-(3-chloro-1-ethyl-1-methyl-2-oxopropyl)-4-methyl in or on the raw agricultural commodities tomatoes and cucurbits at 2 parts per million. This notice of filing of pesticide petition was published in the **Federal Register** on August 24, 2000. The notice of filing listed the wrong petition number. Therefore, EPA is issuing this correction to correct the petition number as follows:

In FR Doc. 00–21674, published in the **Federal Register** of August 24, 2000 at page 51612, change the pesticide number that now reads ''PP 9F5058'' and appears in the middle column of page 51613, to read ''PP 0F6093''.

**List of Subjects**

Environmental protection, Agricultural commodities, Feed additives, Food additives, Pesticides and pests, Reporting and recordkeeping requirements.

Dated: December 6, 2000.

**James Jones,**

*Director, Registration Division, Office of Pesticide Programs.*

[FR Doc. 00–32034 Filed 12–14–00; 8:45 a.m.]

BILLING CODE 6560–50–S

## ENVIRONMENTAL PROTECTION AGENCY

**[OPP–50876; FRL–6757–8]**

## Experimental Use Permit; Receipt of Application Regarding a Transgenic Plant-Pesticide

**AGENCY:** Environmental Protection Agency (EPA).

**ACTION:** Notice.

**SUMMARY:** This notice announces receipt of an application from Mycogen Seeds c/o Dow AgroSciences LLC, 9330 Zionsville Road, Indianapolis, IN 46268, to amend 68467–EUP–2 an experimental use permit (EUP) for the plant-pesticide Bacillus thuringiensis delta endotoxin as produced in corn by a cry1F gene and its controlling sequences as found on plasmid insert PHI8999. The Agency has determined that the application may be of regional and national significance. Therefore, in accordance with 40 CFR 172.11(a), the Agency is soliciting comments on this application.

**DATES:** Comments, identified by docket control number OPP–50876, must be received on or before January 16, 2001.

**ADDRESSES:** Comments and data may be submitted by mail, electronically, or in person. Please follow the detailed instructions for each method as provided in Unit I. of the **SUPPLEMENTARY INFORMATION.** To ensure proper receipt by EPA, it is imperative that you identify docket control number OPP–50876 in the subject line on the first page of your response.

**FOR FURTHER INFORMATION CONTACT:** By mail: Mike Mendelsohn, Biopesticides and Pollution Prevention Division (7511C), Office of Pesticide Programs, Environmental Protection Agency, 1200 Pennsylvania Ave., NW., Washington, DC 20460; telephone number: (703) 308–8715; e-mail address: mendelsohn.mike@epa.gov.

**SUPPLEMENTARY INFORMATION:**

### I. General Information

*A. Does this Action Apply to Me?*

This action is directed to the public in general. This action may, however, be of interest to those persons who are interested in agricultural biotechnology or may be required to conduct testing of chemical substances under the Federal Food, Drug, and Cosmetic Act (FFDCA), or the Federal Insecticide, Fungicide, and Rodenticide Act (FIFRA). Since other entities may also be interested, the Agency has not attempted to describe all the specific entities that may be affected by this action. If you have any questions regarding the applicability of this action to a particular entity, consult the person listed under **FOR FURTHER INFORMATION CONTACT**.

*B. How Can I Get Additional Information, Including Copies of this Document and Other Related Documents?*

1. *Electronically.* You may obtain electronic copies of this document, and certain other related documents that might be available electronically, from the EPA Internet Home Page at http://www.epa.gov/. To access this document, on the Home Page select ''Laws and Regulations,'' '' Regulations and Proposed Rules,'' and then look up the entry for this document under the ''**Federal Register**—Environmental Documents.'' You can also go directly to the **Federal Register** listings at http://www.epa.gov/fedrgstr/.

2. *In person.* The Agency has established an official record for this action under docket control number OPP–50876. The official record consists of the documents specifically referenced in this action, and other information related to this action, including any information claimed as Confidential Business Information (CBI). This official record includes the documents that are physically located in the docket, as well as the documents that are referenced in those documents. The public version of the official record does not include any information claimed as CBI. The public version of the official record, which includes printed, paper versions of any electronic comments submitted during an applicable comment period is available for inspection in the Public Information and Records Integrity Branch (PIRIB), Rm. 119, Crystal Mall #2, 1921 Jefferson Davis Hwy., Arlington, VA, from 8:30 a.m. to 4 p.m., Monday through Friday, excluding legal holidays. The PIRIB telephone number is (703) 305–5805.

*C. How and to Whom Do I Submit Comments?*

You may submit comments through the mail, in person, or electronically. To ensure proper receipt by EPA, it is imperative that you identify docket control number OPP–50876 in the subject line on the first page of your response.

1. *By mail.* Submit your comments to: Public Information and Records Integrity Branch (PIRIB), Information Resources and Services Division (7502C), Office of Pesticide Programs (OPP), Environmental Protection Agency, 1200 Pennsylvania Ave., NW., Washington, DC 20460.

2. *In person or by courier.* Deliver your comments to: Public Information and Records Integrity Branch (PIRIB), Information Resources and Services Division (7502C), Office of Pesticide Programs (OPP), Environmental Protection Agency, Rm. 119, Crystal Mall #2, 1921 Jefferson Davis Hwy., Arlington, VA. The PIRIB is open from 8:30 a.m. to 4 p.m., Monday through Friday, excluding legal holidays. The PIRIB telephone number is (703) 305–5805.

3. *Electronically.* You may submit your comments electronically by e-mail to: opp-docket@epa.gov, or you can submit a computer disk as described above. Do not submit any information electronically that you consider to be CBI. Avoid the use of special characters and any form of encryption. Electronic submissions will be accepted in WordPerfect 6.1/8.0 or ASCII file format. All comments in electronic form must be identified by docket control number OPP–50876. Electronic comments may also be filed online at many Federal Depository Libraries.

*D. How Should I Handle CBI That I Want to Submit to the Agency?*

Do not submit any information electronically that you consider to be CBI. You may claim information that you submit to EPA in response to this document as CBI by marking any part or all of that information as CBI. Information so marked will not be disclosed except in accordance with procedures set forth in 40 CFR part 2. In addition to one complete version of the comment that includes any information claimed as CBI, a copy of the comment that does not contain the information claimed as CBI must be submitted for inclusion in the public

version of the official record. Information not marked confidential will be included in the public version of the official record without prior notice. If you have any questions about CBI or the procedures for claiming CBI, please consult the person listed under **FOR FURTHER INFORMATION CONTACT**.

*E. What Should I Consider as I Prepare My Comments for EPA?*

You may find the following suggestions helpful for preparing your comments:

1. Explain your views as clearly as possible.
2. Describe any assumptions that you used.
3. Provide copies of any technical information and/or data you used that support your views.
4. If you estimate potential burden or costs, explain how you arrived at the estimate that you provide.
5. Provide specific examples to illustrate your concerns.
6. Offer alternative ways to improve the notice.
7. Make sure to submit your comments by the deadline in this document.
8. To ensure proper receipt by EPA, be sure to identify the docket control number assigned to this action in the subject line on the first page of your response. You may also provide the name, date, and **Federal Register** citation.

## II. Background

Mycogen Seeds c/o Dow AgroSciences LLC is requesting to amend 68467–EUP–2 for the plant-pesticide Bacillus thuringiensis delta endotoxin as produced in corn by a cry1F gene and its controlling sequences as found on plasmid insert PHI8999. This amendment request entails the transfer of 55 acres in Nebraska to Puerto Rico. Specifically, the 55 acres in Nebraska were part of an Agronomic Observation Trial that were not used this past summer. In Puerto Rico, the 55 acres will be planted to two protocols, 20 acres to Breeding and Observation Trials and 35 acres to Agronomic Observation Trials. The transfer reduces the state acreage in Nebraska from 161.96 to 106.96 acres and increases the state acreage in Puerto Rico from 34 to 89 acres. The transfer also adds the Agronomic Observation protocol to Puerto Rico. The transfer does not change the total acres under the EUP. All plantings of corn containing the *Bacillus thuringiensis* Cry1F protein under these experimental programs will be contained. No portion of the crops will be used as food or feed.

## III. What Action is the Agency Taking?

Following the review of the Mycogen Seeds c/o Dow AgroSciences LLC application and any comments and data received in response to this notice, EPA will decide whether to issue or deny the EUP request for this amended EUP program, and if amended, the conditions under which it is to be conducted. Any issuance of an amended EUP will be announced in the **Federal Register**.

## IV. What is the Agency's Authority for Taking this Action?

This action is issued under the authority of 40 CFR Part 172.

## List of Subjects

Environmental protection, Experimental use permits.

Dated: December 6, 2000.

**Janet L. Andersen,**

*Director, Biopesticides and Pollution Prevention Division, Office of Pesticide Programs.*

[FR Doc. 00–32036 Filed 12–14–00; 8:45 am]

BILLING CODE 6560–50–S

---

## ENVIRONMENTAL PROTECTION AGENCY

**[FRL–6917–5]**

## Palmyra Atoll; Proposed Notice of Administrative Settlement

**AGENCY:** Environmental Protection Agency (EPA).

**ACTION:** Notice; request for public comment.

**SUMMARY:** In accordance with the Comprehensive Environmental Response, Compensation and Liability Act of 1980, as amended by the Superfund Amendments and Reauthorization Act of 1986 (CERCLA), 42 U.S.C. 9600 *et seq.*, notice is hereby given that a proposed Agreement and Covenant Not to Sue (Prospective Purchaser Agreement) associated with Palmyra Atoll was executed by the United States Environmental Protection Agency (EPA) on November 16, 2000. The proposed Prospective Purchaser Agreement would resolve certain potential claims of the United States under sections 106 and 107(a) of CERCLA, 42 U.S.C. 9606 and 9607(a), and section 7003 of the Resource Conservation & Recovery Act (RCRA), 42 U.S.C. 6973, against The Nature Conservancy, a District of Columbia non-profit corporation (the Purchaser). The Purchaser plans to acquire Palmyra Atoll, a group of coral islets approximately 680 acres in extent located in the tropical Pacific Ocean 900 miles south-southwest of Hawaii at Lat. 5o N, Long. 162o W, to preserve it as a wildlife refuge. The Purchaser will pay EPA $10,000 and commit to manage the atoll to protect its conservation values in cooperation with the U.S. Department of Interior's Fish & Wildlife Service.

For thirty (30) calendar days following the date of publication of this notice, EPA will receive written comments relating to the proposed settlement. If requested prior to the expiration of this public comment period, EPA will provide an opportunity for a public meeting in the affected area. EPA's response to any comments received will be available for public inspection at the U.S. Environmental Protection Agency, 75 Hawthorne Street, San Francisco, CA 94105.

**DATES:** Comments must be submitted on or before January 16, 2001.

**ADDRESSES:** The proposed Prospective Purchaser Agreement and additional background documents relating to the settlement are available for public inspection at the U.S. Environmental Protection Agency, 75 Hawthorne Street, San Francisco, CA 94105. A copy of the proposed settlement may be obtained from William Keener, Assistant Regional Counsel (ORC–1), Office of Regional Counsel, U.S. EPA Region IX, 75 Hawthorne Street, San Francisco, CA 94105. Comments should reference ''The Nature Conservancy PPA, Palmyra Atoll'' and ''Docket No. 2001–04'' and should be addressed to William Keener at the above address.

**FOR FURTHER INFORMATION CONTACT:** William Keener, Assistant Regional Counsel (ORC–1), Office of Regional Counsel, U.S. EPA Region IX, 75 Hawthorne Street, San Francisco, CA 94105; phone: (415) 744–1356; fax (415) 744–1041; e-mail: *keener.bill@epa.gov.*

Dated: December 7, 2000.

**Michael Feeley,**

*Acting Director, Superfund Division, Region IX.*

[FR Doc. 00–32029 Filed 12–14–00; 8:45 am]

BILLING CODE 6560–50–P

## GENERAL SERVICES ADMINISTRATION

### Public Buildings Service; Notice of Availability of Final Environmental Impact Statement; Proposed Federal Courthouse and Office Building, Eugene/Springfield Metro Area, Lane County, Oregon

Pursuant to section 102(2)(C) of the National Environmental Policy Act (NEPA) of 1969, as amended, as implemented by the Council on Environmental Quality (40 CFR Parts 1500–1508), the General Services Administration (GSA) has filed with the Environmental Protection Agency, and made available to other government and interested private parties, the Final Environmental Impact Statement (FEIS) for the proposed construction of a 265,290 gross square feet Courthouse and office building including 80 secured parking spaces, located in the urban center of either Eugene/Springfield, Lane County, Oregon.

The FEIS is on file and a copy may be obtained from U.S. General Services Administration, Region 10, Attention: Michael D. Levine, 10PCP, 400 15th Street, SW., Auburn, Washington 98001 (206) 931–7263. A summary of the FEIS can be viewed at the following website: www.northwest.gsa.gov/eugeneusch/intro.htm.

Dated: December 4, 2000.

**L. Jay Pearson,**

*Regional Administrator (10A).*

[FR Doc. 00–31965 Filed 12–14–00; 8:45 am]

BILLING CODE 6820–34–M

## DEPARTMENT OF HEALTH AND HUMAN SERVICES

### Food and Drug Administration

**[Docket No. 00D–1223]**

### International Conference on Harmonisation; Guidance on E11 Clinical Investigation of Medicinal Products in the Pediatric Population; Availability

**AGENCY:** Food and Drug Administration, HHS.

**ACTION:** Notice.

**SUMMARY:** The Food and Drug Administration (FDA) is announcing the availability of a guidance entitled ''E11 Clinical Investigation of Medicinal Products in the Pediatric Population.'' The guidance was prepared under the auspices of the International Conference on Harmonisation of Technical Requirements for Registration of Pharmaceuticals for Human Use (ICH). The guidance sets forth critical issues in pediatric drug development and approaches to the safe, efficient, and ethical study of medicinal products in the pediatric population. The guidance is intended to encourage and facilitate the timely development of pediatric medicinal products internationally.

**DATES:** This guidance is effective December 15, 2000. Submit written comments on agency guidances at any time.

**ADDRESSES:** Submit written requests for single copies of the guidance to the Drug Information Branch (HFD–210), Center for Drug Evaluation and Research, Food and Drug Administration, 5600 Fishers Lane, Rockville, MD 20857, or the Office of Communication, Training and Manufacturers Assistance (HFM–40), Center for Biologics Evaluation and Research (CBER), Food and Drug Administration, 1401 Rockville Pike, Rockville, MD 20852–1448, 301–827–3844, FAX 888–CBERFAX. Send two self-addressed adhesive labels to assist that office in processing your requests. Submit written comments on the guidance to the Dockets Management Branch (HFA–305), Food and Drug Administration, 5630 Fishers Lane, rm. 1061, Rockville, MD 20852. Requests and comments should be identified with the docket number found in brackets in the heading of this document. See the **SUPPLEMENTARY INFORMATION** section of this document for electronic access to the guidance.

**FOR FURTHER INFORMATION CONTACT:**

Regarding the guidance: M. Dianne Murphy, Center for Drug Evaluation and Research (HFD–104), Food and Drug Administration, 5600 Fishers Lane, Rockville, MD 20857, 301–827–2350, or Karen Weiss, Center for Biologics Evaluation and Research (HFM–570), Food and Drug Administration, 1401 Rockville Pike, Rockville, MD 20852, 301–827–5093.

Regarding the ICH: Janet J. Showalter, Office of Health Affairs (HFY–20), Food and Drug Administration, 5600 Fishers Lane, Rockville, MD 20857, 301–827–0864.

**SUPPLEMENTARY INFORMATION:** In recent years, many important initiatives have been undertaken by regulatory authorities and industry associations to promote international harmonization of regulatory requirements. FDA has participated in many meetings designed to enhance harmonization and is committed to seeking scientifically based harmonized technical procedures for pharmaceutical development. One of the goals of harmonization is to identify and then reduce differences in technical requirements for drug development among regulatory agencies.

ICH was organized to provide an opportunity for tripartite harmonization initiatives to be developed with input from both regulatory and industry representatives. FDA also seeks input from consumer representatives and others. ICH is concerned with harmonization of technical requirements for the registration of pharmaceutical products among three regions: The European Union, Japan, and the United States. The six ICH sponsors are the European Commission, the European Federation of Pharmaceutical Industries Associations, the Japanese Ministry of Health and Welfare, the Japanese Pharmaceutical Manufacturers Association, the Centers for Drug Evaluation and Research and Biologics Evaluation and Research, FDA, and the Pharmaceutical Research and Manufacturers of America. The ICH Secretariat, which coordinates the preparation of documentation, is provided by the International Federation of Pharmaceutical Manufacturers Associations (IFPMA). The ICH Steering Committee includes representatives from each of the ICH sponsors and the IFPMA, as well as observers from the World Health Organization, the Canadian Health Protection Branch, and the European Free Trade Area.

In accordance with FDA's good guidance practices (GGP's) regulation (65 FR 56468, September 19, 2000), this document is being called a guidance, rather than a guideline.

To facilitate the process of making ICH guidances available to the public, the agency is changing its procedure for publishing ICH guidances. Beginning April 2000, we will no longer include the text of ICH guidances in the **Federal Register**. Instead, we will publish a notice in the **Federal Register** announcing the availability of an ICH guidance. The ICH guidance will be placed in the docket and can be obtained through regular agency sources (see the **ADDRESSES** section of this document). Draft guidances will be left in the original ICH format. Final guidances will be reformatted to conform to the GGP style before publication.

In the **Federal Register** of April 12, 2000 (65 FR 19777), FDA published a draft tripartite guidance entitled ''E11: Clinical Investigation of Medicinal Products in the Pediatric Population.'' The notice gave interested persons an opportunity to submit comments by May 30, 2000.

After consideration of the comments received and revisions to the guidance,

a final draft of the guidance was submitted to the ICH Steering Committee and endorsed by the three participating regulatory agencies in July 2000.

The guidance sets forth critical issues in pediatric drug development and approaches to the safe, efficient, and ethical study of medicinal products in the pediatric population. The guidance addresses the following clinical study issues: (1) Considerations when initiating a pediatric program for a medicinal product; (2) timing of initiation of pediatric studies during medicinal product development; (3) types of studies (pharmacokinetic, pharmacokinetic/pharmacodynamic, efficacy, safety); (4) age categories for studies; and (5) ethics of pediatric clinical investigation. The guidance is not comprehensive, but is intended to be used in conjunction with other ICH guidances and documents from regional regulatory authorities and pediatric societies. The guidance is intended to encourage and facilitate the timely development of pediatric medicinal products internationally.

This guidance represents the agency's current thinking on clinical investigation of medicinal products in the pediatric population. It does not create or confer any rights for or on any person and does not operate to bind FDA or the public. An alternative approach may be used if such approach satisfies the requirements of the applicable statutes, regulations, or both.

Interested persons may submit to the Dockets Management Branch (address above) written comments on the guidance at any time. Two copies of any comments are to be submitted, except that individuals may submit one copy. Comments are to be identified with the docket number found in brackets in the heading of this document. The guidance and received comments may be seen in the Dockets Management Branch between 9 a.m. and 4 p.m., Monday through Friday.

### Electronic Access

Copies of the guidance are available on the Internet at http://www.fda.gov/cder/guidance/index.htm or http://www.fda.gov/cber/publications.htm.

Dated: December 7, 2000.

**Margaret M. Dotzel,**

*Associate Commissioner for Policy.*

[FR Doc. 00–31947 Filed 12–14–00; 8:45 am]

BILLING CODE 4160–01–F

## DEPARTMENT OF HEALTH AND HUMAN SERVICES

## Food and Drug Administration

**[Docket No. 00P–1554]**

## Medical Devices; Exemptions From Premarket Notification; Class II Devices

**AGENCY:** Food and Drug Administration, HHS.

**ACTION:** Notice.

**SUMMARY:** The Food and Drug Administration (FDA) is publishing a notice announcing that it has received a petition requesting exemption from the premarket notification requirements for pharmacy compounding systems classified within the intravascular administration set, a class II device (special controls). FDA is publishing this notice in order to obtain comments on this petition in accordance with procedures established by the Food and Drug Administration Modernization Act of 1997 (FDAMA).

**DATES:** Submit written comments by January 16, 2001.

**ADDRESSES:** Submit written comments on this notice to the Dockets Management Branch (HFA–305), Food and Drug Administration, 5630 Fishers Lane, rm. 1061, Rockville, MD 20852.

**FOR FURTHER INFORMATION CONTACT:** Heather S. Rosecrans, Center for Devices and Radiological Health (HFZ–404), Food and Drug Administration, 9200 Corporate Blvd., Rockville, MD 20850, 301–594–1190.

**SUPPLEMENTARY INFORMATION:**

### I. Statutory Background

Under section 513 of the Federal Food, Drug, and Cosmetic Act (the act) (21 U.S.C. 360c), FDA must classify devices into one of three regulatory classes: Class I, class II, or class III. FDA classification of a device is determined by the amount of regulation necessary to provide a reasonable assurance of safety and effectiveness. Under the Medical Device Amendments of 1976 (the 1976 amendments (Public Law 94–295)), as amended by the Safe Medical Devices Act of 1990 (the SMDA) (Public Law 101–629)), devices are to be classified into class I (general controls) if there is information showing that the general controls of the act are sufficient to ensure safety and effectiveness; into class II (special controls), if general controls, by themselves, are insufficient to provide reasonable assurance of safety and effectiveness, but there is sufficient information to establish special controls to provide such assurance; and into class III (premarket approval), if there is insufficient information to support classifying a device into class I or class II and the device is a life-sustaining or life-supporting device or is for a use that is of substantial importance in preventing impairment of human health, or presents a potential unreasonable risk of illness or injury.

Most generic types of devices that were on the market before the date of the 1976 amendments (May 28, 1976) (generally referred to as preamendments devices) have been classified by FDA under the procedures set forth in section 513(c) and (d) of the act through the issuance of classification regulations into one of these three regulatory classes. Devices introduced into interstate commerce for the first time on or after May 28, 1976 (generally referred to as postamendments devices), are classified through the premarket notification process under section 510(k) of the act (21 U.S.C. 360(k)). Section 510(k) of the act and the implementing regulations (21 CFR part 807) require persons who intend to market a new device to submit a premarket notification report containing information that allows FDA to determine whether the new device is ''substantially equivalent'' within the meaning of section 513(i) of the act to a legally marketed device that does not require premarket approval.

On November 21, 1997, the President signed into law FDAMA (Public Law 105–115). Section 206 of FDAMA, in part, added a new section 510(m) to the act. Section 510(m)(1) of the act requires FDA, within 60 days after enactment of the FDAMA, to publish in the **Federal Register** a list of each type of class II device that does not require a report under section 510(k) of the act to provide reasonable assurance of safety and effectiveness. Section 510(m) of the act further provides that a 510(k) will no longer be required for these devices upon the date of publication of the list in the **Federal Register**. FDA published that list in the **Federal Register** of January 21, 1998 (63 FR 3142). In the **Federal Register** of November 3, 1998 (63 FR 59222), FDA published a final rule codifying these exemptions.

Section 510(m)(2) of the act provides that, 1 day after date of publication of the list under section 510(m)(1), FDA may exempt a device on its own initiative or upon petition of an interested person, if FDA determines that a 510(k) is not necessary to provide reasonable assurance of the safety and effectiveness of the device. This section requires FDA to publish in the **Federal Register** a notice of intent to exempt a

device, or of the petition, and to provide a 30-day comment period. Within 120 days of publication of this document, FDA must publish in the **Federal Register** its final determination regarding the exemption of the device that was the subject of the notice. If FDA fails to respond to a petition under this section within 180 days of receiving it, the petition shall be deemed granted.

## II. Criteria for Exemption

There are a number of factors FDA may consider to determine whether a 510(k) is necessary to provide reasonable assurance of the safety and effectiveness of a class II device. These factors are discussed in the guidance the agency issued on February 19, 1998, entitled ''Procedures for Class II Device Exemptions From Premarket Notification, Guidance for Industry and CDRH Staff.'' That guidance can be obtained through the Internet on the CDRH home page at http://www.fda.gov/cdrh or by facsimile through CDRH Facts-on-Demand at 1–800–899–0381 or 301–827–0111. Specify ''159'' when prompted for the document shelf number.

## III. Petition

FDA received the following petition requesting an exemption from premarket notification for class II devices: Baxter Healthcare, Pharmacy Compounding Systems Classified within the *Intravascular administration set*, 21 CFR 880.5440.

## IV. Comments

Interested persons may submit to the Dockets Management Branch (address above) written comments regarding this petition by January 16, 2001. Two copies of any comments are to be submitted, except that individuals may submit one copy. Comments are to be identified with the docket number found in brackets in the heading of this document. The petition and received comments may be seen in the Dockets Management Branch between 9 a.m. and 4 p.m., Monday through Friday.

Dated: December 5, 2000.

**Linda S. Kahan,**

*Deputy Director for Regulations Policy, Center for Devices and Radiological Health.*

[FR Doc. 00–31961 Filed 12–14–00; 8:45 am]

BILLING CODE 4160–01–F

## DEPARTMENT OF HEALTH AND HUMAN SERVICES

## Food and Drug Administration

**[Docket Nos. 00M–1391, 00M–1536, 00M–1447, 00M–1522, 00M–0809, 00M–1517, 00M–1451, 00M–1448, 00M–1507, 00M–1389, 00M–1388, 00M–1508, 00M–1390, 00M–1386, 00M–1387, 00M–1414, 00M–1415, 00M–1416, 00M–1495, 00M–1437, 00M–1475, 00M–1483, 00M–1515, 00M–1524, 00M–1523]**

## Medical Devices; Availability of Safety and Effectiveness Summaries for Premarket Approval Applications

**AGENCY:** Food and Drug Administration, HHS.

**ACTION:** Notice.

**SUMMARY:** The Food and Drug Administration (FDA) is publishing a list of premarket approval applications (PMA's) that have been approved. This list is intended to inform the public of the availability of safety and effectiveness summaries of approved PMA's through the Internet and the agency's Dockets Management Branch.

**ADDRESSES:** Submit a written request for copies of summaries of safety and effectiveness to the Dockets Management Branch (HFA–305), Food and Drug Administration, 5630 Fishers Lane, rm. 1061, Rockville, MD 20852. Please cite the appropriate docket number as listed in table 1 of this document when submitting a written request. See the **SUPPLEMENTARY INFORMATION** section for electronic access to the summary of safety and effectiveness

**FOR FURTHER INFORMATION CONTACT:** Thinh Nguyen, Center for Devices and Radiological Health (HFZ–402), Food and Drug Administration, 9200 Corporate Blvd., Rockville, MD 20850, 301–594–2186.

**SUPPLEMENTARY INFORMATION:**

## I. Background

In the **Federal Register** of January 30, 1998 (63 FR 4571), FDA published a final rule to revise §§ 814.44(d) and 814.45(d) (21 CFR 814.44(d) and 814.45(d)) to discontinue publication of individual PMA approvals and denials in the **Federal Register**. Instead, revised §§ 814.44(d) and 814.45(d) state that FDA will notify the public of PMA approvals and denials by posting them on FDA's home page at http://www.fda.gov on the Internet; by placing the summaries of safety and effectiveness on the Internet and in FDA's Dockets Management Branch; and by publishing in the **Federal Register** after each quarter a list of available safety and effectiveness summaries of approved PMA's and denials announced in that quarter.

FDA believes that this procedure expedites public notification of these actions because announcements can be placed on the Internet more quickly than they can be published in the **Federal Register**, and FDA believes that the Internet is accessible to more people than the **Federal Register**.

In accordance with section 515(d)(4) and (e)(2) of the Federal Food, Drug, and Cosmetic Act (the act) (21 U.S.C. 360e(d)(4) and (e)(2)), notification of an order approving, denying, or withdrawing approval of a PMA will continue to include a notice of opportunity to request review of the order under section 515(g) of the act. The 30-day period for requesting reconsideration of an FDA action under § 10.33(b) (21 CFR 10.33(b)) for notices announcing approval of a PMA begins on the day the notice is placed on the Internet. Section 10.33(b) provides that FDA may, for good cause, extend this 30-day period. Reconsideration of a denial or withdrawal of approval of a PMA may be sought only by the applicant; in these cases, the 30-day period will begin when the applicant is notified by FDA in writing of its decision.

The following is a list of approved PMA's for which summaries of safety and effectiveness were placed on the Internet in accordance with the procedure explained previously from July 1, 2000, through September 30, 2000. There were no denial actions during this period. The list provides the manufacturer's name, the product's generic name or the trade name, and the approval date.

TABLE 1.—LIST OF SAFETY AND EFFECTIVENESS SUMMARIES FOR APPROVED PMA'S MADE AVAILABLE JULY 1, 2000, THROUGH SEPTEMBER 30, 2000

| PMA Number/Docket No. | Applicant | Trade Name | Approval Date |
|---|---|---|---|
| P930016(S7)/00M–1391 | VISX, Inc. | VISX STAR S2 Excimer Laser System | November 2, 1998 |
| P920030(S2)/00M–1536 | Chiron Corp. | CIBA Corning ACS PSA Immunoassay | December 8, 1998 |
| P910065(S1)/00M–1523 | Tosoh Medics, Inc. | AIA–PACK PA | September 10, 1999 |
| P990010/00M–1447 | CRS Clinical Research, Inc. | VISX Inc. Excimer Laser System Model C ''STAR'' | November 19, 1999 |
| P940035(S2)/00M–1522 | Matritech Inc. | Matritech NMP22® Test Kit | January 18, 2000 |
| P990023/00M–0809 | Alcon Laboratories | Cellugel® Ophthalmic Viscosurgical Device | February 24, 2000 |
| P990054/00M–1517 | Cardiac Pathways Corp. | Chilli® Cooled Ablation System | March 17, 2000 |
| H990014/00M–1451 | Medtronic Inc. | Enterra™ Therapy System (formerly named Gastric Electrical Stimulation (GES) System) | March 31, 2000 |
| P990053/00M–1448 | Nellcor Puritan Bennett | OxiFirst® Fetal Oxygen Saturation Monitoring System | May 12, 2000 |
| P990028/00M–1507 | Focal, Inc. | Focal Seal-L Synthetic Absorbable Sealant | May 26, 2000 |
| P980050/00M–1389 | Medtronic Inc. | Medtronic® Jewel® AF 7250 Dual Chamber Implantable Cardioverter Defibrillator | June 14, 2000 |
| P990025/00M–1388 | Biosense Webster, Inc. | NAVI–STAR Diagnostic/Ablation Deflectable Tip Catheter | June 15, 2000 |
| P950032(S16)/00M–1508 | Organogenesis, Inc. | Apligraf (Graftskin) | June 20, 2000 |
| P99037/00M–1390 | Vascular Solutions, Inc. | Vascular Solutions Duett Sealing Device | June 22, 2000 |
| P990078/00M–1386 | Sunrise Technologies | Hyperion LTK System | June 30, 2000 |
| P990021/00M–1387 | QLT Photo Therapeutics, Inc. | Diomed 630 PDT Laser, Model T2USA | June 30, 2000 |
| P990018/00M–1414 | Menicon USA, Inc. | Menicon™ Z Rigid Gas Permeable Contact Lens | July 11, 2000 |
| P000006/00M–1415 | Mentor Corp. | Alpha 1 Inflatable Penile Prosthesis | July 14, 2000 |
| P990064/00M–1416 | Medtronic Inc. | Mosaic® Porcine Bioprosthesic Heart Valve | July 14, 2000 |
| P990034/00M–1495 | Medtronic Inc. | Medtronic® IsoMed® Constant Flow Infusion System | July 21, 2000 |
| P990039/00M–1437 | Metra Biosystems, Inc. | QUS–2™ Calcaneal Ultrasonometer | August 1, 2000 |
| P990072/00M–1475 | Westcon Contact Lens Co., Inc. | W–55 (Methafilcon A) and Horizon 55 Soft Extended Wear Contact Lenses | August 22, 2000 |
| P860057(S11)/00M–1483 | Edwards Lifesciences, LLC | Carpentier-Edwards PERIMOUNT Pericardial Bioprosthesis | August 28, 2000 |
| P970042/00M–1515 | Medstone International, Inc. | Medstone STS™ Lithotripter | September 5, 2000 |
| P990055/00M–1524 | Bayer Corp. | Bayer Immuno 1™ Complexed PSA Assay | September 8, 2000 |

## II. Electronic Access

Persons with access to the Internet may obtain the documents at http://www.fda.gov/cdrh/pmapage.html.

Dated: December 5, 2000.

**Linda S. Kahan,**

*Deputy Director for Regulations Policy, Center for Devices and Radiological Health.*

[FR Doc. 00–31960 Filed 12–14–00; 8:45 am]

BILLING CODE 4160–01–F

## DEPARTMENT OF HEALTH AND HUMAN SERVICES

### Food and Drug Administration

**[Docket No. 00D–1392]**

### Draft Guidance for Industry on Botanical Drug Products; Availability; Reopening of Comment Period

**AGENCY:** Food and Drug Administration, HHS.

**ACTION:** Notice; reopening of comment period.

**SUMMARY:** The Food and Drug Administration (FDA) is reopening the comment period for the draft guidance for industry entitled ''Botanical Drug Products'' until March 15, 2001. This draft guidance explains the circumstances under which FDA approval of a new drug application (NDA) is required for marketing of a botanical drug product and when such a product may be marketed under an over-the-counter (OTC) drug monograph. It also provides guidance to researchers and manufacturers on conducting initial and expanded clinical investigations of botanical drug products. FDA is taking this action in response to a request for an extension.

**DATES:** Submit written comments on the draft guidance by March 15, 2001. General comments on agency guidance documents are welcome at any time.

**ADDRESSES:** Submit written requests for single copies of the draft guidance to the Drug Information Branch (HFD–210), Center for Drug Evaluation and Research

(CDER), Food and Drug Administration, 5600 Fishers Lane, Rockville, MD 20857, 301–827–5918. Send two self-addressed adhesive labels to assist that office in processing your requests. Submit written comments on the draft guidance to the Dockets Management Branch (HFA–305), Food and Drug Administration, 5630 Fishers Lane, rm. 1061, Rockville, MD 20852. Requests and comments should be identified with the docket number found in brackets in the heading of this document.

**FOR FURTHER INFORMATION CONTACT:** Yuan-Yuan Chiu, Center for Drug Evaluation and Research (HFD–800), Food and Drug Administration, 5600 Fishers Lane, Rockville, MD 20857, 301–827–5918.

**SUPPLEMENTARY INFORMATION:** In the **Federal Register** of August 11, 2000 (65 FR 49247), FDA published a notice announcing the availability of a draft guidance for industry entitled ''Botanical Drug Products.'' The draft guidance is intended to encourage the clinical study and submission for marketing approval of botanical drug products. The guidance explains the circumstances under which FDA approval of an NDA is required for marketing a botanical drug and when such a drug may be marketed under an OTC drug monograph. The draft guidance also provides scientific and regulatory guidance to sponsors about conducting initial and expanded clinical investigations of botanical drugs, including those botanical products currently lawfully marketed as foods and dietary supplements in the United States. In particular, the guidance provides information on how the agency will interpret and apply to botanical drugs certain provisions of existing regulations on the submission of investigational new drug applications (IND's) (21 CFR part 312). Interested persons were given until October 10, 2000, to submit written comments on the draft guidance.

FDA received a letter, dated September 15, 2000, from Diane C. McEnroe of the firm of Sidley & Austin, in behalf of a research-based company based in Asia, requesting that the agency extend the comment period on the draft guidance by 90 days.

The draft guidance introduces several new and highly technical issues. Therefore, the agency has decided to reopen the comment period on the draft guidance until March 15, 2001, to allow the public more time to review and comment on its contents.

Interested persons may submit to the Dockets Management Branch (address above) written comments on the draft guidance document by March 15, 2001. Two copies of any comments are to be submitted, except that individuals may submit one copy. Comments are to be identified with the docket number found in brackets in the heading of this document. The draft guidance document and received comments may be seen in the Dockets Management Branch between 9 a.m. and 4 p.m., Monday through Friday.

Dated: December 7, 2000.

**Margaret M. Dotzel,**

*Associate Commissioner for Policy.*

[FR Doc. 00–31948 Filed 12–14–00; 8:45 am]

BILLING CODE 4160–01–F

---

## DEPARTMENT OF HOUSING AND URBAN DEVELOPMENT

**[Docket No. FR–4565–N–32]**

## Management Review Report for Subsidized Multifamily Housing Programs

**AGENCY:** Office of the Assistant Secretary for Housing, HUD.

**ACTION:** Notice.

**SUMMARY:** The proposed information collection requirement described below will be submitted to the Office of Management and Budget (OMB) for review, as required by the Paperwork Reduction Act. The Department is soliciting public comments on the subject proposal.

**DATES:** *Comments Due Date:* February 13, 2001.

**ADDRESSES:** Interested persons are invited to submit comments regarding this proposal. Comments should refer to the proposal by name and/or OMB Control Number and should be sent to: Wayne Eddins, Reports Management Officer, Department of Housing and Urban Development, 451 7th Street, SW, L'Enfant Building, room 8202, Washington, DC 20410, telephone (202) 708–5221 (this is not a toll-free number) for copies of the proposed forms and other available information.

**FOR FURTHER INFORMATION CONTACT:** Beverly J. Miller, Director, Policy and Participation Standards Division, Department of Housing and Urban Development, 451 7th Street, SW, Washington, DC 20410, telephone number (202) 708–1320 (this is not a toll-free number) for copies of the proposed forms and other available information.

**SUPPLEMENTARY INFORMATION:** The Department is submitting the proposed information collection to OMB for review, as required by the Paperwork Reduction Act of 1995 (44 U.S.C. Chapter 35, as amended).

This Notice is soliciting comments from members of the public and affected agencies concerning the proposed collection of information to: (1) Evaluate whether the proposed collection is necessary for the proper performance of the functions of the agency, including whether the information will have practical utility; (2) Evaluate the accuracy of the agency's estimate of the burden of the proposed collection of information; (3) Enhance the quality, utility, and clarity of the information to be collected; and (4) Minimize the burden of the collection of information on those who are to respond; including the use of appropriate automated collection techniques or other forms of information technology, e.g., permitting electronic submission of responses.

This Notice also lists the following information:

*Title of Proposal:* Management Review Report for Subsidized Multifamily Housing Programs.

*OMB Control Number, if applicable:* 2502–0259.

*Description of the need for the information and proposed use:* Owners are required to submit Management Review Reports when the owner changes management agents, when a project has been determined to be an unacceptable risk, or the owner and agent negotiate a new management fee and/or management agreement, or the agent makes major changes in its organization structure.

*Agency form numbers, if applicable:* HUD–9838.

*Estimation of the total numbers of hours needed to prepare the information collection including number of respondents, frequency of response, and hours of response:* The number of respondents of HUD staff and Contract Administrators is 900; the frequency of responses is 1; estimated time to prepare collection is 8 hours per response, and the total annual burden hours are 7,200.

*Status of the proposed information collection:* Revision of currently approved collection.

**Authority:** The Paperwork Reduction Act of 1955, 44 U.S.C., Chapter 35, as amended.

Dated: December 11, 2000.

**William C. Apgar,**

*Assistant Secretary for Housing—FHA.*

[FR Doc. 00–31985 Filed 12–14–00; 8:45 am]

BILLING CODE 4210–27–M

## DEPARTMENT OF HOUSING AND URBAN DEVELOPMENT

**[Docket No. FR–4557–N–50]**

## Federal Property Suitable as Facilities to Assist the Homeless

**AGENCY:** Office of the Assistant Secretary for Community Planning and Development, HUD.

**ACTION:** Notice.

**SUMMARY:** This Notice identifies unutilized, underutilized, excess, and surplus Federal property reviewed by HUD for suitability for possible use to assist the homeless.

**FOR FURTHER INFORMATION CONTACT:** Clifford Taffet, room 7266, Department of Housing and Urban Development, 451 Seventh Street SW., Washington, DC 20410; telephone (202) 708–1234; TTY number for the hearing- and speech-impaired (202) 708–2565 (these telephone numbers are not toll-free), or call the toll-free Title V information line at 1–800–927–7588.

**SUPPLEMENTARY INFORMATION:** In accordance with 24 CFR part 581 and section 501 of the Stewart B. McKinney Homeless Assistance Act (42 U.S.C. 11411), as amended, HUD is publishing this Notice to identify Federal buildings and other real property that HUD has reviewed for suitability for use to assist the homeless. The properties were reviewed using information provided to HUD by Federal landholding agencies regarding unutilized and underutilized buildings and real property controlled by such agencies or by GSA regarding its inventory of excess or surplus Federal property. This Notice is also published in order to comply with the December 12, 1988 Court Order in *National Coalition for the Homeless* v. *Veterans Administration,* No. 88–2503–OG (D.D.C.).

Properties reviewed are listed in this Notice according to the following categories: Suitable/available, suitable/unavailable, suitable/to be excess, and unsuitable. The properties listed in the three suitable categories have been reviewed by the landholding agencies, and each agency has transmitted to HUD: (1) Its intention to make the property available for use to assist the homeless, (2) its intention to declare the property excess to the agency's needs, or (3) a statement of the reasons that the property cannot be declared excess or made available for use as facilities to assist the homeless.

Properties listed as suitable/available will be available exclusively for homeless use for a period of 60 days from the date of this Notice. Homeless assistance providers interested in any such property should send a written expression of interest to HHS, addressed to Brian Rooney, Division of Property Management, Program Support Center, HHS, room 5B–41, 5600 Fishers Lane, Rockville, MD 20857; (301) 443–2265. (This is not a toll-free number.) HHS will mail to the interested provider an application packet, which will include instructions for completing the application. In order to maximize the opportunity to utilize a suitable property, providers should submit their written expressions of interest as soon as possible. For complete details concerning the processing of applications, the reader is encouraged to refer to the interim rule governing this program, 24 CFR part 581.

For properties listed as suitable/to be excess, that property may, if subsequently accepted as excess by GSA, be made available for use by the homeless in accordance with applicable law, subject to screening for other Federal use. At the appropriate time, HUD will publish the property in a Notice showing it as either suitable/available or suitable/unavailable.

For properties listed as suitable/unavailable, the landholding agency has decided that the property cannot be declared excess or made available for us to assist the homeless, and the property will not be available.

Properties listed as unsuitable will not be made available for any other purpose for 20 days from the date of this Notice. Homeless assistance providers interested in a review by HUD of the determination of unsuitability should call the toll free information line at 1–800–927–7588 for detailed instructions or write a letter to Clifford Taffet at the address listed at the beginning of this Notice. Included in the request for review should be the property address (including zip code), the date of publication in the **Federal Register,** the landholding agency, and the property number.

For more information regarding particular properties identified in this Notice (*i.e.,* acreage, floor plan, existing sanitary facilities, exact street address), providers should contact the appropriate landholding agencies at the following addresses: ARMY: Mr. Jeff Holste, Military Programs, U.S. Army Corps of Engineers, Installation Support Center, Planning Branch, 441 G Street, Washington, DC 20314–1000; (202) 761–5737; GSA: Mr. Brian K. Polly, Assistant Commissioner, General Services Administration, Office of Property Disposal, 18th and F Streets, NW., Washington, DC 20405; (202) 501–0052; (These are not toll-free numbers).

Dated: December 7, 2000.

**John D. Garrity,**

*Director, Office of Special Needs Assistance Programs.*

**TITLE V. FEDERAL SURPLUS PROPERTY PROGRAM FEDERAL REGISTER REPORT FOR 12/15/00**

**Suitable/Available Properties**

*Buildings (by State)*

California

Bldg. S251
Army Reserve
6357 Woodly Ave.
Van Nuys Co: Los Angeles CA 91406–6496
Landholding Agency: Army
Property Number: 21200040043
Status: Excess
Comment: 800 sq. ft., needs repair, presence of asbestos, most recent use—storage, off-site use only

Georgia

Bldg. 223
Fort Benning
Ft. Benning Co: Muscogee GA 31905–
Landholding Agency: Army
Property Number: 21200040044
Status: Unutilized
Comment: 0,220 sq. ft., most recent use—gen. purpose

Bldg. 228
Fort Benning
Ft. Benning Co: Muscogee GA 31905–
Landholding Agency: Army
Property Number: 21200040045
Status: Unutilized
Comment: 20,220 sq. ft., most recent use—gen. purpose

Bldg. 2051
Fort Benning
Ft. Benning Co: Muscogee GA 31905–
Landholding Agency: Army
Property Number: 21200040046
Status: Unutilized
Comment: 6077 sq. ft., most recent use—storage

Bldg. 2053
Fort Benning
Ft. Benning Co: Muscogee GA 31905–
Landholding Agency: Army
Property Number: 21200040047
Status: Unutilized
Comment: 14,520 sq. ft., most recent use—storage

Bldg. 2677
Fort Benning
Ft. Benning Co: Muscogee GA 31905–
Landholding Agency: Army
Property Number: 21200040048
Status: Unutilized
Comment: 19,326 sq. ft., most recent use—maint. shop

Bldg. T–339
Fort Riley
Ft. Riley Co: KS 66442–
Landholding Agency: Army
Property Number: 21200040049
Status: Unutilized
Comment: 2243 sq. ft., poor condition, most recent use—maint. shop, off-site use only

Bldg. T–340
Fort Riley

Ft. Riley Co: KS 66442–
Landholding Agency: Army
Property Number: 21200040050
Status: Unutilized
Comment: 3000 sq. ft., poor condition, most recent use—maint. shop, off-site use only

Bldg. T–341
Fort Riley
Ft. Riley Co: KS 66442–
Landholding Agency: Army
Property Number: 21200040051
Status: Unutilized
Comment: 1130 sq. ft., poor condition, most recent use—maint. shop, off-site use only

Bldg. T–342
Fort Riley
Ft. Riley Co: KS 66442–
Landholding Agency: Army
Property Number: 21200040052
Status: Unutilized
Comment: 810 sq. ft., poor condition, most recent use—maint. shop, off-site use only

Bldg. T–343
Fort Riley
Ft. Riley Co: KS 66442–
Landholding Agency: Army
Property Number: 21200040053
Status: Unutilized
Comment: 3912 sq. ft., poor condition, most recent use—maint. shop, off-site use only

Bldg. T–344
Fort Riley
Ft. Riley Co: KS 66442–
Landholding Agency: Army
Property Number: 21200040054
Status: Unutilized
Comment: 9280 sq. ft., poor condition, most recent use—storage, off-site use only

Bldg. T–345
Fort Riley
Ft. Riley Co: KS 66442–
Landholding Agency: Army
Property Number: 21200040055
Status: Unutilized
Comment: 2888 sq. ft., poor condition, most recent use—maint. shop, off-site use only

Bldg. T–348
Fort Riley
Ft. Riley Co: KS 66442–
Landholding Agency: Army
Property Number: 21200040056
Status: Unutilized
Comment: 2888 sq. ft., poor condition, most recent use—maint. bldg., off-site use only

Bldg. T–351
Fort Riley
Ft. Riley Co: KS 66442–
Landholding Agency: Army
Property Number: 21200040057
Status: Unutilized
Comment: 7595 sq. ft., poor condition, most recent use—maint. bldg., off-site use only

Missouri

Bldg. 1178
Fort Leonard Wood
Ft. Leonard Wood Co: MO 65473–8994
Landholding Agency: Army
Property Number: 21200040058
Status: Unutilized
Comment: 3203 sq. ft., most recent use—fire station, off-site use only

New Mexico

9 MFH Units
White Sands Missile Range
White Sands Co: Dona Ana NM88002–
Location: 11201, 12210, 11214, 11217, 11220, 11223, 11244, 11247, 11264
Landholding Agency: Army
Property Number: 21200040062
Status: Unutilized
Comment: 1620 sq. ft. each, major repairs required, presence of asbestos, most recent use—housing, off-site use only

19 MFH Units
White Sands Missile Range
White Sands Co: Dona Ana NM88002–
Location: 11202, 12209, 11212, 11216, 11219, 11222, 11224, 11227, 11236, 11241, 11242, 11245, 11249, 11253, 11257, 11260, 11263, 11270, 11273
Landholding Agency: Army
Property Number: 21200040063
Status: Unutilized
Comment: 1606 sq. ft. each, major repairs required, presence of asbestos, most recent use—housing, off-site use only

34 MFU Units
White Sands Missile Range
White Sands Co: Dona Ana NM 88002–
Landholding Agency: Army
Property Number: 21200040064
Status: Unutilized
Comment: 1512 sq. ft. each, major repairs required, presence of asbestos, most recent use—housing, off-site use only

12 MFU Units
White Sands Missile Range
White Sands Co: Dona Ana NM 88002–
Location: 11204, 11207, 11226, 11229, 11232, 11235, 11238, 11251, 11255, 11258, 11261, 11266
Landholding Agency: Army
Property Number: 21200040065
Status: Unutilized
Comment: 1590 sq. ft. each, major repairs required, presence of asbestos, most recent use—housing, off-site use only

Bldg. 23644
White Sands Missile Range
White Sands Co: Dona Ana NM 88002–
Landholding Agency: Army
Property Number: 21200040066
Status: Unutilized
Comment: 80 sq. ft., poor condition, presence of asbestos, most recent use—equip. facility, off-site use only

New York

Bldgs. 109, 110
Fort Hamilton
Brooklyn Co: NY 11252–
Landholding Agency: Army
Property Number: 21200040067
Status: Unutilized
Comment: 39,723 sq. ft., needs repair, presence of asbestos, most recent use—guest house, off-site use only

Bldg. T–270
Fort Drum
Ft. Drum Co: Jefferson NY 13602–
Landholding Agency: Army
Property Number: 21200040068
Status: Unutilized
Comment: 2510 sq. ft., needs repair, most recent use—dining facility, off-site use only

Bldg. T–2276
Fort Drum
Ft. Drum Co: Jefferson NY 13602–
Landholding Agency: Army
Property Number: 21200040069
Status: Unutilized
Comment: 5310 sq. ft., needs repair, most recent use—officer's quarters, off-site use only

300 acres
U.S. Military Academy
Highlands Co: Orange NY 10996–1592
Landholding Agency: Army
Property Number: 21200040070
Status: Unutilized
Comment: Approx. 300 acres, contains wetlands and rare flora.

Missouri

Bldg. 2172
Fort Leonard Wood
Ft. Leonard Wood Co: Pulaski MO 65473–8994
Landholding Agency: Army
Property Number: 21200040059
Status: Unutilized
Comment: 2892 sq. ft., most recent use—operations, off-site use only

Bldg. 5041
Fort Leonard Wood
Ft. Leonard Wood Co: Pulaski MO 65473–8994
Landholding Agency: Army
Property Number: 21200040060
Status: Unutilized
Comment: 1000 sq. ft., most recent use—classroom, off-site use only

Bldg. 5286
Fort Leonard Wood
Ft. Leonard Wood Co: Pulaski MO 65473–8994
Landholding Agency: Army
Property Number: 21200040061
Status: Unutilized
Comment: 1000 sq. ft., most recent use—range support bldg., off-site use only

Washington

Ft. Lawton Comsite
California Ave.
Seattle Co: King WA
Landholding Agency: GSA
Property Number: 54200040009
Status: Excess
Comment: 2000 sq. ft. of flammable or explosive material
GSA Number: 9–C–WA–1189

*Land (by State)*

Massachusetts

USCG Loran Station
Siasconset Co: Nantucket MA 02564–0880
Landholding Agency: GSA
Property Number: 54200040008
Status: Excess
Reason: Within 2000 ft. of flammable or explosive material
GSA Number: 1–U–MA–858

[FR Doc. 00–31654 Filed 12–14–00; 8:45 am]

BILLING CODE 4210–29–M

## DEPARTMENT OF HOUSING AND URBAN DEVELOPMENT

**[Docket No. FR–4513–N–06]**

## Credit Watch Termination Initiative

**AGENCY:** Office of Assistant Secretary for Housing-Federal Housing Commissioner, HUD.

**ACTION:** Notice.

**SUMMARY:** This notice advises of the cause and effect of termination of Origination Approval Agreements taken by HUD's Federal Housing Administration against HUD-approved mortgagees through its Credit Watch Termination Initiative. This notice includes a list of mortgagees which have had their Origination Approval Agreements (Agreements) terminated.

**FOR FURTHER INFORMATION CONTACT:** The Quality Assurance Division, Office of Housing, Department of Housing and Urban Development, 451 Seventh St., SW, room B133–P3214, Washington, DC 20410; telephone (202) 708–2830 (this is not a toll free number). Persons with hearing or speech impairments may access that number via TTY by calling the Federal Information Relay Service at (800) 877–8339.

**SUPPLEMENTARY INFORMATION:**

HUD has the authority to address deficiencies in the performance of lenders' loans as provided in the HUD mortgage approval regulations at 24 CFR 202.3. On May 17, 1999 (64 FR 26769), HUD published a notice on its procedures for terminating origination approval agreements with FHA lenders and placement of FHA lenders on Credit Watch status (an evaluation period). In the May 17, 1999 notice, HUD advised that it would publish in the **Federal Register** a list of mortgagees which have had their Origination Approval Agreements terminated.

### Termination of Origination Approval Agreement

Approval of mortgagee by HUD/FHA to participate in FHA mortgage insurance programs includes an Agreement between HUD and the mortgagee. Under the Agreement, the mortgagee is authorized to originate single family mortgage loans and submit them to FHA for insurance endorsement. The Agreement may be terminated on the basis of poor performance of FHA-insured mortgage loans originated by the mortgagee. The Termination of a mortgagee's Agreement is separate and apart from any action taken by HUD's Mortgagee Review Board under HUD's regulations at 24 CFR part 25.

### Cause

HUD's regulations permit HUD to terminate the Agreement with any mortgagee having a default and claim rate for loans endorsed within the preceding 24 months that exceeds 200 percent of the default and claim rate within the geographic area served by a HUD field office, and also exceeds the national default and claim rate. For the fifth review period, HUD is only terminating the Agreement of mortgagees whose default and claim rate exceeds both the national rate and 300 percent of the field office rate.

### Effect

Termination of the Agreement precludes that branch(s) of the mortgagee from originating FHA-insured single family mortgages within the area of the HUD field office(s) listed in this notice. Mortgagees authorized to purchase, hold, or service FHA insured mortgages may continue to do so.

Loans that closed or were approved before the Termination became effective may be submitted for insurance endorsement. Approved loans are: (1) Those already underwritten and approved by a Direct Endorsement (DE) underwriter employed by an unconditionally approved DE lender; and (2) cases covered by a firm commitment issued by HUD. Cases at earlier stages of processing cannot be submitted for insurance by the terminated branch; however, they may be transferred for completion of processing and underwriting to another mortgagee or branch authorized to originate FHA insured mortgages in that area. Mortgagees are obligated to continue to pay existing insurance premiums and meet all other obligations associated with insured mortgages.

A terminated mortgagee may apply for a new Origination Approval Agreement if the mortgagee continues to be an approved mortgagee meeting the requirements of 24 CFR 202.5, 202.6, 202.7, 202.8 or 202.10 and 202.12, if there has been no Origination Approval Agreement for at least six months, and if the Secretary determines that the underlying causes for termination have been remedied. To enable the Secretary to ascertain whether the underlying causes for termination have been remedied, a mortgagee applying for a new Origination Approval Agreement must obtain an independent review of the terminated office's operations as well as its mortgagee production, specifically including the FHA-insured mortgages cited in its termination notice. This independent analysis shall identify the underlying cause for the mortgagee's high default and claim rate. The review must be conducted and issued by an independent Certified Public Accountant (CPA) qualified to perform audits under Government Auditing Standards as set forth by the General Accounting Office. The mortgagee must also submit a written corrective action plan to address each of the issues identified in the CPA's report, along with evidence that the plan has been implemented. The application for a new Agreement should be in the form of a letter, accompanied by the CPA's report and corrective action plan. The request should be sent to the Director, Office of Lender Activities and Program Compliance, 451 Seventh Street, SW., room B133–P3214, Washington, DC 20410 or by courier to 490 L'Enfant Plaza, East, SW., suite 3214, Washington, DC 20024.

### Action

The following mortgagees have had their Agreements terminated by HUD:

| Mortgagee name | Mortgagee branch address | HUD office jurisdictions | Termination effective date | Home ownership centers |
|---|---|---|---|---|
| Carolina Home Mortgage Groups, Inc. | 125 Executive Pointe Blvd., Columbia, SC 29210. | Columbia, SC | 10/27/2000 | Atlanta. |
| Heritage Mortgage, LLC | 1926 North Lake Parkway, Suite 200, Tucker, GA 30084. | Atlanta, GA | 10/27/2000 | Atlanta. |
| Home Loan Mortgage Corp | 21250 Boxsprings Rd. #105, Moreno Valley, CA 92557. | Santa Ana, CA | 10/27/2000 | Santa Ana. |
| Home Mortgage Company | 1118 Main Street, Gardendale, AL 35071. | Birmingham, AL | 10/26/2000 | Atlanta. |
| D & D Funding, Inc | 494 North Garfield Avenue, Montebello, CA 90640. | Los Angeles, CA | 09/29/2000 | Santa Ana. |

| Mortgagee name | Mortgagee branch address | HUD office jurisdictions | Termination effective date | Home ownership centers |
|---|---|---|---|---|
| First Guaranty Mortgage | 7833 Walker Drive, #510, Greenbelt, MD 20770. | Washington, DC | 09/29/2000 | Philadelphia. |
| Mortgage Capital Resource | 10535 Foothill Blvd, Suite 460, Rancho Cucamonga, CA 91730. | Santa Ana, CA | 09/29/2000 | Santa Ana. |
| Ryans Express Equities | 90 Merrick Avenue Ste 620, East Meadow, NY 11554. | New York, NY | 09/29/2000 | Philadelphia. |

Dated: November 28, 2000.

**William C. Apgar,**

*Assistant Secretary for Housing—Federal Housing Commissioner.*

[FR Doc. 00–31984 Filed 12–14–00; 8:45 am]

**BILLING CODE 4210–27–M**

## DEPARTMENT OF THE INTERIOR

### Fish and Wildlife Service

### Notice of Intent To Issue a Final Comprehensive Conservation Plan, Associated Environmental Assessment, and Finding of No Significant Impact for Sevilleta National Wildlife Refuge in the Southwest Region

**AGENCY:** Fish and Wildlife Service, Interior.

**ACTION:** Notice.

**SUMMARY:** This notice advises the public that the U.S. Fish and Wildlife Service (Service) has prepared a Final Comprehensive Conservation Plan (CCP), associated Environmental Assessment (EA), and a Finding of No Significant Impact (FONSI) for the Sevilleta Lake National Wildlife Refuge, San Acacia, New Mexico, pursuant to the National Wildlife Refuge System Improvement Act of 1997, and National Environmental Policy Act of 1969, and its implementing regulations. The Regional Director, Southwest Regional Office, upon issuing a FONSI, considered a reasonable range of management framework alternatives.

Approval of the Sevilleta NWR CCP formalizes 10 goals which will result in:

- The enhancement, preservation, and protection of threatened and endangered species as they occur naturally or were historically present on the Sevilleta NWR so that viable, self-sustaining populations can be restored to their natural habitats. (Goal 1)
- The restoration and maintenance of the natural diversity of plants and animals as it occurred historically on the Sevilleta NWR. (Goal 2)
- The fostering and encouragement of research from bonafide research institutions, the provision of an atmosphere conducive to investigations into environmental processes on the refuge, and the assumption of pro-active role in facilitating research projects as they occur on the refuge. (Goal 3)
- The protection of existing, and acquisition of additional water rights and/or in-stream flow rights as necessary to protect the integrity of the riparian and aquatic habitats on the refuge. (Goal 4)
- The achievement of appropriate levels of public uses that are compatible with the purpose(s) for which the refuge was established and with the goals of the National Wildlife Refuge System; and the regulation of, as provided by law, all activities, uses, and practices that are potentially harmful to refuge resources. (Goal 5)
- The establishment of a formal program for public outreach, identification of important public resources, and implementation of environmental education programs accordingly. (Goal 6)
- The protection, maintenance, and monitoring of Service-managed cultural resources on Sevilleta NWR for the benefit of present and future generations. (Goal 7)
- The protection of existing lands associated with Sevilleta NWR for the benefit of fish and wildlife resources; the acquisition of additional lands; and the protection of the integrity of Refuge boundaries relative to adjacent lands. (Goal 8)
- The improvement of funding, facilities, and staffing that will result in enhancement of refuge habitat and wildlife resources, leading to the achievement of the goals of this plan and the goals of the National Wildlife Refuge System. (Goal 9)
- The strengthening of interagency and jurisdictional coordination on or near the Sevilleta NWR resulting in decisions benefitting fish and wildlife resources while avoiding duplication of effort. (Goal 10)

Some of the specific changes to the existing program changes include but are not necessarily limited to the following objectives:

- Continue implementation of the Mexican wolf captive propagation program on the refuge, and ensure continued operation within all applicable regulations, protocols, and safety guidelines.
- Preserve refuge habitat diversity and threatened and endangered species habitats by preserving and restoring habitats to their natural condition. This may involve aggressive removal of non-native plants (e.g., salt cedar) and wildlife (e.g., oryx, Barbary sheep).
- Maintain a viable population of silvery minnows on the Rio Grande within the refuge.
- Provide up to 100 acres of additional cottonwood/willow habitat for the southwestern willow flycatcher.
- By the end of FY 2001 (September 30, 2001), assess the refuge's full wilderness attributes, and determine appropriate areas within the full spectrum of the refuge for study and designation as Wilderness Study Areas. Included will be the dedication of between 3,000 and 8,000 acres as the Ladron Wilderness Study Area.
- Evaluate refuge grasslands potential as an introduction site for the endangered northern Aplomado falcon.
- Protect threatened and endangered species on the refuge and adjacent properties through outreach, educational activities and effective enforcement of fish and wildlife laws.
- Promote and support the introduction of native threatened and endangered species on the refuge.
- Ensure the integrity of all naturally occurring biotic communities on the Sevilleta NWR.
- Maintain migratory bird populations at healthy levels in the Upper/Middle Rio Grande Ecosystem.
- Reverse declining trends in quality and quantity of riparian/wetland habitats; restore, maintain, and enhance the species composition, aerial extent, and spatial distribution of riparian/wetland habitats.
- Protect, restore, and maintain upland terrestrial communities at the landscape level within the Upper/Middle Rio Grande Ecosystem.
- Use sound land use practices and management tools to protect upland terrestrial habitats in the Upper/Middle Rio Grande Ecosystem.
- Preserve, enhance, and restore hydrological regimes to perpetuate a

healthy river ecosystem. Use the Rio Grande Initiative to form partnerships that address water management, habitat enhancement, and restoration, and impacts of non-native plants and animals on biological diversity and endangered species.

• Compile a database of the baseline natural conditions, processes, and species associated within refuge ecosystems.

• Attain baseline natural conditions, processes, and populations of species in 50 percent of each habitat type by 2010. If attainment is not possible, implement adaptive management strategies designed to attain desired conditions.

• Contribute to the integrity of the Upper/Middle Rio Grande Watershed using sound management tools and practices.

• Map and determine aquifer sources and characteristics of upland seeps, springs, and other water sources on the refuge.

• Quantify water needs to maintain 90 acres of existing refuge wetlands and to restore 500 acres of wetlands associated with the Rio Grande.

• Acquire in-stream flow rights for the perennial portion of the Rio Salado, Rio Puerco, and other tributary streams.

• Develop partnerships, relationships, and communications to improve implementation of refuge wildlife and habitat management goals.

• Minimize human impacts to refuge ecosystems.

• Encourage research that improves management and monitoring of species, communities, and processes on the refuge and the Upper/Middle Rio Grande.

• Permit and encourage research from a wide range of interested parties and institutions while protecting the plants and wildlife of the ecosystem from detrimental human intrusion and manipulative research protocols.

• Minimize impacts of formal research activities.

• Provide the research community a unique opportunity to conduct wildlife-related research, which in turn provides the refuge with management direction.

• Provide the general public with high quality, wildlife-dependent experiences on and off the refuge.

• Provide the general public with high quality environmental education and wildlife-dependent experiences on and off the refuge.

• Develop sound management practices to protect cultural resources, within the scope of Part 614 of the Service Manual and all applicable federal laws and regulations.

• Minimize obtrusive impacts to refuge lands or adjacent lands.

• Document the need for additional staffing.

• Obtain adequate staffing to implement management plans benefiting the Upper/Middle Rio Grande Ecosystem both on and off refuge lands.

• Improve facilities to enhance refuge capabilities and resources, including the construction of an 8,000- square foot visitor center/ administrative complex; two 1,500- square foot staff residences; and a multi-unit living facility for refuge volunteers.

• Relocate the law enforcement training shooting range to a new location to eliminate the current hazards.

The implementation of the above management approaches among others and employment of strategies associated with those approaches should assist in the achievement of the refuge's broad goals:

Based on a review and evaluation of the information contained in the CCP and EA for the Sevilleta NWR, the Regional Director, Southwest Region, U.S. Fish and Wildlife Service, has determined that the approval of the individual or cumulative approaches reflected in the Proposed Alternative and CCP Goals, Objectives and Strategies, is not deemed to constitute a major Federal action which would significantly affect the quality of the human environment within the meaning of Section 102(2)(c) of the National Environmental Policy Act (NEPA). Therefore, an Environmental Impact Statement is not required. However, it is the intent of the Service to revisit questions of potential significant environmental consequences in accordance with NEPA upon consideration of the implementation of site specific proposals called for and discussed in the final plan document.

**ADDRESSES:** A paper copy and/or a Compact Disk copy may be obtained by writing to: Mr. Tom Baca, Natural Resources Planner, Division of Refuges, U.S. Fish and Wildlife Service, P.O. Box 1306, Albuquerque, NM 87103–1306.

**SUPPLEMENTARY INFORMATION:** It is Service policy to have all lands within the National Wildlife Refuge System managed in accordance with an approved CCP. The CCP guides management decisions and identifies refuge goals, long-range objectives, and strategies for achieving refuge purposes. The planning process has considered many elements, including habitat and wildlife management, habitat protection and acquisition, public and recreational uses, and cultural resources. Public input into this planning process has assisted in the development of these documents. The CCP will provide other agencies and the public with a clear understanding of the desired conditions for the Refuges and how the Service will implement management strategies.

The Service considered comments and advice generated in response to draft documents issued in November 1998. The Service is furnishing this notice in compliance with Service CCP policy to advise other agencies and the public of the availability of the final documents.

Dated: November 30, 2000.

**Thomas C. Bauer,**

*Acting Regional Director.*

[FR Doc. 00–31747 Filed 12–14–00; 8:45 am]

**BILLING CODE 4310–55–U**

---

## DEPARTMENT OF THE INTERIOR

### Fish and Wildlife Service

### Notice of Availability of an Environmental Assessment/Habitat Conservation Plan and Receipt of an Application for a Permit for the Incidental Take of the Bone Cave Harvestman (Texella reyesi) During Construction and Operation of Commercial Developments on Portions of 5.94 acres (Lots 1, 2, 3, 4, and 5) at RR 620 and Great Oaks Drive, Round Rock, Williamson County, Texas (Sultan & Kahn).

**SUMMARY:** Sultan and Kahn Partnership, Ltd. (Applicant) has applied to the U.S. Fish and Wildlife Service (Service) for an incidental take permit pursuant to Section 10(a) of the Endangered Species Act (Act). The Applicant has been assigned permit number TE–035525–0. The requested permit, which is for a period of 30 years, would authorize the incidental take of the endangered Bone Cave Harvestman (*Texella reyesi*). The proposed take would occur as a result of the construction and occupation of two commercial developments on 5.94 acres (Lots 1, 2, 3, 4, and 5) at RR 620 and Great Oaks Drive, Williamson County, Texas.

The Service has prepared the Environmental Assessment/Habitat Conservation Plan (EA/HCP) for the incidental take application. A determination of jeopardy to the species or a Finding of No Significant Impact (FONSI) will not be made until at least 30 days from the date of publication of this notice. This notice is provided pursuant to Section 10(c) of the Act and National Environmental Policy Act regulations (40 CFR 1506.6).

**DATES:** Written comments on the application should be received before January 16, 2001.

**ADDRESSES:** Persons wishing to review the application may obtain a copy by writing to the Regional Director, U.S. Fish and Wildlife Service, P.O. Box 1306, Room 4102, Albuquerque, New Mexico 87103. Persons wishing to review the EA/HCP may obtain a copy by contacting Sybil Vosler, U.S. Fish and Wildlife Service, 10711 Burnet Road, Suite 200, Austin, Texas 78758 (512/490–0057). Documents will be available for public inspection by written request, by appointment only, during normal business hours (8:00 to 4:30) at the U.S. Fish and Wildlife Service, Austin, Texas. Written data or comments concerning the application and EA/HCP should be submitted to the Supervisor, U.S. Fish and Wildlife Service, Austin, Texas, at the above address. Please refer to permit number TE–035525–0 when submitting comments.

**FOR FURTHER INFORMATION CONTACT:** Sybil Vosler at the above U.S. Fish and Wildlife Service, Austin Office.

**SUPPLEMENTARY INFORMATION:** Section 9 of the Act prohibits the ''taking'' of endangered species such as the Bone Cave Harvestman. However, the Service, under limited circumstances, may issue permits to take endangered wildlife species incidental to, and not the purpose of, otherwise lawful activities. Regulations governing permits for endangered species are at 50 CFR 17.22.

**APPLICANT:** Sultan and Kahn Partnership, Ltd. plans to construct two commercial developments on 5.94 acres (Lots 1, 2, 3, 4, and 5) at RR 620 and Great Oaks Drive, Williamson County, Texas. This action will occur on less than 2.41 acres (Lots 1, 4, and portions of Lots 2 and 5) and will indirectly impact the ecosystem of Back Bat/Beck Crevice Cave and Beck Pride Cave, which contain the endangered Bone Cave Harvestman. The development will eliminate less than 1.6 acres of cave cricket habitat, upon which the Bone Cave Harvestman depends, and may cause deterioration of the cave ecosystem by encouraging fire ants, altering the surface and subsurface moisture and temperature regimes, and increasing human impacts. The applicant proposes to compensate for this incidental take of Bone Cave Harvestman habitat by planting a 30-foot-wide native plant landscape buffer between the development and the cave conservation area; monitoring and treating for introduced fire ants on the undeveloped portions of Lots 2, 3, and 5; restricting the use of pesticides and herbicides; and prohibiting the use of the premises for businesses that have the potential to contaminate sub-surface karst and/or groundwater, such as gas stations and dry cleaners.

**Jeoffey L. Haskett,**

*Acting Regional Director, Region 2, Albuquerque, New Mexico.*

[FR Doc. 00–31891 Filed 12–14–00; 8:45 am]

BILLING CODE 4510–55–P

---

## DEPARTMENT OF THE INTERIOR

### Bureau of Indian Affairs

### Final Environmental Impact Statement for the Colville Indian Reservation Integrated Resource Management Plan, Colville Confederated Tribes, Colville Reservation, Washington

**AGENCY:** Bureau of Indian Affairs, Interior.

**ACTION:** Notice.

**SUMMARY:** This notice advises the public that the Bureau of Indian Affairs (BIA) intends to file a Final Environmental Impact Statement (FEIS) for an Integrated Resource Management Plan (IRMP) for the Colville Indian Reservation, Washington, with the U.S. Environmental Protection Agency, and that the FEIS is now available for public review. The proposed action is BIA approval for the Colville Confederated Tribes to implement the IRMP for the period 2000–2014. Brief descriptions of the proposed action and seven alternatives are provided in the **SUPPLEMENTARY INFORMATION** section.

**DATES:** Written comments must arrive by January 15, 2001.

**ADDRESSES:** You may mail or hand carry written comments to Jim Orwin, Acting Superintendent, Colville Agency, Bureau of Indian Affairs, P.O. Box 111, Nespelem, Washington 99155–0111.

Persons wishing copies of this FEIS may contact the Colville Confederated Tribes, P.O. Box 150, Nespelem, Washington 99155–0150, Attention: William Nicholson, Acting Executive Director, telephone (509) 634–2238. Copies of the FEIS have been sent to all agencies and individuals that participated in the scoping process and to all others who have already requested copies.

**FOR FURTHER INFORMATION CONTACT:** Jim Orwin, (509) 634–2308, or William Nicholson, (509) 634–2238.

**SUPPLEMENTARY INFORMATION:** The BIA is proposing to approve an IRMP for the management of natural resources on the Colville Indian Reservation for the period 2000–2014. This FEIS analyzes the impacts of seven alternatives, as follows:

Alternative 1, no action, would continue the existing management plan. About 1,071.2 million board feet (MMBF) of timber would be harvested across 157,573 acres, and the range management units and allotments on the reservation would be managed as they are now.

Alternative 2 calls for the harvesting of about 953.1 MMBF of timber across 156,989 acres and for a 15 percent general reduction in range use.

Alternative 3 calls for the harvesting of about 818.7 MMBF of timber across 119,683 acres and for the withdrawal of about 269,000 acres of range allotments.

Alternative 4 emphasizes intermediate harvesting to move the structural stage class of stands on the Reservation towards the desired future conditions. About 757.9 MMBF of timber would be harvested across 157,573 acres and allowable animal unit months (AUMs) would be doubled to 121,800.

Alternative 5 emphasizes regenerative harvesting in order to reduce the existing impacts of insects and disease. About 1,421.4 MMBF of timber would be harvested across 157,573 acres and AUMs would increase by 50 percent to 91,350.

Alternative 6 emphasizes forest and watershed health as well as fish and wildlife habitat. About 1,105.1 MMBF of timber would be harvested across 123,556 acres and AUMs would be reduced by 50 percent.

Alternative 7, the preferred alternative, is the IRMP. This emphasizes desired future conditions for all resources, including forest health, watershed health, range management, fish and wildlife management and land revenue goals. About 1,164.5 MMBF of timber would be harvested across 125,680 acres and AUMs would increase by 50 percent to 91,350.

**Public Comment Solicitation**

As an alternative to submitting written comments regarding the FEIS to the location identified in the **ADDRESSES** section, interested persons may instead comment via the Internet to jim.orwin@colvilletribes.com. Please submit Internet comments as an ASCII file, avoiding the use of special characters and any form of encryption. If you do not receive confirmation from the system that your Internet message was successfully received, contact us directly at (509) 634–2308.

Comments, including names and home addresses of respondents, will be available for public review at the mailing address shown in the **ADDRESSES** section during regular business hours, 7:30 a.m. to 4 p.m., Monday through Friday, except holidays. Individual respondents may

request confidentiality. If you wish to withhold your name and/or address from public review or from disclosure under the Freedom of Information Act, you must state this prominently at the beginning of your written comment. Such requests will be honored to the extent allowed by law. We will not, however, consider anonymous comments. All submissions from organizations or businesses, and from individuals identifying themselves as representatives or officials of organizations or businesses, will be made available for public inspection in their entirety.

## Authority

This notice is published pursuant to § 1503.1 of the Council of Environmental Quality Regulations (40 CFR, parts 1500 through 1508) implementing the procedural requirements of the National Environmental Policy Act of 1969, as amended (42 U.S.C. 437 *et seq.*) Department of the Interior Manual (510 DM1–7) and is in the exercise of authority delegated to the Assistant Secretary—Indian Affairs by 209 DM 8.

Dated: December 6, 2000.

**Kevin Gover,**

*Assistant Secretary—Indian Affairs.*

[FR Doc. 00–31951 Filed 12–14–00; 8:45 am]

BILLING CODE 4310–02–P

---

## DEPARTMENT OF THE INTERIOR

## Bureau of Land Management

**[WY–920–1320–EL, WYW146744]**

## Federal Coal Lease Application

**AGENCY:** Bureau of Land Management, Interior.

**ACTION:** Notice of availability of a draft environmental impact statement (DEIS) and notice of public hearing on the north Jacobs ranch federal coal lease application in the decertified Powder River federal coal production region, Wyoming.

**SUMMARY:** Pursuant to the National Environmental Policy Act (NEPA) and implementing regulations and other applicable statutes, the Bureau of Land Management (BLM) announces the availability of a DEIS for the North Jacobs Ranch Coal Lease Application, BLM serial number WYW146744, in the Wyoming Powder River Basin, and announces the scheduled date and place for a public hearing pursuant to 43 Code of Federal Regulations (CFR) 3425.4. The DEIS analyzes the impacts of issuing a Federal coal lease for the proposed North Jacobs Ranch Federal coal tract. The purpose of the hearing is to solicit public comments on the DEIS, the fair market value, the maximum economic recovery, and the proposed competitive sale of the coal included in the proposed North Jacobs Ranch Federal coal tract. The North Jacobs Ranch tract is being considered for sale as a result of a coal lease application received from Jacobs Ranch Coal Company (JRCC) on October 2, 1998. JRCC is a subsidiary of Kennecott Energy Company. The tract as applied for includes about 4,821.19 acres containing approximately 519 million tons of Federal coal reserves in Campbell County, Wyoming.

**DATES:** A public hearing will be held at 7 p.m. MDT, on January 17, 2001, at the Clarion Western Plaza Motel, 2009 S. Douglas Highway, Gillette, WY. An open house will start at 6:30 p.m., prior to the hearing, to answer questions related to the leasing process and this coal lease application. Written comments on the DEIS will be accepted for 60 days following the date that the Environmental Protection Agency (EPA) publishes their notice of availability of the DEIS in the **Federal Register**. We expect that the EPA will publish that notice on December 15, 2000.

**ADDRESSES:** Please address questions, comments or requests for copies of the Draft EIS to the Casper Field Office, BLM, Attn: Nancy Doelger, 2987 Prospector Drive, Casper, Wyoming 82601; or you may e-mail them to the attention of Nancy Doelger at casper__wymail@blm.gov; or fax them to 307–261–7587.

**FOR FURTHER INFORMATION CONTACT:** Nancy Doelger or Mike Karbs at the above address, or phone: 307–261–7600.

**SUPPLEMENTARY INFORMATION:** The application for the North Jacobs Ranch tract was filed as a maintenance tract coal lease-by-application (LBA) under the provisions of 43 CFR 3425.1

On October 2, 1998, JRCC filed coal lease application WYW146744 for the North Jacobs Ranch Federal coal tract with the BLM for the following lands:

*T. 44 N., R. 70 W., 6th P.M., Campbell County, Wyoming*

Sec. 26: Lots 9 and 10;
Sec. 27: Lots 1–16;
Sec. 28: Lots 1–16;
Sec. 29: Lots 1–16;
Sec. 30: Lots 5–20;
Sec. 31: Lots 5–20;
Sec. 32: Lots 1–16;
Sec. 33: Lots 4, 5, 12, 13.

*T. 44 N., R. 71 W., 6th P.M., Campbell County, Wyoming*

Sec. 25: Lots 1–16.

Total surface area applied for: 4,821.19 acres.

The Powder River Regional Coal Team (RCT) reviewed this competitive lease application at public meetings held on February 23, 1999, in Billings, Montana; October 27, 1999, in Gillette, Wyoming; and October 25, 2000, in Cheyenne, Wyoming. At these meetings, the RCT recommended that BLM process this LBA, pending resolution of the conflicts between proposed coal mining and existing and proposed oil and gas development, including proposed coalbed methane (CBM) development on the tract.

The Jacobs Ranch Mine, which is adjacent to the lease application area, has an approved mining and reclamation plan from the Land Quality Division of the Wyoming Department of Environmental Quality (DEQ) and an approved air quality permit from the Air Quality Division of the Wyoming DEQ to mine up to 38 million tons of coal per year through 2001, and 50 million tons of coal per year to be mined in 2002 through 2004. According to the application filed for the North Jacobs Ranch tract, the maintenance tract would be mined to extend the life of the existing mine. JRCC estimates that, under the current mine plan, the existing recoverable reserves at the Jacobs Ranch Mine will be mined out in about 7 years at an average production rate of 30 million tons per year. The Black Thunder Mine is also contiguous to the lease application area.

JRCC previously acquired a maintenance coal lease (serial number WYW117924, issued effective October 1, 1992), containing approximately 1,709 acres adjacent to the Jacobs Ranch Mine using the LBA process.

The DEIS analyzes four alternatives. The Proposed Action is to lease the North Jacobs Ranch tract as applied for to the successful bidder at a competitive sealed bid sale. The second alternative, Alternative 1, is the No Action Alternative, which assumes that the application for the North Jacobs Ranch tract is rejected. The third and fourth alternatives evaluate issuing a lease for a tract that has been modified to avoid bypassing coal in the future and/or to reduce multiple mineral development conflicts with existing oil and gas development.

The Office of Surface Mining Reclamation and Enforcement is a cooperating agency in the preparation of this EIS because it is the Federal agency that would recommend approval or disapproval of the mining plan for the North Jacobs Ranch LBA tract to the Secretary of the Interior, if a lease is issued for the tract.

During the scoping process, the issues that were identified related to this lease

application included: potential conflicts with existing conventional oil and gas development and proposed CBM development; potential cumulative impacts of increasing mineral development in the Powder River Basin; validity and currency of resource data; public access; potential impacts to threatened and endangered species and other species of concern; potential cumulative air quality impacts; potential impacts of nitrogen oxide emissions resulting from blasting of coal and overburden; and cumulative impacts of reasonably foreseeable actions such as the construction and operation of the DM&E railroad in the cumulative analysis.

Comments, including names and street addresses of respondents, will be available for public review at the BLM, Casper Field Office, 2987 Prospector Drive, Casper, WY, during regular business hours (8 a.m. to 4:30 p.m.), Monday through Friday, except holidays, and may be published as part of the final EIS. Individual respondents may request confidentiality. If you wish to withhold your name or street address from public review or from disclosure under the Freedom of Information Act, you must state this prominently at the beginning of your written comment. Such requests will be honored to the extent allowed by law. All submissions from organizations or businesses, and from individuals identifying themselves as representatives of officials of organizations or businesses, will be made available for public inspection in their entirety.

Dated: December 8, 2000.

**Lynn E. Rust,**

*Acting Deputy State Director, Minerals and Lands.*

[FR Doc. 00–31870 Filed 12–14–00; 8:45 am]

BILLING CODE 4310–22–P

## DEPARTMENT OF THE INTERIOR

## Bureau of Land Management

**[NV–910–01–0777–30]**

## Northeastern Great Basin Resource Advisory Council Meeting Location and Time

**AGENCY:** Bureau of Land Management, Interior.

**ACTION:** Resource Advisory Council's Meeting Location and Time.

**SUMMARY:** In accordance with the Federal Land Policy and Management Act and the Federal Advisory Committee Act of 1972 (FACA), 5 U.S.C., the Department of the Interior, Bureau of Land Management (BLM), Council meetings will be held as indicated below. The agenda for this meeting includes: Election of RAC Officers, weed free hay policy, proposed powerline in northeastern Nevada, Native American consultation presentation, status of Argenta Marsh, wild horse and burro program updates, update on sage grouse/sagebrush steppe habitat conservation planning, OHV update, and update on implementation of rangeland health standards and guidelines.

All meetings are open to the public. The public may present written comments to the Council. Each formal Council meeting will also have time allocated for hearing public comments. The public comment period for the Council meeting is listed below. Depending on the number of persons wishing to comment and time available, the time for individual oral comments may be limited. Individuals who plan to attend and need special assistance, such as sign language interpretation, tour transportation or other reasonable accommodations, should contact the BLM as provided below.

**DATES, TIMES, PLACE:** The time and location of the meeting is as follows: Northeastern Great Basin Resource Advisory Council, Nevada State Office, 1340 Financial Boulevard, Reno, Nevada 89502; January 5 starting at 8:00 a.m.; public comments will be at 10:00 a.m. and 2:00 p.m.; tentative adjournment at 3:00 p.m.

**FOR FURTHER INFORMATION CONTACT:** Diane Murray Public Affairs Specialist, Battle Mountain Field Office, 50 Bastian Road, Battle Mountain, NV 89820, telephone (775) 635–4000.

**SUPPLEMENTARY INFORMATION:** The purpose of the Council is to advise the Secretary of the Interior, through the BLM, on a variety of planning and management issues, associated with the management of the public lands.

**Helen Hankins,**

*Field Office Manager, Elko Field Office.*

[FR Doc. 00–31953 Filed 12–14–00; 8:45 am]

BILLING CODE 4310–HC–M

## DEPARTMENT OF THE INTERIOR

## Minerals Management Service

## Agency Information Collection Activities: Submitted for Office of Management and Budget (OMB) Review; Comment Request

**AGENCY:** Minerals Management Service (MMS), Interior.

**ACTION:** Notice of new information collection survey.

**SUMMARY:** To comply with the Paperwork Reduction Act of 1995 (PRA), we are submitting to OMB for review and approval an information collection request (ICR) to conduct a new survey on ''Gulf of Mexico Labor Needs.'' We are also soliciting comments from the public on this ICR.

**DATE:** Submit written comments by January 16, 2001.

**ADDRESSES:** You may submit comments directly to the Office of Information and Regulatory Affairs, OMB, Attention: Desk Officer for the Department of the Interior (1010–NEW), 725 17th Street, N.W., Washington, D.C. 20503. Mail or hand carry a copy of your comments to the Department of the Interior, Minerals Management Service, Attention: Rules Processing Team, Mail Stop 4024, 381 Elden Street; Herndon, Virginia 20170–4817.

Our practice is to make comments, including names and home addresses of respondents, available for public review during regular business hours. Individual respondents may request that we withhold their home address from the rulemaking record, which we will honor to the extent allowable by law. There may be circumstances in which we would withhold from the record a respondent's identity, as allowable by the law. If you wish us to withhold your name and/or address, you must state this prominently at the beginning of your comment. However, we will not consider anonymous comments. We will make all submissions from organizations or businesses, and from individuals identifying themselves as representatives or officials of organizations or businesses, available for public inspection in their entirety.

**FOR FURTHER INFORMATION CONTACT:** Alexis London, Rules Processing Team, telephone (703) 787–1600. For details on the proposed survey or to obtain a copy of the survey questions, you may contact Harry Luton, in the MMS Gulf of Mexico Regional Office, telephone (504) 736–2784.

**SUPPLEMENTARY INFORMATION:**

*Title:* Survey—Gulf of Mexico Labor Needs.

*OMB Control Number:* 1010–NEW.

*Abstract:* MMS is responsible for managing mineral resources on the Federal outer continental shelf (OCS). The National Environmental Policy Act (NEPA) of 1969, the Outer Continental Shelf Lands Act (OCSLA), as amended, the Coastal Zone Management Act (CZMA) of 1996, and the Endangered Species Act of 1973, require MMS to assess, mitigate, and monitor the effects of the OCS program on the environment.

The OCS oil and natural gas exploration and production industry impacts local and regional economies through many activities, including the demand for labor, the demand for services, and the demand for capital goods. Though thought to be in decline a decade ago, several mid-1990's changes have reinvigorated the industry. These include technical innovations such as three-and four-dimensional seismic surveys and subsurface completion systems that allow companies to operate in very deep water, as well as passage of the Deep Water Royalty Relief Act of 1995. This recent and unexpected growth has increased the significance and urgency of the need for MMS to obtain data on current Gulf of Mexico (GOM) OCS conditions and operating practices.

We propose to conduct a survey to collect and analyze information for use in MMS documents and management decisions. We will use the information within NEPA documents, with special emphasis on development in deep water. We will use the patterns and trends found in the data to support descriptions of how the GOM offshore oil and natural gas industry operates, how it resembles and differs from other regional markets, and what trends appear to be influencing its current direction. The OCSLA stipulates that MMS management of the OCS must include evaluations of the effects of industry activities on area resources. The CZMA policies on industrial and water use in the OCS affect many MMS decisions relating to planning, procedures, and interactions with industry, governments, and communities. The Endangered Species Act requires MMS to evaluate OCS activity and its affect on regional populations. The data collected through the proposed survey is necessary for MMS to successfully do each of these.

The information under the proposed data collection will be obtained by randomly sampling from the following eight populations: (1) Seismic companies; (2) platform and rig construction companies; (3) pipeline operating companies; (4) air transportation companies; (5) OCS field production operating companies; (6) employees from each of the previous sectors; (7) contracting organizations for operating companies; and (8) operating companies that have bid for a lease within the GOM. For the purposes of the proposed tests, an offshore employee ''earns money by working in any of three segments '' operating companies, service and supply companies, and transportation companies. The offshore worker charges time directly to GOM activities.'' The employee form will provide important economic information to supplement and cross check the industry data and will include demographic information to help characterize the economic effects of the program and the worker point of view concerning certain industry trends.

Questionnaire completion is voluntary. The questionnaires will be administered under the guidelines established under 45 CFR 46. Procedures designed to protect the confidentiality of the information provided will include the use of coded identification numbers to protect the identities of respondents and the businesses they represent. The final report will summarize data by geographic region, business type, or population category so that individual persons and companies will not be identifiable. Identifying information will be removed from data files.

We do not consider that the information requested in the proposed survey instruments necessitate a classification as Confidential Business Information. As stated, we will take efforts to ensure the anonymity of the collected data. As the test surveys are, and future surveys will be, voluntary, companies may choose not to respond to questions on proprietary information, but they can be assured that proprietary data will not be able to be associated with their company.

*Frequency:* This survey will be conducted once every 5 years.

*Estimated Number and Description of Respondents:* Estimated 6,338 respondents from the categories listed in the following chart.

*Estimated Annual Reporting and Recordkeeping ''Hour'' Burden:* Estimated 10,792 burden hours as described in the following chart.

| Respondent | Total hour burden (divided by) | Predicted no. of respondents (equals) | Predicted hour burden per respondent |
|---|---|---|---|
| Seismic | 292.25 | 21 | 13.9 |
| Platform/Rig Construction | 1,065.75 | 63 | 16.9 |
| Pipeline Operators | 473.00 | 34 | 13.9 |
| Air Transportation | 83.50 | 6 | 13.9 |
| Operators | 2,667.00 | 126 | 21.2 |
| Employees | 4,398.25 | 5,865 | 0.75 |
| Contractors | 1,622.75 | 189 | 8.6 |
| Bidders | 189.75 | 34 | 5.6 |
| Total | 10,792.25 | 6,338 | |

*Estimated Annual Reporting and Recordkeeping ''Non-Hour Cost'' Burden:* Beyond labor, the proposed information collection poses no cost burden to respondents. MMS will pay for all postage and telephone charges. Respondents will incur no capital and operation and maintenance costs.

*Comments:* The PRA (44 U.S.C. 3501, *et seq.*) provides that an agency may not conduct or sponsor, and a person is not required to respond to, a collection of information unless it displays a currently valid OMB control number. Section 3506(c)(2)(A) of the PRA requires each agency ''. . . to provide notice . . . and otherwise consult with members of the public and affected agencies concerning each proposed collection of information . . .'' Agencies must specifically solicit comments to: (a) Evaluate whether the proposed collection of information is necessary for the agency to perform its duties, including whether the information is useful; (b) evaluate the accuracy of the agency's estimate of the burden of the proposed collection of information; (c) enhance the quality, usefulness, and clarity of the information to be collected; and (d) minimize the burden on the respondents, including the use of automated collection techniques or other forms of information technology.

To comply with the public consultation process, on July 31, 2000, we published a **Federal Register** notice (65 FR 46733) with the required 60-day comment period announcing that we

would submit this ICR to OMB for approval. We received no comments in response to that initial notice. If you wish to comment in response to this notice, send your comments directly to the offices listed under the **ADDRESSES** section of this notice. The OMB has up to 60 days to approve or disapprove the information collection but may respond after 30 days. Therefore, to ensure maximum consideration, OMB should receive public comments by January 16, 2001.

*MMS Information Collection Clearance Officer:* Jo Ann Lauterbach, (202) 208–7744.

Dated: October 27, 2000.

**John V. Mirabella,**

*Acting Chief, Engineering and Operations Division.*

[FR Doc. 00–32005 Filed 12–14–00; 8:45 am]

**BILLING CODE 4310–MR–U**

## DEPARTMENT OF THE INTERIOR

### Minerals Management Service

### Environmental Assessment Preparation for Proposed Lease Sale 180 in the Western Gulf of Mexico (2001)

**AGENCY:** Minerals Management Service.

**ACTION:** Preparation of an environmental assessment.

**SUMMARY:** The Minerals Management Service (MMS) is beginning preparation of an environmental assessment (EA) for proposed Lease Sale 180 (scheduled for August 2001) in the Western Gulf of Mexico Planning Area. In January 1997, MMS issued a Call for Information and Nominations/Notice of Intent to Prepare an EIS (Call/NOI) for the four proposed Western Gulf of Mexico sales in the current 5-year leasing program. In 1998, MMS prepared a single Environmental Impact Statement (EIS) for all four sales. The multisale Final EIS, filed in May 1998, included an analysis of a single, typical sale, and a cumulative analysis that included the effects of holding all four sales, as well as the cumulative effects of the long-term development of the planning area. The MMS stated in the EIS that an EA would be prepared for each lease sale after the first sale covered in the EIS (Sale 171).

The preparation of this EA is the first step in the prelease decision process for Sale 180. The proposal and alternatives for Sale 180 were identified by the Director of MMS in January 1997 following the Call/NOI and were analyzed in the Western Gulf multisale EIS, which is available from the Gulf of Mexico OCS Region's Public Information Office at 1–800–200–GULF. The proposed action analyzed in the multisale EIS was the offering of all available unleased acreage in the Western Gulf of Mexico Planning Area, with the following exceptions: Blocks A–375 (East Flower Garden Bank) and A–398 (West Flower Garden Bank) in the High Island Area, East Addition, South Extension, designated as a national marine sanctuary; and Blocks 793, 799, and 816 in the Mustang Island Area, identified by the Navy as needed for testing equipment and for training mine warfare personnel. The proposal to be addressed in this EA has been revised to the following extent: two additional blocks or portions of these blocks (High Island Area, East Addition, South Extension, Block A–401 and High Island, South Addition, Block A–513), which lie partially within the Flower Gardens National Marine Sanctuary, are deferred from the proposed action in light of the President's June 1998 withdrawal of all Marine Sanctuaries from oil and gas leasing. The proposed action includes existing regulations and proposed lease stipulations designed to reduce environmental risks. The EA will also analyze alternatives to exclude blocks near biologically sensitive topographic features, as well as the no action alternative. The analysis in the EA will reexamine the potential environmental effects of the proposal and alternatives based on any new information regarding potential impacts and issues that was not available at the time the Final EIS was prepared.

The MMS requests interested parties to submit comments regarding any such new information or issues that should be addressed in the EA to Minerals Management Service, Gulf of Mexico OCS Region, Office of Leasing and Environment, Attention: Regional Supervisor (MS 5400), 1201 Elmwood Park Boulevard, New Orleans, Louisiana 70123–2394 by January 19, 2001. After completion of the EA, MMS will determine whether to prepare a Finding of No New Significant Impact (FONNSI) or a supplemental EIS. The MMS will then prepare and send consistency determinations to the affected States to determine whether the proposed sale is consistent with federally-approved State coastal zone management programs, and will send a proposed Notice of Sale to the Governors for their comments on the size, timing, and location of the proposed sale. The tentative schedule for the steps in the prelease decision process for Sale 180 are listed below:

Comments due to MMS, January 19, 2001;
EA/FONNSI or Supplemental EIS, March 2001;
Proposed Notice of Sale sent to Governors, March 2001;
Consistency Determinations sent to States, March 2001;
Final Notice of Sale in **Federal Register**, July 2001;
Sale, August 2001.

If you wish to comment, you may mail or hand-carry written comments to the Department of the Interior, Minerals Management Service, Regional Director (MS–5410), Minerals Management Service, Gulf of Mexico OCS Region, 1201 Elmwood Park Boulevard, New Orleans, Louisiana 70123–2394. Our practice is to make comments, including names and home addresses of respondents, available for public review during regular business hours. Individual respondents may request that we withhold their home address from the rulemaking record, which we will honor to the extent allowable by law. There may be circumstances in which we would withhold from the rulemaking record a respondent's identity, as allowable by the law. If you wish us to withhold your name and/or address, you must state this prominently at the beginning of your comment. However, we will not consider anonymous comments. We will make all submissions from organizations or businesses, and from individuals identifying themselves as representatives or officials of organizations or businesses, available for public inspection in their entirety.

**FOR FURTHER INFORMATION CONTACT:** Minerals Management Service, Gulf of Mexico OCS Region, 1201 Elmwood Park Boulevard, New Orleans, Louisiana 70123–2394, Mr. Dennis Chew, telephone (504) 736–2793.

Dated: December 11, 2000.

**Chris C. Oynes,**

*Regional Director, Gulf of Mexico OCS Region.*

[FR Doc. 00–31964 Filed 12–14–00; 8:45 am]

**BILLING CODE 4310–MR–P**

## DEPARTMENT OF THE INTERIOR

### National Park Service

### Concession Contract Negotiations; AK

**AGENCY:** National Park Service, Interior.

**ACTION:** Public Notice.

**SUMMARY:** The National Park Service proposes to offer a concession contract authorizing lodging, food and beverage, gifts and merchandise, rental of outdoor recreation equipment, ground transportation and other services for the public at Katmai National Park &

Preserve, Alaska from January 1, 2001 through December 31, 2005.

**EFFECTIVE DATE:** January 16, 2001.

**ADDRESSES:** National Park Service, Alaska Support Office, Concessions Division, 2525 Gambell St., Room 107, Anchorage, AK, 99503; telephone 907 257–2594, fax 907 264–5679.

**SUPPLEMENTARY INFORMATION:** This contract is being offered to the incumbent concessioner—Katmailand, Inc. on a sole-source basis in accordance with 36 CFR 13.82(e). The visitor services required and/or authorized by this contract continue to be consistent with the purposes for which Katmai National Park & Preserve was established, as required by 36 CFR 13.82(e).

Dated: November 30, 2000.

**Paul Anderson,**

*Deputy Regional Director, Alaska Region.*

[FR Doc. 00–32014 Filed 12–14–00; 8:45 am]

**BILLING CODE 4310–70–M**

## DEPARTMENT OF THE INTERIOR

## National Park Service

## Extension of Expiring Contracts For Up to One Year; Correction

**AGENCY:** National Park Service, Interior.

**ACTION:** Notice of correction.

**SUMMARY:** The National Park Service published notice of its intention to extend certain expiring concession contracts for a period of up to one year in the **Federal Register** on December 1, 2000 (pages 75296–75300). Certain contracts were incorrectly identified or improperly included in that notice. The following corrections should be made to that notice:

1. The following contracts are no longer in existence and should be deleted from the list:

| Concessioner identification no. | Concessioner name | Park |
|---|---|---|
| YELL135 | Linn Brothers Outfitting | Yellowstone National Park |
| YELL142 | JR Outfitting & Guide Service | Yellowstone National Park |
| YELL150 | Buffalo Horn Outfitters | Yellowstone National Park |
| YELL152 | Crossbow Outfitters | Yellowstone National Park |
| YELL154 | Star Valley Llama | Yellowstone National Park |
| YELL163 | Bar Diamond G | Yellowstone National Park |
| YELL171 | Swift Creek Outfitters | Yellowstone National Park |

2. The concessioners' names on the following contracts were listed incorrectly, and should be changed as follows:

| Concessioner identification no. | Concessioner name | Park |
|---|---|---|
| JODR007 | Goosewing Ranch Snowmobile Safaries | John D. Rockefeller Memorial Parkway |
| JODR012 | Cowboy Village Resort | John D. Rockefeller Memorial Parkway |
| YELL107 | Wyoming Backcountry Adventures | Yellowstone National Park |
| YELL108 | Bleu Sky Pack Station, Inc | Yellowstone National Park |
| YELL137 | Miller's Wilderness Park Trips | Yellowstone National Park |
| YELL147 | Farvalley Ranch | Yellowstone National Park |
| YELL149 | T Lazy T Outfitters | Yellowstone National Park |
| YELL156 | Two Ocean Pass Ranch | Yellowstone National Park |
| YELL159 | Ron Dube's Wilderness Adventures | Yellowstone National Park |
| YELL164 | Covered Wagon Ranch | Yellowstone National Park |
| YELL301 | Loomis Enterprises | Yellowstone National Park |
| YELL400 | Ace Snowmobile Tours | Yellowstone National Park |
| YELL408 | Two Top Snowmobile Tours | Yellowstone National Park |

**EFFECTIVE DATE:** December 15, 2000.

**FOR FURTHER INFORMATION CONTACT:** Cynthia Orlando, Concession Program Manager, National Park Service, Washington, DC 20240, Telephone (202) 565–1210.

Dated: December 11, 2000.

**Richard G. Ring,**

*Associate Director, Park Operations and Education.*

[FR Doc. 00–32015 Filed 12–14–00; 8:45 am]

**BILLING CODE 4310–70–M**

## DEPARTMENT OF THE INTERIOR

## National Park Service

## Tallgrass Prairie National Preserve, Kansas

**ACTION:** Record of Decision.

*Introduction:* The National Park Service has prepared the Final General Management Plan/Final Environmental Impact Statement (GMP/EIS) for Tallgrass Prairie National Preserve, Kansas. This Record of Decision is a statement of the decisions made, other alternatives considered, the basis for the decision, the environmentally preferable alternative, measures proposed to mitigate environmental harm, and public involvement in the decision-making process.

*Decision:* The National Park Service will implement the proposed action as described in the Preferred Alternative and the Actions Common to all Action Alternatives sections of the General Management Plan/Environmental Impact Statement issued in September 2000.

*Summary of the Selected Action:* The goal of the selected action is the integrated management of the natural and cultural resources of the preserve. Two fundamental ideas form the basis for the preferred alternative: (1) Tallgrass Prairie National Preserve has been established as a unit of the National Park System to preserve, protect, and interpret for the public a remnant of the once vast tallgrass prairie ecosystem, and (2) this remnant exists today because of a complex history of interaction between people and the land. The proposed management plan seeks to reflect this long history of interaction. Management areas will be designated to provide guidance for implementing desired future conditions and visitor experience goals.

The National Park Service (NPS) will enter into a long-term legal agreement with the landowner, the National Park Trust (NPT), to manage the preserve. Initially, the NPS will acquire, through

donation, approximately 29 acres of land from the NPT that includes the historic ranch headquarters and the Lower Fox Creek School areas.

The preserve will be managed to maintain and enhance the tallgrass prairie within its boundaries through the use of fire and historic and contemporary grazing regimes in different combinations that vary over time and location. Prescribed fire applications will make use of roads, fences, stream courses, topography, and burn frequencies to create a varied landscape or vegetative mosaic that will help maintain and enhance the tallgrass prairie and will encourage the wide variety of native plant and animal life associated with the prairie. Grazing regimes will include cattle and bison, separated by adequate fencing.

Decisions regarding natural and cultural resources will be guided by information generated through research and by ongoing inventory and monitoring programs.

Riparian areas will be protected from erosion and further loss of vegetation. Some bottomland prairie will be restored. Springs, seeps, and associated streams will receive additional protection if they are found to contain unique or rare native plant or animal species.

Some agricultural crops will be planted to create a historic scene, but no alien, non-indigenous species will be introduced into riparian areas or areas of native prairie. Existing exotic species that could impact preserve resources in a negative manner, or could spread rapidly, will be removed or controlled where practical.

Significant archeological and ethnological sites will be preserved and protected, and public access to these sites will be controlled. Specific resources may be made accessible to culturally affiliated tribes or traditionally associated groups by request. Any identified American Indian sacred sites will be protected, with access for sacred ceremonies allowed to appropriate tribes.

The ranching character of the area encompassing the historic ranch headquarters and the Lower Fox Creek School will be retained, with the buildings, associated structures, and landscape features restored, rehabilitated, and/or preserved.

A primary visitor information and orientation area will be developed near the junction of State Route 177 and U.S. 50, near Strong City. A variety of visitor activities and facilities appropriate for a national preserve will provide for a range of opportunities, time commitments, and levels of physical exertion. A range of on-site interpretive and educational programs will be offered, focusing on the natural history of the tallgrass prairie, ranching in the Flint Hills, and American Indian history and culture. A public transportation system, such as a shuttle, will be developed using existing roads and roadbeds to provide transportation, interpretive tours, and access to the prairie.

Lands east of the Fox Creek bottomland will provide day use opportunities for visitors to explore the prairie and its associated human history.

The NPS will actively seek partnerships and opportunities for cooperation with local communities, government agencies, nonprofit organizations, and other entities that may have an interest in helping to achieve the preserve's desired futures.

**Other Alternatives Considered**

*Alternative A, ''No Action.''* Tallgrass Prairie National Preserve represents an unusual situation in which to explore a ''no action'' alternative. The preserve is, and will remain, under the ownership of the National Park Trust (NPT), yet Congress has authorized the National Park Service (NPS) to manage the land. Currently an interim cooperative agreement is in place to allow the NPT and the NPS to work together to address the immediate operational needs. It is assumed that under this alternative the NPT would continue to own all the land and the NPS would continue to provide minimal management, in accordance with the terms of the interim agreement.

A 35-year grazing lease would continue on 98 percent of the preserve. Current practices include early intensive stocking and annual burning of all the leased acreage. An access agreement between the NPT and the lessee would determine public access to preserve lands. Brome would continue to grow on preserve lands and riparian areas would continue to be used by cattle.

Historic structures and portions of the landscape would receive routine or limited maintenance.

*Alternative B.* The primary focus of this alternative would be on the cultural resources of the preserve. The majority of the preserve would be designated a cultural area, where most of the cultural resources would be restored, stabilized, or preserved, and visitor access to these resources would be maximized. A small area of the preserve would be set aside for prairie enhancement activities and low-impact visitor activities. Motorized traffic would be limited and visitor opportunities would require greater time commitments and moderate effort.

*Alternative C.* The primary focus of this alternative would be on offering diverse visitor opportunities. There would be management areas within the preserve for moderate use and an area for dispersed use. The moderate use area would offer public transportation, while the dispersed use area would be restricted to nonmotorized means of access. Cultural resources representing ''best examples'' of the story of human interaction with the prairie would be restored and preserved, others would be stabilized. Cattle operations would include cow-calf and season-long grazing to allow visitors the opportunity to observe ranching operations in all seasons. Prairie enhancement activities would occur in the dispersed use area.

*Alternative D.* This alternative would offer a ''two-pronged'' focus on ranching and tallgrass prairie management. Demonstrations of ranching activities would occur and traditional row crops would be planted in some areas to re-create the historic agricultural and ranching scene. Cultural resources would be maintained and used adaptively for ranch operations, demonstrations, and visitor facilities. Prairie management would be designed to promote diversity of native species.

*Alternative E.* The primary focus of this alternative would be on enhancing the tallgrass prairie ecosystem, including its associated creeks, springs, and seeps. Management activities would be designed to establish a dynamic mosaic of successional stages resulting from the interaction of climate, fire, and grazing. More than half the preserve would consist of a large native ungulate management area where visitor access would be limited. Other areas of the preserve would offer visitors more access and opportunities, such as demonstrations of traditional cattle ranching practices and demonstrations of alternative prairie management practices. Cultural resources in the ranch headquarters and Lower Fox Creek School areas would be preserved and protected.

The following two additional alternatives were considered but rejected early in the planning process:

*Alternative F.* Under this alternative the preserve would have been managed as a modern working ranch. Historic structures would have been adaptively used and other structures would have been updated and improved to meet modern needs. Prairie enhancement activities probably would not have occurred to a large extent, due to the need for profitability. Visitor access to the prairie and to the historic ranch

headquarters area would have been limited for safety reasons, though visitors would have had the opportunity to observe how cattle are raised for market today.

Rehabilitation, restoration, and maintenance of the cultural resources and visitor access to those resources would have been very limited due to safety, liability concerns, and costs. Important elements of preservation and interpretation would be missing, including many of the cultural landscape elements. Significant changes might have been necessary to make the structures and facilities usable and efficient for ranching operations. These changes could have conflicted with the needs for interpretation, historic preservation, and visitor use.

Elements of the legislation, purpose, mission, desired futures, and visitor experience goals could not have been met under this alternative, because of safety, liability, and costs. The need to provide for operational efficiencies and profits in a modern ranching operation also could not be met.

*Alternative G.* Under this alternative, the majority of preserve lands would have been managed as a wilderness area. The historic ranch headquarters and Lower Fox Creek School areas would have been preserved, but most other developments would have been removed in order to restore all natural processes and enhance the prairie to the greatest extent possible. Visitor use would have been limited to nonmotorized and dispersed activities.

Alternative G placed the greatest, almost exclusive, emphasis on the natural resources. Therefore, important elements associated with the restoration, rehabilitation, and maintenance of the cultural resources, including the cultural landscapes, would have been lost through this alternative. Visitor understanding and appreciation of the history of human use of the preserve area would not have occurred with this alternative, particularly in relationship to the ranching resources.

*Environmentally Preferable Alternative:* The environmentally preferable alternative is defined as ''the alternative or alternatives that will promote the national environmental policy as expressed in Section 101 of the National Environmental Policy Act. Ordinarily, this means the alternative that causes least damage to the biological and physical environment; it also means the alternative that best protects, preserves, and enhances historic, cultural, and natural resources'' (''Forty Most Asked Questions Concerning Council on Environmental Quality's [CEQ] National Environmental Policy Act Regulations,'' 1981).

The last clause within this guidance is particularly relevant in identifying the environmentally preferable alternative for the Tallgrass Prairie National Preserve general management plan. Public Law 104–333 sets forth two purposes for the preserve. First, the preserve was established ''. . . to preserve, protect, and interpret for the public an example of a tallgrass prairie ecosystem . . .'' Second, the preserve was established ''. . . to preserve and interpret for the public the historic and cultural values represented on the Spring Hill Ranch.'' Preserving both the natural and cultural resources that are related to the tallgrass prairie requires careful balancing to ensure that neither type of resource receives inordinate adverse impacts.

In consideration of the dual purposes for which the preserve was established, the National Park Service has identified the Preferred Alternative as the environmentally preferable alternative. The preferred alternative would provide for greater expression of vegetative species diversity than other alternatives, and would have the lower impacts to vegetation from visitation and development. The alternative would provide for the greater knowledge of natural resources because of the emphasis on intensive inventory and monitoring programs and external research.

Alternative E shares these advantages. Alternative E also would provide for greater improvement to water quality. However, Alternative E would allow for more deterioration of cultural resources (as the emphasis of the alternative would be on the protection of the tallgrass prairie ecosystem). The Preferred Alternative, therefore, provides for more holistic protection of the preserve's resources.

*Basis for Decision*: While developing the various preliminary management alternatives, and through feedback from consultants and the public, the major focus of the proposed action was crystallized: the preserve represents a small remnant of the once vast tallgrass prairie and it is the long history of interaction of people with this land that has allowed that remnant to survive to this day. Thus, it was determined that the integration of the management of the cultural and natural resources, reflecting this long relationship of people and land, would be vital to the future protection of those resources and the interpretation of the story of the preserve. With that end in mind, the proposed action was developed out of the existing alternatives. It fully supports the park's purpose and significance; it accomplishes, to a great extent, the desired futures for the preserve; and it offers a broad level of both resource protection and visitor opportunities.

*Measures Proposed to Mitigate Environmental Harm*: All practicable measures to avoid or minimize environmental impacts that could result from implementation of the selected action have been identified and incorporated into the selected action. These measures are identified in the GMP/EIS. They include, but are not limited to, monitoring and management of natural and cultural resources, monitoring and management of visitor use, and continuing consultation with appropriate entities. Many other mitigation measures are described in the GMP.

Since the GMP/EIS offers a broad plan for the future, specific project and implementation plans will be developed later. These will be developed in compliance with the National Environmental Policy Act, the National Historic Preservation Act, and other applicable federal and state laws and regulations prior to project clearance and implementation.

*Public Involvement*: Five newsletters were produced; the first four issues went to all postal patrons in Chase County, to relevant agencies and organizations, and to those requesting to be on the mailing list. Chase County residents who requested to remain on the list were included in the mailing of the fifth issue. The planning mailing list currently contains approximately 1,435 addresses.

Informational open houses have been held throughout the planning process. Two were held in July 1997, in Cottonwood Falls and Topeka, to introduce the planning team and to explain the planning process. Two were held in October 1997, in Emporia and Council Grove, to provide an opportunity for the public to ask questions about planning activities and to share information. One hundred forty-one people attended these meetings. Two hundred sixty-seven written comments were received early in the planning effort, expressing thoughts and concerns about a vision for the future of the preserve.

In June 1998, when the preliminary management alternatives were developed, four open houses were held to present these alternatives: one each in Strong City, Wichita, Council Grove, and Lawrence. A total of 245 people attended those meetings, and during the comment period, 324 written comments were received.

Open houses were again held in these four cities and in Topeka, in February 1999, when the draft preferred alternative was developed. One hundred fifty-six people attended these meetings; 215 written comments were received.

About 500 copies of the Draft GMP/EIS were distributed to the public, interest groups, and government agencies in late 1999. In conjunction with the 60-day public review of the Draft GMP/EIS open houses were held in Cottonwood Falls, Wichita, and Lawrence. A total of 70 people attended these open houses. During the comment period, 69 written public comments were received. Copies of the plan were available for review in local government offices and libraries.

The Tallgrass Prairie National Preserve worldwide website (*www.nps.gov/tapr*) has contained planning information since June 1997, and electronic comment sheets were posted there during the public comment period for the preliminary alternatives, draft preferred alternative, and Draft GMP/EIS. Approximately 87 comments were received through that medium.

Newsletters and response forms were available at the preserve's administrative offices in Cottonwood Falls, Kansas as well as at the historic ranch headquarters, two miles north of Strong City, Kansas.

*Conclusion*: A notice of availability for the General Management Plan/Environmental Impact Statement for Tallgrass Prairie National Preserve was published in the **Federal Register** by the Environmental Protection Agency on October 20, 2000 and the 30-day no-action period ended on November 20, 2000. The National Park Service distributed approximately 315 copies of the Final GMP/EIS during this period. Eight letters commenting on the Final GMP/EIS were received. These letters either expressed support for the preferred alternative, repeated issues already addressed in responses to comments on the draft document, or raised issues more appropriately addressed in follow-up implementation planning. No changes to the GMP/EIS were made in response to comments on the final document.

The above factors and considerations justify the selection of the final plan, as described in the ''Proposed Action'' and ''Actions Common to All Action Alternatives'' sections of the Final Environmental Impact Statement. The General Management Plan is hereby approved.

**Recommended:**

Dated: December 4, 2000.

**Stephen T. Miller,**

*Superintendent, Tallgrass Prairie National Preserve.*

Approved:
Dated: December 5, 2000.

**David N. Given,**

*Acting Regional Director, Midwest Region.*

[FR Doc. 00–31914 Filed 12–14–00; 8:45 am]

BILLING CODE 4310–70–P

## DEPARTMENT OF THE INTERIOR

### Bureau of Reclamation

### Colorado River Interim Surplus Criteria

**AGENCY:** Bureau of Reclamation, Department of the Interior.

**ACTION:** Notice of availability of a final environmental impact statement for the proposed adoption of Colorado River Interim Surplus Criteria: FES 00 52.

**SUMMARY:** Pursuant to Section 102(2)(C) of the National Environmental Policy Act (NEPA) of 1969, as amended, and the Council on Environmental Quality's Regulations for Implementing the Procedural Provisions of NEPA, the Bureau of Reclamation (Reclamation), has issued a Final Environmental Impact Statement (FEIS) on the proposed adoption of specific criteria under which surplus water conditions may be determined in the Lower Colorado River Basin during the next 15 years.

**DATES:** Reclamation will issue a Record of Decision no sooner than January 16, 2001.

**ADDRESSES:** See **SUPPLEMENTARY INFORMATION** for locations and addresses where copies of the document may be reviewed.

**FOR FURTHER INFORMATION CONTACT:** For additional information, contact Ms. Jayne Harkins at the above address or telephone Ms. Harkins at (702) 293–8785. The FEIS is available for viewing on the Internet at *http://www.lc.usbr.gov* and *http://www.uc.usbr.gov*. Copies of the FEIS, in the form of a printed document or on compact disk, are available upon written request to Ms. Janet Steele, Attention BCOO–4601, PO Box 61470, Boulder City, Nevada 89006–1470, Telephone: (702) 293–8785, or by fax at (702) 293–8042.

**SUPPLEMENTARY INFORMATION:** The Secretary of the Interior (Secretary) manages the lower Colorado River system in accordance with federal law (including the provisions of the 1964 U.S. Supreme Court decree, as supplemented, in *Arizona* v. *California* (the Decree), the Colorado River Basin Project Act of 1968 (CRBPA) and Long Range Operating Criteria (LROC) adopted pursuant to the CRBPA). Within this legal framework, the Secretary makes annual determinations regarding the availability of surplus water from Lake Mead by considering various factors, including the amount of water in storage and predictions for natural runoff. Pursuant to Article II(B)2 of the Decree, if there exists sufficient water available in a single year for pumping or release from Lake Mead to satisfy annual consumptive use in the states of California, Nevada, and Arizona in excess of 7.5 million-acre feet (maf), such water may be determined by the Secretary to be made available as ''surplus'' water. The Secretary is authorized to determine the conditions upon which such water may be made available.

The purpose of and need for establishing interim surplus criteria is to assist the Secretary in making annual determinations of surplus conditions, and will afford entities that have contracted for surplus water a greater degree of predictability with respect to the annual existence of surplus water available for diversion. This greater predictability would assist these entities in the management of their water resources.

The FEIS presents five possible action alternatives for implementation, plus a No Action Alternative. The action alternatives have been formulated to be consistent with applicable federal law and would serve to implement Article III (3)(B) of the LROC, described above. The five potential action alternatives are (1) ''Flood Control Alternative,'' which would provide surplus water only when flood control releases from Lake Mead are needed, (2) ''Basin States Alternative'' (Preferred Alternative), (3) ''Six States Alternative'' and (4) ''California Alternative,'' all of which specify various Lake Mead water surface elevations to be used as ''triggers'' to indicate when surplus conditions exist; and (5) ''Shortage Protection Alternative,'' which is based on maintaining an amount of water in Lake Mead necessary to provide a normal annual supply of 7.5 maf for the Lower Division, 1.5 maf for Mexico and storage necessary to provide an 80 percent protection for the critical Lake Mead water elevation of 1083 mean sea level (minimum power generation elevation).

**Libraries Where the Draft EIS Is Available for Public Review**

- Department of the Interior, Natural Resources Library, 1849 C Street, NW, Washington, DC 20240.

- Lower Colorado Regional Office, PO Box 61470, Boulder City, Nevada 89006–1470.
- Phoenix Area Office, Concorde Commerce Center, 2222 West Dunlap Ave., Suite 100, Phoenix, Arizona 85069–1169.
- Yuma Area Office, 7301 Calle Aqua Salada, Yuma, Arizona, 85366–7504.
- Upper Colorado Regional Office, 125 South State St., Room 6107, Salt Lake City, Utah 84138–1102.
- Boulder City Library, 813 Arizona, Boulder City, NV 89005.
- Henderson District Public Library, 280 South Water St., Henderson, NV 89015.
- Los Angeles Central Library, 630 W 5th St. Los Angeles, CA 90071.
- San Diego Central Library, 820 E St., San Diego, CA 92101.
- Salt Lake City Public Library, 209 E 500 S., Salt Lake City, UT 84111.
- Albuquerque Public Library, 501 Copper Ave. NW, Albuquerque, NM 87102.
- Denver Public Library, 10 W 14th Ave. Pkwy, Denver, CO 80204.
- Laramie County Library, 2800 Central Ave., Cheyenne, WY 82001.
- Phoenix Public Library (Burton Barr Central), 1221 N. Central Ave., AZ 85004.
- Government Reference Library, c/o Jo Reister, Tucson Pima Main Library, 101 North Stone Avenue, Tucson, AZ 85701.
- Mohave County Library, 1170 Hancock Rd., Bullhead City, AZ 86442.
- San Bernardino County Library, 1111 Bailey Ave., Needles, CA 92363.
- Lake Havasu City Library, 1787 McCulloch Blvd. North, Lake Havasu City, AZ, 86403.
- Parker Public Library, 1001 South Navajo Ave., Parker, AZ 85344.
- Palo Verde Valley Library, 125 W. Chanslor Way, Blythe, CA 92225.
- Yuma County Library, 350 S. 3rd Ave., Yuma, AZ 85364.

Dated: December 5, 2000.

**Willie R. Taylor,**

*Director, Office of Environmental Policy and Compliance, Department of the Interior.*

[FR Doc. 00–31962 Filed 12–14–00; 8:45 am]

BILLING CODE 4310–MN–P

## DEPARTMENT OF THE INTERIOR

### Office of Surface Mining Reclamation and Enforcement

### Notice of Proposed Information Collection

**AGENCY:** Office of Surface Mining Reclamation and Enforcement.

**ACTION:** Notice and request for comments.

**SUMMARY:** In compliance with the Paperwork Reduction Act of 1995, the Office of Surface Mining Reclamation and Enforcement (OSM) is announcing its intention to request renewed approval for the collection of information under 30 CFR part 840, Permanent Program Inspection and Enforcement Procedures. The collection described below has been forwarded to the Office of Management and Budget (OMB) for review and comment. The information collection request describes the nature of the information collection and the expected burden and cost.

**DATES:** OMB has up to 60 days to approve or disapprove the information collection but may respond after 30 days. Therefore, public comments should be submitted to OMB by January 16, 2001, in order to be assured of consideration.

**FOR FURTHER INFORMATION CONTACT:** To request a copy of the information collection request, explanatory information and related form, contact John A. Trelease at (202) 208–2783, or electronically to jtreleas@osmre.gov.

**SUPPLEMENTARY INFORMATION:** The Office of Management and Budget (OMB) regulations at 5 CFR 1320, which implement provisions of the Paperwork Reduction Act of 1995 (Pub. L. 104–13), require that interested members of the public and affected agencies have an opportunity to comment on information collection and recordkeeping activities [see 5 CFR 1320.8(d)]. OSM has submitted a request to OMB to renew its approval for the collection of information in 30 CFR part 840, Permanent Program Inspection and Enforcement Procedures. OSM is requesting a 3-year term of approval for this information collection activity.

An agency may not conduct or sponsor, and a person is not required to respond to, a collection of information unless it displays a currently valid OMB control number. The OMB control number for this collection of information is 1029–0051 and codified at 30 CFR 840.10.

As required under 5 CFR 1320.8(d), a **Federal Register** notice soliciting comments on these collections of information was published on September 22, 2000 (65 FR 57371). No comments were received. This notice provides the public with an additional 30 days in which to comment on the following information collection activity:

*Title:* Permanent Program Inspection and Enforcement Procedures, 30 CFR Part 840.

*OMB Control Number:* 1029–0051.

*Abstract:* This provision requires the regulatory authority to conduct periodic inspections of coal mining activities, and prepare and maintain inspection reports for the public review. This information is necessary to meet the requirements of the Surface Mining Control and Reclamation Act of 1977 and its public participation provisions. Public review assures the public that the State is meeting the requirements for the Act and approved State regulatory program.

*Bureau Form Number:* None.

*Frequency of Collection:* Once, monthly, quarterly, annually.

*Description of Respondents:* State Regulatory Authorities.

*Total Annual Responses:* 99,013.

*Total Annual Burden Hours:* 578,509.

Send comments on the need for the collection of information for the performance of the functions of the agency; the accuracy of the agency's burden estimates; ways to enhance the quality, utility and clarity of the information collection; and ways to minimize the information collection burden on respondents, such as use of automated means of collection of the information, to the following addresses. Please refer to the appropriate OMB control number in all correspondence.

**ADDRESSES:** Office of Information and Regulatory Affairs, Office of Management and Budget, Attention: Department of the Interior Desk Officer, 725 17th Street, NW, Washington, DC 20503. Also, please send a copy of your comments to John A. Trelease, Office of Surface Mining Reclamation and Enforcement, 1951 Constitution Ave, NW., Room 210–SIB, Washington, DC 20240, or electronically to jtreleas@osmre.gov.

Dated: December 11, 2000.

**Richard G. Bryson,**

*Chief, Division of Regulatory Support.*

[FR Doc. 00–32040 Filed 12–14–00; 8:45 am]

BILLING CODE 4310–05–M

## DEPARTMENT OF LABOR

### Office of the Secretary

### Sumbission for OMB Review; Comment Request

December 7, 2000.

The Department of Labor (DOL) has submitted the following public information collection request (ICR) to the Office of Management and Budget (OMB) for review and approval in accordance with the Paperwork Reduction Act of 1995 (Pub. L. 104–13, 44 U.S.C. Chapter 35). A copy of each

individual ICR, with applicable supporting documentation, may be obtained by calling the Department of Labor. To obtain documentation for BLS, ETA, PWBA, and OASAM contact Karin Kurz ((202) 693–4127 or by E-mail to Kurz-Karin@dol.gov). To obtain documentation for ESA, MSHA, OSHA, and VETS contact Darrin King ((202) 693–4129 or by E-Mail to King-Darrin@dol.gov).

Comments should be sent to Office of Information and Regulatory Affairs, Attn: OMB Desk Officer for BLS, DM, ESA, ETA, MSHA, OSHA, PWBA, or VETS, Office of Management and Budget, Room 10235, Washington, DC 20503 (202) 395–7316, within 30 days from the date of this publication in the **Federal Register**.

The OMB is particularly interested in comments which:

• Evaluate whether the proposed collection of information is necessary for the proper performance of the functions of the agency, including whether the information will have practical utility;

• Evaluate the accuracy of the agency's estimate of the burden of the proposed collection of information, including the validity of the methodology and assumptions used;

• Enhance the quality, utility, and clarity of the information to be collected; and

• Minimize the burden of the collection of information on those who are to respond, including through the use of appropriate automated, electronic, mechanical, or other technological collection techniques or other forms of information technology, e.g., permitting electronic submission of responses.

*Type of Review:* Revision of a currently approved collection.

*Agency:* Bureau of Labor Statistics.

*Title:* Multiple Worksite Report (MWR) and the Report of Federal Employment and Wages (RFEW).

*OMB Number:* 1220–0134.

*Affected Public:* Business or other for-profit institutions; not for-profit institutions; Federal Government; and State, Local or Tribal government.

*Frequency:* Quarterly.

| Form no. | Total respondents | Respondent | Total responses | Average time per response (in minutes) | Total burden (hours) |
|---|---|---|---|---|---|
| BLS 3020 (MWR) | 112,783 | Non-Federal | 451,132 | 22.2 | 166,919 |
| BLS 3021 (RFEW) | 1,984 | Federal | 7,936 | 22.2 | 2,936 |
| Totals | 114,767 | | 459,068 | | 169,855 |

*Total annualized capital/startup costs:* $0.

*Total annual costs (operating/maintaining systems or purchasing services):* $0.

*Description:* States use the Multiple Worksite Report to collect employment and wages data by worksite from employers covered by State Unemployment Insurance which are engaged in multiple operations within a State. These data are used for sampling, benchmarking, and economic analysis.

**Ira L. Mills,**

*Departmental Clearance Officer.*

[FR Doc. 00–31988 Filed 12–14–00; 8:45 am]

**BILLING CODE 4510–24–M**

## DEPARTMENT OF LABOR

### Employment Standards Administration, Wage and Hour Division

### Minimum Wages for Federal and Federally Assisted Construction; General Wage Determination Decisions

General wage determination decisions of the Secretary of Labor are issued in accordance with applicable law and are based on the information obtained by the Department of Labor from its study of local wage conditions and data made available from other sources. They specify the basic hourly wage rates and fringe benefits which are determined to be prevailing for the described classes of laborers and mechanics employed on construction projects of a similar character and in the localities specified therein.

The determinations in these decisions of prevailing rates and fringe benefits have been made in accordance with 29 CFR Part 1, by authority of the Secretary of Labor pursuant to the provisions of the Davis-Bacon Act of March 3, 1931, as amended (46 Stat. 1494, as amended, 40 U.S.C. 276a) and of other Federal statutes referred to in 29 CFR Part 1, Appendix, as well as such additional statutes as may from time to time be enacted containing provisions for the payment of wages determined to be prevailing by the Secretary of Labor in accordance with the Davis-Bacon Act. The prevailing rates and fringe benefits determined in these decisions shall, in accordance with the provisions of the foregoing statutes, constitute the minimum wages payble on Federal and federally assisted construction projects to laborers and mechanics of the specified classes engaged on contract work of the character and in the localities described therein.

Good cause is hereby found for not utilizing notice and public comment procedure thereon prior to the issuance of these determinations as prescribed in 5 U.S.C. 553 and not providing for delay in the effective date as prescribed in that section, because the necessity to issue current construction industry wage determinations frequently and in large volume causes procedures to be impractical and contrary to the public interest.

General wage determination decisions, and modifications and supersedes decisions thereto, contain no expiration dates and are effective from their date of notice in the **Federal Register,** or on the date written notice is received by the agency, whichever is earlier. These decisions are to be used in accordance with the provisions of 29 CFR Parts 1 and 5. Accordingly, the applicable decision, together with any modifications issued, must be made a part of every contract for performance of the described work within the geographic area indicated as required by an applicable Federal prevailing wage law and 29 CFR Part 5. The wage rates and fringe benefits, notice of which is published herein, and which are contained in the Government Printing Office (GPO) document entitled ''General Wage Determinations Issued Under The Davis-Bacon And Related Acts,'' shall be the minimum paid by contractors and subcontractors to laborers and mechanics.

Any person, organization, or governmental agency having an interest in the rates determined as prevailing is encouraged to submit wage rate and fringe benefit information for consideration by the Department. Further information and self-explanatory forms for the purpose of submitting this data may be obtained by writing to the U.S. Department of Labor, Employment Standards Administration,

Wage and Hour Division, Division of Wage Determinations, 200 Constitution Avenue, NW., Room S–3014, Washington, DC 20210.

**Withdrawn General Wage Determination Decisions**

This is to advise all interested parties that the Department of Labor is withdrawing, from the date of this notice, the following General Wage Determination Decisions:

ME000017—See ME000016
ME000018—See ME000004
ME000019—See ME000005
ME000020—See ME000005
ME000021—See ME000005 and ME0000008
ME000022—See ME000007
ME000023—See ME000008
ME000024—See ME000015
ME000025—See ME000012
ME000026—See ME000006
ME000027—See ME000006
ME000028—See ME000029
ME000030—See ME000003
ME000031—See ME000009
ME000032—See ME000010
ME000033—See ME000009
ME000034—See ME000009
ME000035—See ME000009
ME000036—See ME000009 and ME000011
ME000037—See ME000005
ME000038—See ME000005

Contracts for which bids have been opened shall not be affected by this notice. Also, consistent with 29 CFR 1.6(c)(2)(i)(A), when the opening of bids is less than ten (10) days from the date of this notice, this action shall be effective unless the agency finds that there is insufficient time to notify bidders of the change and the finding is documented in the contract file.

**Modifications to General Wage Determination Decisions**

The number of decisions listed in the Government Printing Office document entitled ''General Wage Determinations Issued Under the Davis-Bacon and related Acts'' being modified are listed by Volume and State. Dates of publication in the **Federal Register** are in parentheses following the decisions being modified.

*VOLUME I*

NEW HAMPSHIRE
NH000003 (FEB. 11, 2000)

*VOLUME II*

PENNSYLVANIA
PA000012 (FEB. 11, 2000)

*VOLUME III*

FLORIDA
FL000017 (FEB. 11, 2000)
SOUTH CAROLINA
SC000023 (FEB. 11, 2000)

*VOLUME IV*

MICHIGAN
MI000013 (FEB. 11, 2000)
MI000062 (FEB. 11, 2000)
MI000076 (FEB. 11, 2000)
MI000077 (FEB. 11, 2000)
MI000078 (FEB. 11, 2000)
MI000079 (FEB. 11, 2000)
MI000080 (FEB. 11, 2000)
MI000081 (FEB. 11, 2000)
MI000082 (FEB. 11, 2000)
MI000083 (FEB. 11, 2000)
MI000084 (FEB. 11, 2000)
MI000085 (FEB. 11, 2000)
MI000087 (FEB. 11, 2000)
MI000088 (FEB. 11, 2000)
MI000099 (FEB. 11, 2000)
MI000100 (FEB. 11, 2000)
MI000101 (FEB. 11, 2000)

*VOLUME V*

IOWA
IA000001 (FEB. 11, 2000)
IA000002 (FEB. 11, 2000)
IA000004 (FEB. 11, 2000)
KANSAS
KS000008 (FEB. 11, 2000)
KS000009 (FEB. 11, 2000)
KS000016 (FEB. 11, 2000)
KS000019 (FEB. 11, 2000)
KS000020 (FEB. 11, 2000)
KS000021 (FEB. 11, 2000)
KS000022 (FEB. 11, 2000)
KS000023 (FEB. 11, 2000)
KS000025 (FEB. 11, 2000)
KS000069 (FEB. 11, 2000)
KS000070 (FEB. 11, 2000)
NEBRASKA
NE000003 (FEB. 11, 2000)
NE000010 (FEB. 11, 2000)
TEXAS
TX000001 (FEB. 11, 2000)
TX000002 (FEB. 11, 2000)
TX000007 (FEB. 11, 2000)
TX000008 (FEB. 11, 2000)
TX000019 (FEB. 11, 2000)
TX000069 (FEB. 11, 2000)
TX000081 (FEB. 11, 2000)

*VOLUME VI*

NONE

*VOLUME VII*

CALIFORNIA
CA000009 (FEB. 11, 2000)
CA000028 (FEB. 11, 2000)

**General Wage Determination Publication**

General wage determination issued under the Davis-Bacon and related Acts, including those noted above, may be found in the Government Printing Office (GPO) document entitled ''General Wage Determinations Issued Under The Davis-Bacon and Related Acts.'' This publication is available at each of the 50 Regional Government Depository Libraries and many of the 1,400 Government Depository Libraries across the country.

The general wage determinations issued under the Davis-Bacon and related Acts are available electronically by subscription to the FedWorld Bulletin Board System of the National Technical Information Service (NTIS) of the U.S. Department of Commerce at 1–800–363–2068.

Hard-copy subscriptions may be purchased from: Superintendent of Documents, U.S. Government Printing Office, Washington, DC 20402, (202) 512–1800.

When ordering hard-copy subscription(s), be sure to specify the State(s) of interest, since subscriptions may be ordered for any or all of the seven separate volumes, arranged by State. Subscriptions include an annual edition (issued in January or February) which includes all current general wage determinations for the States covered by each volume. Throughout the reminder of the year, regular weekly updates are distributed to subscribers.

Signed at Washington, D.C. this 7th day of December, 2000.

**Terry Sullivan,**

*Acting Chief, Branch of Construction Wage Determinations.*

[FR Doc. 00–31718 Filed 12–14–00; 8:45 am]

BILLING CODE 4510–27–M

## FEDERAL MINE SAFETY AND HEALTH REVIEW COMMISSION

### Sunshine Act Meeting

December 11, 2000.

**FEDERAL REGISTER** Citation of previous announcement: Vol. 65, No. 236, at 76669, December 7, 2000.

**Previously Announced**

**TIME AND DATE:** 2:00 p.m., Tuesday, December 12, 2000.

**PLACE:** Room 6005, 6th Floor, 1730 K Street, N.W., Washington, D.C.

**STATUS:** Open.

**CHANGES IN THE MEETING:** The Commission meeting to consider and act upon Northern Illinois Steel Supply Co., Docket No. LAKE 99–78–RM, etc., has been canceled. No earlier announcement of the cancellation was possible.

**Previously Announced**

**TIME AND DATE:** The Commission meeting will commence following upon the conclusion of the Commission meeting to consider Northern Illinois Steel Supply Co., Docket No. LAKE 99–78–RM, etc., which commences at 2:00 p.m. on Tuesday, December 12, 2000.

**PLACE:** Room 6005, 6th Floor, 1730 K Street, N.W., Washington, D.C.

**STATUS:** Closed [Pursuant to 5 U.S.C. § 552b(c)(10)].

**MATTERS TO BE CONSIDERED:** As a result of the cancellation of the Commission

meeting to consider Northern Illinois Steel Supply Co., Docket No. LAKE 99–78–RM, etc., the Commission meeting to consider Disciplinary Proceeding, Docket No. D 2000–1, will commence at 2:00 p.m. on Tuesday, December 12, 2000. No earlier announcement of the change in meeting time was possible.

**CONTACT PERSON FOR MORE INFO:** Jean Ellen (202) 653–5629/(202) 708–9300 for TDD Relay/1–800–877–8339 for toll free.

**Jean Ellen,**

*Chief Docket Clerk.*

[FR Doc. 00–32193 Filed 12–13–00; 4:02 pm]

**BILLING CODE 6735–01–M**

## U.S. NUCLEAR REGULATORY COMMISSION

### Agency Information Collection Activities: Proposed Collection; Comment Request

**AGENCY:** U.S. Nuclear Regulatory Commission (NRC).

**ACTION:** Notice of pending NRC action to submit an information collection request to OMB and solicitation of public comment.

**SUMMARY:** The NRC is preparing a submittal to OMB for review of continued approval of information collections under the provisions of the Paperwork Reduction Act of 1995 (44 U.S.C. Chapter 35).

Information pertaining to the requirement to be submitted:

1. The title of the information collection: Policy Statement for the ''Criteria for Guidance of States and NRC in Discontinuance of NRC Regulatory Authority and Assumption Thereof By States Through Agreement,'' Maintenance of Existing Agreement State Programs, Request for Information through the Integrated Materials Performance Evaluation Program (IMPEP) Questionnaire, and Agreement State Participation in IMPEP.

2. Current OMB approval number: 3150–0183.

3. How often the collection is required: There are four activities that occur under this collection: IMPEP reviews conducted no less frequently than every four years; for States interested in becoming Agreement States; participation by Agreement States in the IMPEP reviews; and annual requirements for Agreement States to maintain their programs.

4. Who is required or asked to report: Any State receiving Agreement State status by signing Section 274b agreements with the NRC and any State interested in becoming an Agreement State. Presently, there are 32 Agreement States.

5. The number of annual respondents: 32.

6. The number of hours needed annually to complete the requirement or request: For States interested in becoming an Agreement State: Approximately 4,300 hours. For Agreement State participation in 9 IMPEP reviews (8 State and 1 NRC Region): 324 hours (an average of 36 hours per review). For maintenance of existing Agreement State programs: 239,040 hours (an average of 7,470 hours per State). For Agreement State response to 8 IMPEP questionnaires: 424 hours (an average of 53 hours per program). The total number of hours annually is 244,088 hours.

7. Abstract: States wishing to become an Agreement State are requested to provide certain information to the NRC as specified by the Commission's Policy Statement, ''Criteria for Guidance of States and NRC in Discontinuance of NRC Regulatory Authority and Assumption Thereof By States Through Agreement.'' Agreement States need to ensure that the Radiation Control Program under the Agreement remains adequate and compatible with the requirements of Section 274 of the Atomic Energy Act (Act) and must maintain certain information. NRC conducts periodic evaluations through IMPEP to ensure that these programs are compatible with the NRC's, meet the applicable parts of the Act, and are adequate to protect public health and safety.

Submit, by February 13, 2001, comments that address the following questions:

1. Is the proposed collection of information necessary for the NRC to properly perform its functions? Does the information have practical utility?

2. Is the burden estimate accurate?

3. Is there a way to enhance the quality, utility, and clarity of the information to be collected?

4. How can the burden of the information collection be minimized, including the use of automated collection techniques or other forms of information technology?

A copy of the draft supporting statement may be viewed free of charge at the NRC Public Document Room, One White Flint North, 11555 Rockville Pike, Room O–1 F23, Rockville, Maryland 20852. OMB clearance requests are available at the NRC worldwide web site (http://www.nrc.gov/NRC/PUBLIC/OMB/index.html). The document will be available on the NRC home page site for 60 days after the signature date of this notice.

Comments and questions about the information collection requirements may be directed to the NRC Clearance Officer, Brenda Jo. Shelton, U.S. Nuclear Regulatory Commission, T–6 E6, Washington, DC 20555–0001, by telephone at 301–415–7233, or by Internet electronic mail at BJS1@NRC.GOV.

Dated at Rockville, Maryland, this 11th day of December 2000.

For the Nuclear Regulatory Commission.

**Brenda Jo. Shelton,**

*NRC Clearance Officer, Office of the Chief Information Officer.*

[FR Doc. 00–31966 Filed 12–14–00; 8:45 am]

**BILLING CODE 7590–01–P**

## U.S. NUCLEAR REGULATORY COMMISSION

### Agency Information Collection Activities: Proposed Collection; Comment Request

**AGENCY:** U.S. Nuclear Regulatory Commission (NRC).

**ACTION:** Notice of pending NRC action to submit an information collection request to OMB and solicitation of public comment.

**SUMMARY:** The NRC is preparing a submittal to OMB for review of continued approval of information collections under the provisions of the Paperwork Reduction Act of 1995 (44 U.S.C. Chapter 35).

Information pertaining to the requirement to be submitted:

1. The title of the information collection:

NRC Forms 540 and 540A, Uniform Low-Level Radioactive Waste Manifest (Shipping Paper) and Continuation Page

NRC Forms 541 and 541A, Uniform Low-Level Radioactive Waste Manifest, Container and Waste Description, and Continuation Page

NRC Forms 542 and 542A, Uniform Low-Level Radioactive Waste Manifest, Index and Regional Compact Tabulation

NRC Forms 540 and 540A: 3150–0164

NRC Forms 541 and 541A: 3150–0166

NRC Forms 542 and 542A: 3150–0165

3. How often the collection is required: Forms are used by shippers whenever radioactive waste is shipped. Quarterly reporting or less frequent is made to NRC depending on specific license conditions.

4. Who is required or asked to report: All NRC-licensed low-level waste facilities. All generators, collectors, and

processors of low-level waste intended for disposal at a low-level waste facility must complete the appropriate forms.

5. The number of annual respondents:

NRC Form 540: 2,500 licensees

NRC Form 541: 2,500 licensees

NRC Form 542: 22 licensees

6. The number of hours needed annually to complete the requirement or request:

NRC Form 540: 2,238 (0.167 hours per response)

NRC Form 541: 19,779 (1.48 hours per response)

NRC Form 542: 126 (0.167 hours per response)

7. *Abstract:* NRC Forms 540, 541, and 542, together with their continuation pages, designated by the ''A'' suffix, provide a set of standardized forms to meet Department of Transportation (DOT), NRC, and State requirements. The forms were developed by NRC at the request of low-level waste industry groups. The forms provide uniformity and efficiency in the collection of information contained in manifests which are required to control transfers of low-level radioactive waste intended for disposal at a land disposal facility. NRC Form 540 contains information needed to satisfy DOT shipping paper requirements in 49 CFR Part 172 and the waste tracking requirements of NRC in 10 CFR Part 20. NRC Form 541 contains information needed by disposal site facilities to safely dispose of low-level waste and information to meet NRC and State requirements regulating these activities. NRC Form 542, completed by waste collections or processors, contains information which facilitates tracking the identity of the waste generator. That tracking becomes more complicated when the waste forms, dimensions, or packagings are changed by the waste processor. Each container of waste shipped from a waste processor may contain waste from several different generators. The information provided on NRC Form 542 permits the States and Compacts to know the original generators of low-level waste, as authorized by the Low-Level Radioactive Waste Policy Amendments Act of 1985, so they can ensure that waste is disposed of in the appropriate Compact.

Submit, by February 13, 2000, comments that address the following questions:

1. Is the proposed collection of information necessary for the NRC to properly perform its functions? Does the information have practical utility?

2. Is the burden estimate accurate?

3. Is there a way to enhance the quality, utility, and clarity of the information to be collected?

4. How can the burden of the information collection be minimized, including the use of automated collection techniques or other forms of information technology?

A copy of the draft supporting statement may be viewed free of charge at the NRC Public Document Room, One White Flint North, 11555 Rockville Pike, Rockville, MD 20852. OMB clearance requests are available at the NRC worldwide web site: (http://www.nrc.gov/NRC/PUBLIC/OMB/index.html). The document will be available on the NRC home page site for 60 days after the signature date of this notice.

Comments and questions about the information collection requirements may be directed to the NRC Clearance Officer, Brenda Jo Shelton, U.S. Nuclear Regulatory Commission, T–6 E 6, Washington, DC 20555–0001, by telephone at (301) 415–7233, or by Internet electronic mail at BJSI@NRC.GOV.

Dated at Rockville, Maryland, this 11th day of December, 2000.

For the Nuclear Regulatory Commission.

**Brenda Jo Shelton,**

*NRC Clearance Officer, Office of the Chief Information Officer.*

[FR Doc. 00–31967 Filed 12–14–00; 8:45 am]

BILLING CODE 7590–01–M

## OFFICE OF MANAGEMENT AND BUDGET

### Preparing and Auditing Direct Loan and Loan Guarantee Subsidies Under the Federal Credit Reform Act

**AGENCY:** Office of Management and Budget.

**ACTION:** Notice of document availability.

**SUMMARY:** This Notice indicates the availability of the third Financial Accounting and Auditing Technical Release, ''Preparing and Auditing Direct Loan and Loan Guarantee Subsidies under the Federal Credit Reform Act.'' The Federal Accounting Standards Advisory Board cleared the technical release on July 31, 1999. Technical Release No. 3 is available on Financenet at *http://www.financenet.gov/financenet/fed/aapc/technicl.htm*.

**ADDRESSES:** Copies of Technical Release No. 3 may be obtained free of charge from the Federal Accounting Standards Advisory Board, 441 G Street NW, Mailstop 6K17V, Washington, DC 20548 (telephone 202–512–7350).

**FOR FURTHER INFORMATION CONTACT:** David Zavada (telephone: 202–395–3993), Office of Federal Financial Management, Office of Management and Budget, 725 17th Street, N.W., Room 6025, Washington, DC 20503.

**Joshua Gotbaum,**

*Executive Associate Director and Controller.*

[FR Doc. 00–32008 Filed 12–14–00; 8:45 am]

BILLING CODE 3110–01–U

## OFFICE OF MANAGEMENT AND BUDGET

### Reporting on Non-Valued Seized and Forfeited Property

**AGENCY:** Office of Management and Budget.

**ACTION:** Notice of document availability.

**SUMMARY:** This Notice indicates the availability of the fourth Financial Accounting and Auditing Technical Release, ''Reporting on Non-Valued Seized and Forfeited Property.'' The Federal Accounting Standards Advisory Board cleared the technical release on July 31, 1999. Technical Release No. 4 is available on Financenet at *http://www.financenet.gov/financenet/fed/aapc/technicl.htm.*

**ADDRESSES:** Copies of Technical Release No. 4 may be obtained free of charge from the Federal Accounting Standards Advisory Board, 441 G Street, NW, Mailstop 6K17V, Washington, DC 20548 (telephone 202–512–7350).

**FOR FURTHER INFORMATION CONTACT:** David Zavada (telephone: 202–395–3993), Office of Federal Financial Management, Office of Management and Budget, 725 17th Street, NW, Room 6025, Washington, DC 20503.

**Joshua Gotbaum,**

*Executive Associate Director and Controller.*

[FR Doc. 00–32009 Filed 12–14–00; 8:45 am]

BILLING CODE 3110–01–U

## PENSION BENEFIT GUARANTY CORPORATION

### Interest Assumption for Determining Variable-Rate Premium; Interest Assumptions for Multiemployer Plan Valuations Following Mass Withdrawal

**AGENCY:** Pension Benefit Guaranty Corporation.

**ACTION:** Notice of interest rates and assumptions.

**SUMMARY:** This notice informs the public of the interest rates and assumptions to be used under certain Pension Benefit Guaranty Corporation regulations. These

rates and assumptions are published elsewhere (or are derivable from rates published elsewhere), but are collected and published in this notice for the convenience of the public. Interest rates are also published on the PBGC's web site (http://www.pbgc.gov).

**DATES:** The interest rate for determining the variable-rate premium under part 4006 applies to premium payment years beginning in December 2000. The interest assumptions for performing multiemployer plan valuations following mass withdrawal under part 4281 apply to valuation dates occurring in January 2001.

**FOR FURTHER INFORMATION CONTACT:** Harold J. Ashner, Assistant General Counsel, Office of the General Counsel, Pension Benefit Guaranty Corporation, 1200 K Street, NW., Washington, DC 20005, 202–326–4024. (For TTY/TDD users, call the Federal relay service toll-free at 1–800–877–8339 and ask to be connected to 202–326–4024.)

**SUPPLEMENTARY INFORMATION:**

### Variable-Rate Premiums

Section 4006(a)(3)(E)(iii)(II) of the Employee Retirement Income Security Act of 1974 (ERISA) and § 4006.4(b)(1) of the PBGC's regulation on Premium Rates (29 CFR part 4006) prescribe use of an assumed interest rate in determining a single-employer plan's variable-rate premium. The rate is the ''applicable percentage'' (currently 85 percent) of the annual yield on 30-year Treasury securities for the month preceding the beginning of the plan year for which premiums are being paid (the ''premium payment year''). The yield figure is reported in Federal Reserve Statistical Releases G.13 and H.15.

The assumed interest rate to be used in determining variable-rate premiums for premium payment years beginning in December 2000 is 4.91 percent (*i.e.,* 85 percent of the 5.78 percent yield figure for November 2000).

The following table lists the assumed interest rates to be used in determining variable-rate premiums for premium payment years beginning between January 2000 and December 2000.

| For premium payment years beginning in: | The assumed interest rate is: |
|---|---|
| January 2000 | 5.40 |
| February 2000 | 5.64 |
| March 2000 | 5.30 |
| April 2000 | 5.14 |
| May 2000 | 4.97 |
| June 2000 | 5.23 |
| July 2000 | 5.04 |
| August 2000 | 4.97 |
| September 2000 | 4.86 |
| October 2000 | 4.96 |
| November 2000 | 4.93 |
| December 2000 | 4.91 |

### Multiemployer Plan Valuations Following Mass Withdrawal

The PBGC's regulation on Duties of Plan Sponsor Following Mass Withdrawal (29 CFR part 4281) prescribes the use of interest assumptions under the PBGC's regulation on Allocation of Assets in Single-employer Plans (29 CFR part 4044). The interest assumptions applicable to valuation dates in January 2001 under part 4044 are contained in an amendment to part 4044 published elsewhere in today's **Federal Register**. Tables showing the assumptions applicable to prior periods are codified in appendix B to 29 CFR part 4044.

Issued in Washington, DC, on this day of December 2000.

**David M. Strauss,**

*Executive Director, Pension Benefit Guaranty Corporation.*

[FR Doc. 00–31991 Filed 12–14–00; 8:45 am]

BILLING CODE 7708–01–P

## SECURITIES AND EXCHANGE COMMISSION

### Issuer Delisting; Notice of Application to Withdraw from Listing and Registration; (Ramco Energy plc, American Depositary Shares (Representing Ordinary Shares, Nominal Value 10p Per Share) File No. 1–14582

December 11, 2000.

Ramco Energy plc, a company organized under the laws of Scotland (''Company''), has filed an application with the Securities and Exchange Commission (''Commission''), pursuant to Section 12(d) of the Securities Exchange Act of 1934 (''Act'')[1] and Rule 12d2–2(d) thereunder,[2] to withdraw its American Depositary Shares (representing Ordinary Shares, nominal value 10p per share) (''Security''), from listing and registration on the American Stock Exchange (''Amex'').

While the Company's Security is listed and registered in the United States on the Amex, the Company's related Ordinary Shares are listed in England on the Alternative Investment Market of the London Stock Exchange. The Company has stated that the trading volume for its Security on the Amex is very limited. In order to avoid the direct and indirect costs of maintaining the Amex listing, therefore, the Company's board of directors unanimously approved a resolution on November 21, 2000, authorizing the Security's withdrawal from listing and registration on the Amex.

The Company has stated in its application that it has complied with the rules of the Amex governing the voluntary withdrawal of a security from listing and registration. In addition, the Company has stated that its application relates solely to the listing and registration of its Security on the Amex and shall have no effect on the continued listing of its related Ordinary Shares on the Alternative Investment Market of the London Stock Exchange.

Any interested person may, on or before January 3, 2001, submit by letter to the Secretary of the Securities and Exchange Commission, 450 Fifth Street, N.W., Washington, D.C. 20549–0609, facts bearing upon whether the application has been made in accordance with the rules of the Amex and what terms, if any, should be imposed by the Commission for the protection of investors. The Commission, based on the information submitted to it, will issue an order granting the application after the date mentioned above, unless the Commission determines to order a hearing on the matter.

For the Commission, by the Division of Market Regulation, pursuant to delegated authority.[3]

**Jonathan G. Katz,**

*Secretary.*

[FR Doc. 00–31992 Filed 12–14–00; 8:45 am]

BILLING CODE 8010–01–M

## SECURITIES AND EXCHANGE COMMISSION

### Issuer Delisting; Notice of Application To Withdraw From Listing and Registration; (Resource Bankshares Corporation, Common Stock, $1.50 Par Value) File No. 1–14319

December 11, 2000.

Resource Bankshares Corporation, a Virginia corporation (''Company''), has filed an application with the Securities and Exchange Commission (''Commission''), pursuant to Section 12(d) of the Securities Exchange Act of

[1] 15 U.S.C. 78*l*(d).

[2] 17 CFR 240.12d2–2(d).

[3] 17 CFR 200.30–3(a)(1).

1934 (''Act'')[1] and Rule 12d2–2(d) thereunder,[2] to withdraw its Common Stock, $1.50 par value (''Security''), from listing and registration on the American Stock Exchange LLC (''Amex'').

Counsel for the Company has stated that the Security has been approved for quotation on the National Market of the Nasdaq Stock Market, Inc. (''Nasdaq National Market''), effective at the opening of business on Friday, December 15, 2000.[3] The Amex will suspend trading in the Security on December 15, 2000, in conjunction with its being designated for quotation on the Nasdaq National Market. The Company made the decision to transfer its Security having determined that its long range plans for growth and investment will be better served by the dealer market of the Nasdaq National Market than by the auction market of the Amex.

The Company's application relates solely to the withdrawal of the Security from listing on the Amex and registration under Section 12(b) of the Act[4] and shall have no effect upon the Security's continued obligation to be registered under Section 12(g) of the Act.[5]

Any interested person may, on or before January 3, 2001, submit by letter to the Secretary of the Securities and Exchange Commission, 450 Fifth Street, NW., Washington, DC 20549–0609, facts bearing upon whether the application has been made in accordance with the rules of the Amex and what terms, if any, should be imposed by the Commission for the protection of investors. The Commission, based on the information submitted to it, will issue an order granting the application after the date mentioned above, unless the Commission determines to order a hearing on the matter.

For the Commission, by the Division of Market Regulation, pursuant to delegated authority.[6]

**Jonathan G. Katz,**

*Secretary.*

[FR Doc. 00–31993 Filed 12–14–00; 8:45 am]

**BILLING CODE 8010–01–M**

[1] 15 U.S.C. 78*l*(d).

[2] 17 CFR 240.12d2–2(d).

[3] Telephone conversation between T. Richard Litton Jr., Member, Kaufman & Canoles, and Matthew Boesch, Paralegal, Division of Market Regulation, Commission, on December 8, 2000.

[4] 15 U.S.C. 78*l*(b).

[5] 15 U.S.C. 78*l*(g).

[6] 17 CFR 200.30–3(a)(1).

## SECURITIES AND EXCHANGE COMMISSION

### Sunshine Act Meeting

**FEDERAL REGISTER CITATION OF PREVIOUS ANNOUNCEMENT:**

[65 FR 77054, December 8, 2000]

**STATUS:** Closed meeting.

**PLACE:** 450 Fifth Street, N.W., Washington, D.C.

**DATE PREVIOUSLY ANNOUNCED:** December 6, 2000.

**CHANGE IN THE MEETING:** Time change.

The closed meeting scheduled for Thursday, December 14, 2000 at 11:00 a.m., has been changed to Thursday, December 14, 2000, at 11:30 a.m.

At times, changes in Commission priorities require alterations in the scheduling of meeting items. For further information and to ascertain what, if any, matters have been added, deleted or postponed, please contact:

The Office of the Secretary at (202) 942–7070.

Dated: December 12, 2000.

**Jonathan G. Katz,**

*Secretary.*

[FR Doc. 00–32070 Filed 12–12–00; 4:49 pm]

**BILLING CODE 8010–01–M**

## SECURITIES AND EXCHANGE COMMISSION

**[Release No. 34–43697; File No. SR–OPRA–00–08]**

## Options Price Reporting Authority; Order Approving an Amendment to the Options Price Reporting Authority Plan to Establish Standards for Determining a Participation Fee

December 8, 2000.

**I.** *Introduction*

On September 12, 2000, the Options Price Reporting Authority (''OPRA'') submitted to the Securities and Exchange Commission (''SEC'' of ''Commission''), pursuant to Rule 11Aa3–2 under the Securities Exchange Act of 1934 (''Act''),[1] an amendment to the OPRA Plan for Reporting of Consolidated Options Last Sale Reports and Quotation Information (''OPRA Plan'').[2] The proposed OPRA Plan amendment would incorporate in the OPRA Plan factors to be considered by OPRA in determining the amount of the participation fee described in the current OPRA Plan as payable by each new party to the OPRA Plan. Notice of the proposed OPRA Plan amendment was published in the **Federal Register** on October 3, 2000.[3] the Commission received one comment letter on the proposed OPRA Plan amendment.[4] This order approves the proposal.

**II.** *Description and Purpose of the Amendment*

The OPRA Plan currently provides that any national securities exchange or registered securities association whose rules governing the trading of standardized options have been approved by the Commission may become a party to the OPRA Plan, provided it agrees to conform to the terms and conditions of the OPRA Plan and pays a participation fee to OPRA The OPRA Plan does not establish the amount of the participation fee, but instead, states that the amount of the fee will be determined by OPRA in connection with each new application for participation, based upon standards incorporated in the OPRA Plan.[5] OPRA believes that this approach provides sufficient flexibility to permit the determination of the fee to take into account the unique circumstances of each new application while, at the same time assuring that the amount of the fee is based upon a set of established standards, thus enabling the fee to be administered in a fair and consistent manner. Under this structure, the amount of the participation fee will be determined in discussions with each applicant in light of the standards embodied in the OPRA Plan, under the general oversight of the Commission. OPRA represents that this is the same general approach that is reflected in the plans of other registered securities information processor, such as the Consolidated Tape Association and the Consolidated Quotation System.[6]

[1] 17 CFR 240.11Aa3–2.

[2] OPRA is a National Market System Plan approved by the Commission pursuant to Section 11A of the Act and Rule 11Aa3–2 thereunder. *See* Securities Exchange Act Release No. 17638 (March 18, 1981). The OPRA Plan provides for the collection and dissemination of last sale and quotation information on options that are traded on the participant exchanges. The six exchanges that are participants to the OPRA Plan are the American Stock Exchange LLC, the Chicago Board Options Exchange, Inc., the International Securities Exchange LLC, the New York Stock Exchange, Inc., the Pacific Exchange, Inc., and the Philadelphia Stock Exchange, Inc.

[3] *See* Securities Exchange Act Release No. 43347 (September 26, 2000), 65 FR 59035.

[4] *See* letter from Gerald D. Putnum, Chief Executive Officer, Archipelago, L.L.C., to Jonathan G. Katz, Secretary, Commission, dated October 20, 2000 (''Archipelago Letter'').

[5] *See* Securities Exchange Act Release No. 42817 (May 24, 2000), 65 FR 35149 (June 1, 2000) (File No. SR–OPRA–99–01).

[6] *See* Section III(c) of the Second Restatement of the CTA Plan as restated December 1995, and Section III(c) of the Restatement of the CQ Plan as restated December 1995.

Although the OPRA Plan currently provides for a participation fee to be determined in the manner described above, it does not reflect the specific standards to be applied in determining the amount of the fee. Instead, the OPRA Plan contemplates that these standards will be incorporated in the OPRA Plan by means of an amendment to be filed with and approved by the Commission prior to the determination of the participation fee to be paid by the International Securities Exchange, LLC (''ISE''), which, at present, is the only party to the OPRA Plan to which a fee based upon these standards will apply. OPRA proposes to amend the OPRA Plan for the purpose of incorporating in the OPRA Plan standards for determining a participation fee to be paid by a new participant to the OPRA Plan. OPRA represents that ISE, the only party currently subject to a participation fee to be determined on the basis of the standards now proposed, did not vote on the adoption of these standards, but did participate in the discussion of the proposed standards.

The purpose of the participation fee is to require each new party to the OPRA Plan to pay a fair share of the costs previously paid by the other parties for the development, expansion, and maintenance of the OPRA system. Consistent with the purpose, the standards now proposed to be embodied in the OPRA Plan for the determination of the participation fee are, for the most part, concerned with these categories of costs. Because OPRA, as an administrative committee of exchanges, does not account for any assets of its own, it does not capitalize any of its costs but instead, simply passes them on to the exchanges. However, OPRA believes that the concept of capitalized costs is an appropriate factor to be taken into account in determining what should be a proper participation fee. Accordingly, the first factor proposed to be included in the OPRA Plan for this purpose is to consider what would have been amortized as OPRA's capital expenditures over the past five years if OPRA were subject to generally accepted accounting principles. OPRA believes that five years is an appropriate time frame for this purpose not only because it represents a reasonable life for the kinds of computer hardware and software assets that make up the OPRA system, but also, because it is a short enough period to provide a reasonable basis for determining how much of OPRA's past expenses should be shared by a new party.

The next factor proposed to be considered is an assessment of costs incurred and to be incurred by OPRA in connection with any modifications to the OPRA system necessary to accommodate the new party, unless these costs have otherwise been paid or reimbursed by the new party. This, too, is a cost-based factor, and reflects OPRA's belief that it is appropriate for a new party to pay the costs uniquely associated with its becoming a party.

Finally, OPRA proposes that the determination of the participation fee would also take into account previous fees paid by other new parties. OPRA represents that the closer in time any such prior fees were paid and the greater the similarity of the circumstances between the participation of the other parties and the party that is to pay the participation fee under consideration, the greater will be the weight given to this factor, in the interest of fairness and consistency. Further, OPRA represents that ISE and the other OPRA participant exchanges have had discussions concerning what would be the amount of the fee if the standard proposed in this amendment were approved, and they have reached agreement on both the amount of the fee and the terms of payment.

## III. Discussion

The Commission received one comment letter regarding the proposed OPRA Plan amendment.[7] The commenter expressed support for the proposed amendment to the OPRA Plan. Specifically, the commenter stated that the proposed standards for determining participation fees would treat new participants to the OPRA Plan in an equitable fashion.

After careful review, the Commission finds that the proposed OPRA Plan amendment is consistent with the requirements of the Act and the rules and regulations thereunder.[8] Specifically, the Commission believes that the proposed OPRA Plan amendment is consistent with Section 11A of the Act[9] and Rule 11Aa3–2[10] thereunder in that it is appropriate in the public interest, for the protection of investors and the maintenance of fair and orderly markets, to remove impediments to, and perfect the mechanisms of, a national market system.

The Commission believes that it is reasonable for the OPRA Plan to provide for an initial participation fee to be paid by new parties to the OPRA Plan. The Commission notes that the proposal would establish specific factors for determining the amount of the fee payable by new participants to the OPRA Plan. The Commission believes that the proposed factors should foster a fair and reasonable method of determining the amount of a fee payable by new participants to the OPRA Plan.[11] Accordingly, the Commission finds that the proposed factors for determining the amount of the participation fee in the proposal are consistent with the Act.

## IV. Conclusion

*It is therefore ordered,* pursuant to Rule 11Aa3–2 of the Act,[12] that the proposed OPRA Plan amendment, (SR–OPRA–00–08) is approved.

For the Commission, by the Division of Market Regulation, pursuant to delegated authority.[13]

**Margaret H. McFarland,**

*Deputy Secretary.*

[FR Doc. 00–31997 Filed 12–14–00; 8:45 am]

BILLING CODE 8010–01–M

[7] *See* Archipelago Letter, *supra* note 4.

[8] In approving this proposed OPRA Plan amendment, the Commission has considered its impact on efficiency, competition, and capital formation. 15 U.S.C. 78c(f).

[9] 15 U.S.C. 78k–1.

[10] 17 CFR 240.11A3–2.

[11] The Commission notes that the amount of the participation fee for a new party to the OPRA Plan would be subject to review by the Commission if such new party and OPRA do not agree on the amount of the fee. *See* 15 U.S.C. 78k–1(b)(5).

[12] 17 CFR 240.11Aa3–2.

[13] 17 CFR 200.30(a)(29).

---

## SECURITIES AND EXCHANGE COMMISSION

**[Release No. 34–43648; File No. SR–DTC–00–11]**

## Self-Regulatory Organizations; The Depository Trust Company; Notice of Filing and Immediate Effectiveness of A Proposed Rule Change Relating to Service Fees

November 30, 2000.

Pursuant to Section 19(b)(1)[1] of the Securities Exchange Act of 1934 (''Act''), notice is hereby given that on August 4, 2000, The Depository Trust Company (''DTC'') filed with the Securities and Exchange Commission (''Commission'') the proposed rule change as described in Items I, II, and III below, which Items have been prepared by DTC. The Commission is publishing this notice to solicit comments on the proposed rule change from interested persons.

## I. Self-Regulatory Organization's Statement of the Terms of Substance of the Proposed Rule Change

The proposed rule change will change DTC's service fee schedule.

[1] 15 U.S.C. 78s(b)(1).

## II. Self-Regulatory Organization's Statement of the Purpose of, and Statutory Basis for, the Proposed Rule Change

In its filing with the Commission, DTC included statements concerning the purpose of and basis for the proposed rule change and discussed any comments that it received on the proposed rule change. The text of these statements may be examined at the places specified in Item IV below. DTC has prepared summaries, set forth in sections A, B, and C below, of the most significant aspects of such statements.[2]

*A. Self-Regulatory Organization's Statement of the Purpose of, and Statutory Basis for, the Proposed Rule Change*

DTC proposed to change its service fee schedule by adding the following Participant Terminal System (PTS) fees under the heading ''GWIZ Service.''[3] the proposed fees are designed to recover DTC's estimated service costs.

| Service | Present fee | Proposed fee |
|---|---|---|
| For Original Issuance services, which combines descriptive and most recent event information. | None | $.25 per inquiry. |
| For DTC Processing services, which includes four pages of CONI information. | None | $.020 per inquiry. |
| For Agent, Distribution, Redemption and Corporate Action Screens. | None | $.09 per inquiry. |

DTC believes that the proposed rule change is consistent with the requirements of Section 17A of the Act[4] and the rules and regulations thereunder because it promotes the prompt and accurate clearance and settlement of securities transactions while ensuring the safeguarding of funds and securities in DTC's possession or control.

*B. Self-Regulatory Organization's Statement on Burden on Competition*

DTC does not believe that the proposed rule change will impose any burden on competition that is not necessary or appropriate in furtherance of the purposes of the Act.

*C. Self-Regulatory Organization's Statement on Comments on the Proposed Rule Change ReceiveD From Members, Participants or Others*

No comments on the proposed rule change were solicited or received.

## III. Date of Effectiveness of the Proposed Rule Change and Timing for Commission Action

The proposed rule change has become effective pursuant to Section 19(b)(3)(A)(ii) of the Act[5] and Rule 19b–4(f)(2)[6] thereunder because the proposed rule change establishes or changes a due, fee, or other charge. At any time within sixty days of the filing of such proposed rule change, the Commission may summarily abrogate such rule change if it appears to the Commission that such action is necessary or appropriate in the public interest, for the protection of investors, or otherwise in furtherance of the purposes of the Act.

## IV. Solicitation of Comments

Interested persons are invited to submit written data, views, and arguments concerning the foregoing including whether the proposed rule change is consistent with the Act. Persons making written submissions should file six copies thereof with the Secretary, Securities and Exchange Commission, 450 Fifth Street, NW., Washington, DC 20549–0609. Copies of the submission, all subsequent amendments, all written statements with respect to the proposed rule change that are filed with the Commission, and all written communications relating to the proposed rule change between the Commission and any person, other than those that may be withheld from the public in accordance with the provisions of 5 U.S.C. 552, will be available for inspection and copying in the Commission's Public Reference Room, 450 Fifth Street, NW., Washington, DC. Copies of such filing also will be available for inspection and copying at DTC's principal office. All submissions should refer to File No. SR–DTC–00–11 and should be submitted by January 5, 2001.

For the Commission, by the Division of Market Regulation, pursuant to delegated authority.[7]

**Margaret H. McFarland,**

*Deputy Secretary.*

[FR Doc. 00–31998 Filed 12–14–00; 8:45 am]

BILLING CODE 8010–01–M

[2] The Commission has modified the text of the summaries prepared by DTC.

[3] GWIZ is a new PTS function that offers DTC's participants improved search and navigation capabilities and expanded information about eligible securities. The GWIZ service combines corporate data from five currently separate PTS functions into one application and provides access to more up-to-the-minute information (*e.g.*, corporate actions, dividends, and redemptions) with fewer keystrokes to the GWIZ user. In addition, GWIZ provides links to other PTS functions for more detailed or participant-specific information.

[4] 15 U.S.C. 78q–1.

[5] 15 U.S.C. 78s(b)(3)(A)(ii).

[6] 17 CFR 240.19b–4(f)(2).

[7] 17 CFR 200.30–3(a)(12).

---

## SECURITIES AND EXCHANGE COMMISSION

**[Release No. 34–43695; File No. SR–NASD–00–34]**

## Self-Regulatory Organizations; Order Approving Proposed Rule Change by the National Association of Securities Dealers, Inc., Relating to the Authority of the Director of Arbitration to Remove Arbitrators for Cause

December 8, 2000.

## I. Introduction

On June 13, 2000, the National Association of Securities Dealers, Inc. (''NASD''), through its wholly owned subsidiary, NASD Dispute Resolution, Inc. (''NASD Dispute Resolution''), filed with the Securities and Exchange Commission (''Commission'') a proposed rule change pursuant to Section 19(b)(1) of the Securities Exchange Act of 1934 (''Act'')[1] and Rule 19b–4 thereunder.[2] On July 28, 2000, NASD Dispute Resolution submitted Amendment No. 1 to the proposed rule change.[3] The proposed rule change

[1] 15 U.S.C. 78s(b)(1).

[2] 17 CFR 240.19b–4.

[3] *See* Letter from Jean I. Feeney, Special Advisor to the President, NASD Dispute Resolution, to Katherine A. England, Assistant Director, Division of Market Regulation, Commission, dated July 27, 2000. Amendment No. 1 clarified certain portions of the description of the proposed rule change and made technical amendments to the text of the proposed rule langauge.

amends NASD Rules 10308 and 10312 to provide authority to the Director of Arbitration (''Director'') to remove arbitrators for cause after hearings have begun. Notice of the proposed rule change was published for comment in the **Federal Register** on September 22, 2000.[4] The Commission received two comment letters regarding the proposal.[5] This order approves the proposed rule change.

## II. Description of the Proposed Rule Change

NASD Dispute Resolution proposes to amend NASD Rules 10308 and 10312, relating to arbitration, by permitting the disqualification or removal of arbitrators for cause after the first pre-hearing or hearing session begins, and by deleting current provisions to the contrary. Under the proposed amendments, disqualification or removal would only be permitted based on information that was required to be disclosed by the arbitrator pursuant to Rule 10312, and that was not known to the parties when the arbitrator was selected. The proposal further provides that only the Director or the President of NASD Dispute Resolution could so remove arbitrators. This authority could not be delegated.

In addition to the changes described above, NASD Dispute Resolution proposes to amend Rule 10312, its arbitrator disclosure rule, in several places. First, the word ''personally'' would be deleted from Rule 10312(a)(2), and the phrase ''or circumstances'' would be added to paragraphs (b) and (e). These changes are intended to broaden the categories of information to be disclosed by arbitrators, so that all such information, and not only information involving ''relationships'' (as stated in the current rule) is disclosed. Thus, the disclosure of any existing or past financial, business, professional, family, social, or other relationships or circumstances that are likely to affect impartiality, or that might reasonably create an appearance of partiality or bias, should be disclosed. Second, NASD Dispute Resolution proposes to amend Rule 10312 to clarify that the Director may entertain for-cause challenges based on sources of information other than the arbitrator. Finally, Rule 10312(f) would be deleted as unnecessary in light of the preceding changes.

## III. Summary of Comments

The Commission received two letters regarding the proposed rule change. The National Futures Association (''NFA'') supported the proposal, noting that it employed similar procedures in administering its arbitration program. NFA asserted that the proposal would be efficient, would ensure the integrity of arbitration proceedings, and would resolve conflicts without requiring the parties to seek judicial intervention.[6] A second letter from a practitioner in securities arbitration opposed the proposed rule change. The commenter stated that the authority to remove for cause presents conflicts of interest, and that determinations of bias should be resolved by the courts.[7]

## IV. Discussion

After careful review, the Commission finds that the proposed rule change is consistent with the Act and the rules and regulations thereunder applicable to a national securities association.[8] The Commission finds that the proposal is consistent with the requirements of Section 15A(b)(6) of the Act,[9] which requires that the rules of a registered national securities association be designed to prevent fraudulent and manipulative acts and practices, to promote just and equitable principles of trade and, in general, to protect investors and the public interest.

The proposed rule change will permit the Director or the President of NASD Dispute Resolution to remove an arbitrator at any juncture, based on information not known to the parties at the time of the arbitrator's appointment and that should have been disclosed by the arbitrator pursuant to Rule 10312. The Commission notes that NASD Dispute Resolution's current rules do not allow for removal of an arbitrator with a subsequently discovered conflict of interest. In this situation, parties may be forced to resort to judicial intervention to address these conflicts. This creates litigation expenses, diminishes confidence in the arbitration system, and undermines the purpose of arbitration.

The Commission believes that these amendments to NASD Rules 10308 and 10312 should provide for the protection of, and will benefit, users of the arbitration program. The Commission notes that the Director already has the authority to remove arbitrators for cause before the first hearing or pre-hearing conference. This proposal extends that authority beyond the first hearing or pre-hearing conference. The new provisions should result in lower litigation expenses for parties, because they will be able to request the Director to remove an arbitrator, rather than be required to seek judicial intervention. The Commission further believes that the proposal will help ensure greater confidence in the fairness and neutrality of the administration of arbitration proceedings. Further, the Commission believes the proposed revisions will help protect investors' interests by allowing the Director the flexibility to remove arbitrators for cause at any time during an arbitration proceeding, based on information that should have been disclosed by the arbitrator, regardless of the source of that information. This authority is consistent with that provided for in the rules of other arbitration programs.[10] Finally, the proposed revisions should facilitate speedy resolution of potential conflicts of interest.

The Commission also believes that the proposed rule changes will benefit investors by providing for broader disclosure by arbitrators. The rule change will clarify that arbitrators are required to disclose not only personal relationships, but also any circumstances that are likely to affect their actual or perceived impartiality. This additional information should assist parties in arbitration in their efforts to select neutral and fair arbitrators. It should also increase confidence in the neutrality and objectivity of the arbitration process.

## V. Conclusion

For the foregoing reasons, the Commission finds that the proposed rule change is consistent with the requirements of the Act, and the rules and regulations thereunder.

*It Is Therefore Ordered,* pursuant to Section 19(b)(2) of the Act,[11] that the proposed rule change (SR–NASD–00–34) is approved.

For the Commission, by the Division of Market Regulation, pursuant to delegated authority.[12]

**Margaret H. McFarland,**

*Deputy Secretary.*

[FR Doc. 00–31959 Filed 12–14–00; 8:45 am]

BILLING CODE 8010–01–M

[4] *See* Securities Exchange Act Release No. 34–43291 (September 14, 2000), 65 FR 59036 (September 22, 2000) (''Notice'')

[5] *See* letters to the Secretary, Securities and Exchange Commission, from Jonathan Kord Lagemann, dated October 6, 2000 the Authority of the Director of Arbitration to Remove Arbitrators for Cause (''Lagemann letter''), and letter from Cynthia A. Cain, Director of Arbitration, National Futures Association (''NFA letter''), dated October 12, 2000.

[6] *See* NFA Letter.

[7] *See* Lagemann Letter.

[8] In approving the proposal, the Commission has considered the rule's impact on efficiency, competition, and capital formation. 15 U.S.C. 78c(f).

[9] 15 U.S.C. 78o(b)(6).

[10] *See* Notice, 65 FR 57413, 57415, notes 8, 10 and 11 (citing the rules of other arbitration programs).

[11] 15 U.S.C. 78s(b)(2).

[12] 17 CFR 200.30–3(a)(12).

## SECURITIES AND EXCHANGE COMMISSION

**[Release No. 34–43694; File No. SR–NYSE–00–56]**

## Self-Regulatory Organizations; Notice of Filing and Immediate Effectiveness of Proposed Rule Change by the New York Stock Exchange, Inc., Relating to the Adoption of Transaction Fees

December 8, 2000.

Pursuant to Section 19(b)(1) of the Securities Exchange Act of 1934 (''Act'')[1] and Rule 19b–4 thereunder,[2] notice is hereby given that on December 7, 2000, the New York Stock Exchange, Inc. (''NYSE'' or ''Exchange'') filed with the Securities and Exchange Commission (''SEC'' or ''Commission'') the proposed rule change as described in Items I, II, and III below, which Items have been prepared by the Exchange. The Commission is publishing this notice to solicit comments on the proposed rule change from interested persons.

### I. Self-Regulatory Organization's Statement of the Terms of Substance of the Proposed Rule Change

The Exchange proposes to adopt a specific transaction fee schedule to apply to investment company units listed under Section 703.16 of the Exchange's Listed Company Manual. The text of the proposed rule change is available upon request from the Office of the Secretary, the NYSE or the Commission.

### II. Self-Regulatory Organization's Statement of the Purpose of, and Statutory Basis for, the Proposed Rule Change

In its filing with the Commission, the Exchange included statements concerning the purpose of and basis for the proposed rule change and discussed any comments it received on the proposed rule change. The text of these statements may be examined at the places specified in Item IV below. The Exchange has prepared summaries, set forth in sections A, B, and C below, of the most significant aspects of such statements.

*A. Self-Regulatory Organization's Statement of the Purpose of, and Statutory Basis for, the Proposed Rule Change*

1. Purpose

The Exchange anticipants that it will shortly list investment company units (more generally known as an exchange traded fund or ETF) based on the S&P Global 100 Index. The Exchange expects to list additional ETFs thereafter. Given that it is the practice in the industry to charge relatively nominal listing fees for ETFs, it is important for the Exchange to realize revenue from transaction fees on ETFs to support its entry into this market. Accordingly, the Exchange will impose a specific transaction fee schedule on ETFs, as follows:

On-Floor proprietary transactions (specialist and other)—$0.63 per 100 shares, capped at $300 per trade.

Off-Floor transactions (customer and broker/dealer)—$0.60 per 100 shares, capped at $100 per trade.

In addition, it should be noted that the Exchange's transaction charge exemption for system orders, currently covering orders up to 2,099 shares, will be extended to orders up to 5,099 shares in ETFs.

The NYSE Constitution provides that transaction fees on stocks and bonds will not exceed 2% of a member firm's commissions.[3] ETFs are a unique form of derivative security and therefore not subject to this Constitutional limitation. This is consistent with treatment afforded to standardized options when they were listed on the Exchange, and to other unique products such as the Exchange Stock Portfolios, a basket trading mechanism offered approximately a decade ago.

2. Statutory Basis

The Exchange believes the proposed rule change is consistent with Section 6(b) of the Act[4] in general, and furthers the objectives of Section 6(b)(4) of the Act[5] in particular, in that it provides for the equitable allocation of reasonable dues, fees, and other charges among its members and issuers and other persons using its facilities.

*B. Self-Regulatory Organization's Statement on Burden on Competition*

The Exchange believes that the proposed fee change will not impose any burden on competition that is not necessary or appropriate in the furtherance of the purposes of the Act.

*C. Self-Regulatory Organization's Statement on Comments on the Proposed Rule Change Received From Members, Participants or Others*

The Exchange has not solicited, and does not intend to solicit, comments regarding the proposed rule change. The Exchange has not received any unsolicited written comments from members of other interested parties.

### III. Date of Effectiveness of the Proposed Rule Change and Timing for Commission Action

The foregoing rule change establishes or changes a due, fee, or other charge imposed by the Exchange and, therefore, has become effective pursuant to Section 19(b)(3)(A)(ii) of the Act[6] and Rule 19b–4(e) thereunder.[7] At any time within 60 days of the filing of the proposed rule change, the Commission may summarily abrogate such rule change if it appears to the Commission that such action is necessary or appropriate in the public interest, for the protection of investors, or otherwise in furtherance of the purpose of the Act.

### IV. Solicitation of Comments

Interested persons are invited to submit written data, views and arguments concerning the foregoing, including whether the proposed rule change is consistent with the Act. Persons making written submissions should file six copies thereof with the Secretary, Securities and Exchange Commission, 450 Fifth Street, NW, Washington, DC 20549–0609. Copies of the submission, all subsequent amendments, all written statements with respect to the proposed rule change that are filed with the Commission, and all written communications relating to the proposed rule change between the Commission and any person, other than those that may be withheld from the public in accordance with the provisions of 5 U.S.C. 552, will be available for inspection and copying in the Commission's Public Reference Room. Copies of such filing will also be available for inspection and copying at the principal office of the NYSE. All submissions should refer to File No. SR–NYSE–00–56 and should be submitted by January 5, 2001.

[1] 15 U.S.C. 78s(b)(1).

[2] 17 CFR 240.19b–4.

[3] The NYSE reconfirmed its Board's discretion under Article X, Section 4 of the NYSE Constitution to impose transaction fees on its members. Telephone conversation between James Duffy, Senior Vice President and Deputy General Counsel, NYSE, and Deborah Flynn, Senior Special Counsel, Division of Market Regulation, Commission, December 7, 2000.

[4] 15 U.S.C. 78f(b).

[5] 15 U.S.C. 78f(b)(4).

[6] 15 U.S.C. 78s(b)(3)(A)(ii).

[7] 17 CFR 240.19b–4(e).

For the Commission by the Division of Market Regulation, pursuant to delegated authority.[8]

**Margaret H. McFarland,**

*Deputy Secretary.*

[FR Doc. 00–31996 Filed 12–14–00; 8:45 am]

BILLING CODE 8010–01–M

## SECURITIES AND EXCHANGE COMMISSION

**[Release No. 34–43690; File No. SR–Phlx–00–90]**

## Self-Regulatory Organizations; Notice of Filing and Order Granting Accelerated Approval of Proposed Rule Change by the Philadelphia Stock Exchange, Inc. Relating to the Listing and Trading of Basket Linked Notes

December 7, 2000.

Pursuant to Section 19(b)(1) of the Securities Exchange Act of 1934 (''Act''),[1] and Rule 19b–4 thereunder,[2] notice is hereby given that on October 16, 2000, the Philadelphia Stock Exchange, Inc. (''Phlx'' or ''Exchange'') filed with the Securities and Exchange Commission (''Commission'') the proposed rule change as described in Items I and II below, which Items have been prepared by the Exchange. On November 27, 2000, Phlx filed Amendment No. 1 to the proposed rule change.[3] The Commission is publishing this notice to solicit comments on the proposed rule change and Amendment No. 1 from interested persons, and to grant accelerated approval to the proposed rule change, as amended.

### I. Self-Regulatory Organization's Statement of the Terms of Substance of the Proposed Rule Change

The Phlx proposes to amend its rules to permit the listing and trading, or the trading pursuant to unlisted trading privileges, of Basket Linked Notes (''BLNs''), hybrid instruments whose values are linked to the performance of two or more highly capitalized, actively traded equity securities. New Section (k) of Rule 803 would provide listing standards for BLNs. Below is the text of the proposed rule change. Proposed new language is *italicized.*

* * * * *

**Philadelphia Stock Exchange, Inc.**
**Criteria for Listing—Tier 1**

Rule 803. Unchanged.

(a)–(j) Unchanged.

*(k) Basket Linked Notes (''BLNs'').*

*Income instruments which are linked, in whole or in part, to the market performance of more than one common stock or non-convertible preferred stock will be considered for listing provided:*

(1) *Both the issue and the issuer of such security meet the criteria established in Rule 803(f) and the issue has a minimum term of one year.*

(2) *The issuer of such security will be expected to have a minimum tangible net worth in excess of $250,000,000, and to otherwise substantially exceed the earnings requirement set forth in Rule 803(a). In the alternative, the issuer will be expected: (i) to have a minimum tangible net worth of $150,000,000 and to otherwise substantially exceed the earnings requirements set forth in Rule 803(a), and (ii) not to have issued such securities where the original issue price of all the issuer's other equity and basket linked note offerings (combined with equity and basket linked note offerings of the issuer's affiliates) listed on a national securities exchange or traded through the facilities of Nasdaq exceeds 25% of the issuer's net worth.*

(3) *Each underlying linked stock either: (i) has a minimum market capitalization of $3 billion and during the 12 months preceding listing is shown to have traded at least 2.5 million shares, (ii) has a minimum market capitalization of $1.5 billion and during the 12 months preceding listing is shown to have traded at least 10 million shares; or (iii) has a minimum market capitalization of $500 million and during the 12 months preceding listing is shown to have traded at least 15 million shares.*

(4) *Each issuer of an underlying stock to which the instrument is to be linked shall be a 1934 Act reporting company which is listed on a national securities exchange or is traded through the facilities of a national securities system and is subject to last sale reporting. In addition, if any underlying security to which the instrument is to be linked is the stock of a non-U.S. company which is traded in the U.S. market as sponsored American Depository Shares (''ADS''), ordinary shares or otherwise, then for each such security the Exchange shall either: (i) have in place a comprehensive surveillance sharing agreement with the primary exchange on which each non-U.S. security is traded, (in the case of an ADS, the primary exchange on which the security underlying the ADS is traded); or (ii) the combined trading volume of each non-U.S. security and other related non-U.S. securities occurring in the U.S. market or in markets with which the Exchange has in place a comprehensive surveillance sharing agreement represents (on a share equivalent basis for any ADS) at least 50% of the combined worldwide trading volume in each non-U.S. security, other related non-U.S. securities, and other classes of common stock related to each non-U.S. security over the six month period preceding the date of listing; or (iii)(a) the combined trading volume of each non-U.S. security and other related non-U.S. securities occurring in the U.S. market represents (on a share equivalent basis) at least 20% of the combined world-wide trading volume in each non-U.S. security and in other related non-U.S. securities over the six month period preceding the date of selection of the non-U.S. security for a BLN listing, (b) the average daily trading volume for each non-U.S. security in the U.S. markets over the six months preceding the selection of each non-U.S. security for a BLN listing is 100,000 or more shares, and (c) the trading volume is at least 60,000 shares per day in the U.S. markets on a majority of the trading days for the six months preceding the date of selection of each non-U.S. security for a BLN listing.*

(5) *Each underlying linked stock to which the instrument relates may not exceed 5% of the total outstanding common shares of such entity, provided however, if any underlying linked stock is a non-U.S. security represented by ADSs, common shares, or otherwise, then for each such linked security the instrument may not exceed: (i) 2% of the total shares outstanding worldwide provided at least 20% of the worldwide trading volume in each non-U.S. security and related security during the six month period preceding the date of listing occurs in the U.S. market; (ii) 3% of the total worldwide shares outstanding provided at least 50% of the worldwide trading volume in each non-U.S. security and related non-U.S. security during the six month period preceding the date of listing occurs in the U.S. market; and (iii) 5% of the total shares outstanding worldwide provided at least 70% of the worldwide trading volume in each non-U.S. security and related non-U.S. security during the six month period preceding the date of listing occurs in the U.S. market. If any non-U.S. security and related securities has less than 20% of the worldwide trading volume occurring in the U.S. market during the six month period*

[8] 17 CFR 200.30–2(a)(12).

[1] 15 U.S.C. 78s(b)(1).

[2] 17 CFR 240.19b–4.

[3] In Amendment No. 1, Phlx amended the text and description of the proposed rule change to require a one-year minimum term for the securities described herein. *See* letter from Carla Behnfeldt, Director, New Product Development Group, Legal Department, Phlx, to Nancy Sanow, Assistant Director, Division of Market Regulation, Commission, dated November 21, 2000.

*preceding the date of listing, then the instrument may not be linked to that non-U.S. security. If an issuer proposes to list a BLN that relates to more than the allowable percentages set forth above, the Exchange, with the concurrence of the staff of the Division of Market Regulation of the Securities and Exchange Commission, will evaluate the maximum percentage of BLNs that may be issued on a case-by-case basis.*

(6) *BLNs will be treated as equity instruments.*

(7) *If any underlying security to which the instrument is to be linked is the stock of a non-U.S. company which is traded in the U.S. market as a sponsored ADS, ordinary shares or otherwise, then the minimum number of holders of such underlying linked security shall be 2,000.*

* * * * *

*II. Self-Regulatory Organization's Statement of the Purpose of, and Statutory Basis for, the Proposed Rule Change*

In its filing with the Commission, the Exchange included statements concerning the purpose of and basis for the proposed rule change and discussed any comments it received on the proposed rule change. The text of these statements may be examined at the places specified in Item III below. The Exchange has prepared summaries, set forth in sections A, B, and C below, of the most significant aspects of such statements.

*A. Self-Regulatory Organization's Statement of the Purpose of, and Statutory Basis for, the Proposed Rule Change*

1. Purpose

Exchange Rule 803(h) currently provides listing standards for equity linked notes (''ELNs''), hybrid instruments whose values are linked to the performance of a single highly capitalized, actively traded equity security. ELNs are non-convertible debt securities whose value is derived from the value of another issuer's common stock on non-convertible preferred stock.

The Exchange is now proposing to adopt Rule 803(k), separate listing standards for BLNs. BLNs are nonconvertible debt securities that are linked to more than one underlying equity security, each of which would be required to meet the listing standards set forth in the proposed rule. Proposed Rule 803(k) is substantially similar to American Stock Exchange (''Amex'') Rule 107B as it applies to ELNs which are linked to two or more securities.[4]

Proposed Rule 803(k) would permit the Exchange to consider for listing income instruments which are linked, in whole or in part, to the market performance of more than one common stock or non-convertible preferred stock. Proposed Rule 803(k) would require the issue and the issuer of BLNs to meet the minimum assets/equity, earnings, distribution and aggregate market value/principal amount criteria established in existing Exchange Rule 803(f).[5]

Rule 803(k)(2) would establish a minimum tangible net worth requirement of at least $250,000,000 for issuers of securities to which BLNs will be linked, or an alternative minimum tangible net worth requirement of at least $150,000,000 if the issuer meets further financial requirements. In addition, issuers of BLNs and the underlying securities to which they are linked would be required to meet certain criteria which generally track those established in Amex Rule 107B for ELNs linked to more than one security. Rule 803(k)(3) would require each underlying linked stock to meet certain minimum market capitalization and trading volume tests. Rule 803(k)(4) would require each issuer of an underlying stock to which the BLN is linked to be a 1934 Act reporting company listed on a national securities exchange or traded through the facilities of a national securities system and subject to last sale reporting. Rule 803(k)(4) would impose additional requirements with respect to any underlying linked security which is stock of a non-U.S. company traded in the U.S. market as sponsored American Depositary Shares (''ADS''), ordinary shares or otherwise (''Foreign Securities''). Specifically, the proposed rule would require either that the Exchange have in place a comprehensive surveillance sharing agreement with the primary exchange on which each such Foreign Security is traded, or that the Foreign Security meets additional trading volume requirements. Proposed Rule 803(k)(5) would limit each underlying linked stock to which the BLN relates to 5% of the total common shares of such entity, with stricter requirements applicable to underlying linked stocks which are Foreign Securities. Proposed Rule 803(k)(6) provides that BLNs will be treated as equity instruments. Finally, Rule 803(k)(7) would require underlying linked securities which are Foreign Securities to have a minimum of 2,000 holders.

The Exchange will apply to BLNs a one-year minimum term requirement. The Exchange will put in place appropriate surveillance procedures for BLNS, and will cap the number of underlying securities that may be linked to a BLN at twenty. The trading rules and procedures established by the Exchange for ELNs will apply equally to BLNs.

2. Statutory Basis

The proposed rule change is consistent with Section 6(b) of the Act[6] in general, and furthers the objectives of Section 6(b)(5)[7] in particular, in that it is designed to promote just and equitable principles of trade, to foster cooperation and coordination with persons engaged in regulating, clearing, settling, processing information with respect to, and facilitating transactions in securities, to remove impediments to and perfect the mechanism of a free and open market and a national market system, and, in general, to protect investors and the public interest, and is not designed to permit unfair discrimination between customers, issuers, brokers or dealers.

*B. Self-Regulatory Organization's Statement on Burden on Competition*

The Phlx does not believe that the proposed rule change will impose any inappropriate burden on competition.

*C. Self-Regulatory Organization's Statement on Comments on the Proposed Rule Change Received From Members, Participants, or Others*

No written comments were either solicited or received.

**III. Solicitation of Comments**

Interested persons are invited to submit written data, views and arguments concerning the foregoing, including whether the proposed rule change, as amended, is consistent with the Act. Persons making written submissions should file six copies

[4] *See* Securities Exchange Act Release No. 42582 (March 27, 2000), 65 FR 17685 (April 4, 2000) (granting accelerated approval of the Amex proposal to list and trade notes linked to a basket of equity securities). Amex Rule 107B applies both to ELNs linked to a single security and to ELNs linked to a basket of securities. Phlx is retaining its separate ELNs rule, Rule 803(h), applicable to hybrid securities linked to a single security. Proposed Rule 803(k) applies only in the case of multiple linked securities. Proposed Rule 803(k) does not include certain changes recently approved with respect to Amex Rule 107B that provide for ELNs linked to convertible bonds. *See* Securities Exchange Act Release No. 43162 (August 16, 2000), 65 FR 51374 (August 23, 2000).

[5] Exchange Rule 803(f) is the Exchange's listing standard for ''Other Securities.''

[6] 15 U.S.C. 78f(b).

[7] 15 U.S.C. 78f(b)(5).

thereof with the Secretary, Securities and Exchange Commission, 450 Fifth Street, NW., Washington, DC 20549–0609. Copies of the submission, all subsequent amendments, all written statements with respect to the proposed rule change that are filed with the Commission, and all written communications relating to the proposed rule change between the Commission and any person, other than those that may be withheld from the public in accordance with the provisions of 5 U.S.C. 552, will be available for inspection and copying in the Commission's Public Reference Room. Copies of such filing will also be available for inspection and copying at the principal office of the Phlx. All submissions should refer to File No. SR–Phlx–00–90 and should be submitted by January 5, 2001.

## IV. Commission's Findings and Order Granting Accelerated Approval of the Proposed Rule Change

After careful consideration, the Commission finds that the proposal, as amended, is consistent with the requirements of the Act and the rules and regulations thereunder applicable to a national securities exchange. Specifically, the Commission finds that the proposal is consistent with Section 6(b)(5) of the Act,[8] which requires that the rules of a national securities exchange be designed to prevent fraudulent and manipulative acts and practices, promote just and equitable principles of trade, foster cooperation and coordination with persons engaged in facilitating transactions in securities, and remove impediments to and perfect the mechanism of a free and open market and a national market system.

The Commission notes that it has previously approved similar listing standards for equity linked products.[9] The proposed rule change will permit the Exchange to list and trade BLNs, thereby providing investors with an additional marketplace in which to trade these products. Thus, the proposal should bring increased efficiency, price competition, and greater liquidity to the markets for these products. The Commission believes that this proposal is also consistent with Section 6(b)(5) of the Act [10] because requiring each of the underlying securities linked to the BLNs to meet the established listing standards should strengthen the integrity of the security and reduce the susceptibility of BLNs to manipulation.[11]

The Commission finds good cause for approving the proposed rule change prior to the 30th day after the date of publication of notice thereof in the **Federal Register**. As noted above, the listing requirements for these instruments will be substantially similar to those of the Amex, which the Commission approved in the past.[12] The proposal thus concerns issues that already have been the subject of a full comment period pursuant to Section 19(b) of the Act.[13] The Commission does not believe that the proposed rule change raises novel regulatory issues that have not been addressed already. Therefore, the Commission finds good cause for approving the proposed rule change on an accelerated basis.

## V. Conclusion

*It is therefore ordered,* pursuant to Section 19(b)(2) of the Act,[14] that the proposed rule change (SR–Phlx–00–90), as amended, is hereby approved on an accelerated basis.

For the Commission, by the Division of Market Regulation, pursuant to delegated authority.[15]

**Margaret H. McFarland,**

*Deputy Secretary.*

[FR Doc. 00–31994 Filed 12–14–00; 8:45 am]

BILLING CODE 8010–01–M

[8] 15 U.S.C. 78f(b)(5).

[9] *See supra* note 4.

[10] 15 U.S.C. 78f(b)(5).

[11] In approving this proposal, the Commission has considered its impact on efficiency, competition, and capital formation. 15 U.S.C. 78c(f).

[12] *See supra* note 4.

[13] 15 U.S.C. 78s(b).

[14] 15 U.S.C. 78s(b)(2).

[15] 17 CFR 200.30–3(a)(12).

---

## SECURITIES AND EXCHANGE COMMISSION

**[Release No. 34–43696; File No. SR–PHLX–00–99]**

## Self-Regulatory Organizations; Notice of Filing and Immediate Effectiveness of Proposed Rule Change by the Philadelphia Stock Exchange, Inc. Establishing Two Systems Changes and Corresponding Fees to Members and Member Organizations for Receiving Certain Equity Information on a Real-Time Basis

December 8, 2000.

Pursuant to Section 19(b)(1) of the Securities Exchange Act of 1934 (''Act''),[1] and rule 19b–4 thereunder,[2] notice is hereby given that on November 30, 2000, the Philadelphia Stock Exchange, Inc (''Phlx'' or ''Exchange'') filed with the Securities and Exchange Commission (''Commission'' or ''SEC'') the proposed rule change as described in Items I, II, and III below, which Items have been prepared by the Exchange. The Commission is publishing this notice to solicit comments on the proposed rule change from interested persons.

### I. Self-Regulatory Organization's Statement of the Terms of Substance of the Proposed Rule Change

The Phlx proposes to effect a systems change and amend its schedule of dues, fees and charges to impose a $.10 per trade off-Exchange information fee for Phlx equity specialist units utilizing an enhancement to the Phlx electronic equity system, the Phlx Automated Communication and Execution (''PACE'') System,[3] that provides equity specialists on the floor with real-time trade information respecting Super Designated Order Turnaround (''Super Dot'') transactions in New York Stock Exchange, Inc. (''NYSE'') securities.[4]

In addition, Phlx proposes to effect a systems change and amend its schedule of dues, fees and charges to impose a $300 per month remote information access fee on members and member organizations utilizing another enhancement to the PACE System that provides real-time trade information respecting trading positions to a remote access terminal.

### II. Self-Regulatory Organization's Statement of the Purpose of, and Statutory Basis for, the Proposed Rule Change

In its filing with the Commission, the Phlx included statements concerning the purpose of and basis for the proposed rule change and discussed any comments it received on the proposed rule change. The text of these statements may be examined at the places specified in Item IV below. The Phlx has prepared summaries, set forth in Sections A, B, and C below, of the most significant aspects of such statements.

*A. Self-Regulatory Organization's Statement of the Purpose of, and Statutory Basis for, the Proposed Rule Change.*

1. Purpose

The purpose of the proposed rule change is to effect a systems change and amend the Phlx's fee schedule to impose a $.10 per trade off-Exchange trade information fee and a $300 per month remote information access fee for Phlx specialist units, who choose to

[1] 15 U.S.C. 78s(b)(1).

[2] 17 CFR 240.19b–4.

[3] *See* Phlx Rule 229.

[4] SuperDot is an order routing system of the NYSE.

utilize respective enhancements to the PACE System. These fees address the cost of, and demand for, these new interfaces, which offer important new risk management tools to Phlx specialists.

*$.10 Per Trade Off-Exchange Trade Information Fee.* The first of the new enhancements provides certain real-time positions to Phlox specialist units. Specifically, it enhances the Exchange's proprietary risk management systems by allowing Phlx specialist units to obtain more complete data reflecting real-time positions for their respective trading accounts for DOT transactions by means of a real-time interface with the PACE System. The enhancement incorporates DOT trades on a real-time basis into the Phlx specialist unit's position reports, which are displayed electronically via the PACE System. This feature, including the interface, is voluntary.

The proposed fee is being instituted to defray costs of establishing real-time DOT interfaces with various member organizations, providing trade information to Phlx specialist units as well as to cover costs of maintenance and operation.[5] The real-time interface should contribute to enhancing the Phlx specialist unit's ability to track trading account positions by allowing more complete, time-sensitive position reports to be developed reflecting DOT transactions.

*$300 Per Month Remote Information Access Fee.* The second of the new enhancements allows specialist units to view trading positions from a remote access terminal off the trading floor. The new feature provides real-time positions to the off-floor (or ''upstairs'' offices of Phlx specialist units via a PACE System dial-up connection. This enhancement will enable the upstairs office of the Phlx specialist units access to data reflecting real-time positions for their respective trading accounts with specific detail, including the security, the last sale of that security, the profit or loss of the position, and a total long and/or short dollar value. This enhancement incorporates trades on a real-time basis into the specialist unit's position reports, which are displayed electronically at a remote access terminal via a dial-up connection. This feature, which is voluntary,[6] is a means for off-floor principals of Phlx specialist units to gauge their unit's risk exposure.

The proposed fee is being instituted to defray the costs of and demand for this risk management report as well as maintenance and operation of the dial-up connection service. The Exchange is choosing to charge a flat monthly fee for this service. The Exchange believes that a flat monthly fee is appropriate as the fee for the remote access feature reflects the cost of creating and maintaining a dial-up connection with the off-floor offices of the specialist. Information transmitted through this dial-up connection is substantially similar to the information currently received by the specialist unit on the floor of the Exchange. The remote access feature should contribute to enhancing the upstairs office's ability to track trading account positions by allowing more complete, time-sensitive position reports to be viewed by a principals of specialist units from off the floor.

2. Statutory Basis

The Exchange believes the proposed rule change is consistent with Section 6(b)(4) and (6)(5) of the Act[7] in that it provides for the equitable allocation of reasonable dues, fees and other charges among its members and other persons using its facilities and promotes just and equitable principles of trade.

*B. Self-Regulatory Organization's Statement on Burden on Competition*

The Exchange does not believe that the proposed rule change will impose any burden on competition.

*C. Self-Regulatory Organization's Statement on Comments on the Proposed Rule Change Received From Members, Participants, or Others*

The Exchange has neither solicited nor received written comments on the proposed rule change.

## III. Date of Effectiveness of the Proposed Rule Change and Timing for Action

The foregoing rule change, which (1) establishes or changes a due, fee, or other charge imposed by the Exchange and (2) effects a change in an existing order-entry or trading system of the Exchange that (i) does not significantly affect the protection of investors of the public interest; (ii) does not impose any significant burden on competition; and (iii) does not have the effect of limiting the access to or availability of the system, has become effective pursuant to Section 19(b)(3)(A) of the Act[8] and subparagraph (f)(2) and (f)(5) of Rule 19b–4 thereunder.[9] At any time within 60 days of the filing of the proposed rule change, the Commission may summarily abrogate such rule change if it appears to the Commission that such action is necessary or appropriate in the public interest, for the protection of investors, or otherwise in furtherance of the purposes of the Act.

## IV. Solicitation of Comments

Interested persons are invited to submit written data, views, and arguments concerning the foregoing, including whether the proposed rule change is consistent with the Act. Persons making written submissions should file six copies thereof with the Secretary, Securities and Exchange Commission, 450 Fifth Street, N.W., Washington, D.C. 20549–0609. Copies of the submission, all subsequent amendments, all written statements with respect to the proposed rule change that are filed with the Commission, and all written communications relating to the proposed rule change between the Commission and any person, other than those that may be withheld from the public in accordance with the provisions of 5 U.S.C. 552, will be available for inspection and copying at the Commission's Public Reference Room. Copies of such filing also will be available for inspection and copying at the principal office of the Phlx. All submissions should refer to File No. SR–PHLX–00–99 and should be submitted by January 5, 2001.

For the Commission, by the Division of Market Regulation, pursuant to delegated authority.[10]

**Margaret H. McFarland,**

*Deputy Secretary.*

[FR Doc. 00–31995 Filed 12–14–00; 8:45 am]

BILLING CODE 8010–01–M

[5] As originally filed, the purpose section stated that the enhancement provided execution services to Phlx specialist units. The Exchange has clarified that the enhancement does not provide execution services to Phlx specialist units. Instead, the enhancement only provides trade information to Phlx specialist units, which the specialist units may then use as they see fit. As per telephone conversation between John Dayton, Assistant Secretary and Counsel, Phlx, and Heather Traeger, Attorney, SEC, Division of Marker Regulation, on December 7, 2000.

[6] The Phlx confirmed that this feature is voluntary. *Id.*

[7] 15 U.S.C. 78f(b)(4) and (b)(5).

[8] 15 U.S.C. 78s(b)(3)(A).

[9] 17 CFR 240.19b–4(f)(2) and (f)(5).

[10] 17 CFR 240.30–2(a)(12).

# SMALL BUSINESS ADMINISTRATION

**[Declaration of Disaster #3304]**

## State of Michigan; Amendment #2

In accordance with information received from the Federal Emergency Management Agency, dated December 1, 2000, the above-numbered Declaration is hereby amended to extend the deadline for filing applications for physical damages as a result of this disaster to December 18, 2000.

All other information remains the same, i.e., the deadline for filing applications for economic injury is July 17, 2001.

(Catalog of Federal Domestic Assistance Program Nos. 59002 and 59008)

Dated: December 7, 2000.

**Allan I. Hoberman,**

*Acting Associate Administrator for Disaster Assistance.*

[FR Doc. 00–31972 Filed 12–14–00; 8:45 am]

BILLING CODE 8025–01–P

## OFFICE OF THE UNITED STATES TRADE REPRESENTATIVE

### Renewal of Treatment on Government Procurement of Products From Countries Designated Under the Caribbean Basin Economic Recovery Act

**AGENCY:** Office of the United States Trade Representative.

**ACTION:** Renewal of Treatment on Government Procurement of Products from Countries Designated under the Caribbean Basin Economic Recovery Act.

Under the authority delegated to me by the President in section 1–201 of Executive order 12260 of December 31, 1980, I hereby direct that products of countries, listed below, designated by the President as beneficiaries under the Caribbean Basin Economic Recovery Act (19 U.S.C. 2701, et seq.) with the exception of the Dominican Republic, Honduras, and Panama, shall continue to be treated as eligible products for purposes of section 1–101 of Executive Order 12260 until September 30, 2001. Such treatment shall not apply to products originating in these countries that are excluded from duty free treatment under 19 U.S.C. 2703(b). Decisions on the subsequent renewal of this treatment beyond September 30, 2001 will be based on beneficiaries' efforts to improve domestic procurement practices, on their support for relevant international initiatives, such as those in the World Trade Organization (WTO) Working Group on Transparency in Government Procurement and the Free Trade Area of the Americas (FTAA) Negotiating Group on Government Procurement, and on their progress toward acceding to the WTO Government Procurement Agreement.

List of Countries Designated as Beneficiary Countries for Purpose of the Caribbean Basin Economic Recovery Act (CBERA): Antigua and Barbuda, Aruba, the Bahamas, Barbados, Belize, Costa Rica, Dominica, the Dominican Republic; El Salvador; Grenada, Guatemala, Guyana, Haiti, Honduras, Jamaica, Nicaragua, Panama, St. Lucia, St. Vincent and the Grenadines, Trinidad and Tobago, Montserrat, Netherlands Antilles, Saint Kitts-Nevis, British Virgin Islands.

**Charlene Barshefsky,**

*United States Trade Representative.*

[FR Doc. 00–32042 Filed 12–14–00; 8:45 am]

BILLING CODE 3190–01–M

## DEPARTMENT OF TRANSPORTATION

### Federal Railroad Administration

### Petition for Waiver of Compliance

In accordance with Part 211 of Title 49 Code of Federal Regulations (CFR), notice is hereby given that the Federal Railroad Administration (FRA) received a request for a waiver of compliance with certain requirements of its safety standards. The individual petition is described below, including the party seeking relief, the regulatory provisions involved, the nature of the relief being requested, and the petitioner's arguments in favor of relief.

**The South Carolina Railroad Museum, Inc.**

[Docket Number FRA–2000–8249]

The South Carolina Railroad Museum (SCMX), Inc. of Columbia, South Carolina, has petitioned for a permanent waiver of compliance for four passenger coaches and one dining car from the requirements of the Railroad Power Brakes and Drawbars, 49 CFR Part 232.17(b)(2), which requires that air brake equipment on passenger cars be cleaned, repaired, lubricated, and tested (COTS) as often as necessary, but not less frequently then as required in Standard S–045 in the Manual of Standards and Recommended Practices of the Association of American Railroads (AAR). Standard S–045 requires that these cars equipped with S–22 brake equipment receive COTS every 24 months. The museum requests that the maintenance interval be extended from 24 months to 60 months. SCMX indicates that cars are utilized in excursion service and for special charters and were used 53 days in the last calendar year.

Interested parties are invited to participate in these proceedings by submitting written views, data, or comments. FRA does not anticipate scheduling a public hearing in connection with these proceedings since the facts do not appear to warrant a hearing. If any interested party desires an opportunity for oral comment, they should notify FRA, in writing, before the end of the comment period and specify the basis for their request.

All communications concerning these proceedings should identify the appropriate docket number (*e.g.*, Waiver Petition Docket Number FRA–2000–8249) and must be submitted in triplicate to the Docket Clerk, DOT Central Docket Management Facility, Room Pl–401, Washington, DC 20590–0001. Communications received within 45 days of the date of this notice will be considered by FRA before final action is taken. Comments received after that date will be considered as far as practicable. All written communications concerning these proceedings are available for examination during regular business hours (9:00 a.m.—5:00 p.m.) at DOT Central Docket Management Facility, Room Pl–401 (Plaza Level), 400 Seventh Street SW., Washington. All documents in the public docket are also available for inspection and copying on the Internet at the docket facility's Web site at *http://dms.dot.gov.*

Issued in Washington, DC, on December 11, 2000.

**Grady C. Cothen, Jr.,**

*Deputy Associate Administrator for Safety Standards and Program Development.*

[FR Doc. 00–31975 Filed 12–14–00; 8:45 am]

BILLING CODE 4910–06–P

## DEPARTMENT OF TRANSPORTATION

### Maritime Administration

**[Docket Number: MARAD–2000–8519]**

### Requested Administrative Waiver of the Coastwise Trade Laws

**AGENCY:** Maritime Administration, Department of Transportation.

**ACTION:** Invitation for public comments on a requested administrative waiver of the Coastwise Trade Laws for the vessel GINGERSNAP.

**SUMMARY:** As authorized by Pub. L. 105–383, the Secretary of Transportation, as represented by the Maritime Administration (MARAD), is authorized to grant waivers of the U.S.-build requirement of the coastwise laws under certain circumstances. A request for such a waiver has been received by MARAD. The vessel, and a description of the proposed service, is listed below. Interested parties may comment on the effect this action may have on U.S. vessel builders or businesses in the U.S. that use U.S.-flag vessels. If MARAD determines that in accordance with Pub. L. 105–383 and MARAD's regulations at

46 CFR Part 388 (65 FR 6905; February 11, 2000) that the issuance of the waiver will have an unduly adverse effect on a U.S.-vessel builder or a business that uses U.S.-flag vessels, a waiver will not be granted.

**DATES:** Submit comments on or before January 16, 2001.

**ADDRESSES:** Comments should refer to docket number MARAD–2000–8519. Written comments may be submitted by hand or by mail to the Docket Clerk, U.S. DOT Dockets, Room PL–401, Department of Transportation, 400 7th St., S.W., Washington, D.C. 20590–0001. You may also send comments electronically via the Internet at http://dmses.dot.gov/submit/. All comments will become part of this docket and will be available for inspection and copying at the above address between 10 a.m. and 5 p.m., E.T., Monday through Friday, except federal holidays. An electronic version of this document and all documents entered into this docket is available on the World Wide Web at http://dms.dot.gov.

**FOR FURTHER INFORMATION CONTACT:** Gordon Angell, U.S. Department of Transportation, Maritime Administration, MAR–832 Room 7201, 400 Seventh Street, S.W., Washington, DC 20590. Telephone 202–366–5129.

**SUPPLEMENTARY INFORMATION:** Title V of Pub. L. 105–383 provides authority to the Secretary of Transportation to administratively waive the U.S.-build requirements of the Jones Act, and other statutes, for small commercial passenger vessels (no more than 12 passengers). This authority has been delegated to the Maritime Administration per 49 CFR § 1.66, Delegations to the Maritime Administrator, as amended. By this notice, MARAD is publishing information on a vessel for which a request for a U.S.-build waiver has been received, and for which MARAD requests comments from interested parties. Comments should refer to the docket number of this notice and the vessel name in order for MARAD to properly consider the comments. Comments should also state the commenter's interest in the waiver application, and address the waiver criteria given in § 388.4 of MARAD'S regulations at 46 CFR Part 388.

**Vessel Proposed for Waiver of the U.S.-Build Requirement**

(1) Name of vessel and owner for which waiver is requested. *Name of vessel:* GINGERSNAP. *Owner:* Wesley Adams & Susan Adams.

(2) *Size, capacity and tonnage of vessel. According to the applicant:* ''Length—26′, Beam 8′, Depth 6′, Capacity 12 passengers, Tonnage 6.7 tons (measured by taking: the dry weight of the vessel = 7,500 lb she draws 3ft of her 6′ hull thus displacing more than twice her weight 7,500 × 2 = 15000/2,240 lb = 6.696).''

(3) Intended use for vessel, including geographic region of intended operation and trade. According to the applicant: ''This vessel would be used as a sight-seeing boat in the Port Ludlow, WA area. Giving tourists a chance to see the surrounding waters on a vessel similar to those used in the area at the turn of the century.'' ''The intended area of operation will include the north Puget Sound areas of Port Ludlow, north Hoods Canal, and Admiralty Inlet from Point No Point to Point Wilson (Washington State).''

(4) Date and Place of construction and (if applicable) rebuilding. *Date of construction:* Unknown. *Place of construction:* Unknown.

(5) *A statement on the impact this waiver will have on other commercial passenger vessel operators. According to the applicant:* ''There are currently three Charter Services operating out of the Port Ludlow area: *Captain Bry's Charters:* Which I own. Currently operating a 26′ sailboat. Specializing in 2 hour Sailboat Cruises & Lessons. *Captain Larry's Adventures:* Operating a 26′ Orca Marine recreational fishing vessel specializing in day trips and fishing excursions. My new vessel will not compete at all with fishing (as it is not a fishing boat at all,) and as for tours * * * his boat cruises at 40knts and GINGERSNAP tops out at 9knts. Not really the same market. *PCO Marine:* Operating a 44′ Tolly Motor Yacht. PCO specializes in day cruises featuring creature comforts and food and beverage service. Luxury cruises. As for the effect that Gingersnap will have on his business, Captain Ottnes is retired and runs the charters as a hobby. Gingersnap will not take away anyone that wants luxury * * * she's comfortable, but not luxurious—and not fast. There are also charters available from Port Townsend (most notably Captain Jack's, a 45′—30 passenger aluminum tour boat,) but none that would profit from $10 cruises around Port Ludlow, or taking small groups to and from Port Townsend. Most of the available charter services are run as hobbies, and there are none listed in our local phone book that operate locally. (That's why I started doing it!)''

(6) *A statement on the impact this waiver will have on U.S. shipyards. According to the applicant:* ''There should be no impact at all regarding builders from this waiver. Nobody builds launches like this anymore. There are still wooden boat builders, but the market for small launches of this sort is negligible. As for the shipyards * * * Gingersnap will give the local yards plenty of work due to her age. (It's the nature of wooden boats * * * they like to be worked on.)''

Dated: December 12, 2000.

By Order of the Maritime Administrator.

**Joel C. Richard,**

*Secretary, Maritime Administration.*

[FR Doc. 00–32012 Filed 12–14–00; 8:45 am]

**BILLING CODE 4910–81–P**

---

## DEPARTMENT OF TRANSPORTATION

### Maritime Administration

**[Docket Number: MARAD–2000–8518]**

### Requested Administrative Waiver of the Coastwise Trade Laws

**AGENCY:** Maritime Administration, Department of Transportation.

**ACTION:** Invitation for public comments on a requested administrative waiver of the Coastwise Trade Laws for the vessel REFLECTION.

**SUMMARY:** As authorized by Pub. L. 105–383, the Secretary of Transportation, as represented by the Maritime Administration (MARAD), is authorized to grant waivers of the U.S.-build requirement of the coastwise laws under certain circumstances. A request for such a waiver has been received by MARAD. The vessel, and a description of the proposed service, is listed below. Interested parties may comment on the effect this action may have on U.S. vessel builders or businesses in the U.S. that use U.S.-flag vessels. If MARAD determines that in accordance with Pub. L. 105–383 and MARAD's regulations at 46 CFR part 388 (65 FR 6905; February 11, 2000) that the issuance of the waiver will have an unduly adverse effect on a U.S.-vessel builder or a business that uses U.S.-flag vessels, a waiver will not be granted.

**DATES:** Submit comments on or before January 16, 2001.

**ADDRESSES:** Comments should refer to docket number MARAD–2000–8518. Written comments may be submitted by hand or by mail to the Docket Clerk, U.S. DOT Dockets, Room PL–401, Department of Transportation, 400 7th St., SW., Washington, DC 20590–0001. You may also send comments electronically via the Internet at http://dmses.dot.gov/submit/. All comments will become part of this docket and will be available for inspection and copying at the above address between 10 a.m. and 5 p.m., E.T., Monday through Friday, except federal holidays. An

electronic version of this document and all documents entered into this docket is available on the World Wide Web at http://dms.dot.gov.

**FOR FURTHER INFORMATION CONTACT:** Gordon Angell, U.S. Department of Transportation, Maritime Administration, MAR–832 Room 7201, 400 Seventh Street, SW., Washington, DC 20590. Telephone 202–366–5129.

**SUPPLEMENTARY INFORMATION:** Title V of Pub. L. 105–383 provides authority to the Secretary of Transportation to administratively waive the U.S.-build requirements of the Jones Act, and other statutes, for small commercial passenger vessels (no more than 12 passengers). This authority has been delegated to the Maritime Administration per 49 CFR 1.66, Delegations to the Maritime Administrator, as amended. By this notice, MARAD is publishing information on a vessel for which a request for a U.S.-build waiver has been received, and for which MARAD requests comments from interested parties. Comments should refer to the docket number of this notice and the vessel name in order for MARAD to properly consider the comments. Comments should also state the commenter's interest in the waiver application, and address the waiver criteria given in § 388.4 of MARAD'S regulations at 46 CFR part 388.

**Vessel Proposed for Waiver of the U.S.-Build Requirement**

(1) Name of vessel and owner for which waiver is requested.

Name of vessel: REFLECTION. Owner: Gary and Roxanna Wagner D.B.A. Blue Heron Charters, Inc., a New York Corporation.

(2) Size, capacity and tonnage of vessel. According to the applicant: ''REFLECTION is a cutter rig sailboat. 44′5″ LOA, 35′4″ LWL, 13′ Beam, 6′ draft, Displacement 23,400 lbs. With a keel of 10,300 lbs.''

(3) Intended use for vessel, including geographic region of intended operation and trade. According to the applicant: ''We intend to engage in day and overnight charters of 6 passengers or less (OUPV). These will be of the ''Black Tie'' Day Sail and Custom overnight charters in the Coastal waters of the Northeast US.''

(4) Date and Place of construction and (if applicable) rebuilding. Date of construction: 1976. Place of construction: Oakhill, Ontario.

(5) A statement on the impact this waiver will have on other commercial passenger vessel operators. According to the applicant: ''Sailing vessel REFLECTION will have negligible impact on activities in the Northeast as our intention is to provide service for 6 passengers or less as a day sail activity in the New Jersey/New York area waters and as an overnight ''Black Tie'' custom charters for 4 or less passengers. This activity will take place probably no more than four (4) or five (5) times per month. To our knowledge there is no sailing vessel making these cruises out of the Atlantic Highlands, New Jersey area. We have found only one (1) making day sails out of a New York City Harbor. Our intention is to sail out of a New Jersey location. We have found no OUPV charters running out of the Long Island Sound area sailing toward the Block Island waters. We have found no OUPV charters running out of the New Jersey area sailing toward the Cape May waters. We feel that the impact of our activities is of minimal or negligible impact to any activities currently in service in the Northeast waters of the U.S.''

(6) A statement on the impact this waiver will have on U.S. shipyards. According to the applicant: ''Sailing vessel REFLECTION will be serviced by small boatworks in the northeast. Current plans are to continue with relationships currently established with the Brewer Yards in Glen Cove, New York; Carriage House in Seabright, NJ; Marine Engine Service in New Jersey; and Bock Marina in Beaufort, North Carolina. These yards permit us to work on systems ourselves and where our expertise is ''short'' provide professional experts in a variety of boat maintenance and service disciplines. We feel that our impact will be minimal but of a positive nature as these yards (and others we will use as the occasion arises) use U.S. domestic labor and certified service providers.''

Dated: December 12, 2000.

By Order of the Maritime Administrator.

**Joel C. Richard,**

*Secretary, Maritime Administration.*

[FR Doc. 00–32010 Filed 12–14–00; 8:45 am]

**BILLING CODE 4910–81–P**

---

## DEPARTMENT OF TRANSPORTATION

### Maritime Administration

**[Docket Number: MARAD–2000–8520]**

### Requested Administrative Waiver of the Coastwise Trade Laws

**AGENCY:** Maritime Administration, Department of Transportation.

**ACTION:** Invitation for public comments on a requested administrative waiver of the Coastwise Trade Laws for the vessel SEASCAPE.

**SUMMARY:** As authorized by Pub. L. 105–383, the Secretary of Transportation, as represented by the Maritime Administration (MARAD), is authorized to grant waivers of the U.S.-build requirement of the coastwise laws under certain circumstances. A request for such a waiver has been received by MARAD. The vessel, and a description of the proposed service, is listed below. Interested parties may comment on the effect this action may have on U.S. vessel builders or businesses in the U.S. that use U.S.-flag vessels. If MARAD determines that in accordance with Pub. L. 105–383 and MARAD's regulations at 46 CFR part 388 (65 FR 6905; February 11, 2000) that the issuance of the waiver will have an unduly adverse effect on a U.S.-vessel builder or a business that uses U.S.-flag vessels, a waiver will not be granted.

**DATES:** Submit comments on or before January 16, 2001.

**ADDRESSES:** Comments should refer to docket number MARAD–2000–8520. Written comments may be submitted by hand or by mail to the Docket Clerk, U.S. DOT Dockets, Room PL–401, Department of Transportation, 400 7th St., S.W., Washington, D.C. 20590–0001. You may also send comments electronically via the Internet at http://dmses.dot.gov/submit/. All comments will become part of this docket and will be available for inspection and copying at the above address between 10 a.m. and 5 p.m., E.T., Monday through Friday, except federal holidays. An electronic version of this document and all documents entered into this docket is available on the World Wide Web at http://dms.dot.gov.

**FOR FURTHER INFORMATION CONTACT:** Gordon Angell, U.S. Department of Transportation, Maritime Administration, MAR–832 Room 7201, 400 Seventh Street, SW., Washington, DC 20590. Telephone 202–366–5129.

**SUPPLEMENTARY INFORMATION:** Title V of Pub. L. 105–383 provides authority to the Secretary of Transportation to administratively waive the U.S.-build requirements of the Jones Act, and other statutes, for small commercial passenger vessels (no more than 12 passengers). This authority has been delegated to the Maritime Administration per 49 CFR § 1.66, Delegations to the Maritime Administrator, as amended. By this notice, MARAD is publishing information on a vessel for which a request for a U.S.-build waiver has been received, and for which MARAD requests comments from interested parties. Comments should refer to the docket number of this notice and the vessel name in order for MARAD to

properly consider the comments. Comments should also state the commenter's interest in the waiver application, and address the waiver criteria given in § 388.4 of MARAD'S regulations at 46 CFR part 388.

**Vessel Proposed for Waiver of the U.S.-Build Requirement**

(1) Name of vessel and owner for which waiver is requested. *Name of vessel:* SEASCAPE. *Owner:* Darryl and Cindy Aken.

(2) *Size, capacity and tonnage of vessel. According to the applicant:* ''52 Feet, *Capacity:* 12 Persons, *Tonnage:* 25.''

(3) Intended use for vessel, including geographic region of intended operation and trade. According to the applicant: ''I plan to charter the SEASCAPE for short periods for Harbor cruises in Marina del Rey and corporate sightseeing cruises. The geographic limits within which I will operate are in the Pacific Ocean from Santa Barbara to Newport Beach, CA and out to the Channel Islands and Catalina Island.''

(4) Date and Place of construction and (if applicable) rebuilding. *Date of construction:* 1990. *Place of construction:* Taiwan.

(5) *A statement on the impact this waiver will have on other commercial passenger vessel operators. According to the applicant:* ''Most of the commercial passenger vessels operating in the geographic area referred to in item 8 are large, with capacities from 50 to 500 passengers. I do not believe I will have any impact on them. I, in fact, will provide to smaller parties similar experiences to the larger groups.''

(6) *A statement on the impact this waiver will have on U.S. shipyards. According to the applicant:* ''I do not believe the operation of my vessel will have any impact on U.S. shipyards.''

Dated: December 12, 2000.

By Order of the Maritime Administrator.

**Joel C. Richard,**

*Secretary, Maritime Administration.*

[FR Doc. 00–32011 Filed 12–14–00; 8:45 am]

BILLING CODE 4910–81–P

## DEPARTMENT OF TRANSPORTATION

### National Highway Traffic Safety Administration

**[Docket No. NHTSA 2000–8461; Notice 1]**

### Continental General Tire, Inc., Receipt of Application for Decision of Inconsequential Noncompliance

Continental General Tire, Inc., (Continental) has determined that approximately 3,187 P255/70R16 Ameri*660 AS passenger car tires do not meet the labeling requirements mandated by Federal Motor Vehicle Safety Standard (FMVSS) No. 109, ''New Pneumatic Tires.'' FMVSS No. 109 requires that each tire shall have permanently molded into or onto both sidewalls the actual number of plies in the sidewall, and the actual number of plies in the tread area if different. (S4.3(e)).

Pursuant to 49 U.S.C. 30118(d) and 30120(h), Continental has petitioned for a determination that this noncompliance is inconsequential to motor vehicle safety and has filed an appropriate report pursuant to 49 CFR Part 573, ''Defect and Noncompliance Reports.''

This notice of receipt of an application is published under 49 U.S.C. 30118 and 30120 and does not represent any agency decision or other exercise of judgment concerning the merits of the application.

The noncompliance with S4.3(e) relates to the mold number. Mold number 33460 ran for the production period of June 14, 2000 through July 29, 2000 with an incorrect sideplate on the bottom sidewall. This sideplate was not changed from a previous production run in which the construction was different. The stamping at the rim line read: ''Tread 6 plies—2 Steel + 2 Polyester + 2 Nylon.'' It should have read: ''Tread 4 Plies—2 Steel + 2 Polyester.''

The manufacturer also said that ''A second item should be included, which is not part of the FMVSS 109 requirement, but is considered a labeling inconsistency. The load index/speed rating stamping located on the bottom sidewall at both upper sidewall and rim line reads 109*H* should be 109*S*.''

The P255/70R16 General Ameri*660 AS primarily is supplied to General Motors (GM) for original equipment pick up truck application.

Continental states that all molded labeling items on the LW outboard (customer) sidewall are correct and that a label showing correct identification is affixed to the tread. The customer would be sold the product for designed usage and the incorrect information would be on the inboard (non-customer) sidewall.

This situation has been reviewed with representatives of GM and they have indicated their support of registering this problem as an inconsequential noncompliance. Continental believes that there is no safety-related issue with respect to this equipment.

Interested persons are invited to submit written data, views, and arguments on the application described above. Comments should refer to the docket number and be submitted to: U.S. Department of Transportation, Docket Management, Room PL–401, 400 Seventh Street, SW, Washington, DC 20590. It is requested that two copies be submitted.

All comments received before the close of business on the closing date indicated below will be considered. The application and supporting materials, and all comments received after the closing date, will also be filed and will be considered to the extent possible. When the application is granted or denied, the notice will be published in the **Federal Register** pursuant to the authority indicated below. Comment closing date: January 16, 2001.

(49 U.S.C. 301118, 301120; delegations of authority at 49 CFR 1.50 and 501.8)

Issued on: December 11, 2000.

**Stephen R. Kratzke,**

*Associate Administrator for Safety Performance Standards.*

[FR Doc. 00–31977 Filed 12–14–00; 8:45 am]

BILLING CODE 4910–59–P

## DEPARTMENT OF TRANSPORTATION

### Surface Transportation Board

**[STB Finance Docket No. 33968]**

### Safe Handling Rail, Inc.—Operation Exemption—Maine Coast Railroad Corporation, Maine Central Railroad Company, Springfield Terminal Railway Company, and State of Maine Department of Transportation

Safe Handling Rail, Inc. (SHR), a noncarrier, has filed a verified notice of exemption under 49 CFR 1150.31 to acquire, by assignment, the operating rights of Maine Coast Railroad Corporation (MECO) over approximately 5.76 route miles of rail line in Rockland, Sagadahoc County, ME (subject line), between milepost 28.03 (Church Road) and milepost 33.79 (Hardings).[1] In addition, SHR also will acquire MECO's incidental overhead trackage rights on the rail line between milepost 27.5 and milepost 33.79 (trackage rights).[2] The State of Maine Department of

[1] MECO acquired the authority to operate the subject line in *Maine Coast Railroad Corporation—Operation Exemption—Maine Central Railroad Company and Springfield Terminal Railway Company,* Finance Docket No. 32272 (ICC served June 21, 1993).

[2] MECO was granted trackage rights by Maine Central Railroad Corporation (MEC) and Springfield Terminal Railway Company (STR) in *Maine Coast Railroad Corporation—Trackage Rights Exemption—Maine Central Railroad Company and Springfield Terminal Railway Company,* Finance Docket No. 31768 (ICC served Nov. 26, 1990).

Transportation (MDOT) owns the subject line, and MEC and STR have residual common carrier obligations on the subject line.[3] Certain traffic handled by SHR to and from the Bath Iron Works at Hardings, ME, will be handled in the account of MEC/STR, just as it has been handled by MECO.

The transaction is expected to be consummated on or soon after December 8, 2000, the effective date of the exemption (7 days after the exemption was filed).

If the notice contains false or misleading information, the exemption is void *ab initio.* Petitions to reopen the proceeding to revoke the exemption under 49 U.S.C. 10502(d) may be filed at any time. The filing of a petition to reopen will not automatically stay the transaction.

An original and 10 copies of all pleadings, referring to STB Finance Docket No. 33968, must be filed with the Surface Transportation Board, Office of the Secretary, Case Control Unit, 1925 K Street, N.W., Washington, DC 20423–0001. In addition, a copy of each pleading must be served on Bruce A. Coggeshall, Esq., Pierce Atwood, One Monument Square, Portland, ME 04101.

[3] SHR will replace MECO as the operator of the subject line and trackage rights, and MECO will have no further rail carrier rights or obligations on the subject line or trackage rights line. In a related proceeding, SHR has filed a notice for a modified certificate of public convenience and necessity to operate MDOT's rail lines (i) between milepost 33.79, in Brunswick, ME, and milepost 85.55, in Rockland, ME, and (ii) between milepost 29.40, at Rock Junction, in Brunswick, and milepost 63.00, in Augusta, ME. *See Safe Handling Rail, Inc.—Modified Rail Certificate,* STB Finance Docket No. 33967.

Board decisions and notices are available on our website at ''WWW.STB.DOT.GOV.''

Decided: December 7, 2000.

By the Board, David M. Konschnik, Director, Office of Proceedings.

**Vernon A. Williams,**

*Secretary.*

[FR Doc. 00–31879 Filed 12–14–00; 8:45 am]

BILLING CODE 4915–00–P

## DEPARTMENT OF TRANSPORTATION

### Surface Transportation Board

**[STB Finance Docket No. 33914]**

### Texas Mexican Railway Company—Purchase Exemption—Union Pacific Railroad Company

**AGENCY:** Surface Transportation Board.

**ACTION:** Notice of exemption.

**SUMMARY:** Under 49 U.S.C. 10502, the Board is granting a petition for exemption from the prior approval requirements of 49 U.S.C. 11323–25 for Texas Mexican Railway Company (Tex Mex) to acquire from Union Pacific Railroad Company and operate (1) the Rosenberg Line, an 84.5-mile rail line between milepost 87.0 near Victoria and milepost 2.5 near Rosenberg, TX, and (2) approximately 6.3 miles of overhead trackage rights between mileposts 87.0 and 90.8 and between mileposts 2.5 and 0.0, subject to employee protective conditions.[1]

[1] Additionally, the Board is approving Tex Mex's request for permission to use the overhead trackage rights it acquired in *Union Pacific/Southern Pacific Merger,* 1 S.T.B. 233 (1996), to move the traffic that will originate or terminate on the Rosenberg Line.

**DATES:** This exemption is effective on December 21, 2000. Petitions to reopen must be filed by January 2, 2001.

**ADDRESSES:** An original and 10 copies of all pleadings referring to the exemption granted in STB Finance Docket No. 33914 must be filed with the Surface Transportation Board, Office of the Secretary, Case Control Unit, 1925 K Street, NW, Washington, DC 20423–0001. In addition, a copy of all pleadings must be served on petitioner's representative, Richard A. Allen, 888 17th Street, NW, Washington, DC 20006.

**FOR FURTHER INFORMATION CONTACT:** Joseph H. Dettmar (202) 565–1600. [TDD for the hearing impaired 1–800–877–8339.]

**SUPPLEMENTARY INFORMATION:** For further information, refer to the Board's decision served December 11, 2000.

To purchase a copy of the full decision, write to, call, or pick up in person from: Da-To-Da Office Solutions, 1925 K Street, NW, Room 405, Washington, DC 20006. Telephone: (202) 466–5530. [Assistance for the hearing impaired is available through TDD services 1–800–877–8339.]

Board decisions and notices are available on our website at ''WWW.STB.DOT.GOV.''

Decided: December 8, 2000.

By the Board, Chairman Morgan, Vice Chairman Burkes, and Commissioner Clyburn.

**Vernon A. Williams,**

*Secretary.*

[FR Doc. 00–31907 Filed 12–14–00; 8:45 am]

BILLING CODE 4915–00–P

## DEPARTMENT OF THE TREASURY

### Submission for OMB Review; Comment Request

December 7, 2000.

The Department of Treasury has submitted the following public information collection requirement(s) to OMB for review and clearance under the Paperwork Reduction Act of 1995, Public Law 104–13. Copies of the submission(s) may be obtained by calling the Treasury Bureau Clearance Officer listed. Comments regarding this information collection should be addressed to the OMB reviewer listed and to the Treasury Department Clearance Officer, Department of the Treasury, Room 2110, 1425 New York Avenue, NW., Washington, DC 20220.

**DATES:** Written comments should be received on or before January 16, 2001 to be assured of consideration.

**Internal Revenue Service (IRS)**

*OMB Number:* 1545–1700.

*Form Number:* IRS Form 8869.

*Type of Review:* Extension.

*Title:* Qualified Subchapter S Subsidiary Election.

*Description:* Effective for tax years beginning After December 31, 1996, Internal Revenue Code section 1361(b)(3) allows an S corporation to own a corporate subsidiary, but only if it is wholly owned. To do so, the parent S corporation must elect to treat the wholly-owned subsidiary as a qualified subchapter S subsidiary (Qsub). Form 8869 is used to make this election.

*Respondents:* Business or other for-profit.

*Estimated Number of Respondents/Recordkeepers:* 5,000.

*Estimated Burden Hours Per Respondent/Recordkeeper:*

Recordkeeping—6 hrs., 13 min.
Learning about the law or the form—53 min.
Preparing, copying, assembling and sending the form to the IRS—1 hr., 2 min.

*Frequency of Response:* On occasion.

*Estimated Total Reporting/Recordkeeping Burden:* 40,750 hours.

*OMB Number:* 1545–1702.

*Form Number:* IRS Form 8870.

*Type of Review:* Extension.

*Title:* Information Return for Transfers Associated With Certain Personal Benefit Contracts.

*Description:* Section 170(c) charitable organizations or section 664(d) charitable remainder trusts that paid premiums after February 8, 1999, on certain ''personal benefit contracts'' must file Form 8870.

*Respondents:* Not-for-profit institutions.

*Estimated Number of Respondents/Recordkeepers:* 5,000.

*Estimated Burden Hours Per Respondent/Recordkeeper:*

Recordkeeping—9 hrs., 48 min.
Learning about the law or the form—2 hrs., 22 min.
Preparing, copying, assembling, and sending the form to the IRS—2 hrs., 39 min.

*Frequency of Response:* Annually.

*Estimated Total Reporting/Recordkeeping Burden:* 74,200 hours.

*Clearance Officer:* Garrick Shear, Internal Revenue Service, Room 5244, 1111 Constitution Avenue, NW, Washington, DC 20224.

*OMB Reviewer:* Alexander T. Hunt, (202) 395–7860, Office of Management and Budget, Room 10202, New Executive Office Building, Washington, DC 20503.

**Lois K. Holland,**

*Departmental Reports, Management Officer.*

[FR Doc. 00–31954 Filed 12–14–00; 8:45 am]

BILLING CODE 4830–01–P

## DEPARTMENT OF THE TREASURY

### Fiscal Service

### Financial Management Service; Proposed Collection of Information: Management of Federal Agency Disbursements

**AGENCY:** Financial Management Service, Fiscal Service, Treasury.

**ACTION:** Notice and request for comments.

**SUMMARY:** The Financial Management Service, as part of its continuing effort to reduce paperwork and respondent burden, invites the general public and other Federal agencies to take this opportunity to comment on a continuing information collection. By this notice, the Financial Management Service solicits comments concerning the ''annual Financial Statement of Surety Companies—Schedule F.''

**DATES:** Written comments should be received on or before Frebruary 13, 2001.

**ADDRESSES:** Direct all written comments to financial management Service, 3700 East-West Highway, Programs Branch, Room 144, Hyattsville, Maryland 20782.

**FOR FURTHER INFORMATION CONTACT:** Requests for additional information or copies of the form(s) and instructions should be directed to the Surety Bond Branch, 3700 East-West Highway, Hyattsville, Maryland 20782 (202) 874–6775.

**SUPPLEMENTARY INFORMATION:** Pursuant to the Paperwork Reduction Act of 1995, (44 U.S.C. 3506(c)(2)(A)), the Financial Management Service solicits comments on the collection of information described below.

*Title:* Annual Financial Statement of Surety Companies—Schedule F.

*OMB Number:* 1510–0012.

*Form Number:* FMS 6314.

*Abstract:* This form provides information that is used to determine the amount of unauthorized reinsurance of a Treasury Certified Company, and to compute its underwriting limitations. This computation is necessary to ensure the solvency of companies certified by Treasury, and their ability to carry out contractual surety requirements.

*Current Actions:* Extension of currently approved collection.

*Type of Review:* Regular.

*Affected Public:* Business or other for-profit.

*Estimated Number of Respondents:* 451.

*Estimated Time Per Respondent:* Varies from 8 hours–80 hours.

*Estimated Total Annual Burden Hours:* 19,108.

*Comments:* Comments submitted in response to this notice will be summarized and/or included in the request for Office of Management and Budget approval. All comments will become a matter of public record. Comments are invited on: (a) Whether the collection of information is necessary for the proper performance of the Functions of the agency, including whether the information shall have practical utility; (b) the accuracy of the agency's estimate of the burden of the collection of information; (c) ways to enhance the quality, utility, and clarity of the information to be collected; (d) ways to minimize the burden of the collection of information on respondents, including through the use of automated collection techniques or other forms of information technology; and (e) estimates of capital or start-up costs and costs of operation, maintenance and purchase of services to provide information.

Dated: December 7, 2000.

**Judith R. Tillman,**

*Assistant Commissioner, Financial Operations.*

[FR Doc. 00–32043 Filed 12–14–00; 8:45 am]

BILLING CODE 4810–35–M

---

## DEPARTMENT OF THE TREASURY

### Office of Foreign Assets Control

### Payments to Persons Who Hold Certain Categories of Judgment Against Cuba or Iran

**AGENCY:** Department of the Treasury; Office of Foreign Assets Control.

**ACTION:** Notice.

**SUMMARY:** This notice explains the manner in which the Department of the Treasury interprets the direction in Section 2002 of the Victims of Trafficking and Violence Protection Act of 2000, Public Law No. 106–386 (''Section 2002'') to pay post-judgment interest on payments authorized by that section. This notice also explains that certain deficiencies in the information and documentation regarding payment information submitted by applicants will not prevent an application from being determined to be complying within the meaning of Part 3 of the **Federal Register** Notice published on November 22, 2000.

**FOR FURTHER INFORMATION CONTACT:** For questions regarding submission of applications, Rochelle E. Stern, Transactions Analysis Officer, Office of Foreign Assets Control. For legal questions, Brett D. Barkey, Attorney-Advisor, Office of the Chief Counsel (Foreign Assets Control). Both individuals can be reached at 202–622–2671 (not a toll free call).

**SUPPLEMENTARY INFORMATION:**

**Part 1**

Section 2002 provides that persons who hold certain judgments against Iran or Cuba may elect to receive payments from the Department of the Treasury equaling 110 percent or 100 percent ''of compensatory damages awarded by judgment of a court on a claim or claims brought by the person under section 1605(a)(7) of title 28, United States Code, plus amounts necessary to pay post-judgment interest under section 1961 of such title, and, in the case of a claim or claims against Cuba, amounts awarded as sanctions by judicial order on April 18, 2000 (as corrected on June 2, 2000), subject to final appellate review of that order,'' Section 2002(a)(1). This notice explains the manner in which the Department of the Treasury interprets the direction in Section 2002 to pay post-judgment interest under that section.

In making payments under Section 2002, subject to funds availability, the Department of the Treasury will pay post-judgment interest on 110 percent of compensatory damages or 100 percent of compensatory damages, according to whether the applicant elects to receive payment equaling 110 or 100 percent of compensatory damages. The Department of the Treasury will not pay post-judgment interest on portions of the judgment for which the applicant is not entitled to receive payment under Section 2002, including amounts awarded as punitive damages. Nor will the Department of the Treasury pay post-judgment interest on the amounts awarded as sanctions, as Section 2002(a)(1) does not provide for payment of post-judgment interest on sanctions awards.

**Part 2**

On November 22, 2000 at 65 FR 70382, the Office of Foreign Assets Control, Department of the Treasury, published a **Federal Register** Notice (''November Notice'') specifying the procedures necessary for persons to establish eligibility for payments authorized by Section 2002. The November Notice specified information that applicants must submit to establish eligibility and provided that an application would be determined to be ''complying if the Department of the Treasury determines that it has received, for its review, all the information and documentation specified in Part 2(a)–(f)'' of the November Notice. November Notice, Part 3(a).

Part 2(a)(2) of the November Notice specifies payment information needed to effect a payment to the applicant. This information relates to the administrative processing of the payment, not to the applicant's eligibility for payment under Section 2002. The Department of the Treasury has therefore determined that deficiencies in the material submitted pursuant to Part 2(a)(2) of the November Notice will not prevent an application from being determined to be complying under Part 3 of the November Notice. The Department of the Treasury will contact the applicant in order to obtain any missing or additional payment information under Part 2(a)(2) that the Department of the Treasury needs in order to effect a payment. Any information so requested must be provided to the Department of the Treasury in order for the applicant to receive payment.

Dated: December 12, 2000.

**R. Richard Newcomb,**

*Director, Office of Foreign Assets Control.*

Approved: December 12, 2000.

**Elisabeth A. Bresee,**

*Assistant Secretary (Enforcement), Department of the Treasury.*

[FR Doc. 00–32100 Filed 12–13–00; 10:34 am]

BILLING CODE 4810–25–M

# Corrections

**Federal Register**

Vol. 65, No. 242

Friday, December 15, 2000

This section of the FEDERAL REGISTER contains editorial corrections of previously published Presidential, Rule, Proposed Rule, and Notice documents. These corrections are prepared by the Office of the Federal Register. Agency prepared corrections are issued as signed documents and appear in the appropriate document categories elsewhere in the issue.

## DEPARTMENT OF HEALTH AND HUMAN SERVICES

### National Institutes of Health

### Office of Biotechnology Activities: Recombinant DNA Research: Proposed Actions Under the NIH Guidelines

*Correction*

In notice document 00–31524 beginning on page 77655, in the issue of Tuesday, December 12, 2000, make the following correction:

1. On page 77655, in the third column, under the heading **DATES:**, in the seventh line, '' February 10, 2002'' should read '' February 12, 2001''.

2. On page 77656, in the first column, in the second paragraph, in the last line, after ''URL:'' add ''*http://www.nih.gov/about/director/07122000.htm*.''.

[FR Doc. C0–31524 Filed 12–14–00; 8:45 am]

**BILLING CODE 1505–01–D**

Federal Register

Friday,

December 15, 2000

# Part II

# Postal Service

## 39 CFR Part 111

## Changes to the Domestic Mail Manual to Implement Docket No. R2000–1; Final Rule

**POSTAL SERVICE**

**39 CFR Part 111**

## Changes to the Domestic Mail Manual to Implement Docket No. R2000–1

**AGENCY:** Postal Service.

**ACTION:** Final rule.

**SUMMARY:** This final rule sets forth the Domestic Mail Manual (DMM) standards adopted by the Postal Service to implement the rate, fee, and classification changes for all classes of mail included in the Decision of the Governors of the Postal Service in Postal Rate Commission Docket No. R2000–1.

**EFFECTIVE DATE:** This final rule is effective at 12:01 a.m. on January 7, 2001.

**FOR FURTHER INFORMATION CONTACT:** Sherry Suggs, Office of Mail Preparation and Standards, 703–292–3648.

**SUPPLEMENTARY INFORMATION:** On January 12, 2000, the United States Postal Service, in conformance with sections 3622 and 3623 of the Postal Reorganization Act (39 U.S.C. 101 *et. seq.*), filed a request for a recommended decision by the Postal Rate Commission (PRC) on proposed rate, fee, and classification changes. The PRC designated this filing as Docket No. R2000–1. The PRC issued a notice of filing in Order No. 1279 on January 14, 2000.

On August 29, 2000, the Postal Service published for comment in the **Federal Register** a proposed rule (65 FR 52479) that provided information on the implementation rules for the rate, fee, and classification changes that the Postal Service proposed to adopt if its requested changes in Docket No. R2000–1 were recommended by the PRC and approved by the Governors of the Postal Service.

On November 13, 2000, pursuant to 39 U.S.C. 3624, the PRC issued its Recommended Decision on the Postal Service's Request to the Governors of the Postal Service. The PRC recommendations made revisions to some of the mail classification structure, rates, and fees requested by the Postal Service. Based on an extensive analysis of the PRC's Recommended Decision and deliberation as to its consequences to the Postal Service and its customers, and pursuant to 39 U.S.C. 3625, the Governors acted on the PRC's recommendations on December 4, 2000. The Governors determined to allow the recommended rates and fees and the majority of the classification recommendations to take effect under protest. The Governors expressed disagreement with the Commission's estimate of required revenues in the test year, and returned the Recommended Decision to the Commission for reconsideration of the Postal Services revenue requirement. In a separate decision, the Governors rejected the PRC's recommendation to establish a one-pound flat rate for Priority Mail and ''shell'' classifications for Information Based Indicia Program Mail and Courtesy Envelope Mail. The Governors also rejected the Commission's recommendation to include footnotes in the Standard Mail rate schedules indicating a 3.3 ounce maximum weight and breakpoint weight.

The Board of Governors set an implementation date of January 7, 2001, for the rates, fees, and classifications allowed to take effect. This final rule contains the DMM standards adopted by the Postal Service to implement the Governors' decision. The revised DMM standards will take effect on January 7, 2001.

Part A summarizes the major changes made to the DMM implementing language since publication of the proposed rule (65 FR 52479). This includes changes made because of differences in the Postal Service's proposal and the PRC's recommended decision, changes made in response to the Governors' decisions, and changes made by the Postal Service in response to mailer comments or for other reasons. Part B of this final rule summarizes, by class of mail and special service category, all of the revisions made to current DMM Issue 55 to implement R2000–1. Part C of this final rule contains an analysis of the comments received on the proposed rule and the Postal Service responses. Part D summarizes the changes by DMM module and section. The actual implementing language for the DMM follows at the end of this final rule.

As information, the DMM language in this final rule incorporates revisions to the DMM from four previously published **Federal Register** final rules that also will take effect on January 7, 2001. These final rules are:

1. ''Sack Preparation Changes for Periodicals Nonletter-Size Pieces and Periodicals Prepared on Pallets'' published on July 28, 2000 (65 FR 46361).

2. ''Line-of-Travel Sequencing for Basic Carrier Route Periodicals'' published on July 28, 2000 (65 FR 46363).

3. ''Preparation Changes for Palletized Standard Mail (A) and Bound Printed Matter and for Standard Mail (A) and Standard Mail (B) Claimed at DBMC Rates'' published on August 8, 2000 (65 FR 48385).

4. ''Domestic Mail Manual Changes for Sacking and Palletizing Periodicals Nonletters and Standard Mail (A) Flats, for Traying First-Class Flats, and for Labeling Pallets'' published on August 16, 2000 (65 FR 50054).

Accordingly, the numbering and the language of the DMM sections in this final rule have been synchronized with these other final rules and may not match the numbering and language in current DMM Issue 55.

### A. Major Changes and Additions Other than Rate and Fee Levels Since Publication of the August 29, 2000, Proposed Rule

*1. Express Mail*

The Postal Service has added clarifying language to DMM S500.3.0 to provide for use of electronic option Delivery Confirmation with Priority Mail, Standard Mail parcels, and Package Services mail enclosed in Express Mail drop shipment mailings. Use of electronic option Signature Confirmation also will be permitted for Priority Mail and Package Services mail that is enclosed in Express Mail drop shipments. Retail option Delivery Confirmation and Signature Service is not available for mail enclosed in Express Mail drop shipment mailings.

*2. Priority Mail*

The Postal Service has added clarifying language to DMM S070 to provide for use of electronic option Delivery Confirmation with Standard Mail parcels and Package Services mail enclosed in Priority Mail drop shipment mailings. Use of electronic option Signature Confirmation also will be permitted for Package Services mail that is enclosed in Priority Mail drop shipments. Use of retail option Delivery Confirmation and Signature Confirmation is not permitted with Standard Mail and will not be permitted with Package Services mail enclosed in Priority Mail drop shipments. Delivery Confirmation (either retail or electronic option) is not available for the Priority Mail portion of the drop shipment.

*3. First-Class Mail*

a. Maximum Weight for Automation Heavy Letters

The maximum weight for First-Class Mail heavy letters that may qualify for automation letter rates will be 3.3 ounces (.2063 pound).

b. Barcodes on Automation Flats

DMM C840.3.0 has been revised to allow application of two POSTNET barcodes on the address side of flat-size

automation rate pieces provided certain conditions are met.

*4. Periodicals*

a. DDU Rates for Periodicals Mail Entered under Exceptional Dispatch

Based on the Postal Rate Commission's recommended decision, the final rule will include DMM changes that will provide for DDU rates for Periodicals mail entered under exceptional dispatch. The change will limit DDU rates under exceptional dispatch to zones 1 and 2 and provides a restriction on eligibility to publications with circulation of 25,000 and under.

b. DMM Renumbering

The information contained in DMM E220 in the proposed rule has been renumbered as DMM E217.

c. Maximum Weight for Automation Heavy Letters

The maximum weight for Periodicals heavy letters that may qualify for automation letter rates will be 3.3 ounces (.2063 pound).

d. Barcodes on Automation Flats

DMM C840.3.0 has been revised to allow application of two POSTNET barcodes on the address side of flat-size automation rate pieces provided certain conditions are met.

*5. Standard Mail (formerly Standard Mail (A))*

a. Maximum Weight Limit for Automation Letters

The maximum weight for heavy letters that may qualify for automation letter rates will be 3.3 ounces (.2063 pound).

b. Computation of Postage

Proposed DMM E610.5.7 (formerly DMM E612.4.5) that contained language that mailers must compute postage using both piece and piece/pound rates and pay whichever is higher, was removed. Because all pieces weighing 3.3 ounces or less will pay postage using minimum per piece rates and all pieces weighing more than 3.3 ounces will pay postage using the piece/pound rates, this computation by mailers is not necessary.

c. Barcodes on Automation Flats

DMM C840.3.0 has been revised to allow application of two POSTNET barcodes on the address side of flat-size automation rate pieces provided certain conditions are met.

d. Permissible Use of Electronic Option Delivery Confirmation With Standard Mail Parcels Enclosed in a Priority Mail or Express Mail Drop Shipment

The Postal Service has added clarifying language to DMM S070 and S500.3.0 to provide for use of electronic option Delivery Confirmation with Standard Mail enclosed in Priority Mail Drop Shipment or Express Mail Drop Shipment mailings. Use of retail option Delivery Confirmation is not permitted with Standard Mail. Delivery Confirmation also is not available for the Priority Mail portion of the drop shipment.

*6. Combined Package Services Mail for DSCF and DDU Rates*

a. Overflow Sacks

Based on comments received on the proposed rule, standards were added to DMM E753.2 and 3 to provide for the preparation of 5-digit overflow sacks for Combined Package Services mailings prepared in sacks or on pallets.

b. Clarification of Destination Entry Rate Eligibility

In DMM E753, references to ''destination entry'' were changed to ''DSCF and DDU'' to clarify that DBMC rates are not available under DMM E753 for combined Package Services mailings.

c. Clarification of Minimum Pallet Volumes

Minor changes were made throughout DMM E753 for combined Package Services mail prepared on pallets to clarify that there are two options for meeting minimum pallet volumes. Pallets must contain (1) a minimum of 50 combined parcels and 250 pounds of combined Package Services mail, or (2) 36 inches of mail. In addition, E753.1.1b(2) was amended to clarify that the height of the pallet is excluded when determining the minimum of 36 inches of mail on pallets.

d. Clarification of Postage Payment Method

DMM E753.1.1g was revised and new DMM E753.1.1h added to clarify that postage for combined Package Services mailings must be paid by permit imprint under an approved manifest mailing system agreement.

e. Maximum Height for Pallet Boxes

DMM M041.4.2 has been revised to add a requirement that for mailings prepared in pallet boxes to qualify for the DSCF or DDU rate, the height of the pallet box may not exceed 60 inches (excluding the pallet) as is currently required for Parcel Select DSCF and DDU rate mail (DMM M041.4.2).

*7. Bound Printed Matter*

a. Eligibility of Flat-Size Presorted Bound Printed Matter for DDU Rates

The final implementing standards in DMM E753 permit flat-size Presorted Bound Printed Matter sorted to 5-digit containers or 5-digit bedloaded packages to qualify for DDU rates if the pieces weigh over one pound and are entered at the appropriate destination delivery unit. The Drop Shipment Product must be used to determine the correct destination entry facility for the 5-digit sorted flat-size Bound Printed Matter entered at Presorted rates. If the Drop Shipment Product lists multiple facilities for a single 5-digit ZIP Code, the mailer must inquire about the correct drop site when contacting the DDU to schedule an appointment.

b. Clarification of Package and Sack Minimums

DMM M045, M722, and M723 were amended to include a clarification of the term ''whichever comes first,'' as it is used in the minimum size standards for preparing packages and sacks.

c. Correction of Summary of Changes to Machinable Parcel Sacking Standards

The summary of changes information in the proposed rule incorrectly stated that there were no changes to machinable parcel sack preparation other than eliminating the 1,000 cubic inch sack sortation option. The summary of changes in this final rule correctly shows that machinable parcel preparation is revised to add the ''whichever comes first'' criterion to the minimum sack requirements, and to allow mailers the option of preparing an ASF sack when such pieces are entered at the DBMC rates.

d. Clarification of Carrier Route Rate Eligibility

DMM E712.4.3, which was contained in the proposed rule, is deleted in this final rule. This section was erroneously included in the proposed rule and contained Carrier Route rate eligibility standards that conflicted with E712.2.0.

e. Clarification of Packaging Standards in M020

DMM M020 has been clarified to (1) show that mixed ADC packages may contain fewer than two physical pieces, (2) clarify that each physical package of Bound Printed Matter must always contain at least two pieces except for mixed ADC packages and, under the conditions described in that section,

packages of Carrier Route mail prepared in sacks.

f. Revision of Maximum Individual Piece Weight for Package Preparation

The proposed rule preparation requirements for sacked mailings of irregular parcels stated that pieces weighing 10 pounds or less must be packaged prior to sacking. However, for Presorted rate irregular parcels, the minimum package size was proposed to be and is stated in this final rule to be 10 pieces or 10 pounds, whichever comes first, with a stipulation that each package must contain at least 2 pieces. Under this scenario, a single piece weighing 10 pounds would meet the minimum packaging standard and would also be required to meet the standard that each package contain at least 2 pieces. The standard requiring at least 2 pieces in each physical package would, for a 10-pound mailpiece, actually result in a minimum package size of 20 pounds rather than 10 pounds.

To eliminate this discrepancy, the cut-off weight for preparing irregular parcels in packages in DMM M722 has been changed from ''weighing 10 pounds or less'' to ''weighing less than 10 pounds.''

To keep the packaging requirements parallel, this change also has been made for carrier route irregular parcels in sacks (DMM M723) and for all packages on pallets (DMM M045).

g. Revised Sacking Criteria for Presorted Irregular Parcels Weighing 10 or More Pounds

DMM M722.4.0, Required Preparation—Irregular Parcels Weighing 10 Pounds or More, has been revised to remove the sacking criterion of 10 or more pieces. The proposed rule stated that irregular parcels each weighing over 10 pounds were to be sacked whenever there were at least 10 pieces or 20 pounds, whichever occurs first, for a presort destination. Under the stated ''whichever occurs first'' rule, pieces that weigh over 2 pounds would always be sacked under the minimum 20-pound rule. Since this section pertains to only pieces that individually weigh 10 or more pounds, the option to sack based on the criterion of at least 10 pieces for a presort destination would never be used and it is therefore deleted.

h. Exception to Packaging for Presorted Rate Irregular Parcels in 5-Digit Sacks

An exception has been added to the packaging requirement in DMM M722 for Presorted rate irregular parcels that are prepared in 5-digit sacks. Mailers of Presorted rate irregular parcels prepared in 5-digit sacks, may at their option, prepare such pieces loose in sacks without physical packaging provided the number of pieces in the sack meets the minimum package size and sack size requirements and the pieces in the 5-digit sack(s) are individually wrapped or enveloped.

i. Clarification of Mixed ADC Sack Preparation to Qualify for DBMC Rates

Mailers who opt to claim the DBMC rates for mail in mixed ADC sacks are required to prepare separate mixed ADC sacks for pieces eligible for and claimed at the DBMC rate and for pieces not claimed at the DBMC rate (one set of mixed ADC sacks containing packages qualifying for DBMC rates and one set of mixed ADC sacks for packages that do not qualify for DBMC rates). For this purpose, DMM E650 and E752 have been clarified to specify that mailers must assign ADC packages to the respective qualifying or nonqualifying mixed ADC sacks based on the ''label to'' ZIP code for the ADC (DMM L804). For mixed ADC packages, separate mixed ADC packages must be prepared based on the individual addresses on the pieces. That is, a mixed ADC package(s) for pieces within the ASF or BMC entry point must be prepared and a separate mixed ADC package(s) for pieces outside the entry ASF or DBMC area must be prepared (using either Exhibit E650.5.1 or Exhibit E751.1.3).

j. Correction of Eligibility of Presorted Rate Machinable Parcels for DSCF Rates

DMM E752.3.3 has been amended to remove the requirement that was incorrectly published in the proposed rule that stated mailers of palletized machinable parcels at Presorted rates would be required to determine if the 5-digit facility was able to handle pallets using the Drop Shipment Product maintained by the National Customer Support Center (NCSC) and that pallets could not be prepared if the 5-digit facility was unable to handle pallets.

k. Maximum Height for Pallet Boxes at DSCF and DDU Rates

DMM M041.4.2 has been revised to add a requirement that for mailings prepared in pallet boxes to qualify for the DSCF or DDU rate, the height of the pallet box may not exceed 60 inches (excluding the pallet) as is currently required for Parcel Select DSCF and DDU rate mail (DMM M041.4.2).

*8. Parcel Post*

Some of the standards for Parcel Post have been reorganized for clarity since the publication of the proposed rule. Specifically, the criteria for nonmachinable parcels for purposes of applicability of the nonmachinable surcharges for inter-BMC, Intra-BMC, and DBMC rate parcels have been moved from E711 to C700.

There have been no substantive changes to the standards for Parcel Post since publication of the proposed rule.

*9. Media Mail and Library Mail*

DMM M045.3.6 has been corrected to show that pallets of Presorted Media Mail and Presorted Library Mail must show ''PSVC'' on Line 2 to indicate the class of mail.

*10. Special Services*

a. Business Reply Mail

Effective November 5, 2000, the Postal Service completely rewrote DMM standards for business reply mail (see Postal Bulletin 22035 (10–19–00), available via www.usps.com). This rewrite was done for clarity and consistency. Therefore, standards for business reply mail in this final rule have been reorganized to reflect the new structure of DMM units E150, P014, R900, and S922.

A provision in the DMCS that required permit holders to maintain an advance deposit account solely for the use of business reply mail has been deleted. Therefore, DMM S922.3.3 is revised to show that permit holders will be able to maintain a single advance deposit account from which multiple items can be deducted (e.g., BRM, QBRM, merchandise return service, incoming shortpaid mail, address correction notices, etc.). If permit holders request separation of charges, then they must pay an annual accounting fee for each separation, as appropriate.

b. Insurance

DMM S913.1.5 was rewritten to clarify the additional services that can be added to insurance.

c. Registered Mail

A sentence was added to the DMM to clarify that registered items receive registered treatment while they are being forwarded or returned (DMM F010.5.4e). DMM S911.1.5 was rewritten to clarify the additional services that can be added to registered mail.

d. Return Receipt

Editorial changes were made to DMM S915.1.2 to clarify that certain special services can be combined with return receipt only at the time of mailing. DMM S915.1.7 was revised to allow Delivery Confirmation and Signature Confirmation services to be added as

additional services, provided that one of the prerequisite services in DMM S915.1.2 is purchased first. DMM S915.2.2 was amended to remove instructions related to activation of the signature capture process. DMM S915.4.2 was amended to clarify procedures for requesting delivery information.

e. Return Receipt for Merchandise

Proposed DMM S917.1.2 is revised to remove First-Class Mail as eligible matter. Return receipt for merchandise service is not currently an option for First-Class Mail that is 13 ounces or less; the reference to First-Class Mail was included in the proposed rule in error. Return receipt for merchandise service is available only for Priority Mail, Standard Mail parcels that are subject to the residual shape surcharge, and Package Services.

f. Signature Confirmation

Minor changes were made to the DMM language to clarify how delivery information can be retrieved and to clarify requirements for the package identification code. In addition, mailers who have previously received certification for label printing under the Delivery Confirmation program are not required to obtain any additional certification to use Signature Confirmation (DMM S919.3.3). Standards were added to allow mailers to use an integrated barcode to combine Delivery Confirmation or Signature Confirmation and insurance services (DMM S919.1.7, 3.4, and 4.0). Waiver of signature is not available when Signature Confirmation is combined with other special services (DMM S919.1.10). DMM C850.1.4 was amended to include information about concatenated and integrated barcodes with Signature Confirmation service. Language was added to F020.3.7 to show that pieces with Signature Confirmation are forwarded without payment of additional special service fees. P014.2.34f was amended to add language for refunds for Signature Confirmation service. S913.2.5 was amended to add information about integrated barcodes with Signature Confirmation and insurance.

g. Mailing List Services

DMM A910.2.2 was revised to show that the minimum fee ($7.50) for correcting a mailing list applies to lists with fewer than 30 names or addresses. This revision was omitted from the proposed rule.

h. Merchandise Return Service

DMM S923.3.4 was amended to clarify that a separate accounting fee must be paid for each separate withdrawal (billing) requested by a permit holder. This change is consistent with current standards for business reply mail.

i. Payment Period for Fee Renewals

On December 14, 2000, the Postal Service revised current DMM sections E100.4.1, E612.4.7, E630.1.5, S922.2.3, S922.3.3, S923.3.1, and S924.3.1 to allow customers to renew fee payments any time during the last 60 days of the current period (see Postal Bulletin 22039 (12–14–00)). Affected sections in this final rule have been revised accordingly to be consistent with the 60-day payment period.

**B. Summary by Class of Mail and Special Service of All DMM Revisions for R2000–1**

*1. Express Mail*

a. Express Mail Rate Highlights

Overall, Express Mail rates will increase by an average of 3.6%. Moderate increases will occur for all Express Mail rates, except for a $0.30 decrease in the ½-pound rates for Custom Designed Service and for Next Day and Second Day Post Office to Post Office Service. The fee for pickup service will increase from $8.25 to $10.25 per occurrence. The fee for delivery stops (Custom Designed Service only) will increase from $8.25 to $10.25. The fee for every $100 increment of additional insurance desired above the standard $500 of coverage will increase from $0.95 to $1.00.

b. Express Mail Rate Structure

There are no changes to the rate structure of Express Mail. Same Day Airport Service is still suspended.

c. Express Mail Preparation Changes

There are no changes to mail preparation requirements for Express Mail.

*2. Priority Mail*

a. Priority Mail Rate Highlights

Overall, Priority Mail rates will increase by an average of 16%. The fee for pickup service will increase from $8.25 to $10.25 per occurrence.

b. Priority Mail Rate Structure

(1) One Pound or Less Priority Mail Rate

A unique Priority Mail rate has been implemented for pieces weighing 1 pound or less. Prior to this change all Priority Mail pieces weighing 2 pounds or less were charged the 2-pound rate. Mail that is placed in a Priority Mail flat-rate envelope will continue to be charged the 2-pound rate regardless of the actual weight of the piece.

(2) Keys and Identification Devices

Keys and identification devices that weigh more than 13 ounces but not more than 1 pound will be eligible for the new 1-pound Priority Mail rate plus the fee. The fee for keys and identification devices will increase from $0.30 to $0.35.

c. Priority Mail Preparation Changes

There are no changes to mail preparation requirements for Priority Mail.

*3. First-Class Mail*

a. First-Class Mail Rate Highlights

Overall, First-Class Mail rates will increase by an average of 1.8%. The single-piece first-ounce letter rate increases by only one cent, from $0.33 to $0.34, and the rate for each additional ounce reduces by one cent from $0.22 to $0.21. The single-piece card rate remains at $0.20.

The first-ounce letter rate for Qualified Business Reply Mail (QBRM) increases from $0.30 to $0.31, and the card rate for QBRM reduces from $0.18 to $0.17.

The nonstandard surcharge for single-piece rate mail weighing one ounce or less will remain the same at $0.11. The nonstandard surcharge for Presorted rate and Automation rate pieces will remain the same at $0.05.

The basic automation flat rate will increase from $0.30 to $0.31 for the first ounce. The combined 3/5-digit rate category for automation flats will be eliminated. New and separate automated rate categories for 3-digit automation flats and for 5-digit automation flats will be implemented. The annual presort mailing fee will increase from $100 to $125.

b. First-Class Mail Rate Structure

The current automation flats 3/5-digit rate will be split into two separate rates: a 3-digit automation rate and a 5-digit automation rate.

c. First-Class Mail Preparation Changes

(1) Maximum Weight Limit for Automation Heavy Letters (C810.2.3)

The maximum weight for heavy letters that may qualify for automation letter rates also will be 3.3 ounces (.2063 pound).

(2) Automation Flats (DMM M011, M030, M033, M820, M910)

The Postal Service will change the standards for the preparation of 5-digit packages and 5-digit trays of automation flats under DMM 820 from required levels of sortation to optional levels of sortation. This is supported by the new rate structure that provides separate 5-digit and 3-digit rates for automation flats. All other current mail preparation requirements will remain the same.

The Postal Service will also add a new tray-based presort option for automation flats. When using this option, mailers will not need to prepare automation flats in 5-digit, 3-digit, ADC, and mixed ADC packages. Instead, mailers will prepare flat trays to 5-digit (optional), 3-digit, and ADC destinations whenever there are 90 or more pieces to a presort destination, and place remaining pieces in mixed ADC tray(s) that have no minimum tray quantity. Ninety is the average number of pieces that fills a flat tray up to the bottom of the handholds when at least a single stack of mail is lying flat on the bottom of the tray. When there are 90 or more pieces for a presort destination (other than mixed ADC), mailers will be required to physically fill flat tray(s) for that destination and will be allowed one less-than-full tray or one overflow tray per 5-digit, 3-digit, and ADC destination. Preparation of 5-digit trays also will be optional under this tray-based preparation option. Rates will be based on the sortation level of the tray to which a piece is sorted. Mailers choosing to prepare their mail using this option will not be eligible to prepare their mail as outlined in new M910 which will also go into effect when the rates resulting from the R2000–1 rate case are implemented. (M910 will permit co-traying of packages from automation rate mailings and packages from Presorted rate mailings that are part of the same mailing job and meet other criteria.)

(3) Tray Containers (DMM M033)

For clarification, new information has been added to M033.1.2 to show that the lids required to be placed on First-Class Mail flat trays must be placed on the tray green side up prior to strapping under M033.1.5b.

(4) Application of Two POSTNET Barcodes for Automation Flats (DMM C840.3.0)

Mailers have requested the ability to qualify flat-size mailpieces that bear two POSTNET barcodes for the automation flat rates. Mailers indicate that a mailpiece bearing a barcode that is not CASS-certified can in some instances be upgraded to contain a second delivery point barcode that meets the CASS- or MASS-certification criterion for eligibility for automation flat rates if it is subsequently processed through an MLOCR or other barcoding system.

However, unlike automated processing of letter mail, FSM barcode readers will read the first barcode it recognizes. Therefore, which barcode is read depends on the orientation of the mailpiece when fed through the flat sorter and the location of the barcodes on the mailpiece.

A cooperative effort between the Postal Service and MLOCR vendors led to the development of standards that will allow mailers to submit mailpieces that bear two POSTNET barcodes to qualify for automation flat-rates. The Postal Service believes these standards meet both the interest of the mailers in qualifying for the most advantageous postage rate discounts at the lowest possible mailing costs and the interest of the Postal Service to generate more barcoded flat-size mailpieces. In addition, MLOCR vendors plan to offer FASTforward[sm] to their clients in the future to meet the First-Class Mail requirement for move update in DMM E140.

The Postal Service will allow the application of two POSTNET barcodes on the addressed side of flat-size automation rate pieces providing certain requirements are met. The presence of two POSTNET barcodes on a flat-size mailpiece will be permitted only when the first barcode is applied in the address block and that barcode is either a 5-digit barcode or it is a ZIP+4 or delivery point barcode that is not CASS-certified. The second barcode must be a delivery point barcode and must be CASS- or MASS-certified. It is preferred, but not required, that the second barcode be applied in the lower right area of the mailpiece parallel to and in the same direction as the delivery address. A greater than one-inch separation between the two barcodes is required. The second POSTNET barcode must not be placed near the return address. A no-spray clear zone of at least one inch below the return address is required. This is because OCRs on Postal Service flat sorting machines use the location of the POSTNET barcode to determine the location of the destination address block. If a POSTNET barcode is applied close to the return address and is scanned first, it is highly probable that the OCR will encode the return address and inadvertently return the mailpiece to the sender. The preferred location of the lower right area of the mailpiece will increase the likelihood that the CASS- or MASS-certified delivery point barcode is the first one read by the FSMs.

The application of two POSTNET barcodes is a temporary solution and may be revised subsequent to implementation of planet codes and/or testing and implementation of other options. At that time, MLOCR vendors and or mailers will be given a 90-day transition period to comply with the new requirements.

*4. Periodicals*

a. Periodicals Rate Highlights

The overall proposed average rate increase for Periodicals decreased from 12.7% to 9.5%. Outside-County Periodicals will have an average increase of 9.5% while Within-County Periodicals will have an average increase of 6.8%. Regular, Nonprofit and Classroom will have average increases of 9.9%, 7.2% and 9.6%, respectively.

Two of the preferred subclasses (Nonprofit and Classroom) will be combined with the Regular subclass to form an Outside-County subclass with one set of rates. Nonprofit and Classroom publications will receive a 5% discount on total Outside-County postage, excluding the postage for advertising pounds. The Within-County subclass will remain a separate subclass with a separate set of rates.

The nonadvertising percentage per piece discount, the delivery unit (Outside-County and In-County) per piece discounts, and the SCF per piece discount will increase. The Outside-County (except delivery unit, which decreases), Science-of-Agriculture (except delivery unit, which decreases), and In-County pound rates will increase along with all per piece rates for both subclasses (Outside-County and Within County). See DMM R200 for individual rates and discounts.

The fee for original entry will increase from $305 to $350. The re-entry and newsagents' fees will decrease from $50 to $40. The fee for additional entry will remain unchanged at $50.

DMM changes will provide for DDU rates for Periodicals entered under exceptional dispatch authorizations. The change will limit DDU rates under exceptional dispatch to mail destined to zones 1 and 2 and will generally restrict eligibility to publications with circulation of 25,000 and under.

b. Periodicals Rate Structure

Regular, Nonprofit, and Classroom publications will use the same Outside-County rate schedule. Nonprofit and

Classroom publications will receive a 5% discount on total Outside-County postage, excluding the postage for advertising pounds. The 5% discount does not apply to commingled nonsubscriber copies in excess of the 10% allowance provided under DMM E215. In-County rates will remain a separate rate schedule.

c. Periodicals Mail Preparation Changes

(1) Bundles on Pallets

The current DMM describes a ''bundle'' as a group of packages secured together as a unit that equates to a sack. The current DMM provides both for preparation of packages on pallets under DMM M045.2.0 and for preparation of bundles on pallets under DMM M045.3.0. The Postal Service is not aware of any mailers that currently opt to prepare bundles on pallets. Accordingly, the Postal Service will delete the option to prepare bundles on pallets under current DMM M045.3.0. The provisions for preparing packages on pallets will remain in DMM M045.2.0.

(2) Maximum Weight Limit for Automation Heavy Letters (C810.2.3)

The maximum weight for heavy letters that may qualify for automation letter rates also will be 3.3 ounces (.2063 pound).

(3) Other Rulemakings

Mailers are reminded that three final rule **Federal Register** notices have previously been published that set forth required and optional preparation requirements for Periodicals that also will be effective on January 7, 2001. These are: (1) ''Sack Preparation Changes for Periodicals Nonletter-Size Pieces and Periodicals Prepared on Pallets'' published on July 28, 2000 (65 FR 46361), (2) ''Line-of-Travel Sequencing for Basic Carrier Route Periodicals'' published on July 28, 2000 (65 FR 46363), and (3) ''Domestic Mail Manual Changes for Sacking and Palletizing Periodicals Nonletters and Standard Mail (A) Flats, for Traying First-Class Flats, and for Labeling Pallets'' published August 16, 2000 (65 FR 50054). In addition, a final rule has been published concerning ''Sack Preparation Changes for Periodicals Nonletter-Size Mailing Jobs that Include Automation Flat Rate and Presorted Rate Mailings.'' This final rule requires, effective January 7, 2001, use of the co-sacking preparation method in DMM M910 for Periodicals nonletter-size mailing jobs that include both an automation flats mailing and a Presorted flats mailing. Information concerning optional use of DMM M910 and its associated preparation criteria was published in Postal Bulletin 22036 (11–2–00). Information concerning required use of DMM M910 by Periodicals mailers will be published in Postal Bulletin 22039 (12–14–00) as ''Preparation Changes for Periodicals Nonletter-Size Mailing Jobs.''

*5. Standard Mail (Formerly Standard Mail (A))*

a. Standard Mail Rate Highlights

Regular rates will increase by an average of 8.8%. Rates for commercial Enhanced Carrier Route (ECR) mail will increase by an average of 4.5%. Rates for Nonprofit mail will increase by an average of 4.8%. Rates for Nonprofit Enhanced Carrier Route will increase by an average of 18.3%.

Discounts for destination entry rate mail (DBMC, DSCF, and DDU) have increased. The annual presort mailing fee increases from $100 to $125.

b. Standard Mail Rate Structure

All Standard Mail letters and non-letters are subject to a weight limit of 3.3 ounces (.2063 pound) for the minimum per piece rate.

A new machinable parcel barcoded discount of $0.03 will apply to Standard Mail machinable parcels that are subject to the residual shape surcharge and that meet other preparation requirements. This machinable parcel barcoded discount is available only for the Regular and Nonprofit Standard Mail subclasses (it will not be available for pieces mailed at the Enhanced Carrier Route and Nonprofit Enhanced Carrier Route subclasses).

There are two different residual shape surcharges: Enhanced Carrier Route and Nonprofit Enhanced Carrier Route mail have a residual shape surcharge of $0.15, and Regular and Nonprofit mail have a residual shape surcharge of $0.18.

Return receipt for merchandise, bulk insurance, and electronic option Delivery Confirmation are available for Standard Mail parcels that are subject to the residual shape surcharge.

c. Standard Mail Preparation Changes

(1) Name Change and DMM Restructuring

The name of the mail class ''Standard Mail (A)'' will change to ''Standard Mail.'' Throughout this final rule, ''Standard Mail'' is used consistently in the DMM text to indicate the class formerly known as ''Standard Mail (A).'' For brevity, not all DMM sections for which only name changes apply were reproduced in this final rule. This change will, however, be implemented throughout all of DMM Issue 56, which will transmit the final implementing rules for R2000–1.

DMM sections C600, D600, E600, M600, P600, and R600 now contain standards for only Standard Mail. Matter in these sections that formerly contained standards for Package Services mail have been moved into new sections under C700, D700, E700, M700, P700, and R700, respectively. (Former P700, which contains information on special postage payment systems, is renumbered as P900.)

Matter pertaining only to Standard Mail in former E611 and E612 is consolidated and reorganized into new E610. DMM E620 and E630 are reorganized so that E620 pertains to Presorted rate Standard Mail and E630 pertains to Enhanced Carrier Route Standard Mail.

(2) Sack and Pallet Labels (DMM M031, M032, M045, M600)

Currently, the contents line of sack and pallet labels for irregular parcel and machinable parcel mailings must show ''STD A'' or ''STD B'' as applicable for the class being mailed. Because of the name changes of ''Standard Mail (A)'' to ''Standard Mail'' and of ''Standard Mail (B)'' to ''Package Services,'' the use of ''STD A'' on ''Standard Mail'' sack and pallet labels for irregular parcel and machinable parcel mailings is changed to ''STD'' (Package Services labels will use ''PSVC'').

(3) Dimensions for Machinable Parcels (DMM C050)

The minimum dimensions for a machinable parcel in DMM C050.4.1a are changed to not less than 6 inches long, 3 inches high, ¼ inch thick, and 6 ounces in weight. (A mailpiece exactly ¼ inch thick is subject to the 3½-inch height minimum under C010.) Some parcels may be successfully processed on BMC parcel sorters although they do not conform to the new machinability standards in DMM C050.4.1. If this is the case, a BMC plant manager may authorize a mailer to enter such parcels as machinable parcels if the parcels are tested on BMC parcel sorters and prove to be machinable. Such an authorization will apply only to mail that is both entered at a post office within the service area of the authorizing BMC area and is for delivery to an address within the service area of that BMC. These changes also apply to Package Services mail.

(4) Preparation of Bundles (DMM M045, M600)

The current DMM describes a ''bundle'' as a group of packages secured

together as a unit that equates to a sack. Because the Postal Service is not aware of any mailers that currently opt to prepare bundles on pallets, the provision in M045.3.0 that contains an option to prepare bundles on pallets is removed. The provisions for preparing packages on pallets will remain in DMM M045.2.0.

The current DMM also provides for preparation of bedloaded bundles of Presorted and Carrier Route rate mail under DMM M610.6.0 and M620.6.0, respectively. Such preparation requires Rates and Classification Service Center (RCSC) authorization. The records of the Postal Service currently indicate that there are no mailers authorized to prepare bedloaded bundles in the manner described in the DMM. Because of this, and because bedloaded bundles are generally not cost-efficient for the Postal Service to handle and process, the Postal Service is removing the options to prepare bedloaded bundles under DMM M610.6.0 and M620.6.0.

(5) Machinable Parcel Barcoded Discount (DMM C850, E610, E620, P600)

The new machinable parcel barcoded discount of $0.03 will apply to machinable parcels (as defined in DMM C050) for which the residual shape surcharge (RSS) surcharge is paid and that bear a correct, readable 5-digit barcode under C850 for the ZIP Code shown in the delivery address and are prepared as machinable parcels under M045 or M610. Machinable parcels prepared in 5-digit sacks or on 5-digit pallets entered at DSCF rates may qualify for the barcoded discount even though such pieces will not be processed using BMC barcode scanning equipment. Otherwise, rates for 5-digit sorted machinable parcels entered at DSCF rates could be higher than for BMC sorted machinable parcels that were entered at DBMC rates and which also qualified for the barcoded discount. Machinable parcels entered at DBMC rates may claim the machinable parcel barcoded discount only if they are entered at a BMC. An exception is that properly prepared machinable pieces of DBMC rate mail entered at the Phoenix, Arizona, ASF may claim the barcoded discount because that facility uses barcode scanning equipment. The machinable parcel barcoded discount is not available for pieces mailed at the Enhanced Carrier Route or Nonprofit Enhanced Carrier Route subclasses.

If all pieces in a mailing are eligible for the machinable parcel barcoded discount under E610 and E620, then the mailing may be paid with meter stamps, permit imprint, or precanceled stamps under the applicable standards. If fewer than 100 percent of the pieces in the mailing are eligible for the machinable parcel barcoded discount, then payment with precanceled stamps is not permitted; use of metered postage is permissible only if exact postage is affixed to each piece in the mailing; and use of permit imprints is permitted only under a manifest mailing system (P910).

(6) Special Services With Standard Mail (DMM E610, P600)

Standard Mail that is subject to the residual shape surcharge (pieces prepared as parcels or that are not letter-size or flat-size as defined in DMM C050) may receive the following additional special services upon payment of the appropriate fees: bulk insurance, return receipt for merchandise, and electronic option Delivery Confirmation. Other Standard Mail is not eligible for any special services. Mail prepared with detached address labels under A060 and mail using Bulk Parcel Return Service (BPRS) also are not eligible for any special services.

Mailpieces for which one or more of these special services are requested must bear a return address under A010 and must bear an ancillary service endorsement that results in return of the mailpiece to the sender if undeliverable as addressed (Address Service Requested, Forwarding Service Requested, or Return Service Requested).

Mailings for which bulk insurance is requested must pay postage and fees through a manifest mailing system (P910).

For electronic option Delivery Confirmation, the following postage payment requirements apply. If electronic option Delivery Confirmation is requested for all the pieces in the mailing and the mailing consists of pieces of identical weight, then postage may be paid with metered postage or permit imprints under the existing standards in P600.2.0 and P600.3.0 (as restructured in this final rule). However, if Delivery Confirmation is not requested for all pieces in the mailing, or if the pieces are not of identical weight, then either the exact metered postage must be affixed to each piece or a manifest mailing system must be used for permit imprint mail under P910. Precanceled stamps may not be used for postage payment on pieces with Delivery Confirmation (see DMM S918.1.5).

If return receipt for merchandise is requested for all the pieces in the mailing and the mailing consists of pieces of identical weight, then postage must be paid with metered postage or permit imprints under the applicable standards in DMM P600.2.0 and P600.3.0. If return receipt for merchandise is not requested for all of the pieces in the mailing, or if the pieces are not identical weight, then either the exact metered postage must be affixed to each piece, or a manifest mailing system must be used for permit imprint mail under P910. Precanceled stamps are not permitted for use with return receipt for merchandise.

(7) Maximum Weight Limit for Automation Heavy Letters (DMM C810.2.3)

The maximum weight for heavy letters that may qualify for automation letter rates also will be 3.3 ounces (.2063 pound).

(8) Barcodes on Automation Flats (DMM C840.3.0)

DMM C840.3.0 has been revised to allow application of two POSTNET barcodes on the address side of flat-size automation rate pieces provided certain conditions are met.

(9) Permissible Use of Electronic Option Delivery Confirmation With Standard Mail Parcels Enclosed in an Express Mail or Priority Mail Drop Shipment (DMM S070 and S500.3.0)

DMM S070 and S500.3.0 are amended to provide for use of electronic Delivery Confirmation with Standard Mail parcels enclosed in Priority Mail Drop Shipment or Express Mail Drop Shipment mailings.

*6. Package Services (Formerly Standard Mail (B))—General*

a. Name Change and DMM Restructuring

The name of this mail class will change from ''Standard Mail (B)'' to ''Package Services.'' Package Services includes Parcel Post (including Parcel Select), Bound Printed Matter, Media Mail (formerly Special Standard Mail), and Library Mail.

The standards in current DMM sections C600, D600, M600, E600, P600, and R600 that pertain to Package Services have been moved to new sections under DMM C700, D700, E700, M700, P700, and R700. Former P700, which contains information on special postage payment systems, is renumbered as P900.

The standards for Package Services contained in current DMM E611 and E613 are consolidated and reorganized into new E710. Current DMM E630 and E650, which contain eligibility standards for Package Services, are moved into new DMM E700. Each of the

four subclasses of Package Services mail has its own eligibility sections: DMM E711 for Parcel Post; DMM E712 for Bound Printed Matter; DMM E713 for Media Mail (formerly Special Standard Mail); and DMM E714 for Library Mail. Information pertaining to eligibility of Package Services mail for destination entry rates is moved to DMM E750. Current DMM M630 is moved and reorganized into new DMM M710 for Parcel Post, DMM M720 for Bound Printed Matter, DMM M730 for Media Mail, and DMM M740 for Library Mail.

b. Combining Different Subclasses of Package Services to Qualify for DSCF and DDU Rates

New provisions are added in DMM E753 that allow mailers to combine different subclasses of Package Services machinable, irregular, and nonmachinable parcels in the same 5-digit sack or on the same 5-digit pallet to qualify for DSCF and DDU rates. For sack preparation, 10 or more parcels of any combination of Package Services subclasses, except for mail at Carrier Route Bound Printed Matter rates, may be placed in the same 5-digit sack and entered at destination SCFs or at destination delivery units. For pallet preparation, 5-digit pallets that contain either 50 pieces and 250 pounds or that contain at least 36 inches of Package Services parcels (any combination of subclasses, except mail at Carrier Route Bound Printed Matter rates) may be prepared and entered at destination SCFs or at destination delivery units. Any Parcel Post pieces and any Presorted Bound Printed Matter in such sacks or on such pallets will be eligible for the appropriate DSCF or DDU rate provided all other eligibility requirements for the applicable destination entry rate are met. Media Mail and Library Mail pieces are subject to their respective single-piece or 5-digit rates depending upon whether the 500-piece minimum quantity requirement for the 5-digit rates is met for each subclass. Mailers must request authorization to use this preparation method and pay postage using permit imprints under a manifest mailing system agreement. See E753 for a full description of the requirements and rate applicability.

*7. Parcel Post*

a. Parcel Post Rate Highlights

Parcel Post rates will increase by an average of 2.7%. The nonmachinable surcharge for Inter-BMC Parcel Post will increase from $1.65 to $2.00 per parcel. The Parcel Post Origin BMC Presort and BMC Presort discounts will increase from $0.57 to $0.90 per piece and from $0.22 to $0.23 per piece, respectively. The barcoded discount for qualifying Parcel Post (including Parcel Select) machinable parcels will remain at $0.03 per piece. The annual destination entry fee for Parcel Select will increase from $100 to $125.

b. Parcel Post Rate Structure

Pieces weighing less than 16 ounces are now eligible for Parcel Post (including Parcel Select) rates. A one-pound rate is added. The rates for a piece weighing one pound or less and the rates for a piece weighing more than one pound but not more than 2 pounds are the same. A $1.35 nonmachinable surcharge for Intra-BMC Parcel Post and a $1.45 nonmachinable surcharge for DBMC Parcel Select are added.

c. Parcel Post Mail Preparation Changes

(1) Rate Markings (DMM M012 and M710)

There are no changes to the marking requirements for Parcel Post and Parcel Select.

(2) Sack and Pallet Labels (DMM M031, M032, M045, M710)

The abbreviation ''STD'' or ''STD B'' on the contents line of sack and pallet labels for Parcel Post (including Parcel Select) is changed to ''PSVC'' (an abbreviation for Package Services). Labels for 5-digit sacks and pallets prepared to qualify for Parcel Select DSCF and DDU rates are revised to add the processing category ''PARCELS'' to the contents line to read ''PSVC PARCELS 5D.'' For containers of combined Package Services parcels, line 2 will also read ''PSVC PARCELS 5D.''

(3) Dimensions for Machinable Parcels (DMM C050)

The minimum dimensions for a machinable parcel in DMM C050.4.1a are changed to not less than 6 inches long, 3 inches high, ¼ inch thick, and 6 ounces in weight. (A mailpiece exactly ¼ inch thick is subject to the 3½-inch height minimum under C010.) (The previous minimum weight was 8 ounces unless certain other conditions were met.) Some parcels may be successfully processed on BMC parcel sorters although they do not conform to the machinability standards in new DMM C050.4.1. If this is the case, a BMC plant manager may authorize a mailer to enter such parcels as machinable parcels if the parcels are tested on BMC parcel sorters and prove to be machinable. Such an authorization applies only to mail that is both entered at a post office within the authorizing BMC's service area and is for delivery to an address within that BMC's service area. These changes also apply to Standard Mail.

(4) Machinable Parcel Preparation Requirements (DMM M045 and M710)

The rules for sacking and palletizing Parcel Post (including Parcel Select) machinable parcels are clarified to point out that they are optional preparation methods for Parcel Post. In addition, the sacking rules are modified to delete the 1,000 cubic inch option for preparing sacks of machinable parcels. If Parcel Post mailers choose to sack under the machinable parcel preparation standards, sacks for a 5-digit, ASF, or BMC destination have a minimum volume requirement of 10 pieces or 20 pounds.

(5) Postage Payment (P700)

P700 is clarified to indicate that precanceled stamps must not be used for postage payment of any Parcel Post or Parcel Select mail, including matter at single-piece rates.

*8. Bound Printed Matter*

a. Bound Printed Matter Rate Highlights

The Postal Service has calculated that Bound Printed Matter (BPM) rates will increase by an average of 9.8%. New destination entry discounts for Presorted rate and Carrier Route rate mailings of Bound Printed Matter are available to encourage the deposit of mail at the destination BMC, SCF, or delivery unit. There is an annual destination entry mailing fee for mail entered at destination entry rates of $125. The barcoded discount for qualifying Presorted Bound Printed Matter machinable parcels will remain at $0.03 per piece.

b. Bound Printed Matter Rate Structure

The local zone rate category has been eliminated for Bound Printed Matter. Destination entry rates for Presorted and Carrier Route Bound Printed Matter entered at destination BMCs, SCFs, and delivery units are provided. To qualify for destination entry rates mailers must pay the annual destination entry mailing fee described above and meet the preparation requirements in DMM E752 that are summarized below. There are no destination entry rates for single-piece Bound Printed Matter.

Another major change is that pieces weighing less than 16 ounces are eligible for Bound Printed Matter rates; however, there are no rate categories for pieces less than 1 pound for single-piece, Presorted, and Carrier Route mail. Therefore, single-piece Bound Printed Matter that weighs less than 1 pound will be charged the 1-pound rate (which is the same as the 1.5-pound rate), and

Presorted and Carrier Route Bound Printed Matter that weighs less than 1 pound will be charged the full 1-pound rate, plus the applicable per piece charge.

c. Bound Printed Matter Mail Preparation Changes

(1) Rate Markings (DMM M012 and M720)

There are two changes to the marking requirements for Bound Printed Matter. The first allows mailers to use the abbreviation ''BPM'' as the basic (subclass) marking that must appear in the postage area on each piece. The second prohibits mailers from using the ''Presorted Standard'' (or ''PRSRT STD'') marking on Presorted and Carrier Route Bound Printed Matter after a 1-year grace period. Because of the renaming of Standard Mail (B) to Package Services, ''Standard'' and ''STD'' are no longer applicable as class of mail descriptions for Bound Printed Matter. Mailers will have until January 1, 2002 to discontinue use of the ''Presorted Standard'' (or ''PRSRT STD'') marking.

(2) Sack and Pallet Labels (DMM M031, M032, M045, M700)

The abbreviations ''STD'' or ''STD B'' on the contents line of sack and pallet labels for Bound Printed Matter are changed to ''PSVC'' (an abbreviation for Package Services).

(3) Address Matching Requirements for Presorted Bound Printed Matter (DMM E712)

A new requirement is added that all 5-digit ZIP Codes included in addresses on pieces claimed at Presorted Bound Printed Matter rates must be verified and corrected within 12 months before the mailing date using a USPS-approved method. The mailer must certify on the postage statement that this standard has been met when the mail is presented to the USPS. This standard applies to each address individually, not to a specific list or mailing. See E712.3.1.

(4) Dimensions for Machinable Parcels (DMM M050)

The minimum dimensions for a machinable parcel in DMM C050.4.1a are changed to not less than 6 inches long, 3 inches high, ¼ inch thick, and 6 ounces in weight. (A mailpiece exactly ¼ inch thick is subject to the 3½-inch height minimum under C010.) (The previous minimum weight was 8 ounces unless certain other conditions were met.) Some parcels may be successfully processed on BMC parcel sorters although they do not conform to the machinability standards in DMM C050.4.1. If this is the case, a BMC plant manager may authorize a mailer to enter such parcels as machinable parcels if the parcels are tested on BMC parcel sorters and prove to be machinable. Such an authorization applies only to mail that is both entered at a post office within the authorizing BMC's service area and is for delivery to an address within that BMC's service area. These changes also apply to Standard Mail.

(5) Sortation for Sacked Presorted Rate Bound Printed Matter (DMM M722)

(a) *General.* All flats and all irregular parcels that weigh less than 10 pounds must be prepared in packages prior to sacking. Machinable parcels are still placed directly in sacks without packaging, and irregular parcels weighing 10 pounds or more must be placed into sacks without packaging. Irregular parcels weighing 10 pounds or more that are placed directly in sacks must be individually enveloped, be placed in a full-length sleeve or wrapper, or be polywrapped. The provisions for preparing sacks to a particular presort destination based on a 1,000 cubic inch minimum are deleted.

(b) *Flats.* For flats prepared in sacks, mailers are required to prepare packages whenever there are at least 10 pieces or 10 pounds of mail, whichever occurs first, for a presort destination (5-digit, 3-digit, ADC), with remaining pieces placed in mixed ADC packages. ''Whichever occurs first'' means a mailing of identical-weight pieces weighing one pound or less must be packaged using the 10-piece package minimum, and those that weigh more must be prepared using the 10-pound package minimum. (See M722 for information concerning mailings of nonidentical weight pieces.) The maximum weight of any package is 20 pounds, except that 5-digit packages placed in 5-digit sacks may weigh up to 40 pounds. This allows packages prepared in other than 5-digit sacks to be processed on small parcel and bundle sorters (SPBSs). Each physical package is required to contain at least 2 addressed pieces except for mixed ADC packages.

These packages are required to be placed in sacks whenever there are at least 20 pieces or 20 pounds, whichever occurs first, for a sack destination (5-digit, 3-digit, optional SCF, ADC), with remaining packages placed in mixed ADC sacks. ''Whichever occurs first'' means that if the individual pieces in the mailing weigh one pound or less they must be sacked whenever there are 20 or more pieces to a sack destination, and individual pieces that weigh more than one pound must be sacked when there are 20 or more pounds to a sack destination. (See M722 for information concerning mailings of nonidentical weight pieces.)

(c) *Irregular Parcels That Each Weigh Less Than 10 Pounds.* For Presorted irregular parcels, mailers are required to prepare the mail in packages if the individual pieces weigh less than 10 pounds. Packages must be prepared whenever there are at least 10 pieces or 10 pounds to a presort destination, whichever occurs first. ''Whichever occurs first'' means a mailing of identical-weight pieces weighing one pound or less must be packaged using the 10-piece package minimum, and those that weigh more must be prepared using the 10-pound package minimum. (See M722 for information concerning mailings of nonidentical weight pieces.) The package destinations are the same as for flat-size pieces (5-digit, 3-digit, ADC, and mixed ADC). Mixed ADC packages may contain fewer than 10 pieces or 10 pounds of mail.

Sortation to ADCs is made using DMM L004 instead of L603, and mixed ADC sacks are labeled using DMM L004 instead of L604. The maximum weight of any package is 20 pounds, except that 5-digit packages placed in 5-digit sacks may weigh up to 40 pounds. Each physical package is required to contain at least 2 addressed pieces except for mixed ADC packages.

There is one exception to the packaging requirement. Mailers of irregular parcel BPM prepared in 5-digit sacks, may at their option, prepare such pieces loose in sacks without physical packaging provided the number of pieces in the sack meets the minimum package size and sack size requirements and the pieces in the 5-digit sack(s) are individually wrapped or enveloped.

Packages must be placed in 5-digit, 3-digit, optional SCF, and ADC sacks whenever there are 10 or more pieces or 20 or more pounds, whichever occurs first, for a sack destination. Remaining packages must be placed in mixed ADC sacks. ''Whichever occurs first'' means that if the individual pieces in the mailing weigh two pounds or less they must be sacked whenever there are 10 or more pieces to a sack destination, and individual pieces weighing more than two pounds must be sacked when there are 20 or more pounds to a sack destination. (See M722 for information concerning mailings of nonidentical weight pieces.)

(d) *Irregular Parcels That Each Weigh 10 or More Pounds.* Presorted irregular parcels that each weigh 10 or more pounds are not packaged, but must be placed in 5-digit, 3-digit, optional SCF, and ADC sacks whenever there are 20 or more pounds for a sack destination.

Remaining pieces are placed in mixed ADC sacks. Sortation to ADCs is made using DMM L004 instead of L603, and mixed ADC sacks are labeled using DMM L004 instead of L604. Irregular parcel-size pieces that each weigh 10 or more pounds are required to be individually enveloped, be placed in a full-length sleeve or wrapper, or be polywrapped prior to sacking.

(e) *Machinable Parcels.* For machinable parcels, sacks are prepared when there are at least 10 pieces or 20 pounds, whichever occurs first, for a required or optional sack level. The option to use 1,000 cubic inches as a minimum sacking criterion is deleted. The new ''whichever occurs first'' criterion means that if the individual pieces in the mailing weigh two pounds or less they must be sacked whenever there are 10 or more pieces to a sack destination, and individual pieces weighing more than two pounds must be sacked when there are 20 or more pounds to a sack destination. (See M722 for information concerning mailings of nonidentical weight pieces.) In addition, an optional ASF sack sortation level using DMM L602 is added for pieces that are entered at DBMC rates.

(6) Sortation for Sacked Carrier Route Rate Bound Printed Matter (DMM M020, M723)

(a) *Flats.* For flat-size mail, the basic eligibility requirement to qualify for carrier route rates of a minimum of 10 pieces/20 pounds/1,000 cubic inches of mail for the same carrier route is changed to require a minimum of 10 pieces or 10 pounds of mail, whichever occurs first, prepared in a package or packages for the same carrier route. ''Whichever occurs first'' means a mailing of identical-weight pieces weighing one pound or less must be packaged using the 10-piece package minimum, and those that weigh more than one pound must be prepared using the 10-pound package minimum. (See M722 for information concerning mailings of nonidentical weight pieces.)

In addition, the maximum weight of any flat-size package is 40 pounds. Each physical package must contain a minimum of two addressed pieces. The only exception to a minimum two-piece package is that the last physical package to an individual carrier route destination may consist of a single addressed piece provided that all other packages to that carrier route destination contained at least two addressed pieces and that the total group of pieces to that carrier route meets the applicable Carrier Route rate eligibility minimum in E712 (for flats, 10 pieces or 10 pounds, whichever occurs first).

Packages of flat-sized mail must be sacked for an individual carrier route whenever there are at least 20 pieces or 20 pounds of mail for a carrier route, whichever occurs first. The new ''whichever occurs first'' criterion means that if the individual pieces in the mailing weigh one pound or less they must be sacked whenever there are 20 or more pieces to a sack destination, and individual pieces weighing more than one pound must be sacked when there are 20 or more pounds to a sack destination. (See M722 for information concerning mailings of nonidentical weight pieces.)

Remaining carrier route packages must be sacked in 5-digit carrier routes sacks or, at the mailer's option, sacked to 5-digit scheme carrier routes sacks using L001.

(b) *Irregular Parcels Weighing Less Than 10 Pounds Each.* For mailings of Carrier Route irregular parcels that each weigh less than 10 pounds, mailers must prepare the mail in packages prior to sacking. A package must be prepared whenever there are at least 10 pieces or 20 pounds of mail to an individual carrier route, whichever occurs first. The new ''whichever occurs first'' criterion means that if the individual pieces in the mailing weigh two pounds or less they must be packaged whenever there are 10 or more pieces to a carrier route destination, and individual pieces weighing more than two pounds must be packaged when there are 20 or more pounds to a carrier route destination. (See M722 for information concerning mailings of nonidentical weight pieces.)

The maximum weight of any package is 40 pounds. Each physical package is required to contain a minimum of two addressed pieces. The only exception to a minimum two-piece package is that the last physical package to an individual carrier route destination may consist of a single addressed piece provided that all other packages to that carrier route destination contain at least two addressed pieces and that the total group of pieces to that carrier route meets the applicable Carrier Route rate eligibility minimum in E712 (for irregular parcels weighing less than 10 pounds, 10 pieces or 20 pounds, whichever occurs first).

Carrier route packages of irregular parcels must be placed in direct carrier route sacks when there are 10 or more pieces or 20 or more pounds to a carrier route, whichever occurs first. The new ''whichever occurs first'' criterion means that if the individual pieces in the mailing weigh two pounds or less they must be sacked whenever there are 10 or more pieces to a sack destination, and individual pieces weighing more than two pounds must be sacked when there are 20 or more pounds to a sack destination. (See M722 for information concerning mailings of nonidentical weight pieces.) Carrier route packages that cannot be placed in direct carrier route sacks must be placed in 5-digit carrier routes sacks. Preparation of 5-digit scheme carrier routes sacks for irregular parcels is not permitted.

(c) *Irregular Parcels That Each Weigh 10 or More Pounds.* For mailings of Carrier Route irregular parcels that each weigh 10 or more pounds, the mail is not prepared in packages, but must be placed only in direct carrier route sacks that each contain a minimum of 20 pounds of mail. Smaller volumes in a carrier route sack are not permitted.

(d) *Machinable Parcels.* Machinable parcels will be permitted to qualify for Carrier Route Bound Printed Matter rates if placed in direct carrier route sacks that each contain a minimum of 10 pieces or 20 pounds of mail, whichever occurs first. (Machinable parcels prepared on pallets under M045 are not eligible for Carrier Route Bound Printed Matter rates.) The new ''whichever occurs first'' criterion means that if the individual pieces in the mailing weigh two pounds or less they must be sacked whenever there are 10 or more pieces to a sack destination, and individual pieces that weigh more than two pounds must be sacked when there are 20 or more pounds to a sack destination. (See M722 for information concerning mailings of nonidentical weight pieces.) Smaller volumes in a sack are not permitted.

(e) *Residual Pieces.* The provisions for marking and sortation of residual pieces that do not qualify for the Carrier Route Bound Printed Matter rates have changed. Such pieces may no longer be sorted to carrier routes and may not bear the ''Carrier Route Presort'' marking. Such residual pieces are required to be marked and sorted in accordance with the requirements for Presorted rate mailings and will continue to qualify for the Presorted rates (see M723.1.5).

(7) Preparation of Packages on Pallets (DMM M040 and M045)

Flats prepared as packages on pallets are permitted to use optional scheme sort (DMM L001). For flat-size pieces prepared in a copalletized mailing job that contains both a Presorted rate mailing and a Carrier Route rate mailing, separate 5-digit pallets must be prepared for carrier route mail (optional 5-digit scheme carrier routes and required 5-digit carrier routes pallets), and separate 5-digit pallets must be

prepared for Presorted rate mail (optional 5-digit scheme and required 5-digit pallets).

For irregular parcels prepared as packages on pallets, mailers must prepare co-palletized Carrier Route and Presorted mail on the same 5-digit pallet. Scheme sortation is not permitted for packages of irregular parcels on pallets.

For flats and irregular parcels, packages are required to be made to a required package destination (carrier route, 5-digit, 3-digit, ADC) whenever there are 10 or more pieces or 10 or more pounds for a presort destination, whichever occurs first, except that the last package to a presort destination may weigh less than 10 pounds. ''Whichever occurs first'' means a mailing of identical-weight pieces weighing one pound or less must be packaged using the 10-piece package minimum, and those that weigh more must be prepared using the 10-pound package minimum. (See M722 for information concerning mailings of nonidentical weight pieces.) When there are at least 10 pieces, but fewer than 10 pounds for a presort destination, the pieces must be prepared in a single physical package.

ADC packages must be prepared using DMM L004 instead of L603. The maximum physical package size is 20 pounds except as follows. For Presorted rate mail, 5-digit packages may weigh up to 40 pounds if placed on a 5-digit scheme (flats only) or 5-digit pallet. For Carrier Route rate mail, flat-size carrier route packages may weigh up to 40 pounds if they are placed on 5-digit scheme carrier routes, or 5-digit carrier routes pallets, and irregular parcel-size carrier route packages may weigh up to 40 pounds if they are placed on a 5-digit pallet. Each physical package is required to contain at least 2 pieces.

When individual pieces weigh 10 or more pounds, they cannot be prepared as packages on pallets (except in those instances where 40-pound packages are permitted as described above). Such pieces that weigh 10 or more pounds are required to be prepared either as machinable parcels on pallets (eligible only for Presorted rates) or in sacks under M722 (Presorted rates) and/or M723 (Carrier Route rates). The new 20-pound package weight limit for flats and irregular parcels allows the packages to be processed on small parcel and bundle sorters (SPBSs).

(8) PAVE Certification and Package Reallocation

A requirement for the use of standardized documentation or Presort Accuracy Validation and Evaluation (PAVE)-certified software for Bound Printed Matter has not been added to the standards. However, the Postal Service plans to develop PAVE tests for Bound Printed Matter in the future. At that time, standardized documentation requirements will be developed and a Federal Register proposed rule to require either use of standardized documentation or use of PAVE-certified software for Presorted and Carrier Route Bound Printed Matter will be published for comment. Because use of optional package reallocation to protect SCF and BMC pallets requires use of PAVE-certified software, use of package reallocation for Bound Printed Matter flats is not available at this time. Use of package reallocation will be offered for Bound Printed Matter once use of PAVE-certified software becomes available.

(9) Bedloaded Bundles (DMM M722, M723)

The provisions for preparing bedloaded bundles in previous DMM M630.7.0 have been removed. A ''bundle'' is described as a group of packages secured together as a unit that equates to a sack. The Postal Service does not believe that any mailers are currently preparing true bedloaded ''bundles,'' although some mailers do prepare bedloaded ''packages.'' The Postal Service is implementing preparation rules for Bound Printed Matter that are designed to reduce handling and processing costs. Bedloaded packages or bundles are generally not cost-efficient for the Postal Service to handle and process. Therefore, these final sortation rules eliminate the option to prepare bedloaded bundles and allow mailers to prepare bedloaded packages only for mail that is prepared for and entered at the DDU rates (because DDU rate mail must be unloaded by the mailer). Such bedloaded packages may weigh up to 40 pounds each. See M722 and M723.

(10) Destination Bulk Mail Center (DBMC) Rates (DMM E752)

Destination Bulk Mail Center (DBMC) rates apply to Presorted and Carrier Route Bound Printed Matter mailings that are prepared in any permissible sack or pallet level and that are deposited at a BMC or ASF, are addressed for delivery to one of the 3-digit ZIP Codes served by the BMC or ASF where deposited that are listed in Exhibit E751.1.3, and are placed in a sack or pallet that is labeled to the BMC or ASF where deposited, or labeled to a postal facility within the service area of that BMC or ASF under Exhibit E751.1.3.

Flats or irregular parcels in an ADC sack or in a palletized ADC package are eligible for the DBMC rates if the ADC facility ZIP Code (as shown in Line 1 of the corresponding sack label or the ADC facility that is the destination of the palletized ADC package as would be shown on an ADC sack label for that facility using DMM L004, Column B) is within the service area of the BMC or ASF at which the sack is deposited.

Flats or irregular parcels in mixed ADC sacks qualify for the DBMC rates only if all the pieces in the sack are for the service area of the DBMC or DASF as shown in Exhibit E751.1.3. Mailers who opt to claim the DBMC rates for mail in mixed ADC sacks are required to prepare separate mixed ADC sacks for pieces eligible for and claimed at the DBMC rate and for pieces not claimed at the DBMC rate (one set of mixed ADC sacks containing packages qualifying for DBMC rates and one set of mixed ADC sacks for packages that do not qualify for DBMC rates). For this purpose, DMM E650 and E752 specify that mailers assign ADC packages to the respective qualifying or nonqualifying mixed ADC sacks based on the ''label to'' ZIP Code for the ADC. For mixed ADC packages, separate mixed ADC packages must be prepared based on the individual addresses on the pieces. That is, a mixed ADC package(s) for pieces within the ASF or BMC entry point must be prepared and a separate mixed ADC package(s) for pieces outside the entry ASF or DBMC area (using either Exhibit E650.5.1 or E751.1.3) must be prepared.

Machinable parcels palletized under M045 or sacked under M722 may be sorted to destination BMCs under L601 or to destination BMCs and ASFs under L601 and L602. Sortation of machinable parcels to ASFs is optional but is required to be eligible for DBMC rates for mail with a 3-digit ZIP Code prefix within the ASF service area in Exhibit E751.1.3. Mailers may opt to sort some or all machinable parcels for ASF service area ZIP Codes to ASFs only when the mail will be deposited at the respective ASFs where the DBMC rates are claimed, under applicable volume standards, using L602. Mailers may also opt to sort machinable parcels only to destination BMCs under L601. If machinable parcels are sorted to only destination BMCs under L601, then only mail for 3-digit ZIP Codes served by a BMC as listed in Exhibit E751.1.3 would be eligible for DBMC rates (mail for 3-digit ZIP Codes served by an ASF in Exhibit E751.1.3 sorted to the BMC pallet would not be eligible for DBMC rates, nor would mail for 3-digit ZIP Codes that do not appear in Exhibit E751.1.3).

Machinable parcels in mixed BMC sacks or on mixed BMC pallets that are sorted to the origin BMC under M045 or M722 are eligible for the DBMC rates only if both of the following conditions are met: (1) The mixed BMC sack or pallet is entered at the origin BMC facility to which it is labeled, and (2) the pieces are for 3-digit ZIP Codes listed as eligible destination ZIP Codes for that BMC in Exhibit E751.1.3.

(11) Destination Sectional Center Facility (DSCF) Rates (DMM E752)

Destination Sectional Center Facility (DSCF) rates apply to Presorted and Carrier Route Bound Printed Matter mailings that meet all of the following conditions:

(a) Are eligible for and prepared to qualify for Presorted or Carrier Route rates.

(b) Are deposited at an SCF listed in L005, except that machinable parcels prepared on pallets for the 5-digit ZIP Codes listed in Exhibit E751.6.0 must be entered at the corresponding BMC facility shown in that Exhibit (not at the SCF) unless an exception is requested and granted. An exception to Exhibit 751.6.0 must be requested at least 15 days in advance of the mailing in writing from the area manager of operations support who has jurisdiction over the BMC and SCF. Exceptions, if granted, will be for a limited time.

(c) Are addressed for delivery to one of the 3-digit ZIP Codes served by the SCF where deposited under L005.

(d) Are placed in a sack or on a pallet (subject to the standards for the rate claimed) that is labeled to the DSCF where deposited, or labeled to a postal facility within the service area of that SCF (see L005).

Flats in sacks for the carrier route, 5-digit carrier routes scheme, 5-digit carrier routes, 5-digit, 3-digit, and optional SCF sort levels may claim DSCF rates under the conditions described above. Flats on 5-digit scheme carrier routes, 5-digit carrier routes, 5-digit scheme, 5-digit, 3-digit, SCF, and ASF pallets may claim DSCF rates under the conditions described above.

Irregular parcels in sacks for the carrier route, 5-digit carrier routes, 5-digit, 3-digit, and optional SCF sort levels may claim DSCF rates under the conditions described above. Irregular parcels on 5-digit, 3-digit, SCF, and ASF pallets may claim DSCF rates under the conditions described above.

Machinable parcels in direct carrier route sacks, in 5-digit sacks, or on 5-digit pallets may claim DSCF rates under the conditions described above. Machinable parcels prepared to claim Carrier Route rates are eligible for DSCF rates only when prepared in direct carrier route sacks (machinable parcels qualify for Carrier Route rates only when prepared in direct carrier route sacks). Presorted rate machinable parcels on 5-digit pallets may claim DSCF rates under the conditions described above. Note that palletized machinable parcels for the 5-digit ZIP Codes listed in Exhibit E751.6.0 must be entered at the applicable BMC to claim DSCF rates.

For mailings prepared for the DSCF rate in pallet boxes, the height of the pallet box may not exceed 60 inches (excluding the pallet) as is currently required for Parcel Select DSCF rate mail (DMM M041.4.2).

(12) Destination Delivery Unit (DDU) Rates (DMM E752)

New Destination Delivery Unit (DDU) rates apply to Presorted and Carrier Route rate Bound Printed Matter mailings that are addressed for delivery within the ZIP Code(s) served by the destination delivery unit and are deposited at the appropriate destination delivery unit facility.

For flat-size Presorted Bound Printed Matter, DDU rates may be claimed only for individual pieces that weigh more than one pound. (This minimum weight may increase in the near future dependent on AFSM 100 machinability requirements.) To qualify for DDU rates, Presorted rate flats must be prepared in 5-digit sacks, or on optional 5-digit scheme or required 5-digit pallets, or be prepared as bedloaded 5-digit packages. The Drop Shipment Product must be used to determine the correct destination entry facility for the 5-digit destination of the container. If the Drop Shipment Product lists multiple facilities for a single 5-digit ZIP Code, the mailer must inquire about the correct drop site when contacting the DDU to schedule an appointment.

For flat-size Carrier Route Bound Printed Matter, DDU rates may be claimed for mail prepared in carrier route, optional 5-digit carrier routes scheme, and 5-digit carrier routes sacks; on 5-digit scheme carrier routes scheme and 5-digit carrier routes pallets; or in bedloaded carrier route packages. There is no minimum weight for individual flat-size pieces to qualify for Carrier Route rate flat-size pieces. Carrier Route rate flat-size mail must be entered at the facility where the carrier cases flat-size mail as shown in the Drop Shipment Product.

For irregular parcels of Carrier Route Bound Printed Matter, DDU rates may be claimed for mail prepared in carrier route and, for pieces each weighing less than pounds only, in 5-digit carrier routes sacks. For irregular parcels of Presorted Bound Printed Matter, DDU rates may be claimed for mail prepared in 5-digit sacks or on 5-digit pallets. Irregular parcels prepared as bedloaded carrier route packages or bedloaded 5-digit packages also are eligible for DDU rates.

For machinable parcels of Carrier Route Bound Printed Matter, DDU rates are available for carrier route parcels prepared in direct carrier route sacks. For machinable parcels of Presorted Bound Printed Matter, DDU rates are available for parcels prepared in 5-digit sacks or on 5-digit pallets.

To claim the DDU rates, both irregular and machinable parcels must be entered at the facility that delivers parcels to the addresses appearing on the deposited pieces. Mailers must use the Drop Shipment Product to determine the location of the 5-digit delivery facility and whether it can handle pallets. When the Drop Shipment Product shows that parcels for a single 5-digit ZIP Code area is delivered out of more than one postal facility, then the facility from which the majority of city carrier routes are delivered is the facility at which the DDU mail must be entered, unless the 5-digit ZIP Code is listed in Exhibit E751.7.0 or Exhibit E751.8.0. For ZIP Codes in Exhibit E751.7.0 and Exhibit E751.8.0, mailers would use the name of the facility associated with the 5-digit ZIP Code on the respective exhibit as the facility at which DDU mail for that 5-digit ZIP Code mail must be entered. Mailers who palletize machinable and irregular parcels must also determine if the 5-digit facility is able to handle pallets using the Drop Shipment Product. If the 5-digit facility is unable to handle pallets, and a mailer transports mail to the DDU facility on pallets, the driver will have to unload the pallets into a container specified by the delivery unit.

(13) Destination Entry Mail Preparation—Plant-Verified Drop Shipment (PVDS) (DMM E752)

Pieces must be part of a mailing of at least 300 pieces of Presorted Bound Printed Matter or part of a mailing of at least 300 pieces of Carrier Route Bound Printed Matter to qualify for DBMC, DSCF, and DDU rates. When Presorted Bound Printed Matter or Carrier Route Bound Printed Matter mailings are submitted under PVDS procedures, mailers may use the total of all line items for all destinations on a PVDS register or PVDS postage statement to meet the respective 300-piece minimum volume requirements. This means that a mailer may enter fewer than 300 pieces per Presorted or Carrier Route mailing at

an individual destination, provided there is a total of at least 300 Presorted rate pieces and/or 300 Carrier Route rate pieces for all of the entry points for that single mailing job listed on the PVDS register or PVDS postage statement.

(14) Detached Address Label Mailings (DMM A060)

The preparation requirements for use of DALs with Bound Printed Matter mailings are revised. Mailers must prepare Bound Printed Matter with DALs either on pallets or in sacks as described in DMM A060.

When prepared on pallets, mailers may enter Bound Printed Matter prepared with DALs at any post office provided only 5-digit pallets are prepared and if the following additional requirements and restrictions are met. The 5-digit pallets must meet the minimum volume and other requirements for pallet preparation under M040 and M045, except that for flat-size mail, separate 5-digit pallets for Carrier Route rate and for Presorted rate mail are not required. The mail must not be prepared on pallets when the Drop Shipment Product indicates that the delivery unit that serves the 5-digit pallet destination cannot handle pallets. The destination delivery unit is determined using the Drop Shipment Product under the provisions for the DDU rate in E752. (For delivery units that cannot handle pallets, mail with DALs is required to be prepared in sacks.) The trays or cartons of DALs must be prepared under A060.3.0 and placed on the same pallet as the Bound Printed Matter. In addition, the Bound Printed Matter and the trays of DALs must be stretch-wrapped together as one unit on the pallet.

For mail prepared with DALs in sacks, the matter must be prepared in 5-digit sacks and must be entered at the destination delivery unit. The destination delivery unit must be determined using the Drop Shipment Product under the provisions for the DDU rate in DMM E752. The DALs must be packaged under A060.3.0 and presented to the destination delivery unit with the accompanying items to be distributed with the DALs. The standards for DALs are amended to clarify that items mailed with DALs may not be combined with any special services (new A060.1.7). In addition, the standards for DALs in A060.4.2 are amended to specify that an undeliverable-as-addressed DAL is disposed of as waste, and the accompanying item is treated as specified by the mailer under A060.4.1.

(15) Ancillary Service Endorsements

The handling of undeliverable-as-addressed Bound Printed Matter pieces that are not mailed with a special service or an ancillary service endorsement will be the same as for Standard Mail. Undeliverable-as-addressed Bound Printed Matter pieces mailed with no special service (*e.g.,* Delivery Confirmation, insured), and with no ancillary service endorsement, will be disposed of by the USPS as waste at the delivery unit. Mailers of Bound Printed Matter who want to have their undeliverable-as-addressed pieces forwarded and returned must choose the appropriate ancillary service endorsement and print it on their pieces to obtain such service. There are no other changes to the treatment of undeliverable-as-addressed Package Services mail (except for Bound Printed Matter prepared with detached address labels under DMM A060.4.2 as described earlier.)

(16) Postage Payment

DMM P700 is amended to clarify that precanceled stamps may not be used for payment of Bound Printed Matter postage.

*9. Media Mail (Formerly Special Standard Mail)*

a. Media Mail Rate Highlights

Media Mail (formerly Special Standard Mail) rates will increase by an average of 6.3%. The barcoded discount for qualifying Media Mail remains at $0.03 per piece. There are separate rate schedules for Media Mail and Library Mail as the shared rate structure is discontinued. The annual presort mailing fee for Media Mail increases to $125.

b. Media Mail Rate Structure

There are separate rate schedules for Media Mail and Library Mail.

c. Media Mail (formerly Special Standard Mail) Preparation Changes

(1) Rate Marking (DMM M012 and M730)

Special Standard Mail is renamed ''Media Mail,'' and the marking that is required to appear on each piece is changed from ''Special Standard'' to ''Media Mail.'' There is a phase-in period until January 1, 2002, to give mailers time to adjust to this change and deplete any existing stocks of permit imprints that may bear the '' Special Standard'' marking.

(2) Sack and Pallet Labels (DMM M031, M045, and M730)

The abbreviation ''STD'' or ''STD B'' that currently appears on sack and pallet labels for Package Services mailings is changed to ''PSVC'' (an abbreviation for Package Services).

(3) Clarification of Preparation Requirements

Former M630.4.0 provided for preparing Media Mail as bedloaded bundles under former M630.7.0. However, former M630.7.0 provided only for preparation of Bound Printed Matter as bedloaded bundles, and the eligibility requirements for the Media Mail rates in former E630.4.0 provided only for preparation of Media Mail in sacks, on pallets, or as outside parcels prepared as prescribed by the postmaster of the mailing office. Accordingly, the provisions for preparing bedloaded bundles of Media Mail are deleted from M730 that contains the requirements for presorted Media Mail.

Former E630.4.0 (renumbered as E713) provided for preparing 5-digit and BMC bundles of Media Mail on pallets. The terminology in new E713 is changed to provide for ''packages'' of Media Mail on pallets. Furthermore, the reference in former M630.4.0 that referred to preparing mail according to the machinable parcel preparation rules is not contained in new M730. There were no provisions for such preparation to qualify for presorted Media Mail rates in former E630.4.0, and such provisions were not added to new E713. The option to prepare sacks and qualify for presorted 5-digit or BMC rates based on a minimum of 1,000 cubic inches of mail is deleted; however, the eight-piece or 20-pound minimum per 5-digit sortation level and the four-piece or 20-pound minimum per BMC sortation level is retained.

(4) Postage Payment (DMM P700)

DMM P700 is amended to clarify that precanceled stamps may not be used for payment of Media Mail postage.

*10. Library Mail*

a. Library Mail Rate Highlights

Library Mail rates will increase by an average of 4.9%. The barcoded discount for qualifying Library Mail remains at $0.03 per piece. Separate rate schedules are implemented for Media Mail and Library Mail as the shared rate structure is discontinued. The annual presort mailing fee for Library Mail is increased to $125.

b. Library Mail Rate Structure

There are separate rate schedules for Library Mail and Media Mail.

c. Library Mail Preparation Changes

(1) Rate Markings (DMM M012 and M740)

The optional use of ''Library Rate'' as a rate marking for Library Mail is being discontinued. Matter mailed at Library Mail rates will be required to use only the marking ''Library Mail.'' There is a phase-in period until January 1, 2002, to give mailers time to adjust to this change and deplete any existing stocks of permit imprints that may bear the ''Library Rate'' marking.

(2) Sack and Pallet Labels (DMM M031, M045, and M740)

The abbreviation ''STD'' or ''STD B'' that currently appears on sack and pallet labels for Package Services mailings is changed to ''PSVC'' (an abbreviation for Package Services).

(3) Sack Preparation Minimums (DMM M740)

The option to prepare sacks and qualify for presorted 5-digit or BMC rates based on a minimum of 1,000 cubic inches of mail is deleted (see M740).

(4) Postage Payment (DMM P700)

DMM P700 is amended to clarify that precanceled stamps may not be used for payment of Library Mail postage.

*11. Special Services and Other Services*

a. Address Changes for Election Boards (DMM A910)

The fee will increase from $0.17 to $0.23 for each address card. There are no classification changes for this service. See DMM R900.12.3.

b. Address Correction Notifications (DMM F030)

The manual (hard-copy) fee will increase from $0.50 to $0.60 for each notification. There is no change to the automated (electronic) fee notification (currently $0.20 each). There are no classification changes for this service. See DMM R900.1.0.

c. Bulk Parcel Return Service (DMM S924)

The per piece charge will decrease from $1.75 to $1.62 for each piece returned under Bulk Parcel Return Service (BPRS). The annual BPRS permit fee will increase from $100 to $125. A new annual accounting fee of $375 will be required for BPRS. This fee covers the costs of providing BPRS account maintenance services to mailers and is consistent with accounting fees charged for other special services. Current BPRS permit holders will have until February 5, 2001, to pay their initial annual accounting fee. See DMM R900.3.0.

No special services are available for pieces returned through BPRS.

d. Business Reply Mail

(1) Business Reply Mail (BRM) (DMM S922)

The annual business reply mail (BRM) permit fee will increase from $100 to $125.

The per piece charge for basic BRM (BRM without an annual accounting fee) will increase from $0.30 to $0.35. This per piece charge is in addition to single-piece First-Class Mail (or Priority Mail) postage. The per piece charge for high-volume BRM (BRM with an annual accounting fee) will increase from $0.08 to $0.10. This per piece charge is in addition to single-piece First-Class Mail (or Priority Mail) postage. The annual accounting fee, required for high-volume BRM, will increase from $300 to $375.

A provision in the DMCS that required permit holders to maintain an advance deposit account solely for the use of business reply mail has been deleted. Therefore, permit holders will be able to maintain a single advance deposit account from which postage, fees, and per piece charges for multiple items can be deducted (e.g., BRM, QBRM, merchandise return service, incoming shortpaid mail, address correction notices, etc.). If permit holders request separation of charges, then they must pay an annual accounting fee for each separation.

(2) Qualified Business Reply Mail (QBRM) (DMM E150, S922)

The discounted automation rate for qualified business reply mail (QBRM) letters will increase from $0.30 to $0.31 as described under the First-Class Mail Summary. The discounted automation rate for QBRM cards will decrease from $0.18 to $0.17. The annual accounting fee, required to participate in QBRM, will increase from $300 to $375.

QBRM will be split into two categories with different per piece charges to mirror the current fee structure of regular BRM. The first category is the existing classification and will be called ''basic'' QBRM. The per piece charge for basic QBRM will remain at $0.05. This per piece charge is in addition to the lower QBRM First-Class Mail postage listed in R100. See DMM R900.4.3.

A new classification, called ''high-volume'' QBRM, recognizes that, for large volume users, some costs are relatively fixed, rather than varying with marginal volume. High-volume QBRM includes a lower per piece charge and requires payment of a new quarterly fee in addition to the annual accounting fee. The per piece charge for high-volume QBRM will be $0.01. This per piece charge is in addition to the discounted automation QBRM First-Class Mail rate listed in R100. The quarterly fee will be $1,800 per quarter (in addition to the $375 annual accounting fee). Mailers may ''opt in'' to high-volume QBRM by paying the quarterly fee at any time as their volume warrants, thereby paying lower per piece charges when they expect a larger volume of returned pieces. See DMM R900.4.4.

Quarterly fees apply to any three consecutive calendar months, beginning with the first calendar day of the first month and ending on the last calendar day of the third month. If the quarterly fee is paid on or before the 15th of the month, then the quarterly fee is counted as if it was paid on the first day of that calendar month, but the lower per piece charges begin on the day the fee is paid. If the quarterly fee is paid after the 15th of the month, then the lower per piece charges begin immediately, but the quarterly fee is credited as if it was paid on the first day of the following calendar month and continues through three calendar months. Mailers may not apply for ''retroactive'' refunds of per piece charges for periods before the quarterly fee was paid.

(3) Bulk Weight Averaged Nonletter-Size Business Reply Mail (DMM S922)

Language has been added to clarify that the monthly maintenance fee applies only to bulk weight averaged nonletter-size BRM. The per piece charge will remain at $0.01. The maintenance fee will remain at $600 per month. The annual business reply mail permit fee will increase from $100 to $125. The annual accounting fee, required to participate in weight averaged nonletter-size BRM, will increase from $300 to $375. See DMM R900.4.5.

e. Carrier Sequencing of Address Cards (DMM A920)

The fee will increase from $0.20 to $0.25 for each card removed due to an incorrect or undeliverable address and for each card added with a new address. There are no classification changes for this service. See DMM R900.2.0.

f. Certificate of Mailing (DMM S914)

For individual pieces, the fee for the original certificate of mailing will increase from $0.60 to $0.75. The firm

mailing book fee will remain at $0.25; the fee for an additional copy of a certificate of mailing will increase from $0.60 to $0.75.

For bulk quantities, the fee for one certificate of mailing (for the first 1,000 pieces) will increase from $3.00 to $3.50. There is no change to the fee for a certificate for each additional group of 1,000 pieces (currently $0.40). The fee for an additional copy of a bulk certificate of mailing will increase from $0.60 to $0.75.

There are no classification changes for this service. See DMM R900.6.0.

g. Certified Mail (DMM S912)

The fee will increase from $1.40 to $1.90 in order to cover newly estimated costs for this service. See DMM R900.7.0.

h. Collect on Delivery (COD) (DMM S921)

Fees will increase by $.50 for every $100 value level. The maximum COD value level will increase from $600 to $1,000, with a fee increment of $1.00 for each $100 increment. The fees for registered COD, the notice of nondelivery, and the alteration of COD charges (Form 3849–D) will remain at current levels. The money order limit will remain at $700; therefore, if a recipient pays in cash for COD amounts over $700, then the Postal Service will send two postal money orders to the mailer (and collect two money order fees from the recipient). See DMM R900.8.0.

i. Correction of Mailing Lists (DMM A910)

The charge per correction will increase from $0.20 to $0.25. In conjunction, the minimum charge per list for lists with fewer than 30 addresses will increase from $7.00 to $7.50. There are no classification changes for this service. See DMM R900.12.0.

j. Delivery Confirmation (DMM S918)

The fee for retail option Priority Mail Delivery Confirmation (*i.e.,* purchased by a customer over a retail counter) will increase from $0.35 to $0.40. The fee for retail option Package Services Delivery Confirmation will decrease from $0.60 to $0.50. There will continue to be no fee for electronic option Delivery Confirmation for Priority Mail. The fee for electronic option Delivery Confirmation for Package Services will decrease from $0.25 to $0.12.

Electronic option Delivery Confirmation service will be extended to Standard Mail parcels that are subject to the residual shape surcharge (both Regular and Nonprofit subclasses). Delivery Confirmation service will not be available for the Enhanced Carrier Route or Nonprofit Enhanced Carrier Route subclasses. No retail option will be available for Standard Mail. The fee for electronic option Delivery Confirmation for Standard Mail will be $0.12 per piece, which mirrors the new fee for Package Services. See DMM R900.9.0.

k. Express Mail Insurance (DMM S500)

Fees for Express Mail insurance will increase. There are no classification changes for this service. See DMM R900.10.0.

l. Insurance (DMM S913)

Fees for insurance will increase for all value levels. The fee for unnumbered insurance (items valued at $50 or less) will increase from $0.85 to $1.10. Separate bulk discounts for unnumbered and numbered insurance have been added. In addition, bulk insurance will be available for Standard Mail parcels that are subject to the residual shape surcharge (both Regular and Nonprofit subclasses). Bulk insurance will not be available for the Enhanced Carrier Route or Nonprofit Enhanced Carrier Route subclasses. Regular insurance is not available for Standard Mail. See DMM R900.11.0.

The Postal Service has removed the requirement that insured pieces sent at First-Class Mail and Priority Mail rates be marked ''Standard Mail Enclosed.'' In addition, merchandise return service (MRS) customers (those who use MRS labels to return a parcel to the permit holder) will be permitted to add insurance to an MRS parcel at their own discretion and expense.

m. Mailing Fees

Presort mailing fees and destination entry mailing fees for all classes of mail will increase. Specific fees and classification changes are included under the separate summaries for each class of mail.

n. Merchandise Return Service (DMM S923)

The per piece (transaction) fee for parcels returned to the permit holder via merchandise return service (MRS) will be eliminated. A new annual accounting fee of $375 is established for MRS. This fee covers the costs of accounting services provided to permit holders and is consistent with accounting fees charged for other special services. Current MRS permit holders have until February 5, 2001, to pay their initial annual accounting fee. A separate annual accounting fee must be paid for each separation of charges and separate billing provided. This makes the application of the new annual accounting fee consistent with Business Reply Mail. See DMM R900.13.0.

If the permit holder has not specified insurance on the MRS label, then customers (those who use merchandise return service labels to return a parcel to the permit holder) will be permitted to add insurance to a MRS parcel at their own discretion and expense. No other special services may be added by the sender. Previously, insurance could be added to a parcel only if specified by the permit holder. The Postal Service has removed the requirement that MRS parcels sent at First-Class Mail and Priority Mail rates be marked ''Standard Mail Enclosed.''

Parcels that do not bear a class or rate marking, regardless of weight, will be treated as Parcel Post and will be charged Parcel Post Inter-BMC/ASF rates.

These same changes apply to penalty merchandise return service.

o. Money Orders (DMM S020)

The fee for domestic money orders will decrease from $0.80 to $0.75 per money order. The fee for APO/FPO money orders will decrease from $0.30 to $0.25 per money order. The inquiry fee will remain at $2.75. There are no classification changes for this service; the maximum amount for a single money order remains at $700. See DMM R900.15.0.

p. Parcel Airlift Service (PAL) (DMM S930)

There are no fee or classification changes for this service. See DMM R900.16.0.

q. Permit Imprint Application Fee (DMM P040)

The application fee for permit imprints will increase from $100 to $125. Other kinds of permit fees (*e.g.,* business reply mail) are covered under separate summary sections. See DMM R900.17.0.

r. Pickup Service (DMM D010)

The pickup service fee will increase from $8.25 to $10.25 per pickup. There are no classification changes for this service. See DMM R900.18.0.

s. Post Office Boxes, Caller Service, and Reserve Call Numbers (DMM D910 and D920)

The Postal Rate Commission has approved the Postal Service's proposal to restructure post office box fee groups and to establish fees for each of the new groups. A nonrefundable fee for each

key, over two, requested by a customer has been established at $4.00. In addition, a $10.00 fee for a lock replacement initiated by a customer as been established.

The new structure for post office boxes aligns post office box fees more closely with costs by 5-digit ZIP Code. These costs include estimated real estate value of the space used to provide post office boxes.

The Postal Service submits that this post office box reclassification will result in fairer, more equitable post office box fees for all customers because the fees will more accurately reflect the true costs of providing that service. At this time, box restructuring is constrained based on current fee groups in order to mitigate large fee increases for customers.

Current post office box customers would not pay the new fees until their current box fee period ends. There are no changes to free (Group E) box service. Therefore, customers who currently qualify for free box service may continue to receive it. See DMM R900.19.0.

Post offices will be notified of their new cost group via a special publication that will be distributed before implementation of new rates and fees. Customers will be able to find their new post office box fees via their local post office, the Postal Service web site (www.usps.com), or by calling 1–800–ASK–USPS and providing the 5-digit ZIP Code.

The caller service fee will increase to $375 for all customers at all postal facilities. Caller service fees will no longer be broken out according to post office fee groups. The annual call number reservation fee will decrease from $36 to $30. See R900.5.0.

The Postal Service has deleted a provision from the DMCS that allowed customers with both a post office box and a regular street delivery address served by the same delivery unit to redirect the delivery of all of their mail, regardless of how it was addressed, to the post office box. This redirection of mail often depends on the memory of specific individuals or on an ad hoc handwritten note. The net result easily can be delivery of mail in a fashion contrary to a customer's intent. The Domestic Mail Manual currently does not contain standards related to this provision, although some local post offices redirect mail as a favor to customers. The policy of the Postal Service, as contained in the Domestic Mail Manual, is to deliver mail to the address specified on the mailpiece. Deleting section 921.222 of the DMCS is desirable from the point of view of the customer and the Postal Service. Customers will still be able to have their mail forwarded from one address to another, including a post office box, based on current forwarding procedures. Because no standard currently exists in the Domestic Mail Manual, no changes are necessary to support this DMCS change.

t. Registered Mail (DMM S911)

All registered mail fees will increase. The incremental fee for registered mail per value level will increase from $0.55 to $0.75. The handling charge per $1,000 in value, or fraction thereof, for items valued over $25,000 also will increase from $0.55 to $0.75. There are no classification changes for this service. See DMM R900.20.0.

u. Restricted Delivery (DMM S916)

The restricted delivery fee will increase from $2.75 to $3.20. There are no classification changes for this service. See DMM R900.21.0.

v. Return Receipt (DMM S915)

The regular return receipt fee will increase from $1.25 to $1.50. The return receipt for merchandise fee will increase from $1.40 to $2.35. The fee for a return receipt after mailing will decrease from $7.00 to $3.50. These changes reflect improved cost estimates and the impact of electronic signature capture. See DMM R900.22.0 and 23.0.

There are two classification changes for return receipt service. The first change allows return receipt for merchandise to be combined with unnumbered insurance. The second change extends return receipt for merchandise service to Standard Mail parcels that are subject to the residual shape surcharge (both Regular and Nonprofit subclasses). Return receipt for merchandise will not be available for the Enhanced Carrier Route or Nonprofit Enhanced Carrier Route subclasses.

w. Shipper Paid Forwarding (DMM F010)

The Postal Service is establishing an annual accounting fee of $375 for shipper paid forwarding for customers who choose to pay forwarding charges through a postage due account. This fee is consistent with accounting fees charged for other special services. See DMM R900.24.0.

x. Signature Confirmation (DMM S919)

The Postal Service is establishing a new classification and fee schedule for Signature Confirmation. Signature Confirmation will capture and provide access to all Delivery Confirmation data and an image of the recipient's signature. Signature Confirmation will be available only at the time of mailing for Priority Mail and all subclasses of Package Services. For Priority Mail Signature Confirmation, the fees are $1.25 for electronic option and $1.75 for retail option. For Package Services Signature Confirmation, the fees are $1.25 for electronic option and $1.75 for retail option. See DMM R900.25.0.

y. Special Handling (DMM S930)

There are no fee or classification changes for this service. See DMM R900.26.0.

z. ZIP Code Sortation of Mailing Lists (DMM A910)

Fees for sorting mailing lists by 5-digit ZIP Code for post offices with multiple ZIP Codes will increase from $70.00 to $73.00 per 1,000 addresses. There are no classification changes for this service. See DMM R900.12.0.

*12. On-Site Meter Service (DMM P030)*

The name of the service will change from ''on-site meter settings'' to ''on-site meter service.'' The ''single meter'' and ''unscheduled appointment'' categories will be replaced with a new ''meter service'' category. The ''additional meters'' category will be replaced with a ''meter reset and/or examined'' category. These categories will consolidate similar fees and make the service easier to understand and use.

New fees have been established for these realigned categories. The fee for meter service is $31.00. The fee for getting a meter reset and/or examined is $4.00 per meter. The fee for checking a meter in or out of service will decrease from $8.00 to $4.00 per meter. See DMM R900.14.0.

The checking in/out fees will not apply to ''secured postage'' meters. To qualify as a secured postage meter, a meter must: (1) include a USPS-approved postal security device; (2) print information-based indicia; and (3) be remotely set. Because of the enhanced security that these meters provide, they do not require labor intensive activities during installation or withdrawal. Therefore, these meters do not have significant check-in/out costs.

*13. Stamps and Stationery (DMM P021)*

a. Stamped Cards

The fee for a single stamped card will increase from $0.01 to $0.02. The fee for double stamped cards will increase from $0.02 to $0.04, and the fee for a sheet of 40 stamped cards will increase from $0.40 to $0.80. These fees are in addition to the postage that is preprinted on the cards and covers the

cost of printing and manufacturing stamped cards. See DMM R000.3.0.

b. Stamped Envelopes

The fees for all categories of stamped envelopes will increase. This fee is paid in addition to the postage preprinted on the envelopes. The following classification changes will apply to stamped envelopes:

(1) Merge the printed household 6¾ inch and 10 inch categories into a single category called printed household (basic).

(2) Eliminate the banded categories for 6¾ inch and 10 inch envelopes.

(3) Expand the hologram category to include all envelopes that have a patched-in stamp and rename that category ''special'' stamped envelopes.

See DMM R000.1.0 and R000.2.0.

**C. Summary of Comments From the August 29, 2000, Proposed Rule (65 FR 52479)**

The Postal Service received nine pieces of correspondence offering comments on the August 29, 2000, proposed rule. Commenters included two major mailer associations, six publishers, printers and/or mailers, and one individual.

The specific points raised in the comments are presented below, organized by general comments and then by class of mail and special service.

*1. General Comments*

One commenter commended the Postal Service on publishing a clear, concise, and orderly proposed rule.

One commenter supported the change of the minimum dimensions for a machinable parcel.

One commenter indicated they are pleased with the name change from Standard Mail (B) to Package Services.

One commenter indicated that their association had previously warned the Postal Service that eliminating the advertising requirement for Bound Printed matter would change the nature of that subclass and result in the entry of higher cost materials that would inevitably result in higher rates. This commenter further stated that although all mailers are concerned about rate increases the effect is much greater for catalog mailers than book mailers because books generally cost a substantial amount—$20.00 and more—and that book publishers can more easily absorb additional mailing costs. This commenter indicated it may be feasible to undo the damage by restoring Bound Printed Matter to its previous status by requiring it to contain advertising. This comment is outside the scope of this rulemaking and will not be addressed.

One commenter indicated that their association recommends that the Postal Service give Standard and Package Services mailers a grace period to implement the new tray, sack, and pallet labels for those classes. The Postal Service will work with individual mailers concerning any exceptions needed concerning the requirements of this final rule.

Two commenters indicated that the rate incentive for drop shipping Bound Printed Matter to a destination delivery unit to claim the DDU rates was not sufficient to compensate mailers for the additional costs of preparing and transporting the mail. These comments are outside the scope of this rulemaking process. The rates, rate structure, and basic standards for rates in Docket No. R2000–1 were subject to litigation before the Postal Rate Commission and cannot be revised unilaterally by the Postal Service in a rulemaking process.

*2. Express Mail*

No comments were received regarding Express Mail.

*3. Priority Mail*

No comments were received regarding Priority Mail.

*4. First-Class Mail*

No comments were received regarding First-Class Mail.

*5. Periodicals*

No comments were received regarding Periodicals.

*6. Standard Mail (Formerly Standard Mail (A))*

One commenter supported the change that they believed allowed Delivery Confirmation and ancillary service endorsements to be used with Standard Mail pieces subject to the residual shape surcharge that are mailed using Priority Mail Drop Shipment procedures. The Postal Service did not specifically propose use of electronic Delivery Confirmation with Standard Mail parcels entered under Priority Mail Drop Shipment procedures, but has added clarifying language to the final rule DMM language to provide for such use where appropriate.

*7. Package Services—Combined Mailings*

One commenter supported the change that allows the combining of any subclass into common containers to qualify for applicable DBMC, DSCF, and DDU rates. The Postal Service appreciates this comment but would like to point out that the provisions for Combined Package Services mailings in DMM E753 apply only to matter sorted to 5-digit containers for the purposes of meeting eligibility requirements for DSCF and DDU rates. There are no provisions for Combined Package Services mailings for DBMC rates.

One commenter requested that overflow sacks be permitted in the preparation standards for combined package services mailings in DMM E753 that allows parcels from all Package Services subclasses to be combined in 5-digit sacks to qualify for Parcel Post and Bound Printed Matter DSCF and DDU rates. The proposed rule indicated that each 5-digit sack must contain at least 10 pieces of any combination of Package Services mail. This commenter indicated that, if an overflow sack is not permitted, the number of pieces qualifying for this preparation option would always need to be perfectly divisible by 10 and that this is not a practical scenario for mailers. The Postal Service agrees that the standards for combined package services mailings should include the preparation of overflow sacks and have incorporated the preparation of overflow sacks into the standards in E753. Preparation of overflow sacks will be available both for sacked mailings and for mailings prepared on pallets.

This commenter also believed that irregular parcels were required to be prepared in packages under the Combined Package Services option in DMM E753. This commenter also questioned why irregular parcels were required to be packaged in 5-digit sacks as he believes there appears to be no operational reason for preparing irregular parcel in packages when they are in 5-digit containers. The Postal Service has clarified that packaging is not required for preparation of Combined Package Services mailings under DMM M753. In addition, the Postal Service has added an option to DMM M722 that will allow Presorted Bound Printed Matter irregular parcels prepared in 5-digit sacks to be prepared loose in sacks without packaging if the minimum package size requirement is met and the pieces are individually wrapped or enveloped.

This commenter also pointed out an omission in the wording of proposed DMM E753.2.1a(3). This section of the DMM has been revised in the final rule.

*8. Parcel Post (Including Parcel Select)*

Two commenters expressed concern that there would be inconsistencies in acceptance practices from location to location because of the proposed new nonmachinable surcharges for intra-

BMC rate and DBMC rate parcels. These commenters stated that the inconsistencies could be caused by differences in how parcels will be measured at different acceptance points around the country. The commenters suggested training for acceptance personnel and a transition period for application and compliance with new standards. Postal Service acceptance personnel will receive training on the new provisions in this final rule including the new nonmachinable surcharges for intra-BMC rate and DBMC rate nonmachinable parcels. Postal employees will use the procedures currently in effect for determining if an inter-BMC parcel is nonmachinable when determining whether the nonmachinable surcharges apply to intra-BMC rate and DBMC rate parcels. The Postal Service will make every effort to ensure a smooth transition into new procedures. However, no transition or grace period for application of the nonmachinable surcharges can be granted.

One commenter indicated that use of the term ''Parcel Post'' in proposed DMM E711.2.2g pertaining to the barcoded discount was incorrect and that this term should be changed to ''Parcel Select.'' The term Parcel Post used in the DMM encompasses all rate categories of Parcel Post including the destination entry rates, which have been named Parcel Select. DMM E E711.2.2f in this final rule now contains the provisions for the barcoded rate. This section has been amended to show that the barcoded discount and its applicable 50-piece minimum mailing requirement applies to all Parcel Post rate categories, including Parcel Select.

One commenter pointed out that Exhibit E711.2.2, BMC/ASF Service Areas, that is used to determine eligibility for intra-BMC rates had not been updated to move ZIP Code 893 from the Salt Lake City ASF to the Los Angeles BMC. This change was published in Postal Bulletin 22038, November 30, 2000.

*9. Bound Printed Matter*

One commenter expressed support for the change to ancillary service marking requirements for Bound Printed Matter.

Two commenters stated they were opposed to the proposed requirement to restrict DDU rates to carrier route mail. One of these commenters, a mailer association, indicated that the proposed rule requirement that Bound Printed Matter pieces would be eligible for destination delivery unit (DDU) rates only if prepared as part of a Carrier Route Bound Printed Matter mailing appears to be a ''classification'' rather than a regulatory change. This commenter indicated there was nothing in the Postal Service's proposal to the PRC that indicated the DDU discount would be limited to carrier route mail. The commenter indicated its belief that the Postal Service overstepped its regulatory authority by adding such a limit to the DDU rate. Another commenter indicated that this requirement does not make sense and would add to costs for both the mailer and the Postal Service.

The Postal Service submits that the proposed rule did not prohibit all Presorted Bound Printed Matter from obtaining DDU rates. The proposed restriction applied only to flat-size pieces at Presorted rates. This restriction contained in the proposed rule is consistent with the Postal Service's treatment of flat-size mail of other classes for eligibility for DDU rates. Currently, Standard Mail and Periodicals must be sorted to carrier route to obtain DDU rates. Furthermore, the Drop Shipment file also directs mailers to the delivery unit where the carrier is located that will deliver the flats. This assumes that the mailer must know the carrier route for flat-size mailpieces. This restriction was proposed in order to give the USPS the ability to process Presorted rate flat-size mail to carrier routes on Flat Sorting Machines at the plant, rather than manually sorting it to carrier routes at the delivery unit.

However, the Postal Service has reconsidered this requirement. The final rule will provide that flat-size pieces of Presorted Bound Printed Matter may qualify for the DDU rates provided each piece weighs over one pound, the pieces are sorted in 5-digit sacks, or on optional 5-digit scheme or required 5-digit pallets, or prepared as bedloaded 5-digit packages. 5-digit containers or in bedloaded 5-digit packages, and are entered at the appropriate destination delivery unit. The Drop Shipment Product must be used to determine the correct destination entry facility for the 5-digit sorted flat-size Presorted Bound Printed Matter. If the Drop Shipment Product lists multiple facilities for a single 5-digit ZIP Code, the mailer must inquire about the correct drop site when contacting the DDU to schedule an appointment. Mail weighing over one pound is less likely to be worked on AFSM 100s and is not processed on FSM 881s. Heavier mail that is directed to an FSM 1000 is less likely to be processed to carrier routes on the FSM at the current time, although that may change after full deployment of AFSM 100s. Therefore, allowing DDU rates currently makes sense for these heavier flats. However, the Postal Service will reassess this decision when it receives the results of the AFSM 100 machinability tests.

One commenter opposed the elimination of the marking ''Presorted Standard'' on Presorted Bound Printed Matter. This mailer has a customer that currently uses the ''Presorted Standard'' marking in the permit imprint indicia of pieces mailed at both Standard Mail (A) and Standard Mail (B) rates. For the portion of the mailing that is split off into a Standard Mail (B) mailing, the mailer ink-jets the ''Bound Printed Matter'' marking on the mailpieces directly to the left or below the permit imprint indicia. The Postal Service understands the concerns of the customer in question. However, the Postal Service In-Office Costing System relies heavily on such markings to appropriately attribute costs to classes and subclasses of mail. Having markings indicating two different classes of mail on the same mailpiece is potentially confusing to data collectors and could result in inaccuracies in data collection. Instructions as to which marking overrides the other would be possible but adds a level of complexity to an already complex system. Furthermore, such dual markings are also confusing to delivery unit employees and Computerized Forwarding System (CFS) employees who rely on such markings to correctly handle and process undeliverable-as-addressed mail. Accordingly, the Postal Service is retaining the prohibition against using the ''Presorted Standard'' marking on Presorted Bound Printed Matter. Mailers are reminded that they will have until January 1, 2002, to discontinue use of the ''Presorted Standard'' (or ''PRSRT STD'') marking.

One commenter disagreed that Bound Printed Matter weighing less than 1.5 pounds should be charged the rate equal to a piece weighing 1.5 pounds. This commenter recommended a piece-pound calculation be used so that a 1-pound item would be the minimum. The Postal Service will not adopt this suggestion. The instructions in the proposed rule for calculating rates do not differ from the current requirements for calculating Bound Printed Matter rates in DMM P013.5.0. It should be noted that the 1.5-pound weight category is contained in the single-piece rate Bound Printed Matter rate chart. The PRC recommended adding rate cells for pieces weighing not more than one pound to this rate schedule. The 1-pound rates that the PRC recommended are the same as the rates for the 1.5-pound weight cells. Furthermore, the column heading for the weights in rate

schedule 522A, Domestic Mail Classification Schedule and in DMM R700 is ''Weight not Exceeding (pounds).'' This means that all mail that does not exceed the first weight category on the schedule pays rates shown for the first weight category. A piece and pound calculation is not performed for single-piece Bound Printed Matter.

One commenter supported the change to the handling of undeliverable-as-addressed Bound Printed Matter pieces that are not mailed with a special service or an ancillary service endorsement that will make it the same as for Standard Mail. This change provides that undeliverable-as-addressed (UAA) Bound Printed Matter pieces mailed with no special service (*e.g.,* Delivery Confirmation, insured), and with no ancillary service endorsement, will be disposed of by the USPS as waste at the delivery unit. Mailers of Bound Printed Matter who want to have their UAA pieces forwarded and returned must choose the appropriate ancillary service endorsement for the service they desire. Handling of mail for each ancillary service endorsement is in DMM F010. The commenter indicated that this change will allow catalog mailers that generally mail as Standard Mail to mail heavier catalogs, over one pound, without applying the ancillary service endorsement. This commenter indicated the previous requirement was confusing and sometimes costly for such mailers, who had no option for disposing of pieces.

One commenter suggested that packaging should not be required for Presorted Bound Printed Matter irregular parcels prepared in 5-digit sacks. The Postal Service has added to the final mail preparation standard the option of forgoing packaging provided the pieces in the sack meet the minimum packaging volume and the pieces are individually wrapped or enveloped.

Three commenters expressed concern regarding the proposed elimination of the bedloaded bundle preparation option for Bound Printed Matter. One of these commenters suggested that the Postal Service allow customers to continue bedloading on an exception basis or ''grandfathering'' of existing products because a transition to product palletization will require major changes in some mailer facilities. Another commenter also indicated they had a client that currently bedloads bundles for which the required pallet preparation would be costly, slow down their production process, and require at least until March or April, 2002 to install. That commenter requested that the Postal Service waive the requirements for this customer. The third commenter also indicated that requiring palletization for DSCF or DBMC rates would incur large costs to mailers and that they were not convinced the benefits to the Postal Service would be commensurate. This commenter requested that the Postal Service design a bedloaded entry option for DSCF or DBMC entry that would be subject to strict scheduling, advance notice and other requirements that would permit maximum Postal Service efficiency.

The mail preparation standards that were set forth in the proposed rule are designed to lower the Postal Service costs of handling Bound Printed Matter. Generally, bedloaded packages or bundles of Bound Printed matter are not machinable on BMC parcel sorters and are not cost-efficient for the Postal Service to handle and process. The requirement to sack or palletize mail is designed to enable more mail to be processed on sack sorters and to enable pallets of mail to be cross-docked at BMCs and processing plants, thereby reducing the number of individual piece handlings of Bound Printed Matter. The Postal Service believes that permitting bedloaded packages only when the mail is entered by the mailer at the destination delivery unit for the DDU rates is critical to lowering the overall costs of processing Bound Printed Matter. Accordingly, the sortation requirements in the final rule retain the restriction on bedloaded packages to mail prepared for the DDU rates. The Postal Service will work with mailers on a case-by-case basis to develop interim solutions for those who need time to convert their operations to pallet preparation.

One commenter indicated that lowering the maximum package weight for Bound Printed Matter on pallets from 40 pounds to 20 pounds will create production throughput problems because they will now be able to place only four catalogs in each package. This commenter indicated that this will require slowing their production lines to allow the production of the additional packages.

The Postal Service proposed the 20-pound maximum package size to allow packages to be handled on Small Parcel and Bundle Sorters (SPBSs). As indicated above, most packages of Bound Printed Matter are not prepared to withstand handling on BMC parcel sorting equipment. If packages exceed 20 pounds they cannot be processed on SPBSs. Allowing heavier packages would result in the Postal Service having to process such packages manually at a greater cost than mechanized processing. These costs are eventually reflected in the rates. Accordingly, the Postal Service is retaining the 20-pound package limit in the final rule, except that the following packages have a maximum weight limit of 40 pounds: (1) Carrier route packages in sacked mailings, (2) 5-digit packages in 5-digit sacks, (3) carrier route packages of flats on 5-digit scheme carrier routes or 5-digit carrier routes pallets, (4) carrier route packages of irregular parcels on 5-digit pallets, (5) 5-digit packages of flats on 5-digit scheme pallets, (6) 5-digit packages of flats or irregular parcels on 5-digit pallets, and (7) carrier route bedloaded packages or 5-digit bedloaded packages prepared for the DDU rate.

*10. Special Services*

The Postal Service received two comments related to special services. One commenter supported the proposal to allow mailers to add special services to Standard Mail (formerly Standard Mail (A)) pieces. Another commenter supported the proposal to add a new ''high-volume'' category for Qualified Business Reply Mail.

**D. Summary by DMM Module of All R2000–1 Revisions**

The following are changes organized by DMM module. They are intended as an overview only and should not be viewed by readers as defining every revision.

**Global Name Changes**

Throughout the DMM sections included in this document, the following name changes have been made:

1. ''Special Standard Mail'' has been changed to ''Media Mail.''
2. ''Standard Mail (A)'' has been changed to ''Standard Mail.''
3. ''Standard Mail (B)'' has been changed to ''Package Services.'' Package Services includes all of the Standard Mail (B) subclasses: Parcel Post (including Parcel Select), Bound Printed Matter, Media Mail, and Library Mail.

In addition, the current DMM 600 series, which contains combined rules for Standard Mail (A) and Standard Mail (B), has been split into a 600 series for Standard Mail and a 700 series for Package Services. Within these new series, individual units and sections have been split up and reorganized for clarity. Current DMM P700, which contains standards for special postage payment systems, is renumbered as P900. Throughout the language in the DMM, references to ''Standard Mail'' have been retained as ''Standard Mail''

or changed to ''Package Services'' or ''Standard Mail and Package Services,'' as appropriate.

**A Addressing**

A010 is amended to change DMM references to reflect new DMM module numbering. A060.1.4 is amended to incorporate new requirements for preparation of Bound Printed Matter mailings with DALs because of the elimination of local zone rates. Also, it is clarified that mailings made with DALs may not contain any special services or an ancillary service endorsement. A new A060.1.7 is added to exclude DALs on special services mail. A910.2.2 is amended to show that the minimum fee ($7.50) for correcting a mailing list applies to lists with fewer than 30 names or addresses.

**C Characteristics and Content**

C010 and C020 are revised to reflect new DMM module numbering. C050 is revised to decrease the machinable parcel minimum piece weight from 8 ounces to 6 ounces, to clarify that packaging requirements for soft goods may be found in C010, and to clarify that each destinating BMC manager may authorize the entry of parcels as machinable rather than as irregular if they are tested for machinability and are delivered within the service area of the authorizing facility. C200.5.0 is added to specify size and weight limitations for Periodicals. C600 is revised to delete sections 1.3 and 2.0, which pertain to Package Services. Those sections have been moved to new C700. C700 is added to include characteristics and content standards for Package Services (former C600.1.3 and 2.0 are included in this new section). C700.2.0 is amended to provide for the addition of new nonmachinable surcharges for intra-BMC and Parcel Select DBMC parcels, and to include the criteria for nonmachinability from E630.1.4. C810.2.3 is added to include instructions for determining the length and height for automation letters. C810.2.4 (former C810.2.3) is amended to provide for the revised maximum weight of 3.3 ounces for heavy letters. C840.3.0 is revised to include new requirements under which mailers may submit flat-size automation rate mailings in which pieces contain two POSTNET barcodes.

C850 is amended to add Standard Mail machinable parcels as items eligible for barcoded discounts. C850.1.4 is amended to include information about barcodes for Signature Confirmation service.

**D Deposit, Collection, and Delivery**

D210 is revised to provide for DDU rate eligibility for Periodicals mail entered under exceptional dispatch authorizations. The change will limit DDU rates under exceptional dispatch to mail destined to zones 1 and 2 and will provide a restriction on eligibility to publications with circulation of 25,000 and under.

D600 is revised to remove information pertaining to Package Services, to add information about deposit of mail under plant-verified drop shipment procedures, and to clarify language. D700 is added to include deposit information for Package Services (formerly contained in D600).

D910.1.5 is amended to clarify that post office box customers must pay the correct fee for the box service they receive. D910.1.7 is added to clarify that post office box service is provided in 6-month increments. D910.1.8 (formerly D910.1.7) is amended to add information about the new key duplication fee and the new lock resetting fee. D910.3.1 is amended for clarity. D910.3.7 is amended to clarify that a post office box may not be used when the primary purpose is to have the Postal Service redirect or transfer mail to another address. D910.4.1 is amended to change the basis of post office box fees. D910.4.3 is deleted to remove references to fee groups; subsequent sections are renumbered. Renumbered D910.4.3 is amended to specify the conditions under which post office box fees can change. D910.4.4 is amended to clarify when post office box fees must be paid. D910.4.7 is amended to show that the exception for payment periods is applicable to all offices with fewer than 500 post office boxes, regardless of fee group. D910.5.1 is amended to explain the new system for grouping ZIP Codes into fee groups. D910.5.2 and 5.3 are amended to clarify the conditions under which a customer could qualify for free (Group E) post office box service. Exhibits D910.5.3a and 5.3b are deleted because of the change to a new fee system. D910.6.1 is amended to clarify how refunds for post office box fees are calculated. D910.7.0 is revised to include the new fee for replacement or duplicate keys and the new fee for replacing post office box locks.

D920.1.4 is amended to move information about reserved caller numbers into new D920.1.5. D920.3.4 is amended to clarify that caller service may not be used when the primary purpose is to have the Postal Service redirect or transfer mail to another address. D920.4.0 is amended and Exhibit 4.1 is deleted to remove references to caller service fee groups. D920.4.2 is amended to clarify that reserved number fees are not refundable. D920.4.3 is amended to remove references to deleted sections. D920.4.5 is amended to clarify the payment periods for caller service. D920.4.8 is amended to show that the exception for payment periods is applicable to all offices with fewer than 500 post office boxes. D920.5.1 is amended to clarify how refunds for caller service fees are calculated. D920.5.3 is added to show that the reserve number fee is not refundable.

**E Eligibility**

Throughout the E module, references to ''Regular'' are changed to ''Outside-County,'' as appropriate. E010.1.4 is amended to change references from ''C600'' to ''C700.'' E010.1.6 is amended to add clarity to the first sentence. The first sentence of E020.1.4 is added to clarify that Express Mail cannot be sent through the Department of State. E020.2.3 is amended to show that Signature Confirmation is not available for mail sent through the Department of State. E040.4.1 is amended to change references from ''C600'' to ''C700.'' E060 5.3 is amended to reflect the current requirement for a ''Parcel Post'' rate marking for single-piece rate Parcel Post. E060.10.1 is amended to clarify standards for penalty reply mail. E060.11.1 is amended to add QBRM as an option for penalty business reply mail and to clarify when the annual accounting fee is paid. E060.12.1 is amended by adding a reference to S923. A new E060.12.2 is added to clarify how penalty merchandise return service (MRS) parcels are charged postage and fees. A new E060.12.3 is added to require MRS permit holders to pay an annual accounting fee. E060.12.7c is added to indicate where the recommended rate marking should appear on the MRS label. E060.12.8 is amended to clarify standards for permit holders who choose to add insurance to MRS parcels. E060.12.9 is renumbered as E060.12.10, and new E060.12.9 is added to allow senders to add insurance to MRS parcels at their own discretion and expense. E070.4.2 is amended to change the reference from ''E600'' to ''E700.'' E070.6.2 is revised to specify that if Presorted rates are claimed for both Media Mail and Bound Printed Matter, the mail must be prepared under the standards for Bound Printed Matter in M722.

E120.2.4 is revised to add provisions for a new minimum Priority Mail rate for pieces weighing 1 pound or less, and to add information on rates applicable to keys and identification devices.

E130.2.2 is revised to clarify the fee for keys and identification devices. E130.2.3 is relocated to M110.1.0. E140.2.2 and E140.2.3 is revised to add separate 5-digit (optional) and 3-digit (required) rate eligibility requirements for automation flats. E150.2.0 is amended by removing the last sentence. E150.3.3 is amended by adding a quarterly QBRM fee under E150.3.2c.

E211.13.1 is amended by revising 13.1d(3) to reference the preferred rate discount. E211.13.2 is amended to clarify that no fee is charged if reentry is only to change eligibility to preferred rates or the preferred rate discount. E211.14.0 has been revised and renumbered as E217.1.0. E212.2.4 has been revised and renumbered as E217.4.0. E215.2.3 is amended by adding references to Preferred rate discount and clarifying qualification categories. New E215.2.4 is added for Publications of Institutions and Societies. E215.2.7 is amended by replacing the second sentence and deleting the third sentence. A new E217 is created that describes and clarifies basic rate eligibility standards for Periodicals including the new preferred rate discount for Nonprofit and Classroom publications that provides a 5% discount on total Outside-County postage, excluding the postage for advertising pounds. E250 is revised to incorporate changes that provide for DDU rates for Periodicals mail entered under exceptional dispatch authorizations. E270 is amended by removing 1.0 and 6.0 and renumbering 2.0 through 9.0 as 1.0 through 7.0 and replacing in 1.0 the word ''RATES'' with the word ''ELIGIBILITY.'' Removing the word ''rates'' and replacing the reference 3.0 and 4.0 as 2.0 and 3.0 amends renumbered E270.1.1. Removing the word ''regular'' amends renumbered E270.1.3. E270.1.4 is removed. Replacing the word ''RATES'' with the word ''ELIGIBILITY'' amends renumbered E270.2.0 and 3.0. Sections E270.2.1 and E270.2.2 are amended by replacing the reference ''3.3 through 3.10'' with ''2.3 through 2.10.'' Removing the word ''regular'' in the last sentence amends renumbered E270.4.0. E270.5.1 is amended by adding a new first sentence clarifying that the Preferred rate discount is available only after USPS authorization. E270.5.5, Rate Anomaly, renumbered as E270.4.5 is removed. In renumbered E270.5.0, 5.1 is removed and E270 5.2 and 5.3 are renumbered as 5.1 and 5.2. Renumbered E270.5.1 is amended by adding a new first sentence describing the Preferred rate discount and revising the second sentence applicable to authorization procedures for Nonprofit and Classroom publications. Adding reference to preferred rate and replacing ''Regular Periodicals'' with ''Outside-County'' amends renumbered E270.6.1 and E270.6.2. Renumbered E270.7.4 is amended by replacing ''Regular'' with ''Outside-County,'' and the reference ''9.5'' with ''7.5.''

E611 is amended to provide basic eligibility requirements for only Standard Mail and is renumbered as E610. E610.1.0 is amended to show that Standard Mail no longer includes matter previously referred to as Standard Mail (B) or fourth-class mail, and adds the weight limit from former E612.1.0. E610.4.6 is removed because this section is no longer needed since all Package Services mail may now weigh less than 16 ounces. E610.5.0 (formerly E612.4.0) is amended for clarity and incorporates a revised maximum limit for minimum per piece rates. E610.5.4 is added to provide for the barcoded rate for machinable parcels. E610.5.5 is revised to provide for separate residual shape surcharges for Presorted rates and for Enhanced Carrier Route rates. E612.4.9 is renumbered as E610.8.0, is amended for clarity to provide for use of detached address labels. E610.5.6 (previously E612.4.4) is amended to provide for the residual shape surcharge and to include the first sentence of previously numbered E612.4.5. Former E612.4.5 is deleted. Renumbered E610.5.6 (previously E612.4.4) is amended to remove the reference to 4.6, to delete ''bulk'' and to change ''pound rates'' to ''piece/pound rate.'' E612 is removed and, except as noted above, its information added to new E610. E620 is amended to remove information pertaining to Enhanced Carrier Route Mail, and to add new 4.0, which contains standards for the machinable parcel barcoded discount. E630 is revised to contain the eligibility criteria for Enhanced Carrier Route Standard Mail. (Information in former E630 has been moved to new E700.) E640 is amended to replace ''Standard Mail (A)'' with ''Standard Mail'' and to replace ''E611 and E612'' with ''E610.'' E650 contains the contents of previously numbered E651 and has been amended to change references from ''E611 and E612'' to ''E610.'' E670 is amended to change ''P750'' to ''P950''.

A new E700 is created for Package Services as part of the restructuring to establish separate modules for Standard Mail and Package Services mail. A new description has been added above E710 to match the description in the new E610 section. The appropriate provisions of former E611 and E613 are renumbered as the basic standards in E710. Former E613.1.0 is renumbered as E710.1.2 and amended to reflect that minimum weights for subclasses of Package Services mail have been eliminated. Provisions in former E630.1.0 are renumbered as E711 (Parcel Post). E711.2.3 is revised to clarify that certain parcels mailed at a balloon rate may be subject to a nonmachinable surcharge. Provisions in former E630.2.0 are renumbered as E712 (Bound Printed Matter). Provisions in former E630.3.0 and E630.4.0 (Special Standard Mail) are renumbered as E713 (Media Mail). The definition of a full sack is revised in E713 to eliminate the 1,000 cubic inch volume sacking criteria. Provisions in former E630.5.0 and E630.6.0 are renumbered as E714 (Library Mail). The definition of a full sack is revised in E714 to eliminate the 1,000 cubic inch volume sacking criteria. Provisions in former E630.7.0 are renumbered as E715. Former E630.1.4, that contains the description of items subject to Parcel Post nonmachinable surcharges, is renumbered and moved to C700.2.0. E652 is renumbered as E750 for destination entry Package Services mail. E751.4.4 and 4.5 are revised to clarify that an exception to the appointment requirement exists for destination entry shipments containing 100 percent Periodicals or shipments of perishables. E752 is created that contains the eligibility requirements for Bound Printed Matter destination entry discounts. An annual destination entry fee for mail entered at destination entry rates is added. E752 also explains Destination Entry Mail Preparation when mailing under plant-verified drop shipment (PVDS). E753 has been added to provide for the combining of Package Services parcels in 5-digit sacks (E753.2.0) and on 5-digit pallets (E753.3.0) for destination entry at the SCF and DDU levels if also presented with an approved manifest. Sacks containing at least 10 combined pieces or a combined weight of 20 pounds and pallets having at least 50 combined pieces and a combined weight of 250 pounds of mail, or 36 inches of mail, will be allowed. BPM parcels claimed at a Carrier Route rate may not be combined with the other Package Services parcels under E753.

**F Forwarding and Related Services**

F010.4.5 is amended to add that Standard Mail with insurance is forwarded and returned and to show that registered items are given registered service while they are being forwarded or returned. F010.4.6 is added to make the standards for undeliverable metered mail in this module consistent with standards elsewhere in the DMM.

F010.5.3g is added and the chart in F010.5.3 is amended to prohibit the use of the ''Change Service Requested'' endorsement on Standard Mail with special services. F010.5.4c is added and the chart F010.5.4 is amended to allow BPM with no ancillary service endorsement and no special service to be disposed of by the Postal Service. F010.7.4 is amended to specify that combination parcels are returned at Parcel Post inter-BMC/ASF rates.

F020.3.7 is amended to show that pieces with Delivery Confirmation and Signature Confirmation are forwarded without payment of additional special service fees. F030.2.5 is amended to give mailers participating in Shipper Paid Forwarding the option of paying forwarding charges through a postage due account. If mailers choose this option, then they must pay the annual accounting fee. F030.4.2 is amended to include information about forwarding and return of Standard Mail.

**G General Information**

G091.3.0 is amended to reflect the increase in the fee for certification of a system as functionally equivalent to Mailing Online from $100 to $125.

**L Labeling Lists**

L001 is amended to change the introductory paragraph to show that this labeling list may be used with Bound Printed Matter flats. L002 is amended to add ''and per piece'' to the rate description for Periodicals SCF rates. L004 is amended to show that it may be used with Bound Printed Matter. L601 is amended to show that packages of Bound Printed Matter irregular parcels on pallets may use this list and to show the instructions for labeling mixed BMC containers that were inadvertently omitted from the **Federal Register** published August 8, 2000 (65 FR 48385). L602 is amended to remove the term ''bundles,'' and to provide for use of this list by Bound Printed Matter machinable parcels when DBMC rates are claimed.

**M Mail Preparation and Sortation**

M011.1.3 is amended to add preparation instructions for less-than-full and overflow flat trays and to revise the preparation instructions for 5-digit/scheme carrier routes sort and 5-digit/scheme sort to provide for use of these levels of sortation with BPM flats. M012.3.1 is amended to eliminate the use of ''Library Rate'' marking effective January 1, 2002 (after which only ''Library Mail'' may be used as the marking), and to change the marking ''Special Standard'' to ''Media Mail'' (''Special Standard'' or ''SPEC STD'' may be used only until January 1, 2002). M012.3.2 is amended to add the marking ''Parcel Select.'' M012.3.3 is amended to eliminate use of the marking ''Presorted Standard'' instead of ''Presorted'' with Presorted BPM effective January 1, 2002 (after which only ''Presorted'' and ''Bound Printed Matter'' may be used), and to add use of the abbreviation ''BPM'' as an optional marking for ''Bound Printed Matter.'' M013.1.1 is updated to include a carrier route package optional endorsement line information for Carrier Route BPM. M013.2.5 is amended for clarity, to change the labeling list used for ADC sortation of BPM irregular parcels from L603 to L004, and to change the labeling list used for mixed ADC sortation from L604 to L004. M020.1.4 is amended to delete references to bundles. Current M020.1.5 and 1.6 are renumbered 1.6 and 1.7 and a new M020.1.5 is added to describe new physical preparation of BPM packages. M020.2.2 is amended to show that First-Class Mail automation flats prepared under the new tray-based preparation rules are not prepared in packages and to show that the exception in renumbered M020.1.7 also applies to First-Class Mail flats in trays. M020.3.0 is amended to show that the requirement for facing slips used to label carrier route packages applies to all classes of mail. M031.4.7 is amended to specify that the words ''CARRIER ROUTES'' must appear on 5-digit pallets of BPM only when the pallet consists entirely of irregular parcels eligible for the carrier route rate and that the words ''CARRIER ROUTES'' must appear after the ''5D'' pallet level description. M031.4.12 is amended to delete the term ''bundle.'' M031.5.0 is amended to add new abbreviations for First-Class Mail and Package Services mail. Exhibit M032.1.3a is amended to reflect changes in the content line and CIN numbers of Package Services sack labels. M033.1.2 is amended to clarify that lids on First-Class flat trays must be placed on the trays green side up. M033 is amended to provide for less-than-full and overflow trays for First-Class Mail automation rate mailings prepared under the new tray-based option.

M041.5.6 is amended to require for flat-size BPM that Presorted rate mail must be placed on separate 5-digit pallets (5-digit scheme and 5-digit pallets) from Carrier Route rate mail (5-digit carrier routes or 5-digit scheme carrier routes pallets) and to remove references to palletized bundles. M045.2.0 is revised to clarify requirements and to revise the package minimums, maximums, and physical packaging requirements for BPM. Current M045.3.0, which provides for optional preparation of bundles on pallets for Periodicals and Standard Mail, is deleted. M045.4.0 (as set forth in the final rules published in 65 FR 50054 (August 16, 2000)) is renumbered as M045.3.0. M045.3.0 is amended to provide for separate pallet preparation requirements for BPM flats in M045.3.3 and for irregular parcels in M045.3.4, to renumber the remainder of that section, and to revise the class abbreviation on the contents lines for Package Services mail from ''STD'' or ''STD B'' to ''PSVC.'' M045.3.5 (M045.4.4 as set forth in the final rule published in 65 FR 50054 (August 16, 2000)) is revised to provide for DBMC rates for Bound Printed Matter and to revise line 2 pallet labels to show ''STD'' instead of ''STD A'' and to show ''PSVC'' instead of ''STD B.'' M045.3.6 (M045.4.5 as set forth in the final rule published in 65 FR 50054 (August 16, 2000)) is revised to change the line 2 pallet labels from ''STD'' or ''STD B'' to ''PSVC.'' M045.5.0 through M045.15.0 (as set forth in the final rule published in 65 FR 50054 (August 16, 2000)) is renumbered as M045.4.0 through M045.14.0. Renumbered M045.6.4 and M045.9.2 are amended by changing the reference ''M630'' to ''M710 or M720.'' Renumbered M045.10.0 and 11.0 are amended by changing ''STD'' or ''STD B'' to ''PSVC.'' Renumbered M045.12.1 is amended to change ''M630'' to ''M710,'' to change the pallet label contents lines class abbreviation from ''STD B'' to ''PSVC,'' and to add ''PARCELS'' after the class abbreviation. Renumbered M045.12.2 is amended to change ''M630'' to ''M710,'' to change the pallet label contents lines class abbreviation from ''STD B'' to ''PSVC'' and to add ''PARCELS'' after the class abbreviation. M045.12.3 is amended to change ''Exhibits E652.7.0 and E652.8.0'' to ''Exhibits E751.7.0 and E751.8.0.'' M045.12.4 is amended to change ''E652.6.0'' to ''E751.6.0.'' M045.13.0 is amended to change ''M630'' to ''M710'' and to change the class abbreviation on the contents line of the pallet label from ''STD B'' to ''PSVC.'' M045.14.0 is amended to change the pallet label contents lines class abbreviation from ''STD B'' to ''PSVC,'' and to add ''PARCELS'' after the class abbreviation. M072.2.4 is amended by changing ''P710, P720, or P730'' to ''P910, P920, or P930,'' and by changing ''E652'' to ''E751.'' M073.2.3 is amended to change ''P710'' to ''P910.''

M110 is added to show the preparation requirements for single-piece First-Class Mail formerly located in E130.2.3.

M610.6.0, which provided for preparation of Standard Mail bedloaded bundles, is deleted. M620.1.1a is amended by changing ''E620'' to ''E630.'' M630.1.0, pertaining to Parcel Post, is renumbered in new M710.

M710.1.1 is added to describe general requirements for Parcel Post. M710.1.3 (formerly M630.1.2) is revised to show that DSCF and DDU rate mail need not be separated by zone at the time of acceptance and to change ''P710, P720, or P730'' to ''P910, P920, or P930.'' M710.1.4 (formerly M630.8.0) is added to contain standard for commingled zones. M710.1.5 contains the documentation information formerly in M630.1.3 and is amended to clarify the standards and to change ''P710, P720, or P730'' to ''P910, P920, or P930.'' M710.2.1 contains standards, formerly in M630.1.4, that are amended by changing the reference ''1.5'' to ''2.2,'' by changing ''Exhibit E652.6.0'' to ''Exhibit E751.6.0,'' and by changing the reference ''Exhibit E652.7.0 and Exhibit E652.8.0'' to ''Exhibit E751.7.0 and Exhibit E751.8.0.'' M710.2.2 (formerly M630.1.5) contains standards that are amended to replace ''STD B 5D'' on the contents line of DSCF 5-digit sacks with ''PSVC PARCELS 5D.'' M710.4.0 (formerly M630.6.0) is added to contain provisions for preparation of machinable parcels and is amended to show that this preparation is optional for Parcel Post. M720 (formerly M630.2.0 and 3.0) is added to contain standards for BPM. M721 contains the preparation standards for single-piece rate BPM. M722 contains the preparation standards for Presorted BPM. M722.2.0 contains new packaging and sacking requirements for Presorted BPM flats, including new line 2 sack labeling requirements that change the abbreviation ''STD B'' to ''PSVC.'' M722.3.0 contains new packaging and sacking requirements for Presorted BPM irregular parcels weighing less than 10 pounds, including a requirement to use L004 instead of L603 for preparation of ADC sacks, to use L004 instead of L604 for mixed ADC sacks, and new line 2 sack labeling requirements that change the abbreviation ''STD B'' to ''PSVC.'' M722.3.6 contains a provision to allow preparation of bedloaded 5-digit packages of Presorted BPM irregular parcels weighing up to 40 pounds when prepared for and entered at DDU rates. M722.4.0 contains preparation requirements for Presorted BPM irregular parcels weighing 10 or more pounds. M722.4.1 prohibits packaging of such pieces and requires that each individual piece must be enclosed in an envelope, full-length sleeve, full-length wrapper, or polywrap before being placed in sacks. M722.4.2 through M722.4.4 contains sacking requirements for Presorted BPM irregular parcels weighing 10 or more pounds including a requirement to use L004 instead of L603 for preparation of ADC sacks, to use L004 instead of L604 for mixed ADC sacks, and new sack labeling requirements that change the abbreviation ''STD B'' to ''PSVC.'' M722.4.5 contains a provision to allow preparation of bedloaded 5-digit packages of Presorted BPM irregular parcels weighing up to 40 pounds when prepared for and entered at DDU rates. M722.5.0 contains provisions for preparing Presorted BPM machinable parcels. These provisions eliminate the 1,000 cubic inch sacking minimum option, provide for preparation of an ASF sack when DBMC rates are claimed, and change the line 2 sack labeling class abbreviation from ''STD B'' to ''PSVC.'' M723 is added that contains the provisions for preparing Carrier Route BPM. M723.2.0 contains the preparation requirements for Carrier Route BPM flats. M723.2.1 contains new packaging requirements. M723.2.2 through M723.2.4 contains new sacking minimums, requires preparation of carrier route sacks, provides for optional preparation of 5-digit scheme carrier routes sacks for Carrier Route BPM flats and amends the Line 2 sack labels to change the class abbreviation from ''STD B'' to ''PSVC.'' M723.2.5 contains a provision to allow preparation of bedloaded carrier route packages of BPM flats weighing up to 40 pounds when prepared for and entered at DDU rates. M723.3.0 contains preparation requirements for Carrier Route BPM weighing less than 10 pounds. M723.3.1 sets forth new packaging requirements for Carrier Route BPM irregular parcels weighing less than 10 pounds. M723.3.2 through M723.3.4 contain sack preparation requirements that change the carrier route sack minimum, make it a required level of sack, and amend line 2 sack labels to change the class abbreviation from ''STD B'' to ''PSVC.'' M723.3.5 contains a provision to allow preparation of bedloaded carrier route packages of BPM irregular parcels weighing up to 40 pounds when prepared for and entered at DDU rates. M723.4.0 contains requirements for Carrier Route BPM irregular parcels weighing 10 or more pounds. M723.4.1 requires Carrier Route BPM irregular parcels weighing 10 or more pounds to be prepared only in direct carrier route sacks containing a minimum of 20 pounds of mail. M723.5.0 permits machinable parcels to qualify for Carrier Route BPM rates only if prepared in a direct carrier route sack that contains a minimum of 10 addressed pieces or 20 pounds. M730 is added to contain standards for Media Mail (formerly in M630.4.0) and is amended to reflect the subclass name change to ''Media Mail.'' M730.1.0 contains basic standards. M730.2.1 (formerly M630.4.4) contains sack and package on pallet preparation for 5-digit Media Mail rates. M730.2.1 is amended to change ''bundles'' to ''packages'' and to remove ''/1,000 cubic inches.'' M730.2.2 (formerly M630.4.5) contains sack preparation for BMC Media Mail rates and is amended to remove ''/1,000 cubic inches.'' M730.2.3 contains line 2 sack label information for Media Mail (formerly in M630.4.6) amended to change ''STD'' and ''STD B'' to ''PSVC.'' M740 is added that contains the standards for Library Mail in former M630.5.0. M740.1.0 (formerly M630.5.1 through 5.3) contains basic standards for Library Mail and is amended to discontinue use of the ''Library Rate'' marking beginning January 1, 2002. M740.2.1 (former M630.5.4) contains sack preparation requirements for the 5-digit Library Mail rates and is amended to remove ''/1,000 cubic inches'' and to change line 2 labels from ''STD'' and ''STD B'' to ''PSVC.''

M740.2.2 (formerly M630.5.5) contains sack preparation requirements for the BMC Library Mail rates and is amended to remove ''/1,000 cubic inches.'' M740.2.3 (formerly M630.5.6) contains line 2 sack label information for Library Mail and is amended to change ''STD'' and ''STD B'' to ''PSVC.''

M820.1.2 is amended to incorporate the separate rates for 5-digit and 3-digit First-Class Mail automation flats. M820.1.5 is amended to exclude First-Class Mail automation flats prepared under the new tray-based preparation rules from package preparation standards. M820.1.11 is added to prohibit combining FSM 881 and FSM 1000 mailpieces in the same tray when the new tray-based preparation option for First-Class Mail automation flats is used. M820.2.1 is amended to make preparation of 5-digit packages for First-Class automation flats optional. M820.2.2 is amended to make preparation of 5-digit trays for First-Class automation flats optional. M820.3.0 is added to provide for an optional tray-based preparation for First-Class automation flats. M910.1.2 is amended to change the reference ''M820'' to the more specific reference ''M820.2.1'' so that it is clear the mail must be packaged and must not be prepared under the new option for First-Class Mail automation flats in M820.3.0 for tray-based preparation.

**P Postage and Payment Methods**

P011.1.1 is amended by renumbering 1.1b through 1.1e as 1.1c through 1.1f and by adding new 1.1b to include prepayment conditions for merchandise return service. P011.3.3 and 3.4 are added to clarify standards for advance deposit accounts and annual accounting fees. A separate annual accounting fee must be paid for each special service deducted from the same account. P012.2.2 is amended to require tray levels and tray destinations in the body elements of the standardized documentation for the new tray-based preparation option for First-Class Mail automation flats. P012.2.3 is amended to add the rate levels and abbreviations for the new tray-based option for First-Class Mail automation flats. P013.1.4 and 1.5 are amended to show how to properly affix postage to single-piece rate mailings and other-than-single-piece rate mailings. P013.2.4 is revised to reflect the new one-pound minimum Priority Mail rate. P013.2.6 is amended to reflect that keys and identification devices weighing more than 13 ounces but not more than one pound would be charged the new one-pound rate. P013.9.0 is amended to clarify how to calculate Package Services postage for pieces with postage affixed and for pieces paid with permit imprint. P014.2.4f is amended to show that customers may receive a refund for Signature Confirmation service. P014.2.4i is amended to include standards for when the destination entry mailing fee for Package Services and Bound Printed Matter is eligible for a full (100%) refund. P014.2.11 is amended to show that the QBRM quarterly fee is not refundable. P022.1.2 is amended to show that postage due stamps cannot be used to pay postage due. P030.3.5 is amended to reflect the new categories for on-site meter service and to exclude secured postage devices from the meter service fees. P070.5.4 is amended to specify that unmarked parcels are rated at the inter-BMC/ASF postage rates. P600.4.0 and 5.0 are added to clarify payment standards for Standard Mail pieces that claim the barcoded discount or are mailed with special services. Current P700, Special Postage Payment Systems, is redesignated as P900. Current P710, P720, P730, P750, and P760 are redesignated as P910, P920, P930, P950, and P960, respectively. A new P700 is created to contain payment standards for Package Services.

**R Rates and Fees**

The entire module is revised to reflect new rates and fees for all classes of mail.

**S Special Services**

S010.2.1 is amended to show that the sender of a merchandise return service parcel may file a claim for loss if the sender has purchased the insurance.

S911.1.5 is amended to clarify the additional services that can be added to registered mail and to add Signature Confirmation as an additional service. S912.1.4 is amended to specify the additional services that may be combined with certified mail and S912.1.5 is amended to clarify the standards for a delivery record. S912.2.5a is amended to specify the form number used by customers. S913.1.2 and 1.3 are amended to show that bulk insurance may be added to Standard Mail pieces that are subject to the residual shape surcharge and to remove the required ''Standard Mail Enclosed'' marking. S913.1.5 is amended to clarify the additional services that can be added to insurance and to add Signature Confirmation as an additional service. S913.1.6 is added to clarify that customers may request a delivery record after mailing. S913.2.5 is amended to include information about integrated barcodes with Signature Confirmation and insurance. S913.4.0 is amended to change ''parcel'' to ''item.''

S914.1.1 is amended to show that certificate of mailing is evidence that mail has been presented for mailing but does not provide a record of delivery. S914.1.2, 1.3, and 1.4 are rewritten for clarity; there are no changes to these standards for bulk certificate of mailing. S914.1.7 is added to specify the additional services that may be combined with certificate of mailing.

S915.1.1 is amended to show that the return receipt is mailed back to the sender. S915.1.2 is amended to show the classes of mail that are eligible for return receipt service and the prerequisite services. S915.1.7 is added to specify the additional services that may be combined with return receipt. S915.2.2 is amended to clarify how to apply for a delivery record after mailing. S915.2.3 is added to specify the time limit for requesting a delivery record after mailing. S915.4.2 is amended to clarify how to request delivery information. S916.1.2 is amended to clarify that restricted delivery cannot be used with Standard Mail. S916.1.7 is added to specify the additional services that may be combined with restricted delivery, including new Signature Confirmation service. S917.1.1 is amended to show that the return receipt is mailed back to the sender. S917.1.2 is amended to show that return receipt for merchandise service is available for Standard Mail pieces that are subject to the residual shape surcharge. S917.1.3 is amended to specify the special services that may be combined with return receipt for merchandise. S917.2.7 is added to clarify how mailers may request a delivery record if return receipt service was not provided. S917.3.0 is amended to remove information about the delivery record.

S918.1.2 is amended to show that electronic option Delivery Confirmation is available for Standard Mail pieces that are subject to the residual shape surcharge. S918.1.3 is amended to show that Delivery Confirmation service is not available for Standard Mail cards, letters, and flats (*i.e.,* pieces that are not subject to the residual shape surcharge). The last sentence of S918.5.0a is deleted to eliminate redundancy.

New unit S919 is added for Signature Confirmation service.

S921.1.1 is amended to show the new $1,000 limit for COD and to clarify that recipients who pay CODs with cash will be charged the applicable money order fee(s). S921.1.4 is amended to specify the additional services that may be combined with COD.

Effective November 5, 2000, the Postal Service completely rewrote DMM standards for business reply mail (see Postal Bulletin 22035 (10–19–00), available via www.usps.com). This rewrite was done for clarity and consistency. Therefore, standards for business reply mail in this final rule have been reorganized to reflect the new structure of DMM units E150, P014, R900, and S922. There have been no substantive changes to these standards since publication in the proposed rule.

S922.3.3 is amended to delete the requirement that BRM permit holders maintain a unique advance deposit account just for BRM. S922.7.7 and 7.8 are added to add a new classification of high-volume qualified business reply mail (QBRM) that includes a quarterly fee and a lower per piece charge.

S923.1.1, 1.3, and 2.7 are amended to remove references to the per piece fee for pieces returned through merchandise return service (MRS). S923.1.11 is amended and 1.12 is removed to show that unmarked MRS pieces will be treated as Parcel Post. S923.2.3 is amended to clarify references to the annual accounting fee. S923.2.7 is amended to remove references to the per piece fee for items returned via merchandise return service. S923.3.0 is amended in its entirety to clarify how postage is paid on returned pieces, to remove references to the per piece charge, and to add the annual accounting fee for the required advance deposit account. S923.4.1 and 4.2 are amended to show that the sender (the

person using the merchandise return service label to return a parcel to the permit holder) may add insurance to a MRS parcel at their own discretion and expense. S923.5.6c is amended to clarify that rate markings are optional on MRS labels. All of the exhibits in S923 are amended to remove references to the per piece fee.

S924.1.1 is amended to add a sentence about payment information for Bulk Parcel Return Service (BPRS). S924.1.4 is added to show that no special services can be added to pieces sent through BPRS. S924.3.2, 3.3, and 3.4 are added to clarify the per piece charges and to describe the new annual accounting fee. S924.3.5 is added to specify that the permit holder is responsible for payment of all applicable fees. Exhibit S924.5.0 is amended to change the class marking to ''Standard Mail.'' S930.1.3 is amended to specify that Signature Confirmation service can be combined with special handling. S930.1.7 is added to clarify that the Parcel Post nonmachinable surcharge is not added to parcels sent special handling. S930.2.3 is amended to specify the additional services that may be combined with parcel airlift service (PAL).

Although exempt from the notice and comment requirements of the Administrative Procedure Act (5 U.S.C. 553(b),(c)) regarding rulemaking by 39 U.S.C. 410(a), the Postal Service hereby adopts the following amendments to the Domestic Mail Manual (DMM), which is incorporated by reference in the Code of Federal Regulations. See 39 CFR part 111.

**List of Subjects in 39 CFR Part 111**

Administrative practice and procedure, Postal Service.

## PART 111—[AMENDED]

1. The authority citation for 39 CFR Part 111 continues to read as follows:

**Authority:** 5 U.S.C. 552(a); 39 U.S.C. 101, 401, 403, 404, 414, 3001–3011, 3201–3219, 3403–3406, 3621, 3626, 5001.

2. Revise the following sections of the Domestic Mail Manual (DMM) as follows:

**A ADDRESSING**

**A000 Basic Addressing**

*A010 General Addressing Standards*

1.0 ADDRESS CONTENT AND PLACEMENT

* * * * *

[Amend 1.2 by replacing ''and Standard Mail (A), Standard Mail (B),'' with ''Standard Mail, Package Services,'' no other changes to text.]

* * * * *

[Amend 1.6 by replacing ''Standard Mail'' with ''Standard Mail, and Package Services''; and by replacing ''E600'' with ''E600, and E700'; no other changes to text.]

* * * * *

4.0 RETURN ADDRESS

* * * * *

[Amend 4.3g by replacing ''Standard Mail (B)'' with ''Package Services''; no other changes to text.]

* * * * *

*A060 Detached Address Labels (DALs)*

1.0 USE

[Amend 1.2 and 1.3 by changing ''Standard Mail (A)'' to ''Standard Mail'; no other changes to text.]

[Revise 1.4 to reflect the elimination of the local zone and to add new 5-digit preparation and entry standards to read as follows:]

**1.4 Bound Printed Matter**

Unaddressed pieces of Bound Printed Matter may be mailed with DALs when:

a. The mail is prepared on 5-digit pallets meeting the standards in M040 and M045, except that for flat-size mail separate 5-digit pallets of Carrier Route and Presorted rate mail are not required. The mail may not be prepared on pallets when the Drop Shipment Product indicates that the delivery unit that serves the 5-digit pallet destination cannot handle pallets. The destination delivery unit is determined using the Drop Shipment Product under the provisions for the DDU rate in E752. (For such delivery units, mail with DALs must be prepared in sacks.) The trays or cartons of DALs must be prepared under 3.0 and placed on the same pallet as the pieces and must be stretch-wrapped together as one unit.

b. The mail is prepared in 5-digit sacks and entered at the destination delivery unit. The destination entry unit is determined by using the Drop Shipment Product under the provisions for the DDU rate in E752. DALs must be packaged under 3.0 and presented to the destination delivery unit with the accompanying items to be distributed with the DALs.

* * * * *

[Add a new 1.7 to read as follows:]

**1.7 Special Services**

Items mailed with DALs may not be combined with any special services.

* * * * *

3.0 MAIL PREPARATION

* * * * *

[Remove 3.7 and 3.8.]

* * * * *

4.0 DISPOSITION OF EXCESS OR UNDELIVERABLE MATERIAL

* * * * *

[Amend 4.2 by adding additional restrictions to undeliverable Bound Printed Matter to read as follows:]

**4.2 Undeliverable DAL**

A DAL that is undeliverable as addressed (UAA) is handled under F010. A UAA Standard Mail or Bound Printed Matter DAL is disposed of as waste. The accompanying item is treated as specified by the mailer under 4.1.

5.0 POSTAGE

* * * * *

[Amend 5.2b by changing ''Standard Mail (A)'' to ''Standard Mail''; no other changes to text.]

[Amend 5.3 by replacing ''Standard Mail (B)'' with ''Package Services''; no other changes to text.]

* * * * *

**A900 Customer Support**

*A910 Mailing List Services*

* * * * *

2.0 FEE ASSESSMENT

**2.1 Corrections**

[Amend 2.1 to show that the minimum fee applies to lists with fewer than 30 corrections:]

The fee for correcting name and address lists or occupant lists is assessed for each name or street address on the list. Individual apartments are considered separate addresses. The minimum fee in R900 applies to lists with fewer than 30 names or addresses. (For assessing the fee, the USPS considers a list to be all the addresses sent at one time to the appropriate postal facility.)

* * * * *

**C Characteristics and Content**

**C000 General Information**

*C010 General Mailability Standards*

1.0 MINIMUM AND MAXIMUM DIMENSIONS

* * * * *

[Amend 1.3 by changing ''(see C600)'' to ''(see C700)''.]

* * * * *

*C020 Restricted or Nonmailable Articles and Substances*

* * * * *

*C023 Hazardous Materials*

1.0 GENERAL

[Amend 1.1f by replacing ''Standard Mail'' with ''Standard Mail or Package Services''; no other changes to text.]

* * * * *

*C050 Mail Processing Categories*

1.0 BASIC INFORMATION

[Amend the second sentence of 1.0 to reflect changes in class names to read as follows:]

* * * Unless permitted by standard, any mailing at other than the single-piece Express Mail, Priority Mail, First-Class Mail, or Package Services rates may not contain pieces from more than one processing category.

* * * * *

[Amend Exhibit 2.0 to show new weight limit for machinable parcels.]

* * * * *

4.0 MACHINABLE PARCEL

**4.1 Criteria**

[Amend 4.1a to decrease the minimum piece weight from 8 ounces to 6 ounces to read as follows:]

A machinable parcel (see Exhibit 2.0) is any piece that is:

a. Not less than 6 inches long, 3 inches high, ¼ inch thick, and 6 ounces in weight. (A mailpiece exactly ¼ inch thick is subject to the 3½-inch height minimum under C010.)

* * * * *

[Remove 4.1c.]

**4.2 Soft Goods**

[Amend 4.2 to include reference to C010 for packaging standards to read as follows:]

Soft goods wrapped in paper or plastic bags and enveloped printed matter weighing up to 5 pounds are machinable only if all applicable packaging standards in C010 are met.

**4.3 Exception**

[Amend 4.3 to clarify the exception authority for machinable parcels to read as follows:]

Some parcels may be successfully processed on BMC parcel sorters even though they do not conform to the general machinability criteria in 4.1. A destinating BMC plant manager may authorize a mailer to enter such parcels as machinable parcels rather than as irregular parcels if the parcels are tested on BMC parcel sorters and prove to be machinable. In addition, the following requirements must be met: all mailed pieces must be properly labeled, entered at a post office within the service area of the authorizing BMC, and bear delivery addresses located within the service area of the authorizing BMC.

* * * * *

**C200 Periodicals**

1.0 PERMISSIBLE MAILPIECE COMPONENTS

[Amend 1.3, 1.8, and 1.10 to replace ''Standard Mail (A)'' with ''Standard Mail.''']

* * * * *

2.0 IMPERMISSIBLE MAILPIECE COMPONENTS

* * * * *

**2.2 Prohibited Matter**

[Amend 2.2c to replace ''or Standard Mail'' with ''Standard Mail, or Package Services'; no other changes to text.]

* * * * *

[Amend heading and text of 2.4 by replacing ''Standard Mail (B)'' with ''Package Services''; no other changes to text.]

* * * * *

[Add new section 5.0 to read as follows:]

5.0 PHYSICAL LIMITATIONS

Periodicals mail may not weigh more than 70 pounds or measure more than 108 inches in length and girth combined. Additional size limitations apply to individual Periodicals rate categories.

* * * * *

**C600 Standard Mail**

1.0 DIMENSIONS

[Revise the heading of 1.1 to read as follows:]

**1.1 Basic Standards**

[Amend 1.1 and Exhibit 1.1d by changing ''Standard Mail (A)'' to ''Standard Mail.''']

* * * * *

*[Redesignate 1.3 as C700.1.0.]*

*[Redesignate current 2.0 as C700.2.0.]*

*[Add new 2.0 to read as follows:]*

2.0 RESIDUAL SHAPE SURCHARGE

Mail that is prepared as a parcel or is not letter-size or flat-size as defined in C050 is subject to a residual shape surcharge. There is one surcharge for mail entered at Regular and Nonprofit Presorted rates and a different surcharge for mail entered at Enhanced Carrier Route and Nonprofit Enhanced Carrier Route rates.

* * * * *

[Add new C700 as follows:]

**C700 Package Services**

[Redesignate C600.1.3 as C700.1.0 and amend the heading by replacing ''Standard Mail (B)'' with ''Package Services''; no other changes to text.]

[Redesignate C600.2.0 as C700.2.0. Insert the criteria for nonmachinability from E630.1.4 and amend to extend the nonmachinable surcharge to intra-BMC and Parcel Select-DBMC pieces to read as follows:]

2.0 NONMACHINABLE PARCEL POST PIECES

[Effective December 12, 2000, the Postal Service amended the criteria for nonmachinability (see Postal Bulletin 22038 (11–30–00), available via www.usps.com)). Those changes are reflected in the following paragraphs.]

Mailpieces described in this section and mailed at the inter-BMC/ASF Parcel Post, intra-BMC/ASF Parcel Post, and DBMC Parcel Select rates are subject to the applicable nonmachinable surcharge in R700 unless the applicable special handling fee is paid. An oversized parcel as described in 1.0c is not subject to the nonmachinable surcharge. Mailpieces are nonmachinable if they meet any of the following criteria:

a. A parcel more than 34 inches long, 17 inches wide, or 17 inches high, or weighing more than 35 pounds.

b. A parcel containing more than 24 ounces of liquid in glass containers, or 1 gallon or more of liquid in metal or plastic containers.

c. An insecurely wrapped or metal-banded parcel.

e. A can, roll, or tube, or wooden or metal box.

f. A shrub or tree.

g. A perishable such as eggs.

h. Books, printed matter, or business forms weighing more than 25 pounds.

i. A high-density parcel weighing more than 15 pounds and exerting more than 60 pounds per-square-foot pressure on its smallest side.

j. A film case weighing more than 5 pounds or with strap-type closures, except any film case the USPS authorizes to be entered as a machinable parcel under C050 and to be identified by the words ''Machinable in United States Postal Service Equipment'' permanently attached as a nontransferable decal in the lower right corner of the case.

k. Parcels with characteristics (such as inadequate packaging) that could result in damage to the contents or postal machinery if mechanical sortation is used.

[Add new 3.0 to read as follows:]

3.0 POSTAL INSPECTION

Package Services mail is not sealed against postal inspection. Package Services mail may be prepared for automated processing but must allow easy examination.

**C800 Automation-Compatible Mail**

**C810 Letters and Cards**

* * * * *

2.0 DIMENSIONS

* * * * *

[Redesignate 2.3 as 2.4; amend redesignated 2.4 by revising the maximum weight limit for heavy letters and by deleting 2.4d through f; and add new 2.3 to read as follows:]

**2.3 Determining Height and Length**

The length of an automation letter piece is the dimension parallel to the address when the address is read. The height is the dimension perpendicular to the length.

**2.4 Maximum Weight**

Maximum weight limits are as follows:

a. Upgradable Presorted First-Class Mail and Upgradable Presorted Standard Mail: 2.5 ounces (0.1563 pound).

b. Automation First-Class Mail, automation Periodicals, and automation Standard Mail: 3 ounces (0.1875 pound).

c. Automation First-Class Mail, automation Periodicals, and automation Standard Mail heavy letters, subject to 7.5: 3.3 ounces (0.2063 pound).

* * * * *

7.0 ADDITIONAL STANDARDS FOR SPECIFIC TYPES OF PIECES

* * * * *

**7.5 Heavy Letter Mail**

[Amend 7.5 by changing the reference ''2.3'' to ''2.4''; no other changes to text.]

* * * * *

*C820 Flats*

* * * * *

3.0 DIMENSIONS FOR FSM 1000 PROCESSING

* * * * *

**3.4 Maximum Weight**

[Amend 3.4 by replacing ''Standard Mail (A)'' with ''Standard Mail''; no other changes to text.]

* * * * *

*C840 Barcoding Standards for Letters and Flats*

* * * * *

2.0 BARCODE LOCATION LETTER—SIZE PIECE

**2.1 Barcode Clear Zone**

[Amend 2.1 by replacing ''Standard Mail (A)'' with ''Standard Mail''; no other changes to text.]

* * * * *

[Revise 3.0 to read as follows:]

3.0 BARCODE APPLICATION—FLAT-SIZE PIECE

**3.1 General Requirements**

On any flat-size piece claimed at automation rates, the piece may bear one POSTNET barcode under 3.2, or may bear two POSTNET barcodes under 3.3. Other mailer-applied non-POSTNET barcodes may appear on the address side of the piece if the barcode format is not detectable or confusing to automated postal equipment.

**3.2 Applying One POSTNET Barcode**

On any flat-size mailpiece claimed at an automation rate, the barcode may be anywhere on the address side as long as it is at least ⅛ inch from any edge of the piece. For FSM 1000 mailpieces, the preferred location of the barcode is at least 2 inches from the edge of the dimension that is the length for that type of automation piece (the longest edge or, for pieces with a folded or bound edge, the folded or bound edge). The portion of the surface of the piece on which the barcode is printed must meet the barcode dimensions and spacing requirements in 4.0 and the reflectance standards in 5.0. Address block barcodes are subject to the standards in 2.5a through 2.5e.

**3.3 Applying a Second POSTNET Barcode**

A second POSTNET barcode may be applied to the piece at the mailer's option only if the first POSTNET barcode on the piece is an address block barcode prepared under 3.2 that is not CASS-certified. In addition, the second barcode must meet the following requirements:

a. It must be a delivery point barcode (DPBC).

b. The preferred placement is the lower right corner of the mailpiece parallel to and in the same direction as the delivery address.

c. It must be placed at least 1 inch below the return address.

d. The space between the two POSTNET barcodes must be greater than 1 inch.

* * * * *

[Amend title of C850 by replacing ''Standard Mail (B)'' with ''Standard Mail and Package Services'' to read as follows:]

*C850 Barcoding Standards for Standard Mail and Package Services Machinable Parcels*

1.0 GENERAL

[Amend 1.1 by replacing ''Standard Mail (B)'' with ''Standard Mail and Package Services,'' and replace ''E630'' with ''E620, E720, E730, or E740''; no other changes to text.]

* * * * *

[Effective November 30, 2000, the Postal Service revised DMM C850.1.4 to include new information about integrated barcodes. See Postal Bulletin 22038 (11–30–00).]

[Amend 1.4 by replacing ''Standard Mail (B)'' with ''Standard Mail and Package Services mail'' and ''E630'' with ''E620, E720, E730, or E740.'' Amend 1.4c to add information about Signature Confirmation to read as follows:]

**1.4 Use with Delivery Confirmation and Signature Confirmation Services**

A mailer may qualify for the machinable parcel barcode discount and may apply Delivery Confirmation and Signature Confirmation barcodes provided that the requirements in E600, E700, and S900 are met and the barcode(s) is prepared in one of the following ways:

a. Separate Barcodes. Mailers may place both a postal routing code prepared under 1.0 through 4.0 and separate Delivery Confirmation and Signature Confirmation barcodes on the same mailpiece.

b. Single Concatenated Barcode. Mailers may print on the same mailpiece a single concatenated barcode that combines the postal routing code and Delivery Confirmation and/or Signature Confirmation information as follows:

(1) Only the UCC/EAN Code 128 barcode symbology may be used.

(2) The barcode must be prepared according to the barcode specifications for the UCC/EAN Code 128 in S918, S919, and Publication 91.

(3) The barcode must be prepared according to the data format requirements for concatenated barcodes in Publication 91, Appendix G, Table 25. This format contains the start code, function one code, the ''420'' application identifier, the 5-digit code of the delivery address on the mailpiece, the function one code, the ''91'' application identifier, the service type code, the customer ID, the sequential package ID, the MOD 10 check digit, the MOD 103 check digit, and the stop code. The MOD 10 check digit must be calculated using only the Delivery Confirmation barcode or Signature

Confirmation barcode elements. The function one codes, the ''420'' application identifier, and the 5-digit code of the delivery address are not included in the MOD 10 check digit calculation.

(4) Instead of the requirements in 3.0 and 4.0, mailers must use the format, placement, and human-readable information requirements found in S918, S919, and Publication 91. The human-readable numeric representation of the concatenated barcode must show the ''420'' application identifier, the 5-digit code of the delivery address, the ''91'' application identifier, the service type code, customer ID, sequential package ID, and MOD 10 check digit. The human-readable information also must include the ''USPS Delivery Confirmation'' or ''USPS Signature Confirmation'' text and identification bars.

(5) In addition to the human readable requirements in S918, S919, and Publication 91, the word ''ZIP'' must be printed to the left of the barcode in 12 point or larger sans serif type. A clear zone between the end of the word ''ZIP'' and the beginning of the barcode must be maintained. The clear zone must be no less than 10 times the average narrow bar or space element width and no more than ½ inch to the left of the barcode. A clear zone of 0.25 inch is recommended.

(6) If a mailpiece bears a concatenated barcode, then no other barcodes that appear on the mailpiece may contain the postal routing code structure (see 1.5).

(7) All barcode symbols must be printed on substrate material that preserves the optical specification as described in the AIM–USA Uniform Symbology Specification documents. Typically, white label stock commonly used for barcode generation is suitable, providing it is not glossy (causing mirror-like (specular) reflection) nor prone to smearing or smudging.

c. Integrated Barcode. An integrated barcode may be used by mailers who choose to combine Delivery Confirmation or Signature Confirmation with other special services on Priority Mail and Package Services. This option also is available for electronic option Delivery Confirmation with other special services on Standard Mail. Mailers may combine multiple services into a single barcode on the shipping label to eliminate multiple labels and barcodes on parcels. The only approved combinations are Delivery Confirmation combined with insurance and Signature Confirmation combined with insurance. Mailers printing their own barcodes and using the electronic option must meet existing specifications in S918 or S919. Two required changes are:

1. Change the text above the barcode to identify the service requested. Exhibits are included in Publication 91, Delivery Confirmation Technical Guide, November 2000 edition (which includes the addendum on Signature Confirmation and integrated barcodes.)

2. Change the service type code in the barcode to identify the class of mail and/or type of special service combined with Delivery Confirmation or Signature Confirmation. Additional information on the Service Type Code Matrix can be found in Publication 91, Delivery Confirmation Technical Guide, November 2000 edition.

* * * * *

## D DEPOSIT, COLLECTION, AND DELIVERY

### D000 Basic Information

*D010 Pickup Service*

* * * * *

2.0 POSTAGE AND FEES

* * * * *

[Amend 2.2 by changing ''R600'' to ''R700''.]

* * * * *

### D200 Periodicals

*D210 Basic Information*

* * * * *

2.0 MAIL DEPOSIT

[Amend 2.0 by replacing ''Standard Mail'' with ''Standard Mail and Package Services mail''; no other changes to text.]

3.0 EXCEPTIONAL DISPATCH

* * * * *

#### 3.2 Intended Use

[Revise 3.2 by amending the first sentence and adding a new second sentence to read as follows:]

The provision for exceptional dispatch is intended for short-haul local distribution (zones 1 and 2) of publications with total circulation of no more than 25,000 and is not to be used to circumvent additional entry standards. Applications for exceptional dispatch for publications with over 25,000 total circulation may be considered on a case-by-case basis for possible waiver of the 25,000-circulation limit.

* * * * *

#### 3.4 Destination Rates

[Revise 3.4 by changing the second sentence to read as follows:]

* * * Copies of Periodicals publications deposited under exceptional dispatch may be eligible for and claimed at the SCF rates if eligible for those rates at both the entry office from which the zone rate postage for those copies is computed and at the post office of deposit by exceptional dispatch. Copies of Periodicals publications deposited under exceptional dispatch may be eligible for and claimed at the destination delivery unit rates provided the applicable standards in E250 are met. * * *

* * * * *

### D600 Standard Mail

* * * * *

2.0 MAIL DEPOSIT

[Amend 2.0 by removing 2.1 and 2.3; redesignating 2.2 and 2.4 as 2.1 and 2.2, respectively; revising the heading and amending the contents of redesignated 2.1 to remove the term ''bulk rates,'' provide for mail entered under plant-verified drop shipment procedures, and amending the text of redesignated 2.2 for clarity to read as follows:]

#### 2.1 General

Standard Mail must be presented at the post office where the permit or license is held and the presort mailing fee is paid. Mailings must be presented at the locations and times specified by the postmaster. Plant-verified drop shipment (PVDS) mailings must be presented for verification, acceptance, and entry under P750. Plant-loaded mailings must be presented, verified, accepted, and entered as specified by the plant load agreement and applicable standards. Metered Standard Mail may be deposited at other than the licensing post office only as permitted under D072. Nonprofit Standard Mail must be presented only at post offices where the organization producing the mailing has an approved nonprofit authorization (E670).

#### 2.2 Separation of Mailings

Pieces at different rates (*e.g.,* 3/5 and basic) may be combined in the same mailing as provided in M011. Separate mailings may be reported on the same postage statement if the pieces in the mailings are in the same processing category (C050), are part of the same mailing job, and are presented for verification at the same time.

[Add new D700 to read as follows:]

### D700 Package Services

1.0 SERVICE OBJECTIVES

The USPS does not guarantee the delivery of Package Services mail (Parcel Post (including Parcel Select), Bound Printed Matter, Media Mail, and

Library Mail) within a specified time. Package Services mail might receive deferred service. The local post office can provide more information concerning delivery times within its area.

2.0 MAIL DEPOSIT

**2.1 Single-Piece Rate Mailings**

Single-piece rate Package Services mail must be deposited at a time and place specified by the postmaster or designee at the office of mailing. Metered mail may be deposited at other than the licensing post office only as permitted under D072. Permit imprint mail must be presented at the post office under P040 or P700.

**2.2 Presorted, Carrier Route, Destination Entry, and Barcoded Discount Mailings**

All presorted, carrier route, destination entry, and barcoded discount mailings must be presented for verification and acceptance at the post office where the permit or license is held. All such mailings must be deposited at locations and times specified by the postmaster or designee at the office that verifies and accepts the mailing. Plant-verified drop shipment (PVDS) mailings must be presented for verification, acceptance, and entry under P750.

Plant-loaded mailings must be presented as specified by the applicable standards and the plant load agreement. Metered mail may be deposited at other than the licensing post office only as permitted under D072.

**2.3 Zoned Rates**

Pieces paid at zoned rates must be entered at the post office from which the applicable zoned rate postage is computed unless an exception is permitted under E710.

**2.4 Drop Shipment Information**

Essential information for entering drop shipment Package Services mailings at specific postal facilities can be found in the Drop Shipment Product maintained by the National Customer Support Center (NCSC) (see G043). There is a charge for the Drop Shipment Product (E750).

**D900 Other Delivery Services**

*D910 Post Office Box Service*

1.0 BASIC INFORMATION

* * * * *

**1.5 Box Availability**

[Amend 1.5 by adding the following sentence at the end of the paragraph:]

* * * Regardless of the box size applied for, customers must pay the correct fee for the service they receive.

* * * * *

[Redesignate current 1.7 as 1.8. Add new 1.7 to read as follows:]

**1.7 Service Period**

Post office box service is provided in 6-month increments.

[Amend redesignated 1.8 to add the new key duplication fee and the lock resetting fee read as follows:]

**1.8 Fees**

Post office box fees for each 6-month period are listed in R900. Each box customer is charged a refundable deposit for post office box keys. Customers also are charged fees for duplicate and replacement post office box keys and for initiating lock changes on post office boxes.

* * * * *

3.0 CONDITIONS OF USE

[Amend 3.1 by clarifying text to read as follows:]

**3.1 Receiving Mail**

A box customer may receive through the box any mail that is properly addressed to that box number.

* * * * *

[Amend 3.7 by clarifying to read as follows:]

**3.7 Forwarding**

A post office box may not be used when the primary purpose is to have the USPS forward or transfer mail to another address free of charge.

* * * * *

4.0 BASIS OF FEES AND PAYMENT

[Amend 4.1 to change the basis of post office box fees to read as follows:]

**4.1 General**

Post office box fees are based on the size of box provided and the fee group to which the box's 5-digit ZIP Code is assigned.

* * * * *

[Remove 4.3. Redesignate 4.4 through 4.11 as 4.3 through 4.10, respectively. Amend redesignated 4.3 to read as follows:]

**4.3 Fee Changes**

A change in post office box service fees applicable to a given 5-digit ZIP Code can arise from a general fee change. In addition, the Manager, Special Services, can assign a fee group to a new ZIP Code, and may authorize the reassignment of one or more 5-digit ZIP Codes to the next higher or lower fee group if the past fee group assignments were in error. The Postal Service also may regroup 5-digit ZIP Codes. No ZIP Code may be moved more than once a calendar year and a ZIP Code may be moved only into the next higher or lower fee group. Any change in post office box service fees takes effect on the date of the action that caused the change unless an official announcement specifies another date. If post office box service fees are increased, no customer must pay the new rate until the end of the current service period, and no retroactive adjustment is to be made for a payment received before the date of the change. The fee charged is that in effect on the date of payment.

**4.4 Payment**

[Amend 4.4 to specify when post office box fees must be paid to read as follows:]

All fees for post office box service are for a 6-month period. Except under 4.6, 4.7, and 4.10, fees must be paid in advance for each 6-month period. The fee may be paid for two periods at a time (*i.e.,* up to one year in advance), but not more. The fee that must be paid is the one that is in effect on the day that the fee is paid. Fees may be paid using cash, credit or debit card, or check or money order payable to the postmaster. A mailed payment must be received by the postmaster on or before the due date.

* * * * *

[Amend the heading of 4.7 by removing ''for Group D Offices'' to read as follows:]

**4.7 Exception**

[Amend the first sentence of 4.7 by removing reference to ''Group D'' to read as follows:]

Postmasters at offices with fewer than 500 post office boxes may set April 1 and October 1 as the beginning of payment periods for box customers in their offices. * * *

* * * * *

[Amend 5.0 by revising 5.1 through 5.3 to show the new fee group assignments:]

5.0 FEE GROUP ASSIGNMENTS

**5.1 Regular Fee Groups**

Post office boxes are assigned to fee groups listed in R900 based upon estimates of the facility space for post office boxes in each 5-digit ZIP Code. Local post offices can provide information about fees for a particular ZIP Code.

**5.2 Free Box Service (Group E)**

Customers may qualify for free (Group E) post office box service if their physical address or business location meets all of the following criteria:

a. The physical address or business location is within the geographic delivery ZIP Code boundaries administered by a post office.

b. The physical address or business location constitutes a potential carrier delivery point of service.

c. The USPS chooses not to provide carrier delivery to the physical address or business location.

d. The customer does not receive carrier delivery via an out-of-bounds delivery receptacle.

**5.3 Additional Standards for Free Box Service**

Only one free (Group E) post office box may be obtained for each potential carrier delivery point of service. Eligibility for Group E boxes does not extend to individual tenants, contractors, employees, or other individuals receiving or eligible to receive single-point delivery such as delivery to a hotel, college, military installation, or transient trailer park. A customer must pay the applicable fee for each additional box requested beyond the initial box obtained at the Group E fee.

[Remove Exhibits 5.3a and 5.3b.]

6.0 FEE REFUND

**6.1 Calculation**

[Amend 6.1 to clarify fee calculations to read as follows:]

When post office box service is terminated or surrendered by the customer, the unused portion of the fee may be refunded as follows:

a. If service is discontinued any time within the first 3 months of the service period, then one-half of the fee is refunded.

b. If service is discontinued after the beginning of the fourth month of the service period, then none of the fee is refunded.

c. If service is discontinued and the customer has prepaid for the next semi-annual service period, then the entire fee for that next period is refunded.

* * * * *

[Amend the heading of 7.0 by adding reference to ''Locks'' to read as follows:]

7.0 KEYS AND LOCKS

**7.1 Key Deposit**

[Amend 7.1 to clarify that customers must pay the refundable key deposit for all keys:]

Two post office box keys are initially issued to each new box customer. Box customers must pay a refundable key deposit on each of these keys. The refundable key deposit must be paid on each additional key requested under 7.2. When box service is terminated, the key deposit is refunded to the customer for each key (including additional or replacement keys in 7.2) that is returned to the post office where the box was issued.

**7.2 Additional Key Fee**

[Revise 7.2 to add a reference to the key fee to read as follows:]

A box customer may obtain additional or replacement keys by submitting Form 1094 and paying the refundable key deposit (see 7.1) and the key fee in R900. The fee for additional or replacement keys is not refundable. Worn or broken keys are replaced without charge when returned to the post office where the box is located.

* * * * *

[Add new 7.4 to explain the lock replacement fee to read as follows:]

**7.4 Lock Replacement**

The primary box customer (box applicant) may request that the post office box lock be changed. To change the lock, the customer must first pay the applicable lock fee in R900. Lock fees are charged for replacing keyed locks and combination locks and for re-setting combination locks. Lock fees are not refundable. Customers may turn in post office box keys for the old lock and get a refund of the key deposit. Two keys are provided with the new lock, with a refundable deposit for each key charged under 7.1. Customers may obtain additional keys for the new lock under 7.2.

* * * * *

*D920 Caller Service*

1.0 BASIC INFORMATION

* * * * *

**1.4 Caller Number Service**

[Remove the last two sentences of 1.4.]

[Redesignate current 1.5 through 1.9 as 1.6 through 1.10, respectively. Add new 1.5 to read as follows:]

**1.5 Reserving a Caller Number**

Customers may reserve a caller number for future use by paying the caller number reservation fee in R900. The postmaster determines the reserved numbers and may restrict the availability of this service.

* * * * *

3.0 CONDITIONS OF USE

[Amend 3.4 by clarifying to read as follows:]

**3.4 Forwarding**

Caller service may not be used when the primary purpose is to have the USPS forward or transfer mail to another address free of charge.

* * * * *

4.0 BASIS OF FEES AND PAYMENT

**4.1 Caller Service Fee**

[Amend 4.1 by clarifying text to read as follows:]

Customers must pay the caller service fee listed in R900. The fee must be paid for each caller number or separation used, with the following exceptions:

a. If a caller uses many caller numbers but receives only a bulk delivery of mail not separated to those numbers, either because this mail is sorted to the customer's unique 5-digit ZIP Code or because sortation is made by caller name or other identification, then the caller service fee is charged only for each separation actually made. The reserved number fee is charged for each of the caller numbers to which mail received by the caller is addressed.

b. When a post office box service applicant is provided a single caller service separation because of a shortage in available post offices boxes, then the fee charged is the fee for the largest installed post office box. In this instance, neither the caller service fee nor the reserved number fee is charged.

[Remove Exhibit 4.1, Caller Service Groups.]

**4.2 Reserved Number**

[Amend 4.2 to clarify that reserved number fees are not refundable to read as follows:]

The reserved caller number fee in R900 is charged per calendar year or any part of a calendar year for each number reserved by a customer. Reserved caller number fees are not prorated.

**4.3 Fee Changes**

[Amend 4.3 by removing references to 4.1b and 4.1 to read as follows:]

A change in caller service fees (including reserved number fees) can arise from a general fee change. Any change in caller service fees takes effect on the date of the action that caused the change unless an official announcement specifies another date. If a caller service fee is increased, no customer must pay at the new rate until the end of the current service period, and no retroactive adjustment is to be made for a payment received before the date of

the change. The fee charged is that in effect on the date of payment.

* * * * *

**4.5 Payment**

[Amend 4.5 to clarify the payment periods for caller service to read as follows:]

The basic caller service fees are for a 6-month period. Fees must be paid in advance for each 6–month period. The fee may be paid for two periods at a time (*i.e.,* up to one year in advance), but not more. The fee that must be paid is the one that is in effect on the day that the fee is paid. Fees may be paid using cash, credit or debit card, or check or money order payable to the postmaster. A mailed payment must be received by the postmaster on or before the due date.

* * * * *

[Amend the heading of 4.8 by removing ''for Group D Offices'' to read as follows:]

**4.8 Exception**

[Amend the first sentence of 4.8 by removing reference to Group D offices to read as follows:]

Postmasters at offices with fewer than 500 post office boxes may set April 1 and October 1 as the beginning of payment periods for caller service customers in their offices. * * *

* * * * *

5.0 FEE REFUND

**5.1 Discontinued Number**

[Amend 5.1 to clarify when refunds can be made to read as follows:]

When caller service is terminated or surrendered by the customer, the unused portion of the fee may be refunded as follows:

a. If service is discontinued any time within the first 3 months of the service period, then one-half of the fee is refunded.

b. If service is discontinued after the beginning of the fourth month of the service period, then none of the fee is refunded.

c. If service is discontinued and the customer has prepaid for the next semi-annual service period, then the entire fee for that next period is refunded.

* * * * *

[Add new 5.3 to show that the reserved number fee is not refundable to read as follows:]

**5.3 Reserved Number Fee**

The reserved number fee is not refundable.

* * * * *

**E ELIGIBILITY**

**E000 Special Eligibility Standards**

*E010 Overseas Military Mail*

1.0 BASIC STANDARDS

* * * * *

[Amend 1.2 to change ''Standard Mail (B)'' to ''Package Services.'']

* * * * *

**1.4 Preparation**

[Amend 1.4 by changing ''C600'' to ''C700'' and by changing ''Standard Mail (B)'' to ''Package Services'' to read as follows:]

Items sent by air or surface mail are subject to the size and weight standards in C100 or C700 unless limited further by this standard. Mail must be addressed under A010. Postage at the applicable Priority Mail or Package Services rates is charged for parcels sent by air or surface transportation.

* * * * *

**1.6 Restriction**

[Amend the first sentence of 1.6 for added clarity and to refer to the new class and subclass names ''Package Services'' and ''Media Mail,'' respectively, to read as follows:]

Regardless of the postage payment method, the following types of mail weighing 16 ounces or more must be presented at a post office retail counter: all single-piece rate Priority Mail and all single-piece rate Package Services mail (Parcel Post, Bound Printed Matter, Media Mail, Library Mail).* * *

* * * * *

3.0 MILITARY ORDINARY MAIL (MOM)

[Amend 3.0 by changing ''Standard Mail'' to ''Standard Mail and Package Services.'' Amend 3.0b by changing reference to ''Standard Mail (A), or Standard Mail (B)'' to ''Standard Mail, or Package Services mail''; no other changes to text.]

*E020 Department of State Mail*

1.0 AVAILABILITY

* * * * *

[Add new 1.4 to show that Express Mail is not eligible to be mailed through Department of State Mail to read as follows:]

**1.4 Express Mail**

Express Mail may not be sent through the Department of State.

2.0 CONDITIONS FOR AUTHORIZED MAIL

* * * * *

**2.3 Special Services**

[Amend 2.3 by removing references to Express Mail, which has been moved to new 1.4, and by adding Signature Confirmation to read as follows:]

The following special services are not available for mail transmitted through the Department of State: certified, COD, Delivery Confirmation, insured, registered, restricted delivery, return receipt, return receipt for merchandise, Signature Confirmation, and special handling. If one of those services is requested on this mail, it is returned to the sender endorsed ''Service Not Available.''

* * * * *

*E040 Free Matter for the Blind and Other Handicapped Persons*

* * * * *

4.0 PREPARATION

**4.1 Basic Standards**

[Amend 4.1b by changing ''C600'' to ''C700.'']

* * * * *

*E060 Official Mail (Penalty)*

* * * * *

5.0 SERVICES, CLASSES, RATES, PREPARATION, AND DETENTION

* * * * *

**5.3 Basic Preparation**

[Amend 5.3d to require the Parcel Post marking to read as follows:]

Penalty mail must:

* * * * *

d. For all methods of payment, be endorsed for class or rate except for single-piece rate First-Class Mail not exceeding 13 ounces.

* * * * *

7.0 PENALTY METER

* * * * *

[Amend 7.7 by changing title and references from ''On-Site Setting'' to ''Meter Service'' to read as follows:]

**7.7 Meter Service**

An agency wanting on-site meter service must pay the required fee in cash or with a check when the meter is set.

* * * * *

10.0 GENERAL STANDARDS FOR PENALTY REPLY MAIL

[Amend 10.1 by deleting the last phrase in the last sentence to read as follows:]

**10.1 Restriction to Approved Formats**

An agency may distribute penalty envelopes, cards, cartons, or labels to

any person, concern, or organization. To distribute penalty reply mail, agencies must use the penalty business reply mail format, the penalty metered reply format, penalty mail adhesive stamps or penalty mail stamped stationery, or the penalty merchandise return service label.

* * * * *

11.0 PENALTY BUSINESS REPLY MAIL (BRM)

**11.1 General**

[Amend 11.1 to add QBRM as an option for penalty mailers and to clarify payment of the annual accounting fee to read as follows:]

An agency may participate in business reply mail service (including Qualified Business Reply Mail). Standards for business reply mail are in S922. Agencies can choose to pay postage and per piece charges for BRM with cash upon delivery or through an advance deposit account. If an agency chooses to pay through an advance deposit account, then it must pay an annual accounting fee, which is billed through an OMAS account. The postage, fees, and per piece charges are the same as those for private-sector customers (R900).

* * * * *

12.0 PENALTY MERCHANDISE RETURN SERVICE

**12.1 Description**

[Amend 12.1 by replacing ''Standard Mail (B)'' with ''Package Services,'' replacing ''Special Standard Mail'' with ''Media Mail,'' and adding a reference to S923 to read as follows:]

Merchandise return service allows an authorized permit holder to pay the postage and special service fees on single-piece rate First-Class Mail, Priority Mail, and Package Services (Parcel Post, Bound Printed Matter, and Media Mail) that is returned by the permit holder's customers via a special label produced by the permit holder as specified by S923.

[Redesignate current 12.2 through 12.12 as 12.4 through 12.14, respectively, add new 12.2 to show rate and fee application, and add new 12.3 to show the required accounting fee to read as follows:]

**12.2 Postage and Special Service Fees**

The standards for payment of postage and fees are:

a. The permit holder guarantees payment of the proper postage and special service fees on all returned merchandise return service articles distributed under the permit holder's permit number. Postage is collected for each article from an OMAS postage due account.

b. Returned parcels are charged single-piece rate postage and special service fees based on the class or subclass marking on the label. If a piece is unmarked, then it is charged Parcel Post rates. If the postage for the returned piece is zoned and there is no way to determine where it was sent from (i.e., no postmark or return address), then postage is calculated at zone 4 (for Priority Mail) or zone 4 inter-BMC rates (for Parcel Post).

c. There is no per piece charge per parcel returned.

**12.3 Annual Accounting Fee**

All MRS permit holders are required to pay the annual accounting fee in R900, which is assessed automatically through OMAS.

* * * * *

**12.7 Label Format**

[Amend redesignated 12.7 by changing ''Exhibit 12.5a'' to ''Exhibit 12.7a'' and ''Exhibit 12.5b'' to ''Exhibit 12.7b'' and to add new item c to indicate the location of the optional rate marking.]

* * * * *

c. Permit holders are encouraged, but are not required, to put the rate marking in the space to the right and above the ''Merchandise Return Label'' legend. The marking must be at least 3/16 inch high and be printed or rubber-stamped. Only the permit holder may apply this marking.

[Revise heading and amend content of redesignated 12.8 by clarifying to read as follows:]

**12.8 Insurance Indicated by Permit Holder**

The permit holder may obtain insured mail service with MRS. Indemnity under penalty mail merchandise return is limited to $100. Items requiring insurance greater than $100 may not be mailed under penalty merchandise return service. Only Package Services matter (i.e., matter not required to be mailed at First-Class Mail rates under E110) may be insured. Insured mail may be combined with other special services as listed in S913. To request insured mail service, the permit holder must preprint or rubber-stamp ''Insurance Desired by Permit Holder for $ (value)'' to the left of and above the ''Merchandise Return Label'' legend and below the ''Total Postage and Fees Due'' statement on the merchandise return label. The value part of the endorsement, showing the dollar amount of insurance for the article, may be handwritten by the permit holder. If insurance is paid for by the MRS permit holder, then only the MRS permit holder may file a claim (S010).

[Redesignate 12.9 through 12.14 as 12.10 through 12.15, respectively. Add new 12.9 to show that MRS senders may add insurance at their discretion to read as follows:]

**12.9 Insured Mail Added by Sender**

If the permit holder has not indicated insured mail service on the MRS label, then the sender has the option of adding insurance at the sender's own expense. There is no limit on the indemnity coverage paid for by the sender. If insurance is paid by the sender, then only the sender may file a claim (S010).

[Amend redesignated 12.10, Registered Mail, by changing ''Exhibit 12.5b'' to ''Exhibit 12.7b''; no other changes to text.]

[Amend redesignated 12.11, Special Handling, by changing ''Exhibit 12.5a'' to ''Exhibit 12.7a'' and by replacing ''Standard Mail'' with ''Package Services''; no other changes to text.]

[Remove redesignated 12.12, Parcels, and 12.13, Postage and Fees. Redesignate 12.14, Permit Cancellation, and 12.15, Later Receipt, as 12.12 and 12.13, respectively.]

* * * * *

15.0 CONTRACTORS

* * * * *

**15.2 Preparation**

[Amend 15.2a to add the term ''Package Services'' to read as follows:]

Preparation standards for a contractor's penalty mailings include the following:

a. First-Class Mail, Standard Mail, and Package Services penalty mailings must be prepared with penalty permit imprints or penalty meters. Single-piece rate mailings may also be prepared with penalty mail stamps.

* * * * *

*E070 Mixed Classes*

* * * * *

2.0 ATTACHMENTS OF DIFFERENT CLASSES

[Amend the heading and contents of 2.1 to change ''Standard Mail (A)'' to ''Standard Mail'' and ''Standard Mail'' to ''Standard Mail, or Package Services'' to read as follows:]

**2.1 First-Class Mail or Standard Mail**

Letters or other pieces of First-Class Mail or Standard Mail may be placed in an envelope and attached to the address side of a Periodicals, Standard Mail, or Package Services piece. Combination

envelopes or containers with separate parts for the two classes of mail may be used.

**2.2 Rate Qualification**

[Amend the introductory sentence of 2.2 by adding ''Package Services'' to read as follows:]

If a Periodicals, Standard Mail, or Package Services host piece qualifies for:

[Amend 2.2a through 2.2d by replacing ''Standard Mail (A)'' with ''Standard Mail''; no other changes to text.]

* * * * *

[Amend 3.2b by replacing ''Standard Mail (A)'' with ''Standard Mail''; no other changes to text.]

* * * * *

[Amend 3.3a through 3.3d by replacing ''Standard Mail (A)'' with ''Standard Mail''; no other changes to text.]

* * * * *

[Amend title of 4.0 by replacing ''Standard Mail'' with ''Standard Mail and Package Services'' to read as follows:]

4.0 ENCLOSURE IN STANDARD MAIL AND PACKAGE SERVICES PARCELS

[Amend 4.1 by replacing ''Standard Mail'' with ''Standard Mail and Package Services''; no other changes to text.]

[Amend 4.2 by replacing ''Standard Mail (A)'' with ''Standard Mail''; by replacing ''Standard Mail (B) with ''Package Services''; and by replacing ''E600'' with ''E700''; no other changes to text.]

5.0 INCIDENTAL FIRST-CLASS MAIL ATTACHMENT OR ENCLOSURE

[Amend 5.0 by replacing ''Standard Mail (A)'' with ''Standard Mail'' and by replacing ''Standard Mail (B)'' with ''Package Services mail''; no other changes to text.]

[Amend the heading of 6.0 by replacing ''Special Standard Mail'' with ''Media Mail'' to read as follows:]

6.0 COMBINED MAILING OF MEDIA MAIL AND BOUND PRINTED MATTER

[Amend 6.1 by replacing ''Special Standard Mail'' with ''Media Mail''; no other changes to text.]

[Revise 6.2 to specify that Presorted rate mail must be prepared under Bound Printed Matter standards to read as follows:]

**6.2 Presorted Rates**

Presorted rates may be claimed, subject to the applicable preparation standards. If presort rates are claimed on both subclasses, the mail must be prepared under the standards for Bound Printed Matter (M722).

* * * * *

**E100 First-Class Mail**

*E110 Basic Standards*

1.0 CLASSIFICATION AND DESCRIPTION

* * * * *

[Amend 1.2 by replacing ''Standard Mail'' with ''Standard Mail and Package Services'' and by replacing ''Special Standard Mail'' with ''Media Mail''; no other changes to text.]

* * * * *

*E120 Priority Mail*

* * * * *

2.0 RATES

* * * * *

**2.4 Keys and Identification Devices**

[Amend 2.4 by adding reference to the 1-pound rate to read as follows:]

Keys and identification devices (identification cards or uncovered identification tags) that weigh more than 13 ounces but not more than 2 pounds are returned at the applicable 1- or 2-pound Priority Mail rate plus the fee as shown in R100 if they bear, contain, or have securely attached the name and complete address of a person, organization, or concern, with instructions to return the piece to that address and a statement guaranteeing payment of postage due on delivery.

* * * * *

*E130 Nonautomation Rates*

* * * * *

2.0 SINGLE-PIECE RATE

* * * * *

**2.2 Keys and Identification Devices**

[Amend the first sentence of 2.2 by replacing ''$0.30'' with a reference to R100 to read as follows:]

Keys and identification devices (identification cards or uncovered identification tags) that weigh 13 ounces or less are mailed at the applicable single-piece letter rate plus the fee as shown in R100 and, if applicable, the nonstandard surcharge. * * *

[Redesignate current E130.2.3 as M110.1.0. Add new 2.3 to read as follows:]

**2.3 Preparation**

Single-piece rate mail must be prepared under M110.

* * * * *

*E140 Automation Rates*

* * * * *

2.0 Rate Application

* * * * *

[Revise heading of 2.2 to read as follows:]

**2.2 Flats—Package-Based Preparation**

[Amend 2.2 to provide for separate 5-digit and 3-digit rates to read as follows:]

First-Class Mail automation rates apply to each piece that is sorted under M820.2.0 or M910.2.0 into the corresponding qualifying groups:

a. Pieces in 5-digit packages of 10 or more pieces qualify for the 5-digit automation rate. (Preparation to qualify for that rate is optional and need not be done for all 5-digit destinations.)

b. Pieces in 3-digit packages of 10 or more pieces qualify for the 3-digit automation rate.

c. Pieces in ADC and mixed ADC packages qualify for the basic automation rate.

[Add new 2.3 to read as follows:]

**2.3 Flats—Optional Tray-Based Preparation**

First-Class Mail automation rates apply to each piece that is sorted under M820.3.0 into the corresponding qualifying groups:

a. Groups of 90 or more pieces in 5-digit trays (and all pieces in one less-than-full overflow tray) qualify for the 5-digit automation rate. (Preparation to qualify for that rate is optional and need not be done for all 5-digit destinations.

b. Groups of 90 or more pieces in 3-digit trays (and all pieces in one less-than-full overflow tray) qualify for the 3-digit automation rate.

c. Groups of fewer than 90 pieces in origin 3-digit trays and all pieces in ADC and mixed ADC trays qualify for the basic automation rate.

*E150 Qualified Business Reply Mail*

[Effective November 5, 2000, the Postal Service rewrote and reorganized standards for business reply mail and qualified business reply mail (see Postal Bulletin 22035 (10–19–00), available via www.usps.com). The numbering in this final rule reflects those changes.]

* * * * *

2.0 AUTHORIZATION

[Amend 2.0 by removing the last sentence.]

3.0 POSTAGE, PER PIECE CHARGES, AND FEES

* * * * *

**3.3 Fees**

[Revise 3.3 to add new item c for the QBRM quarterly fee to read as follows:]

The following fees apply to QBRM First-Class Mail:

* * * * *

c. At the mailer's option, a quarterly fee.

*E200 Periodicals*

*E210 Basic Standards*

*E211 All Periodicals*

* * * * *

6.0 ELIGIBLE FORMATS

[Amend 6.1 by replacing ''First-Class Mail or Standard Mail'' with ''First-Class Mail, Standard Mail, or Package Services''; no other changes to text.]

* * * * *

9.0 BACK NUMBERS AND REPRINTS

[Amend 9.0 by replacing ''First-Class Mail or Standard Mail'' with ''First-Class Mail, Standard Mail, or Package Services''; no other changes to text.]

* * * * *

13.0 FEES

**1.1 Fee Required**

[Amend 13.1 by revising 13.1d(3) to read as follows:]

The required fee must accompany an application for:

* * * * *

d. Reentry (unless excepted in 13.2 or 13.3) to request a:

* * * * *

(3) Change in eligibility from preferred rates or the preferred rate discount to regular Outside-County rates.

* * * * *

**13.2 No Fee**

[Amend 13.2 for clarity to read as follows:]

No fee is charged if reentry is only to change eligibility to preferred rates or the preferred rate discount.

* * * * *

[Remove 14.0.]

*E212 Qualification Categories*

* * * * *

2.0 PUBLICATIONS OF INSTITUTIONS AND SOCIETIES

* * * * *

[Remove 2.4.]

* * * * *

4.0 REQUESTER PUBLICATIONS

[Amend 4.1 by replacing ''Regular'' with ''Outside-County''; no other changes to text.]

* * * * *

6.0 NEWS AGENT REGISTRY

* * * * *

[Amend 6.4 by replacing ''Regular'' with ''Outside-County''; no other changes to text.]

[Amend 6.5 by replacing ''Standard Mail'' with ''Standard Mail or Package Services''; no other changes to text.]

*E213 Periodicals Mailing Privileges*

* * * * *

2.0 MAILING WHILE APPLICATION PENDING

[Amend 2.1 by replacing ''First-Class Mail or Standard Mail'' with ''First-Class Mail, Standard Mail, or Package Services''; no other changes to text.]

[Amend 2.2 by replacing ''Standard Mail'' with ''Standard Mail or Package Services''; no other changes to text.]

* * * * *

*E214 Reentry*

* * * * *

3.0 APPLICATION FOR REENTRY

* * * * *

[Amend 3.9a, 3.9c, and 3.10 by replacing ''Standard Mail'' with ''Standard Mail or Package Services''; no other changes to text.]

* * * * *

*E215 Copies Not Paid or Requested by Addressee*

* * * * *

2.0 NONSUBSCRIBER AND NONREQUESTER COPIES

[Amend 2.1 and 2.2 by replacing ''Regular'' with ''Outside-County''; no other changes to text.]

[Amend heading of 2.3 by adding ''and the Preferred Rate Discount'' to read as follows:]

**2.3 Preferred Rates and the Preferred Rate Discount**

[Amend 2.3 by adding references to Preferred rate discount and clarifying qualification categories to read as follows:]

For In-County rates, and Nonprofit, Classroom, and Science-of-Agriculture publications, nonsubscriber copies up to 10% of the total number of copies mailed to subscribers during the calendar year may be mailed at the applicable Preferred rates or Preferred rate discount, provided that the nonsubscriber copies would qualify as Preferred rate or Preferred rate discount publications if mailed to subscribers and if the copies are presorted under applicable standards. Nonsubscriber copies mailed over the 10% limit are not eligible for Preferred rates or the Preferred rate discount. To qualify for Outside-County rates, the nonsubscriber copies over the 10% limit must be part of a presorted commingled mailing (one that includes subscriber copies). Subject to E217.4.0, nonsubscriber copies may be mailed at In-County rates up to a 10% limit of the total number of subscriber copies of the publication mailed at In-County rates during the calendar year. Once the 10% calendar year limit is exceeded for the number of nonsubscriber copies that may be mailed at Preferred rates or the Preferred rate discount, nonsubscriber copies may not then be mailed at In-County rates even if the 10% limit separately applied to those rates (under E217.4.0) is not exceeded.

[Redesignate 2.4 through 2.7 as 2.5 through 2.8, respectively; add new section 2.4 to read as follows:]

**2.4 Publications of Institutions and Societies**

For publications of institutions and societies that are not authorized to contain general advertising under E212.2.3, all circulated copies are considered subscriber copies and the total number of such copies is the total paid circulation.

[Amend redesignated 2.5 and 2.6 by replacing ''Regular'' with ''Outside-County''; no other changes to text.]

[Amend the heading of redesignated 2.7 by adding ''noncommingled'' to read as follows:]

**2.7 Excess Noncommingled Mailing**

[Amend redesignated 2.7 by replacing the second sentence and deleting the third sentence to read as follows:]

A mailing is not eligible for Periodicals rates if it consists entirely of nonsubscriber or nonrequester copies over the 10% limit of the total number of copies mailed to subscribers or requesters during the calendar year. These copies are subject to the appropriate Express Mail, First-Class Mail, Standard Mail, or Package Services rate.

[Amend redesignated 2.8 by replacing ''Express Mail, First-Class Mail, or Standard Mail'' with ''Express Mail, First-Class Mail, Standard Mail, or Package Services''; no other changes to text.]

* * * * *

[Add new DMM section E217.0.]

*E217 Basic Rate Eligibility*

1.0 OUTSIDE-COUNTY RATES

Outside-County rates apply to all copies of an authorized Periodicals publication mailed by a publisher or news agent that are not eligible for In-County rates, except nonrequester and nonsubscriber copies under E215 for excess noncommingled mailings, unless

the publication is authorized under E212.2.0 and is not authorized to contain general advertising. Nonrequester and nonsubscriber copies in excess of the 10% allowance under E215 are subject to Outside-County rates when commingled with requester or subscriber copies as appropriate. Publications authorized for Science-of-Agriculture rates under 3.0 are subject to separate Delivery Unit, SCF, and Outside-County zones 1 & 2 rates. Nonprofit and Classroom publications are subject to the Preferred rate discount under 2.0. Outside-County rates consist of a per piece charge, a zoned charge for the weight of the advertising portion of the publication, and a charge for the weight of the nonadvertising portion. Each piece rate requires specific preparation.

2.0 OUTSIDE-COUNTY PREFERRED RATE DISCOUNT

Periodicals publications qualifying as Nonprofit or Classroom Periodicals under E270 receive a 5% discount off the total Outside-County postage, excluding the postage for advertising pounds. Requester publications are not eligible for the Preferred rate discount. Nonsubscriber copies claiming the Preferred rate discount are subject to the standards in E215.

3.0 OUTSIDE-COUNTY SCIENCE-OF-AGRICULTURE RATES

**3.1 Authorization**

To be mailed at the Science-of-Agriculture Periodicals rates, a publication must be granted Periodicals entry in other than the requester category and granted a Science-of-Agriculture rate authorization.

**3.2 Eligibility**

Science-of-Agriculture rates apply to Outside-County copies of authorized Periodicals publications mailed by publishers or news agents when the total copies provided during any 12-month period to subscribers residing in rural areas are at least 70% of the total number of copies distributed by any means for any purpose.

**3.3 Other Rates**

All Outside-County rates and discounts apply except for separate rates for Delivery Unit, DSCF, and zones 1 & 2. Each piece must meet the standards for rates or discounts claimed. Nonsubscriber copies are subject to E215. Subject to E250, the DDU or DSCF piece rate applies to each piece claimed in the pound rate portion at the corresponding rate.

**3.4 Nonadvertising Discount**

The nonadvertising discount applies to Outside-County piece rate postage.

**3.5 Application Procedures**

The Science-of-Agriculture rate is available only after USPS authorization. An application or written request for Science-of-Agriculture rates must be filed at the publication's original entry post office. Application may be made by submitting a written request when applying for Periodicals mailing privileges (on Form 3501), by completing the relevant part of an application for Periodicals mailing privileges (on Form 3502), or by filing for reentry (on Form 3510) after Periodicals mailing privileges are authorized. The applicant must submit evidence to show eligibility under the corresponding standards in E217.

4.0 IN-COUNTY RATES

**4.1 Subscriber Copies**

In-County rates apply to subscriber copies of any issue of a Periodicals publication (except a requester publication) when they are entered within the county in which the post office of original entry is located for delivery to addresses within that county, if one of the following is met:

a. The total paid circulation of such issue is less than 10,000 copies.

b. The number of paid copies of such issue distributed within the county of publication is more than 50% of the total paid circulation of such issue.

**4.2 Exceptional Conditions**

The standard in 4.1 also is applied under any of these exceptional conditions:

a. If an entry office postmaster directs the publisher to deposit copies of the publication at a postal facility serving that office, those copies are considered as mailed at the entry office for purposes of In-County rates.

b. A copy addressed to a destination within the county of publication is eligible for In-County rates when the entry post office serving that address is outside the county.

c. Each Periodicals publication (except a requester publication or commingled nonsubscriber copies above the 10% allowance) having original entry at an incorporated city situated entirely within a county or contiguous to one or more counties in the same state, but politically independent of such county or counties, is considered within a part of the county with which it is principally contiguous. Copies mailed into that county are charged postage at the In-County rates. Where more than one county is involved, the publisher selects the principal county and notifies the postmaster.

**4.3 Nonsubscriber Copies**

During a calendar year, the total number of nonsubscriber copies mailed at In-County rates may not exceed 10% of the number of subscriber copies mailed at In-County rates. The number of nonsubscriber copies mailed at In-County rates must be included in the determination of the overall 10% allowance under E215. Effectively, the allowance for nonsubscriber copies mailable at the In-County rates is the 10% allowed under this standard or the overall 10% limit under E215, whichever occurs first.

**4.4 Other Rates**

Each piece also must meet the standards for the rates and discounts claimed. Subject to E250, the Delivery Unit piece rate applies to each piece claimed in the pound rate portion at the Delivery Unit rate.

5.0 DISCOUNTS

Postage for Periodicals is reduced by all applicable discounts. The nonadvertising discount applies to the Outside-County piece rate charges and is computed under P013. Presort and automation discounts are available under E230 and E240, respectively. Destination entry discounts are available under E250 for copies entered at specific USPS facilities.

6.0 COPIES MAILED BY PUBLIC

The applicable single-piece First-Class Mail, Priority Mail, or Package Services rate is charged on copies of publications mailed by the general public (*i.e.,* other than publishers or registered news agents) and on copies returned to publishers or news agents.

* * * * *

*E250 Destination Entry*

* * * * *

2.0 DDU RATE

**2.1 Eligibility**

[Amend 2.1 by replacing sentence one and two with new sentences one, two and three to read as follows:]

The destination delivery unit (DDU) rate applies to pieces, including exceptional dispatch pieces, entered at the facility where the carrier cases mail for the carrier route serving the delivery address on the mailpiece. Letter-size copies claimed at DDU rates must be part of a carrier route package placed in a carrier route tray or a 5-digit carrier routes tray, prepared under M200, and otherwise eligible for and claimed at a

carrier route rate. Flat-size or irregular parcel-size copies claimed at DDU rates must be part of a carrier route package placed in a carrier route sack; a 5-digit carrier routes sack, a 5-digit scheme carrier routes sack, a merged 5-digit sack, or a merged 5-digit scheme sack prepared under M200 or M920, or palletized on a 5-digit carrier routes, 5-digit scheme carrier routes, merged 5-digit, or merged 5-digit scheme pallet prepared under M045, M920, M930, or M940, and otherwise eligible for and claimed at a carrier route rate. Except for the standards for preparing basic carrier route or walk-sequence carrier route rate mail, there is no additional minimum volume required for a DDU rate mailing.

* * * * *

**2.4 Deposit Schedule**

[Amend 2.4 by adding a new last sentence and by replacing ''Standard Mail'' with ''Standard Mail or Package Services mail'' to read as follows:]

The mailer may schedule deposit of DDU rate mailings at least 24 hours in advance by contacting the district office in whose service area the destination facility is located. The mailer must follow the scheduled deposit time provided. The mailer may request standing appointments for renewable 6-month periods by written application to the district office in whose service area the destination facility is located. Mixed loads of Periodicals and Standard Mail or Package Services mail require advance appointments for deposit. For DDU rate mail entered under exceptional dispatch, the application for exceptional dispatch required under D210 serves as a request for standing appointments.

* * * * *

*E270 Preferred Periodicals*

[Remove 1.0 and 6.0 and redesignate 2.0, 3.0, 4.0, 5.0, 7.0, 8.0, and 9.0 as 1.0 through 7.0, respectively.]

[Amend the heading in redesignated 1.0 by replacing the word ''RATES'' with the word ''ELIGIBILITY'' to read as follows:]

1.0 NONPROFIT ELIGIBILITY—BASIC INFORMATION

**1.1 Authorization**

[Amend redesignated 1.1 by removing the word ''rates'' and replacing the reference ''3.0 or 4.0'' with ''2.0 or 3.0'' to read as follows:]

To be mailed as a Nonprofit Periodical, a publication must be granted Periodicals entry in other than the requester category and a Nonprofit authorization for which eligibility was established under 2.0 or 3.0.

* * * * *

[Amend redesignated 1.3 by removing the word ''regular'' in the last sentence.]

[Remove 1.4.]

* * * * *

[Amend the heading in redesignated 2.0 by replacing the word ''RATES'' with the word ''ELIGIBILITY'' to read as follows:]

2.0 NONPROFIT ELIGIBILITY—QUALIFIED ORGANIZATIONS

**2.1 Types of Organizations**

[Replace the reference ''3.3 through 3.10'' with ''2.3 through 2.10.'']

**2.2 Primary Purpose**

[Replace the reference ''3.3 through 3.10'' with ''2.3 through 2.10.'']

* * * * *

[Amend the heading in redesignated 3.0 by replacing the word ''RATES'' with the word ''ELIGIBILITY'' to read as follows:]

3.0 NONPROFIT ELIGIBILITY—OTHER QUALIFIED ORGANIZATIONS

**3.1 Basic Eligibility**

[Replace the reference ''4.2'' with ''3.2.'']

**3.2 Eligibility Limitation**

[Replace the reference ''4.1c or 4.1d'' with ''3.1c or 3.1d.'']

[Amend the heading in redesignated 4.0 by replacing the word ''RATES'' with the word ''ELIGIBILITY'' to read as follows:]

4.0 CLASSROOM ELIGIBILITY

* * * * *

[Amend redesignated 4.4 by removing the word ''regular'' in the last sentence.]

[Remove 4.5.]

* * * * *

5.0 APPLICATION

[In redesignated 5.0, remove 5.1 and redesignate 5.2 and 5.3 as 5.1 and 5.2.]

**5.1 Procedures**

[Amend redesignated 5.1 by adding a new first sentence and revising the second sentence (former first sentence) to read as follows:]

The Preferred rate discount is available only after USPS authorization. An application or written request for authorization as a Nonprofit or Classroom publication must be filed at the publication's original entry post office. Application may be made by submitting a written request when applying for Periodicals mailing privileges (on Form 3501), by completing the relevant part of an application for Periodicals mailing privileges (on Form 3502), or by filing for reentry (on Form 3510) after Periodicals mailing privileges are authorized.* * *

* * * * *

6.0 MAILING WHILE APPLICATION PENDING

[Amend redesignated 6.1 by adding reference to preferred rate and replacing ''Regular Periodicals'' with ''Outside-County'' and ''Standard Mail'' with ''Standard Mail, or Package Services'' to read as follows:]

**6.1 Mailing Before Approval**

A publisher or news agent may not mail at a Periodicals Preferred rate or deduct the Preferred rate discount until the RCSC manager approves the application for such privilege. Until approval is given, postage must be paid at the Outside-County rates (if the publication is authorized), or at the applicable First-Class Mail, Standard Mail, or Package Services rates (if the publication or news agent is in a pending status for Periodicals mailing privileges).

[Amend redesignated 6.2 by replacing ''Standard Mail'' with ''Standard Mail or Package Services'' and replacing ''regular'' with ''Outside-County''; no other changes to text.]

7.0 DECISION ON APPLICATION

* * * * *

[Amend redesignated 7.4 (formerly 9.4) by replacing ''Standard Mail'' with ''Standard Mail or Package Services''; replacing ''Regular'' with ''Outside-County''; and the reference ''9.5'' with ''7.5''; no other changes to text.]

**7.5 No Refund**

[Amend 7.5c (formerly 9.5c) by removing the word ''Regular''; no other changes to text.]

* * * * *

**E600 Standard Mail**

*E610 Basic Standards*

[Matter pertaining only to Standard Mail (formerly Standard Mail (A)) in current E611 and E612 has been consolidated and reorganized into new E610. Unless otherwise indicated by the amend/revise instructions below, there are no changes to the content of these sections.]

[Remove the heading ''E611, All Standard Mail.'']

1.0 BASIC INFORMATION

[Redesignate E611.1.1 as E610.1.1, amend the heading and contents to show that Standard Mail no longer

includes matter previously referred to as Standard Mail (B) or fourth-class mail, and add the weight limit from former E612.1.0 to read as follows:]

**1.1 Definition and Weight**

Standard Mail consists of mailable matter that is neither mailed or required to be mailed as First-Class Mail nor entered as Periodicals (unless permitted or required by standard) and that weighs less than 16 ounces. Standard Mail includes matter formerly classified as Standard Mail (A) and third-class mail.

[Redesignate E611.1.2 as E610.1.2.]

* * * * *

[Redesignate E612.2.0 as E610.2.0; amend redesignated 2.1 and 2.2 by changing ''Standard Mail (A)'' to ''Standard Mail''; no other changes to text.]

[Redesignate E611.1.3 as E610.3.0, amend redesignated 3.0j by replacing ''Standard Mail (A)'' with ''Standard Mail''; no other changes to text.]

[Redesignate the heading of E612.3.0 as E610.4.0 to read as follows:]

4.0 ENCLOSURES AND ATTACHMENTS

[Redesignate E611.1.4 as E610.4.1; no other changes in text.]

[Redesignate E611.1.5 as E610.4.2, replace ''Standard Mail (A)'' with ''Standard Mail,'' and ''Standard Mail (B) with ''Package Services mail''; no other changes to text.]

[Redesignate E612.3.1 as E610.4.3 and amend by changing ''Standard Mail (A)'' to ''Standard Mail''; no other changes to text.]

[Redesignate E612.3.2 as E610.4.4 and amend by changing ''Standard Mail (A)'' to ''Standard Mail''; no other changes to text.]

[Redesignate E612.3.3 as E610.4.5 and amend to change ''Standard Mail (A)'' to ''Standard Mail''; no other changes to text.]

[Redesignate E612.4.0 as E610.5.0 to read as follows:]

5.0 RATES

[Redesignate E612.4.1 through 4.3 as E610.5.1 through 5.3, amend for clarity, amend to incorporate new maximum limits for minimum per piece rates, and revise references to DMM section numbers, to read as follows:]

**5.1 General Information**

All Standard Mail rates are presorted rates (including all nonprofit rates). These rates apply to mailings meeting the basic standards in E610 and the corresponding standards for Presorted, Enhanced Carrier Route, or automation, under E620, E630, or E640. Destination entry discounted rates are available under E650 and barcoded discounts are available for machinable parcels in E620. A residual shape surcharge also is charged for pieces that are prepared as a parcel or that are not letter-size or flat-size. Nonprofit rates may be used only by organizations authorized by the USPS under E670. Not all processing categories qualify for every rate. Pieces are subject to either a single minimum per piece rate or a combined piece/pound rate, depending on the weight of the individual pieces in the mailing under 5.2 or 5.3.

**5.2 Minimum Per Piece Rates**

The minimum per piece rates (*i.e.,* the minimum postage that must be paid for each piece) apply as follows.

a. Basic Requirement. Pieces mailed at Regular, Enhanced Carrier Route, Nonprofit, and Nonprofit Enhanced Carrier Route rates are subject to minimum per piece rates when they weigh no more than 3.3 ounces (.2063 pound).

b. Letters and Nonletters. In applying the minimum per piece rates, mail is categorized as either letters or nonletters, based on whether the mail meets the letter-size standard in C050, without regard to placement of the address on the mailpiece. There are two exceptions to this rule: (1) Mailers that have pieces that meet both the definition of a letter in C050 and the definition of an automation flat in C820 may choose to prepare and enter mail at an automation flat (nonletter) rate; (2) address placement is used to determine the length when applying the size standards and aspect ratio requirements to qualify for automation letter rates under C810. For this purpose, the length is considered to be the dimension parallel to the address.

c. Individual Rates. There are separate minimum per piece rates for each subclass (Regular, Enhanced Carrier Route, Nonprofit, and Nonprofit Enhanced Carrier Route) and within each subclass for the type of mailing and the level of presort within each mailing under E620, E630, and E640. Discounted per piece rates also may be claimed for destination entry mailings (destination bulk mail center (DBMC), destination sectional center facility (DSCF), and destination delivery unit (DDU)) under E650. DDU rates are available only for mail entered at Enhanced Carrier Route or Nonprofit Enhanced Carrier Route rates. See R600 for individual per piece rates.

**5.3 Piece/Pound Rates**

Pieces that exceed 3.3 ounces (.2063 pound) are subject to a two-part piece/pound rate that includes a fixed charge per piece and a variable pound charge based on weight. There are separate per piece rates for each subclass (Regular, Enhanced Carrier Route, Nonprofit, and Nonprofit Enhanced Carrier Route) and within each subclass for the type of mailing and the level of presort within each mailing under E620, E630, and E640. There are separate per pound rates for each subclass (Regular, Enhanced Carrier Route, Nonprofit, and Nonprofit Enhanced Carrier Route) under E620, E630, and E640. Discounted per pound rates also may be claimed for destination entry mailings (destination bulk mail center (DBMC), destination sectional center facility (DSCF), and destination delivery unit (DDU)) under E650.

[Add new 5.4 and 5.5 to read as follows:]

**5.4 Machinable Parcel Barcoded Discount**

Machinable parcels (C050) mailed at Regular or Nonprofit rates that are prepared with barcodes under C850 and meet the eligibility requirements in E620 may qualify for a barcoded discount. Pieces eligible for a barcoded discount are also subject to a residual shape surcharge under 5.5. Pieces mailed at Enhanced Carrier Route or Nonprofit Enhanced Carrier route rates are not eligible for a barcoded discount.

**5.5 Residual Shape Surcharge**

Mail that is prepared as a parcel or is not letter-size or flat-size as defined in C050 is subject to a residual shape surcharge. There is one surcharge for mail entered at Regular or Nonprofit rates and a different surcharge for mail entered at Enhanced Carrier Route or Nonprofit Enhanced Carrier Route rates.

[Redesignate E612.4.4 as 5.6, amend to provide for the residual shape surcharge, and to add as the first sentence the first sentence of previous E612.4.5 to read as follows:]

**5.6 Net Postage**

Postage is computed at the applicable rates on the entire mailing to be mailed at one time. The net postage rate that must be paid is either the applicable minimum per piece rate or the piece/pound rate, as reduced by any discounts for which the piece is eligible, and/or as increased by any surcharge to which the piece is subject. The net postage rate is commonly designated by the name of the primary rate category or discount (*e.g.,* Enhanced Carrier Route rate, automation letter rate, automation flat rate, Presorted rate).

[Remove E612.4.5.]

[Remove E612.4.6. This section is no longer needed because all Package

Services mail may now weigh less than 16 ounces.]

[Add new heading 6.0 to read as follows:]

6.0 FEES

[Redesignate E612.4.7 as E610.6.1 and amend to change ''Standard Mail (A)'' to ''Standard Mail''; no other changes to text.]

[Redesignate E611.1.6 as 6.2; and amend by adding ''(R900)'' at the end of the sentence; no other changes to text.]

[Remove current E611.1.7 and 1.8.]

[Redesignate E612.4.8 as E610.7.0 and amend to change ''Standard Mail (A)'' to ''Standard Mail''; no other changes to text.]

[Redesignate E612.4.9 as E610.8.0, amend to change ''Standard Mail (A)'' to ''Standard Mail,'' amend redesignated 8.0c for clarity, amend redesignated 8.0e to provide for use of detached address labels as previously provided in E611.1.7, amend redesignated 8.0g to incorporate former E611.1.8, redesignate 8.0j as 8.0k, and add new 8.0j to read as follows:]

8.0 PREPARATION

Each Standard Mail mailing is subject to these general standards:

a. All pieces in a mailing must be of the same processing category, except that irregular and machinable parcels may be commingled in 5-digit sacks or on 5-digit pallets.

b. Each mailing must contain at least 200 pieces or 50 pounds of pieces. See E620 for volume requirement eligibility unique to Presorted Standard rate mailings. Other volume standards also can apply, based on the rate claimed.

c. For letter-size and flat-size mail, all pieces in an automation mailing must be eligible for an automation rate. Separate automation and Presorted rate mailings of flats may be co-sacked under M910. Separate automation, Presorted, and Enhanced Carrier Route mailings of flats may be co-containerized under M920, M930 or M940.

d. All pieces in a mailing must be sorted together and marked under the standards for the rate claimed.

e. Each piece must bear the addressee's name and delivery address, including the correct ZIP Code or ZIP+4 code, unless an alternative address format is used subject to A040. Detached address labels may be used subject to A060. Pieces in automation rate mailings, upgradable nonautomation rate pieces, or pieces prepared with detached address labels are subject to additional standards.

f. Postage must be paid under P600 with precanceled stamps, postage meter, or permit imprint.

g. A postage statement, completed and signed by the mailer, using the correct USPS form or an approved facsimile, must be submitted with each mailing. In addition, mailings must be documented under P012 and the standards for the rate claimed.

h. Each piece must meet the standards for any other rate or discount claimed.

i. Any POSTNET barcode on a mailpiece must be correct for the delivery address and must meet the standards in C840 and A950.

j. Any postal routing code barcode on a machinable parcel must be correct for the delivery address and must meet the standards in C850.

k. Mailings must be deposited at a business mail entry unit of the post office where the postage permit or license is held and the annual bulk fee paid, unless deposit elsewhere is permitted by standard.

[Redesignate E612.4.10 as E610.9.0 and revise to allow use of certain special services for matter subject to the residual shape surcharge and to specify the conditions for such use to read as follows:]

9.0 SPECIAL SERVICES

**9.1 Eligible Matter**

Standard Mail that is subject to the residual shape surcharge (pieces prepared as parcels or that are not letter-size or flat-size as defined in C050) may receive the following additional special services subject to the standards for the special service and upon payment of the appropriate special service fees: bulk insurance (S913), return receipt for merchandise (S917), and electronic option Delivery Confirmation (S918). No other special services may be used with Standard Mail. Standard Mail that is letter-size or flat-size (C050) and is prepared as letter-size or flat-size mail is not eligible for any special services. Machinable parcels using Bulk Parcel Return Service are not eligible for any special services. Pieces mailed with detached address labels under A060 is not eligible for any special services.

**9.2 Additional Preparation Requirements**

Pieces prepared using special services must bear a return address under A010 and must bear an ancillary service endorsement (F010) that results in return of the mailpiece to the sender if undeliverable as addressed (Address Service Requested, Forwarding Service Requested, or Return Service Requested).

[Revise the heading of E620 to read as follows:]

*E620 Presorted Rates*

[Revise the heading of 1.0 to read as follows:]

1.0 BASIC STANDARDS

[Revise the heading of 1.1 to read as follows:]

**1.1 General**

[Amend 1.1 by replacing in the first sentence of 1.1 and in 1.1b ''Standard Mail (A)'' with ''Standard Mail,'' and by replacing in 1.1a ''E611 and E612'' with ''E610''; no other changes to text.]

* * * * *

[Amend 1.3 by replacing ''Standard Mail (A)'' with ''Standard Mail''; no other changes in text.]

* * * * *

[Redesignate 1.5 as 2.0 and amend the heading by removing the word ''Presorted''; no other changes to text.]

[Redesignate 1.6 as 3.0; no other changes to text.]

[Add 4.0 to read as follows:]

4.0 BARCODED DISCOUNT

The barcoded discount applies to Presorted rate machinable parcels (C050) that are subject to the residual shape surcharge in 3.0, bear a correct, readable barcode under C850 for the ZIP Code shown in the delivery address; and are prepared as machinable parcels under M045 or M610. Machinable parcels entered at the DSCF rates are eligible for the barcoded discount only if prepared in 5-digit sacks or on 5-digit pallets (*i.e.,* are not prepared in ASF, BMC, or mixed BMC sacks or pallets). Machinable parcels claiming the DBMC rates that are entered at an ASF are not eligible for the barcoded discount except that mail entered at the Phoenix, AZ, ASF may claim the barcoded discount because that facility uses barcode scanning equipment. See P600 for postage payment standards.

[Redesignate current E630.1.0 through E630.7.0 as E711 through E715, as directed later in this document.]

[Add new E630 to read as follows:]

*E630 Enhanced Carrier Route Rates*

1.0 BASIC STANDARDS

[Redesignate E620.2.1 as E630.1.1 and amend 1.1a by changing ''E611 and E612'' to ''E610''; no other changes to text.]

[Redesignate E610.2.2 through 2.7 as E630.1.2 through 1.7, respectively.]

[Add new heading 2.0 to read as follows:]

2.0 Rates

[Redesignate E620.2.8 through E620.2.10 as E630.2.1 through E630.2.3,respectively and amend

redesignated 2.3 by changing ''2.6 and 2.7'' to ''1.6 and 1.7''; no other changes to text.]

* * * * *

[Amend the heading of E640 by removing ''Standard Mail (A)'' to read as follows:]

*E640 Automation Rates*

1.0 REGULAR AND NONPROFIT RATES

**1.1 All Pieces**

[Amend the introductory sentence by replacing ''Standard Mail (A)'' with ''Standard Mail''; amend 1.1a by replacing ''E611 and E612'' with ''E610,'' no other changes to text.]

* * * * *

2.0 ENHANCED CARRIER ROUTE RATES

**2.1 All Pieces**

[Amend 2.1a by replacing ''E611 and E612'' with ''E610,'' no other changes to text.]

* * * * *

*E650 Destination Entry*

[Remove the heading ''E651, Regular, Nonprofit, and Enhanced Carrier Route Standard Mail.'']

1.0 BASIC STANDARDS

[Amend 1.1 by replacing ''E611 and E612'' with ''E610'; no other changes to text.]

* * * * *

[Amend 1.4 by replacing ''Standard Mail (A)'' with ''Standard Mail.'']

[Amend 1.5 by replacing ''P750'' with ''P950.'']

* * * * *

2.0 VERIFICATION

* * * * *

[Amend 2.2 by replacing ''P750'' with ''P950.'']

* * * * *

3.0 DEPOSIT

* * * * *

[Amend 3.3d by changing ''Standard Mail (A)'' to ''Standard Mail'' and by changing ''Standard Mail (B)'' to ''Package Services mail.'']

* * * * *

[Amend 3.10 by changing ''Standard Mail (A)'' to ''Standard Mail.'']

* * * * *

7.0 DDU DISCOUNT

[Amend 7.1 by changing ''Standard Mail (A)'' to ''Standard Mail.'']

* * * * *

[Redesignate E652 as E751. Amend E751 as specified later in this document.]

*E670 Nonprofit Standard Mail*

1.0 BASIC STANDARDS

* * * * *

[Amend 1.2 by replacing ''P750'' with ''P950.'']

[Amend 1.3 by replacing ''E611 and E612'' with ''E610.'']

* * * * *

3.0 QUALIFIED POLITICAL COMMITTEES AND STATE OR LOCAL VOTING REGISTRATION OFFICIALS

* * * * *

[Amend 3.3 by replacing ''Standard Mail (A)'' with ''Standard Mail.'']

* * * * *

5.0 ELIGIBLE AND INELIGIBLE MATTER

* * * * *

[Amend 5.4d(2) by replacing ''Standard Mail (A)'' with ''Standard Mail.'']

* * * * *

[Amend 5.6a by replacing ''Standard Mail (A)'' with ''Standard Mail.'']

* * * * *

[Amend 5.12 by replacing ''Standard Mail (A)'' with ''Standard Mail.'']

* * * * *

9.0 MAILING WHILE APPLICATION PENDING

* * * * *

[Amend 9.2 by replacing ''Standard Mail (A)'' with ''Standard Mail.'']

* * * * *

[Add new E700 as follows:]

**E700 Package Services Mail**

[Matter pertaining to only Package Services (formerly Standard Mail (B)) in current E611 and E613 has been consolidated, reorganized, and added as new E710. Unless otherwise indicated by the amend/revise instructions below, there are no changes to the content of these sections. They are reproduced here to assist in understanding the new organization.]

*E710 Basic Standards*

1.0 BASIC INFORMATION

[Redesignate E611.1.1 as E710.1.1 and amend by replacing ''Standard Mail'' with ''Package Services'' and including Package Services subclasses to read as follows:]

**1.1 Definition**

Package Services mail consists of mailable matter that is neither mailed or required to be mailed as First-Class Mail nor entered as Periodicals (unless permitted or required by standard). Package Services mail includes matter formerly classified as Standard Mail (B). There are four subclasses of Package Services mail: Parcel Post, Bound Printed Matter, Media Mail (formerly Special Standard), and Library Mail. Information on specific eligibility requirements to qualify for rates under each of the four subclasses is found in E711, E712, E713, and E714.

[Redesignate E613.1.0 as E710.1.2 and amend by eliminating the minimum weight of 1 pound and replacing ''Special Standard Mail'' with ''Media Mail'' to read as follows:]

**1.2 Weight**

There is no minimum weight for Package Services. A single piece of Parcel Post, Media Mail, and Library Mail can weigh no more than 70 pounds. A single piece of Bound Printed Matter can weigh no more than 15 pounds.

[Redesignate existing E611.1.2 as E710.1.3 and amend by changing the class name from ''Standard Mail'' to ''Package Services'' and by deleting references to electronic documents to read as follows:]

**1.3 Postal Inspection**

Package Services mail is not sealed against postal inspection. Regardless of physical closure, the mailing of articles at Package Services rates constitutes consent by the mailer to postal inspection of the contents.

[Redesignate existing E611.1.3 as E710.1.4 and amend by changing ''Standard Mail (A)'' to ''Standard Mail'' in 1.4j; no other changes to text.]

[Redesignate existing E611.1.4 as E710.1.5 and amend by replacing ''Standard Mail'' with ''Package Services''; no other changes to text.]

[Redesignate existing E611.1.5 as E710.1.6 and remove references to ''Standard Mail (A)'' and ''Standard Mail'' to read as follows:]

**1.6 Incidental First-Class Attachments and Enclosures**

Incidental First-Class matter may be enclosed in or attached to any Package Services piece without payment of First-Class postage. An incidental First-Class attachment or enclosure must be matter that, if mailed separately, would require First-Class postage, is closely associated with but secondary to the host piece, and is prepared so as not to interfere with postal processing. An incidental First-Class attachment or enclosure may be a bill for the product or publication, a statement of account for past products or publications, or a personal message or greeting included with a product, publication, or parcel. Postage at the Package Services rate for the host piece is based on the combined weight of the

host piece and the incidental First-Class attachment or enclosure.

[Redesignate E613.2.0 as E710.2.0.]

2.0 ZONED RATES

[Redesignate existing E613.2.1 as E710.2.1 and amend by replacing ''Standard Mail'' with ''Package Services''; no other changes to text.]

[Redesignate existing E613.2.2 as E710.2.2, amend by changing ''Standard Mail'' to ''Package Services'' in the first sentence, and amend 2.2c by inserting ''Parcel Post Intra-BMC'' to read as follows:]

**2.2 Redirected Mailings**

A mailer who presents large mailings of zoned Package Services mail may be authorized or directed to deposit such mailings at another postal facility when processing or logistics make such an alternative desirable for the USPS, subject to these conditions:

a. Zoned postage need not be recomputed if both the original post office of mailing and the alternative facility use the same zone chart for computing zoned postage, based on the 3-digit prefix of their ZIP Codes.

b. Postage must be recomputed on pieces in mailings redirected to a postal facility that uses a different zone chart for computing zoned postage.

c. Postage for pieces claimed at the Parcel Post Intra-BMC local zone rates must be recomputed at the applicable zone rate for the alternative postal facility. Postage also may be recomputed for other pieces that are ineligible for the Parcel Post Intra-BMC local zone rates but could become eligible at the postal facility to which the mailing is redirected.

[Redesignate existing E613.2.3 as E710.2.3 and amend by changing ''Standard Mail'' to ''Package Services''; no other changes.]

[Redesignate E613.3.0 as E710.3.0 and revise to read as follows:]

3.0 ADDRESSING

**3.1 Delivery and Return Address**

All Package Services mail must bear a delivery address. Except for single-piece rate Parcel Post, the delivery address on each piece must include the correct ZIP Code or ZIP+4 code. Alternative address formats or detached address labels may be used, subject to A040 or A060. All Package Services mail must bear the sender's return address.

[Redesignate E611.1.6 as E710.3.2 and amend title by adding ''Fees'' to read as follows:]

**3.2 Address Correction Fees**

The fee for manual or automated address correction service is charged per notice issued (R700).

[Redesignate E611.1.8 as E710.4.0 and amend for clarity to read as follows:]

4.0 DOCUMENTATION

Each mailing must be accompanied by a correct, completed USPS postage statement form, or approved facsimile, signed by the mailer. A postage statement is not required for a Package Services mailing when the correct postage at the single-piece rate is affixed to each piece. Additional supporting documentation may be required by the standards for the rate claimed or postage payment method used.

[Add new E711 to read as follows:]

*E711 Parcel Post*

[Redesignate E630.1.0 as E711.1.0 and revise to read as follows:]

1.0 DEFINITION

Parcel Post (including Parcel Select) is Package Services mail that is not mailed as Bound Printed Matter, Media Mail, or Library Mail. Any Package Services matter may be mailed at Parcel Post rates, subject to the basic standards in E710.

[Add new E711.2.0 to read as follows:]

2.0 BASIC STANDARDS

[Redesignate E630.1.2 as E711.2.1 and change ''Standard Mail (A)'' to ''Standard Mail'' and change reference ''E611'' to ''E710'' to read as follows:]

**2.1 Enclosures**

Parcel Post (including Parcel Select) may contain any printed matter mailable as Standard Mail, in addition to the enclosures and additions listed in E710.

[Redesignate E630.1.3 as E711.2.2 and amend to add the Intra-BMC and Parcel Select-DBMC nonmachinable surcharges to read as follows:]

**2.2 Rate Eligibility**

There are five Parcel Post (including Parcel Select) rate categories: Intra-BMC, Inter-BMC, destination bulk mail center (DBMC), destination sectional center facility (DSCF), and destination delivery unit (DDU). Destination entry rates are named Parcel Select. Intra-BMC and Inter-BMC Parcel Post rates and DBMC Parcel Select rates are calculated based on the zone to which the parcel is addressed and the weight of the parcel. DSCF and DDU Parcel Select rates are calculated based on the weight of the parcel. Generally, Intra-BMC rates apply to parcels mailed and delivered within the same BMC service area and Inter-BMC rates apply to parcels mailed in one BMC service area and delivered in a different BMC service area. Specific standards for Inter-BMC and Intra-BMC rates and applicable discounts are described below. Generally, to qualify for the Parcel Select DBMC, DSCF, or DDU rates, mailers must enter their parcels at the destination BMC, SCF, or delivery unit postal facility that will process or deliver the parcels. (See E750 for destination entry requirements.) Inter-BMC, Intra-BMC, and Parcel Select-DBMC Parcel Post is subject to a nonmachinable surcharge if the criteria specified in C050.4.1 for machinable parcels are not met. Additional requirements for Parcel Post rates and discounts are as follows:

a. Intra-BMC rates apply to all Parcel Post that originates and destinates in the service area of the same BMC or ASF. Intra-BMC rates also apply to Parcel Post that originates and destinates in the same state for Alaska and Hawaii and in the same territory for Puerto Rico. See Exhibit 2.2. Nonmachinable pieces (C050.4.1 and C700) mailed at Intra-BMC rates are subject to a nonmachinable surcharge in addition to the postage rate.

b. Inter-BMC rates apply to all Parcel Post that originates in the service area of a BMC or ASF or in Alaska, Hawaii, or Puerto Rico and destinates outside that area, state, or territory. Nonmachinable pieces (C050.4.1 and C700) mailed at Inter-BMC rates are subject to a nonmachinable surcharge in addition to the postage rate.

c. Parcel Post for which OBMC Presort, BMC Presort, and barcoded discounts are claimed and Parcel Post that is mailed at a destination entry rate (Parcel Select-DBMC, -DSCF, -DDU (E751)) must be part of a mailing of 50 or more Parcel Post rate pieces. Eligibility for one of those rates or discounts does not require a separate 50 qualifying pieces per rate or per discount. Eligibility for more than one of those rates or discounts in the same Parcel Post mailing is possible, provided there are a total of at least 50 pieces of mail qualifying for any or all Parcel Post rates in the mailing and all other preparation and eligibility requirements for the rates or discounts are met.

d. The BMC Presort per piece discount applies to pieces of inter-BMC Parcel Post sorted to BMC destinations under L601 for machinable pieces and sorted to BMC and ASF destinations for nonmachinable pieces under L605. To qualify, machinable pieces must be placed in pallet boxes on pallets, and nonmachinable pieces must be placed directly on pallets under M041 and

M045. The mail must be entered at a postal facility that is not a BMC and must be part of a mailing containing 50 or more Parcel Post rate pieces.

e. The origin bulk mail center (OBMC) Presort per piece discount applies to pieces of Inter-BMC Parcel Post sorted to BMC destinations under L601 for machinable pieces and sorted to BMC and ASF destinations for nonmachinable pieces under L605. To qualify, machinable pieces must be placed in pallet boxes on pallets; and nonmachinable pieces must be placed directly on pallets under M041 and M045. The mail must be entered at a BMC listed in L601 and must be part of a mailing containing 50 or more Parcel Post rate pieces.

f. The barcoded discount applies to Parcel Post (including Parcel Select) machinable parcels (C050.4.1) that bear a correct, readable barcode under C850 for the ZIP Code of the delivery address; are part of a mailing of 50 or more Parcel Post (including Parcel Select) rate pieces; are not mailed at the DSCF or DDU rates; and, if claiming the DBMC rates, are not entered at an ASF. An exception is that properly prepared machinable pieces of DBMC rate mail entered at the Phoenix, AZ, ASF may claim the barcoded discount because that facility uses barcode scanning equipment.

g. The applicable oversized rate applies to pieces that measure over 108 inches but that are not more than 130 inches in combined length and girth.

h. The balloon rate applies to pieces that measure over 84 inches but that are not more than 108 inches in combined length and girth and also weigh less than 15 pounds; they are subject to the rate equal to that of a 15-pound parcel for the zone to which the parcel is addressed.

EXHIBIT 2.2.—BMC/ASF SERVICE AREAS

| Service area | ZIP Code areas served |
|---|---|
| BMC: | |
| New Jersey | 005, 068–079, 085–098, 100–119, 124–127, 340. |
| Springfield | 010–067, 120–123, 128, 129. |
| Philadelphia | 080–084, 137–139, 169–199. |
| Pittsburgh | 150–168, 260–266, 439–447. |
| Washington | 200–212, 214–239, 244, 254, 267, 268. |
| Greensboro | 240–243, 245–249, 270–297, 376. |
| Cincinnati | 250–253, 255–259, 400–418, 421, 422, 425–427, 430–433, 437, 438, 448–462, 469–474. |
| Atlanta | 298, 300–312, 317–319, 350–352, 354–368, 373, 374, 377–379, 399. |
| Jacksonville | 299, 313–316, 320–339, 341, 342, 344, 346, 347, 349. |
| Memphis | 369–372, 375, 380–397, 700, 701, 703–705, 707, 708, 713, 714, 716, 717, 719–729. |
| St. Louis | 420, 423, 424, 475–479, 614–620, 622–631, 633–639. |
| Detroit | 434–436, 465–468, 480–497. |
| Chicago | 463, 464, 530–532, 534, 535, 537–539, 600–611, 613. |
| Minneapolis/St. Paul | 498, 499, 540–551, 553–564, 566. |
| Des Moines | 500–516, 520–528, 612, 680, 681, 683–689. |
| Kansas City | 640, 641, 644–658, 660–662, 664–679, 739. |
| Denver | 690–693, 800–816, 820, 822–831. |
| Dallas | 706, 710–712, 718, 733, 747, 750–799, 885. |
| Seattle | 835, 838, 970–978, 980–986, 988–994. |
| Los Angeles | 889–891, 893, 900–908, 910–928, 930–935. |
| San Francisco | 894, 895, 897, 936–966. |
| ASF: | |
| Buffalo | 130–136, 140–149. |
| Fargo | 565, 567, 580–588. |
| Sioux Falls | 570–577. |
| Billings | 590–599, 821. |
| Oklahoma City | 730, 731, 734–738, 740, 741, 743–746, 748, 749. |
| Salt Lake City | 832–834, 836, 837, 840–847, 898, 979. |
| Phoenix | 850, 852, 853, 855–857, 859, 860, 863, 864. |
| Albuquerque | 865, 870–875, 877–884. |
| Other: | |
| Puerto Rico | 006–009. |
| Hawaii | 967–969. |
| Alaska | 995–999. |

[Redesignate E630.1.5 as E711.2.3 and change the reference in the last sentence to R700; no other changes to text.]

* * * * *

[Redesignate E630.2.0 as E712 and revise in its entirety as follows:]

*E712 Bound Printed Matter*

1.0 BASIC STANDARDS

**1.1 Description**

Bound Printed Matter (BPM) is a subclass of Package Services. BPM must:

a. Meet the basic standards for Package Services mail in E710.

b. Weigh no more than 15 pounds.

c. Consist of advertising, promotional, directory, or editorial material (or any combination of such material).

d. Be securely bound by permanent fastenings such as staples, spiral binding, glue, or stitching. Loose-leaf binders and similar fastenings are not considered permanent.

e. Consist of sheets of which at least 90% are imprinted by any process other than handwriting or typewriting with words, letters, characters, figures, or images (or any combination of them).

f. Not have the nature of personal correspondence.

g. Not be stationery, such as pads of blank printed forms.

**1.2 Enclosures**

In addition to the basic standards in E710, BPM may have the following additions and enclosures:

a. Any printed matter mailable as Standard Mail.

b. A merchandise sample attached to a bound page or to a permissible loose enclosure, if the sample represents only an incidental portion of the BPM piece and if the sample is not provided exclusively or primarily as a premium or an inducement promoting the sale of the BPM piece. The sample may be identified as a ''free gift'' when it is clear that the sample is offered to the addressee to market the gift product; such marketing may also promote the sale of the BPM.

**1.3 Nonidentical-Weight Pieces**

Mailings may contain nonidentical-weight pieces only if the correct postage is affixed to each piece or if the RCSC serving the post office of mailing has authorized payment of postage by permit imprint under P910 or P930.

**1.4 POSTNET Barcodes on Flats**

Addresses on BPM flats may include an accurate ZIP+4 or delivery point barcode that meets the standards in C840. There are no automation discounts for BPM flats. Pieces within a package must be either 100 percent barcoded or nonbarcoded.

2.0 RATES

BPM rates are based on the weight of a single addressed piece or 1 pound, whichever is higher, and the zone (where applicable) to which the piece is addressed. Rate categories are as follows:

a. Single-Piece Rate. The single-piece rate applies to BPM not mailed at the Presorted rate or Carrier Route rate.

b. Presorted Rate. The Presorted rate applies to BPM prepared in a mailing of at least 300 pieces, prepared and presorted as specified in M045 and M722.

c. Carrier Route Rate. The carrier route rate applies to BPM prepared in a mailing of at least 300 pieces presorted to carrier routes, prepared and presorted as specified in M045 and M723.

d. Barcoded Discount. The barcoded discount applies to BPM machinable parcels (C050.4.1) that bear a correct, readable barcode under C850 for the ZIP Code of the delivery address and are part of a single-piece rate mailing of 50 or more BPM pieces or are part of a Presorted rate mailing of at least 300 BPM pieces. Matter mailed at Presorted rates must be prepared under the machinable parcel preparation standards in M045 and M720. The barcoded discount is not available for pieces mailed at Presorted DDU or DSCF rates, or for Presorted DBMC rate mailings entered at an ASF other than Phoenix, AZ, ASF. Carrier Route rate mail is not eligible for the barcoded discount.

3.0 ADDITIONAL STANDARDS FOR PRESORTED RATES

**3.1 ZIP Code Accuracy**

All 5-digit ZIP Codes included in addresses on pieces claimed at Presorted rates must be verified and corrected within 12 months before the mailing date using a USPS-approved method. The mailer must certify that this standard has been met when the corresponding mail is presented to the USPS. This standard applies to each address individually, not a specific list or mailing. An address meeting this standard may be used in mailings at any other rates to which the standard applies during the 12-month period after its most recent update.

**3.2 Preparation**

Pieces claiming the Presorted rates must be prepared under the applicable standards in M045 or M722.

4.0 ADDITIONAL STANDARDS FOR CARRIER ROUTE RATES

**4.1 Carrier Route Information**

Except for mailings prepared with a simplified address format under A040, carrier route codes must be applied to mailings using CASS-certified software and the current USPS Carrier Route Product, or another AIS product containing carrier route information, subject to A930 and A950. The carrier route information must be updated within 90 days before the mailing date.

**4.2 Preparation**

Pieces claiming the carrier route rates must be prepared under the applicable standards in M045 or M723.

5.0 ADDITIONAL STANDARDS FOR DESTINATION ENTRY RATES

Eligibility standards for Presorted and Carrier Route Destination Delivery Unit (DDU) rates, Destination Sectional Center Facility (DSCF) rates, and Destination Bulk Mail Center (DBMC) rates are in E752.

6.0 ADDITIONAL STANDARDS FOR BEDLOADED MAILINGS

Bedloaded packages are permitted only when prepared for and entered at DDU rates. If prepared, bedloaded packages of BPM are required to be prepared under the sortation standards for flats or irregular parcels, as applicable, and are not eligible for barcoded discounts.

* * * * *

[Add new E713 as follows:]

*E713 Media Mail*

[Redesignate E630.3.1 as E713.1.0 and change the heading, class, subclass names, section order, and references to read as follows:]

1.0 RATE ELIGIBILITY

Media Mail is Package Services matter that meets the standards in E710 and those below. Media Mail rates are based on the weight of the piece without regard to zone. The rate categories and discounts are as follows:

a. Single-Piece Rate. The single-piece rate applies to Media Mail not mailed at a 5-digit or BMC presort rate.

b. 5-Digit Presort Rate. The 5-digit Presort rate applies to a mailing of at least 500 pieces of Media Mail that meets the other requirements of 4.0 and that is prepared and presorted to 5-digit ZIP Codes as specified in M730 or M041 and M045.

c. BMC Presort Rate. The BMC Presort rate applies to a mailing of at least 500 pieces of Media Mail that meets the other requirements of 4.0 and that is prepared and presorted to bulk mail centers as specified in M730 or M041 and M045.

d. Barcoded Discount. The barcoded discount applies to Media Mail machinable parcels (C050) that are included in a mailing of at least 50 pieces of Media Mail. The pieces must be entered either at single-piece rates or BMC presort rates and bear a correct, readable barcode for the ZIP Code shown in the delivery address as required by C850. The barcoded discount is not available for pieces mailed at Media Mail 5-digit Presort rates.

[Add new E713.2.0 to read as follows:]

2.0 QUALIFICATION

[Redesignate E630.3.2 as E713.2.1 and change the subclass name to Media Mail; no other changes to text.]

[Redesignate E630.3.3 as E713.2.2, change the class name from ''Standard Mail (A)'' to ''Standard Mail'' and the subclass name to Media Mail; no other changes to text.]

[Redesignate E630.3.4 as E713.2.3 and change the subclass name and cross references to read as follows:]

**2.3 Enclosures in Books**

Enclosures in books mailed at Media Mail rates are subject to these additional standards:

a. Either one envelope or one addressed postcard may be bound into the pages of a book. If also serving as an order form, the envelope or card may be in addition to the order form permitted by 2.3b.

b. One order form may be bound into the pages of a book. If also serving as an envelope or postcard, the order form may be in addition to the envelope or card permitted by 2.3a.

c. Announcements of books may appear as book pages. These announcements must be incidental and exclusively devoted to books, without extraneous advertising of book-related or other materials or services. Announcements may fully describe the conditions and methods of ordering books and may contain ordering instructions for use with a separate order form. Up to three of these announcements may contain as part of their format a single order form, which may also serve as a postcard. The order forms permitted with these announcements are in addition to, and not in place of, order forms that may be enclosed under 2.3a or 2.3b.

[Redesignate E630.4.0 as E713.3.0 and change the subclass name to read as follows:]

3.0 PRESORTED MEDIA MAIL

[Redesignate E630.4.1 as E713.3.1 and change the subclass name and change the cross reference to M730 from M630; no other changes to text.]

[Redesignate E630.4.2 as E713.3.2 and change the subclass name; no other changes to text.]

[Redesignate E630.4.3 as E713.3.3 and change the subclass name; no other changes to text.]

[Redesignate E630.4.4 as E713.3.4 and eliminate 1,000 cubic inches as a minimum quantity to read as follows:]

**3.4 Definitions**

For this standard:

a. Full sack means a sack containing at least eight pieces or a quantity of pieces weighing from 20 to 70 pounds.

b. Substantially full sack means either at least four pieces or a quantity of pieces weighing from 20 to 70 pounds.

[Redesignate E630.4.5 as E713.3.5, change the subclass name, change ''bundles'' to ''packages,'' and remove ''1,000 cubic inches'' to read as follows:]

**3.5 5-Digit Rate**

To qualify for the Media Mail 5-digit presort rate, a piece must be in a mailing of at least 500 Media Mail pieces prepared and sorted either under M730 to full 5-digit sacks or under M045 to 5-digit pallets. These conditions also apply:

a. Mailings of at least 500 nonmachinable outside parcels may qualify for the Media Mail 5-digit presort rate if prepared to preserve sortation by 5-digit ZIP Code as prescribed by the postmaster of the mailing office. The postmaster may require 24-hour notice before the mailing is presented.

b. Mailings prepared as palletized packages must consist of 5-digit packages, each containing at least eight pieces or weighing 20 pounds, whichever occurs first. No package may exceed 40 pounds. If there are more than 20 pounds of mail to a 5-digit destination, the mailer must prepare the minimum number of packages that weigh from 20 to 40 pounds each.

[Redesignate E630.4.6 as E713.3.6, change the subclass name, change ''bundles'' to ''packages,'' and remove ''1,000 cubic inches'' to read as follows:]

**3.6 BMC Rate**

To qualify for the Media Mail BMC presort rate, a piece must be in a mailing of at least 500 pieces of Media Mail prepared and sorted either under M730 to full or substantially full BMC sacks or to BMC pallets under M045. These conditions also apply:

a. Mailings of at least 500 nonmachinable outside parcels may qualify for the Media Mail BMC presort rate if prepared to preserve sortation by BMC as prescribed by the postmaster of the mailing office. The postmaster may require 24-hour notice before the mailing is presented.

b. Mailings prepared as palletized packages must consist of BMC packages, each containing at least eight pieces or weighing 20 pounds, whichever comes first. No package may exceed 40 pounds. If there are more than 20 pounds of mail to a BMC destination, the mailer must prepare the minimum number of packages that weigh from 20 to 40 pounds each.

[Add new E714 as follows:]

*E714 Library Mail*

[Redesignate E630.5.1 as E714.1.0 and amend by changing the class name to read as follows:]

1.0 RATE ELIGIBILITY

Library Mail is Package Services matter meeting the standards in E710 and those below. Library Mail rates are based on the weight of the piece without regard to zone. The rate categories and discounts are as follows:

a. Single-Piece Rate. The single-piece rate applies to Library Mail not mailed at a 5-digit or BMC rate.

b. 5-Digit Presort Rate. The 5-digit Presort rate applies to a mailing of at least 500 pieces of Library Mail that meets the other requirements of 3.0 and is prepared and presorted to 5-digit ZIP Codes as specified in M740 or M041 and M045.

c. BMC Presort Rate. The BMC Presort rate applies to a mailing of at least 500 pieces of Library Mail that meets the other requirements of 3.0 and is prepared and presorted to bulk mail centers as specified in M740 or M041 and M045.

d. Barcoded Discount. The barcoded discount applies to Library Mail machinable parcels (C050) that are included in a mailing of at least 50 pieces of Library Mail. The pieces must be entered either at single-piece rates or BMC Presort rates and bear a correct, readable barcode for the ZIP Code shown in the delivery address as required by C850. The barcoded discount is not available for pieces mailed at Library Mail 5-digit Presort rates.

[Add new E714.2.0 that follows:]

2.0 QUALIFICATION

[Redesignate E630.5.2 as E714.2.1 and amend the heading and references to read as follows:]

**2.1 Sender, Recipient, and Contents**

Each piece must show in the address or return address the name of a school, college, university, public library, museum, or herbarium or the name of a nonprofit religious, educational, scientific, philanthropic (charitable), agricultural, labor, veterans, or fraternal organization or association. For Library Mail standards, these nonprofit organizations are defined in E670. Only the articles described in 2.2 and 2.3 may be mailed at the Library Mail rate.

[Redesignate E630.5.3 as E714.2.2 and revise the heading to read as follows; no change to text:]

**2.2 Qualified Mailings Between Entities**

[Redesignate E630.5.4 as E714.2.3 and revise the heading to read as follows; no change to text.]

**2.3 Qualified Mailings ''To'' or ''From''**

[Redesignate E630.5.5 as E714.2.4 and change the cross reference from E611 to E710; no other changes to text.]

[Redesignate E630.5.6 as E714.2.5 and change the cross reference from E611 to E710; no other changes to text.]

[Redesignate E630.6.0 as E714.3.0 and change the cross reference from M630 to M740; no other changes to text.]

* * * * *

[Redesignate E630.7.0 as new E715.]

*E715 Bulk Parcel Post*

[Reserved]

* * * * *

[Add new E750 as follows:]

*E750 Destination Entry*

[Add new heading E751 to read as follows:]

*E751 Parcel Select*

[Redesignate E652.1.0 as E751.1.0.]

1.0 BASIC STANDARDS

**1.1 Definitions**

[Amend 1.1 to change cross reference M630 to M710; no other changes to text.]

[Amend 1.2c to add provisions for PVDS mailings to read as follows:]

**1.2 General**

For Parcel Post mailings claimed at DBMC, DSCF, or DDU rates, pieces must meet the applicable standards in 1.0 through 6.0 and the following criteria:

* * * * *

c. Be part of a single mailing of 50 or more pieces that are eligible for and claimed at any Parcel Post rate or rates. When Parcel Post mailings are submitted under PVDS procedures, mailers may use the total of all line items for all destinations on a PVDS register or PVDS postage statement to meet the respective 50-piece minimum volume requirement for destination entry rate mailings. This means that a mailer may enter fewer than 50 pieces at an individual destination, provided there is a total of at least 50 Parcel Post pieces for all of the entry points for that single mailing job listed on the PVDS register or PVDS postage statement.

**1.3 DBMC Rates**

[Amend 1.3 to replace M630 with M710; no other changes to text.]

**1.4 DSCF and DDU Rates**

[Amend 1.4a and b to replace M630 with M710; no other changes to text.]

**1.5 Postage Payment**

[Amend 1.5 to change class name from ''Standard Mail (B)'' to ''Package Services'' and change P750 to P950 as cross reference for plant-verified drop shipments; no other changes to text.]

* * * * *

[Redesignate E652.2.0 as E751.2.0.]

2.0 PREPARATION

* * * * *

**2.2 Containers**

[Amend 2.2a and b to replace the two references to M630 with M710 and M722, respectively; amend 2.2c to replace M630 with M710; no other changes to text.]

[Redesignate E652.3.0 as E751.3.0; no change to text.]

[Redesignate E652.4.0 through 4.13 as E751.4.0 through 4.13 and amend to read as follows:]

4.0 DEPOSIT

* * * * *

**4.2 Mail Separation and Presentation**

[Amend 4.2 to change the reference from P750 to P950; in 4.2a and b change references from M630 to M710; and in 4.2b change the references from P710, P720, and P730 to P910, P920, and P930, respectively; no other changes to text.]

* * * * *

**4.4 Appointments**

[Amend 4.4a to clarify that an exception exists for shipments containing 100% Periodicals and shipments of perishables, and amend 4.4d by changing ''Standard Mail (B)'' to ''Package Services'' to read as follows:]

Appointments must be made for destination entry rate mail as follows:

a. Except for local mailers, for shipments containing 100% Periodicals mail and for mailings of perishable commodities (C022) under 4.5, appointments for deposit of destination entry rate mail at BMCs, ASFs, and SCFs must be scheduled through the appropriate appointment control center at least one day in advance. * * *

* * * * *

d. When Periodicals are transported together with Standard Mail or Package Services mail as a mixed load (E250), an appointment must be obtained for deposit at a destination entry facility.

**4.5 Exceptions to Scheduling Standard**

[Redesignate the text of current 4.5 as 4.5a and add new 4.5b and c to clarify that scheduling exceptions are also made for shipments containing 100% Periodicals and shipments of perishables to read as follows:]

a. The scheduling standard in 4.4 does not apply when a mailer deposits mailings for verification and acceptance at the local post office serving the facility where the mail was prepared, if the mailings are not verified under a plant load authorization or plant-verified drop shipment postage payment system authorization. Under this exception, the mailer may claim the DBMC rates for mailings or portions of such mailings deposited at the local post office if the local post office is the DBMC/ASF or designated SCF that meets the application standards.

b. Exceptions to the scheduling standard are made for shipments of products recognized by the Postal Service as perishables under C020. While an appointment is not required for shipments of perishables, the destination facility must be notified at least 24 hours in advance of deposit to facilitate timely handling of the load.

c. No appointment is required for shipments containing 100% Periodicals mail, nor is notification to the destination facility of their arrival required. An advance notice of 24 hours is recommended to facilitate the development of facility unloading schedules.

* * * * *

[Redesignate E652.5.0 as E751.5.0; no changes to text.]

[Redesignate E652.6.0 and Exhibit E652.6.0 as E751.6.0 and Exhibit E751.6.0; no changes to text.]

[Redesignate E652.7.0 and Exhibit E652.7.0 as E751.7.0 and Exhibit E751.7.0 and change the class name to Package Services; no other changes to text.]

[Redesignate E652.8.0 and Exhibit E652.8.0 as E751.8.0 and Exhibit E751.8.0; no other changes to text.]

[Add new E752 to read as follows:]

*E752 Bound Printed Matter*

1.0 BASIC STANDARDS

**1.1 General**

Destination entry rates apply to Presorted and Carrier Route Bound Printed Matter (BPM) that is deposited at a destination bulk mail center (DBMC), destination sectional center facility (DSCF), or destination delivery unit (DDU) as specified below. Eligibility for a destination entry rate is determined by the sort level, processing category of the mail, and the type of container the mail is in (*i.e.,* sacked or palletized). Each piece can claim only one destination entry rate; an individual pallet may contain pieces claimed at different destination entry rates. There are no destination entry rates for single-piece BPM.

**1.2 Volume**

Each destination entry rate mailing must contain at least 300 pieces of Presorted BPM or 300 pieces of Carrier Route BPM. Each group of destination entry rate pieces prepared for deposit at different destination post offices must be presented as separate mailings meeting separate minimum volume

requirements. Separate Presorted and Carrier Route BPM mailings may be co-palletized under M041 and M045. Pieces deposited at the same postal facility, but claimed at different destination entry rates, may be included in a single mailing and reported on the same postage statement (subject to one minimum volume requirement), if the destination entry post office is the proper facility for claiming each of the destination entry discounts. Alternatively, when Presorted BPM or Carrier Route BPM mailings are submitted under PVDS procedures, mailers may use the total of all line items for all destinations on a PVDS register or PVDS postage statement to meet the 300-piece minimum volume requirements for Presorted and Carrier Route mailings. This means that a mailer may enter fewer than 300 pieces per Presorted or Carrier Route mailing at an individual destination, provided there is a total of at least 300 Presorted rate pieces and/or 300 Carrier Route rate pieces for all of the entry points for that single mailing job listed on the PVDS register or PVDS postage statement.

**1.3 Postage**

Postage payment for destination entry mailings is subject to the same standards that apply generally to BPM. Postage and fees are paid to the post office that verifies the mailings.

**1.4 Mailing Fee**

A destination entry mailing fee (R700) must be paid once each 12-month period at each postal facility where the mailing(s) are verified. The fee may be paid in advance only for the next 12-month period and only during the last 60 days of the current service period. The fee charged is that in effect on the date of payment.

**1.5 Documentation**

Each mailing must be accompanied by the appropriate Form 3605 and, if applicable, Form 8125. No additional documentation is required for destination entry rates.

**1.6 Plant Loads**

Plant load mailings, including expedited plant load shipments, are not eligible for destination entry discounts.

2.0 DESTINATION BULK MAIL CENTER (DBMC) RATES

**2.1 General Eligibility**

Pieces in a mailing meeting the standards in 1.0, 2.0, and 5.0 through 7.0 are eligible for the DBMC rate when they meet all of the following conditions:

a. Are eligible for and prepared to qualify for Presorted or Carrier Route rates, subject to the corresponding standards for those rates.

b. Are deposited at a BMC or ASF.

c. Are addressed for delivery to one of the 3-digit ZIP Codes served by the BMC or ASF where deposited that are listed in Exhibit E751.1.3.

d. Are placed in a sack or pallet that is labeled to the BMC or ASF where deposited, or labeled to a postal facility within that BMC's or ASF's service area (see Exhibit E751.1.3).

**2.2 Presorted Flats**

Presorted flats in sacks or on pallets at all sort levels may claim DBMC rates. Separate mixed ADC sacks must be prepared for flats eligible for and claimed at the DBMC rate and for flats not claimed at the DBMC rate. Use the ''label to'' ZIP Code of the ADC to assign ADC packages to the respective mixed ADC sack. Use the address on the mailpieces to assign pieces to the respective mixed ADC package. All pieces in an ADC sack or in a palletized ADC package are eligible for the DBMC discount if the ADC facility ZIP Code (as shown in Line 1 of the corresponding sack label or the ADC facility that is the destination of the palletized ADC package as would be shown on an ADC sack label for that facility using DMM L004, Column B) is within the service area of the BMC or ASF at which the sack is deposited. Mail must be entered at the appropriate facility under 2.1.

**2.3 Presorted Machinable Parcels**

Presorted machinable parcels in sacks or on pallets at all sort levels may claim DBMC rates. Machinable parcels palletized under M045 or sacked under M722 may be sorted to destination BMCs under L601 or to destination BMCs and ASFs under L601 and L602. Sortation of machinable parcels to ASFs is optional but is required for the ASF mail to be eligible for DBMC rates. Mailers may opt to sort some or all machinable parcels for ASF service area ZIP Codes to ASFs only when the mail will be deposited at the respective ASFs where the DBMC rate are claimed, under applicable volume standards, using L602. Mailers also may opt to sort machinable parcels only to destination BMCs under L601. When machinable parcels are sorted under L601, only mail for 3-digit ZIP Codes served by a BMC as listed in Exhibit E751.1.3 are eligible for DBMC rates (*i.e.,* mail for 3-digit ZIP Codes served by an ASF in Exhibit E751.1.3 are not eligible for DBMC rates, nor are 3-digit ZIP Codes that do not appear on Exhibit E751.1.3). Machinable parcels prepared in mixed BMC sacks or on mixed BMC pallets that are sorted to the origin BMC under M045 or M722 are eligible for the DBMC rates if both of the following conditions are met: 1) the mixed BMC sack or pallet is entered at the origin BMC facility to which it is labeled, and 2) the pieces are for 3-digit ZIP Codes listed as eligible destination ZIP Codes for that BMC in Exhibit E751.1.3.

**2.4 Presorted Irregular Parcels**

Presorted irregular parcels in sacks or on pallets at all sort levels may claim DBMC rates. All pieces in an ADC sack or in a palletized ADC package are eligible for the DBMC discount if the ADC facility ZIP Code (as shown in Line 1 of the corresponding sack label or the ADC facility that is the destination of the palletized ADC package as would be shown on an ADC sack label for that facility using DMM L004, Column B) is within the service area of the BMC at which the sack is deposited under E751.5.6. Separate mixed ADC sacks must be prepared for pieces eligible for and claimed at the DBMC rate and for parcels not claimed at the DBMC rate. Use the ''label to'' ZIP Code for the ADC to assign ADC packages to the respective mixed ADC sack. Use the address on the parcels to assign parcels to the respective mixed ADC package or sack, as appropriate. Mail must be entered at the appropriate facility under 2.1.

**2.5 Carrier Route Flats**

Carrier Route flats in sacks or on pallets at all sort levels may claim DBMC rates. Mail must be entered at the appropriate facility under 2.1.

**2.6 Carrier Route Machinable Parcels**

Carrier Route machinable parcels in individual carrier route sacks may claim DBMC rates. Mail must be entered at the appropriate facility under 2.1.

**2.7 Carrier Route Irregular Parcels**

Carrier Route irregular parcels in sacks at both sort levels or on pallets at all sort levels may claim DBMC rates. Mail must be entered at the appropriate facility under 2.1.

3.0 DESTINATION SECTIONAL CENTER FACILITY (DSCF) RATES

**3.1 General Eligibility**

Pieces in a mailing meeting the standards in 1.0, 3.0, and 5.0 through 7.0 are eligible for the DSCF rate when they meet all of the following conditions:

a. Are eligible for and prepared to qualify for Presorted or Carrier Route rates, subject to the corresponding standards for those rates.

b. Are deposited at an SCF listed in L005, except that machinable parcels prepared on pallets for the 5-digit ZIP Codes listed in Exhibit E751.6.0 must be entered at the corresponding BMC facility shown in that Exhibit (not at the SCF) unless an exception is requested and granted. An exception to Exhibit E751.6.0 must be requested at least 15 days in advance of the mailing in writing from the Area Manager, Operations Support, who has jurisdiction over the BMC and SCF. Exceptions, if granted, will be for a limited time.

c. Are addressed for delivery to one of the 3-digit ZIP Codes served by the SCF where deposited under L005.

d. Are placed in a sack or pallet that is labeled to the SCF where deposited, or labeled to a postal facility within that SCF's service area (see L005).

**3.2 Presorted Flats**

Presorted flats in sacks for the 5-digit, 3-digit, and optional SCF sort levels or on pallets at the optional 5-digit scheme, 5-digit, optional 3-digit, SCF, and ASF sort levels may claim DSCF rates. Mail must be entered at the appropriate facility under 3.1.

**3.3 Presorted Machinable Parcels**

Presorted machinable parcels in sacks or on pallets at the 5-digit sort level may claim DSCF rates. For palletized mail, see 3.1b. Mail must be entered at the appropriate facility under 3.1.

**3.4 Presorted Irregular Parcels**

Presorted irregular parcels in sacks at the 5-digit, 3-digit, and optional SCF sort levels, or on pallets at the 5-digit, optional 3-digit, SCF, and ASF sort levels may claim DSCF rates. Mail must be entered at the appropriate facility under 3.1.

**3.5 Carrier Route Flats**

Carrier route flats in sacks at all sort levels or on pallets at optional 5-digit scheme carrier routes, 5-digit carrier routes, optional 3-digit, SCF, and ASF sort levels may claim DSCF rates. Mail must be entered at the appropriate facility under 3.1.

**3.6 Carrier Route Machinable Parcels**

Carrier Route machinable parcels in individual carrier route sacks may claim DSCF rates. Mail must be entered at the appropriate facility under 3.1.

**3.7 Carrier Route Irregular Parcels**

Carrier Route irregular parcels in sacks at both sort levels or on pallets at the 5-digit, optional 3-digit, SCF, and ASF sort levels may claim DSCF rates. Mail must be entered at the appropriate facility under 3.1.

4.0 DESTINATION DELIVERY UNIT (DDU) RATES

**4.1 General Eligibility**

Pieces in a mailing meeting the standards in 1.0 and 4.0 through 7.0 are eligible for the DDU rate when they meet all of the following conditions:

a. Are eligible for and prepared to qualify for Presorted or Carrier Route rates, subject to the corresponding standards for those rates.

b. Are addressed for delivery within the ZIP Code(s) served by the destination delivery unit.

c. Are deposited:

(1) For Carrier Route flats, at the DDU where the carrier cases the mail, as shown in the Drop Shipment Product.

(2) For Presorted flats, the Drop Shipment Product must be used to determine the correct destination entry facility for the 5-digit sorted flats entered at Presorted rates. If the Drop Shipment Product lists multiple facilities for a single 5-digit ZIP Code, then the mailer must inquire about the correct drop site when contacting the DDU to schedule an appointment.

(3) For all irregular parcels and machinable parcels, the Drop Shipment Product must be used to determine the 5-digit destination. When the Drop Shipment Product shows that mail for a single 5-digit ZIP Code area is delivered out of more than one postal facility, use the facility from which the majority of city carrier routes are delivered as the facility at which the DDU parcels must be entered and to determine whether that facility can handle pallets, unless the 5-digit ZIP Code is listed in Exhibit E751.7.0 or Exhibit E751.8.0. For ZIP Codes in Exhibit E751.7.0 and Exhibit E751.8.0, use the name of the facility associated with the 5-digit ZIP Code on the respective exhibit as the facility at which DDU mail must be entered for that 5-digit ZIP Code. This facility name should be used along with the Drop Shipment Product to determine if that facility can handle pallets. If a DDU facility cannot handle pallets and a mailer transports mail to the DDU facility on pallets, the driver must unload the pallets into a container specified by the delivery unit.

**4.2 Presorted Flats**

Presorted flats that weigh more than 1 pound in 5-digit sacks, on optional 5-digit scheme or required 5-digit pallets, or prepared as bedloaded 5-digit packages may claim DDU rates. Mail must be entered at the appropriate facility under 4.1. Presorted flats weighing 1 pound or less are not eligible for DDU rates.

**4.3 Presorted Machinable Parcels**

Presorted machinable parcels in 5-digit sacks or on 5-digit pallets may claim DDU rates. Mail must be entered at the appropriate facility under 4.1.

**4.4 Presorted Irregular Parcels**

Presorted irregular parcels in 5-digit sacks, on 5-digit pallets, or prepared as bedloaded 5-digit packages may claim DDU rates. Mail must be entered at the appropriate facility under 4.1.

**4.5 Carrier Route Flats**

Carrier Route flats in sacks, on optional 5-digit carrier routes scheme and 5-digit carrier routes pallets, or prepared as bedloaded carrier route packages may claim DDU rates. Mail must be entered at the appropriate facility under 4.1.

**4.6 Carrier Route Machinable Parcels**

Carrier Route machinable parcels sorted to carrier route sacks may claim DDU rates. Mail must be entered at the appropriate facility under 4.1.

**4.7 Carrier Route Irregular Parcels**

Carrier Route irregular parcels in sacks at both sort levels, on 5-digit pallets, or prepared as bedloaded packages may claim DDU rates. Mail must be entered at the appropriate facility under 4.1.

5.0 VERIFICATION

**5.1 Place**

As directed by the postmaster, the mailer must present destination entry mailings to USPS employees for verification either:

a. At the origin mailer's plant or the origin post office serving the mailer's plant under an authorized plant-verified drop shipment system.

b. At the destination post office or business mail entry unit.

**5.2 Mail Separation and Presentation**

Destination entry rate mail must be verified under a PVDS system (P950) or be presented for verification and acceptance at a BMEU located at a destination BMC, destination SCF, or other designated destination postal facility. Only plant-verified drop shipments may be deposited at a destination delivery unit not co-located with a post office or other postal facility having a business mail entry unit. When presented to the USPS, destination entry mailings must meet the following requirements:

a. Each mailing must be separated from other mailings for verification. For PVDS, destination entry rate mailings for deposit at one destination postal

facility must be separated from mailings for deposit at other facilities to allow for reconciliation with each accompanying Form 8125, 8125–C, or 8125–CD.

b. Mail must be separated from freight transported on the same vehicle.

c. If Periodicals mail is on the same vehicle as BPM, then the Periodicals mail should be loaded toward the tail of the vehicle so that, for each destination entry, Periodicals mail can be offloaded first.

d. Form 8125, 8125–C, or 8125–CD must accompany all PVDS mailings.

**5.3 Form 8125**

When mailings are verified and paid for at a postal facility different from the one at which they are accepted as mail and deposited into the mailstream, the mailer must ensure that they are accompanied by a Form 8125 completed by the mailer and the verifying post office.

**5.4 At BMC**

For a mailing to be verified at a BMC, the post office where the mailer's account or license is held must be within the service area of that BMC. The post office must authorize the BMC to act as its agent by sending Form 4410 to the BMC.

**5.5 PVDS Seal**

The mailer may ask that a PVDS band seal secure the vehicle containing verified mailings before dispatch to the destination facility.

**5.6 Mailer Transport**

The mailer must transport the PVDS mailing from the place where it was verified to the destination postal facility.

**5.7 Volume Standards**

Except as permitted for a local mailer under 7.0, destination entry mailings are subject to these volume standards:

a. Regardless of total volume, the pieces for which a destination rate is claimed must represent more than 50% of the mail (by weight or pieces, whichever is greater) presented by the same mailer within any 24-hour period. For this standard, mailer is the party presenting the material to the USPS (or for whom a transportation company has presented the material to the USPS).

b. The same mailer may not in a 24-hour period present for verification and acceptance more than four destination rate mailings at the same destination postal facility (or at another acting as its agent). The mailer may ask for a waiver of this limit when scheduling the deposit of the mailings. There is no maximum for plant-verified drop shipments.

6.0 DEPOSIT

**6.1 When, Where**

Each mailing claimed at a destination rate must be deposited at the time and location specified by the USPS. Mailings must be presented in vehicles that are compatible with dock, yard, and DDU operations, as applicable.

**6.2 Freight**

Drop shipments are freight until deposited and accepted as mail at the destination facility.

**6.3 Appointments**

Appointments must be made for destination entry rate mail as follows:

a. Except for a local mailer under 7.0 and mailings of perishable commodities, appointments for deposit of destination entry rate mail at BMCs, ASFs, and SCFs must be scheduled through the appropriate appointment control center at least one business day in advance. Same-day appointments may be granted by a control center only through a telephone request. All appointments for BMC loads must be scheduled by the appropriate BMC control center. Appointments for SCFs and ASFs must be scheduled through the appropriate district control center. Appointments may be made up to 30 calendar days before a desired appointment date. The mailer must adhere to the scheduled mail deposit time and location. The mailer must cancel any appointment by notifying the appropriate control center at least 24 hours in advance of a scheduled appointment.

b. Electronic appointments may be made through the Dropship Appointment System (DSAS) by a mailer or agent using a USPS-issued computer logon ID. Electronic appointments or cancellations must be made at least 12 hours before the desired time and date. All information required by the USPS appointment system regarding a mailing must be provided.

c. For deposit of DDU mailings, an appointment must be made by contacting the DDU at least 24 hours in advance. If the appointment must be canceled, the mailer must notify the DDU at least one business day in advance of a scheduled appointment. Recurring appointments are allowed if shipment frequency is once a week or more often.

d. When Periodicals are transported together with BPM as a mixed load (E250), an appointment must be obtained for deposit at a destination entry facility.

**6.4 Advance Scheduling**

Except under 7.0, a mailer must schedule deposit of destination entry rate mailings at least 24 hours in advance by contacting the proper district or BMC control center or destination delivery unit. Appointments at delivery units must be made by calling the delivery unit at least 24 hours in advance. Appointments for ASFs, SCFs, or for any multistop loads must be made through the USPS district control center or DSAS in 6.3. Appointments for BMC loads must be scheduled by the proper BMC control center. When making an appointment, or as soon as available, the mailer must provide the control center or DDU with the following information:

a. Mailer's name and address and, when applicable, the name and telephone number of the mailer's agent or local contact.

b. Description of what is being mailed, product name, number of mailings, volume of mail, how prepared and whether containerized (*e.g.*, pallets). For DDU entries, the mailer also must provide the 5-digit ZIP Code(s) of the mail being deposited.

c. Where the mailing was verified.

d. Postage payment method.

e. Requested date and destination facility for mailing.

f. Vehicle identification number, size, and type.

**6.5 Adherence to Schedule**

The mailer must follow the scheduled deposit time or cancel the appointment by notifying the designated control center. Destination facilities may refuse acceptance or deposit of unscheduled mailings or shipments that arrive more than 2 hours after the scheduled appointment at ASFs, BMCs, or SCFs or more than 20 minutes at delivery units.

**6.6 Redirection by USPS**

A mailer may be directed to transport destination entry rate mailings to a facility other than the designated DDU, SCF, or BMC due to facility restrictions, building expansions, peak season mail volumes, or emergency constraints.

**6.7 Redirection at Mailer's Request**

For service reasons, a mailer may ask to transport destination SCF rate mail to a facility other than the designated SCF. This exception may be approved only by the district control center serving the destination facility. To qualify for the SCF rate in this situation, mail deposited at a facility other than the SCF must destinate for processing within that facility and must not require backhauling to the SCF.

**6.8 Recurring Appointments**

Recurring appointments refer to a drop shipment that is delivered to a destination office with a frequency of at least once a week on the same time and day(s). Mailings must be of a comparable product in terms of mail class, size, volume, and containerization (pallets, pallet boxes, etc.). A request to establish recurring appointments must be written on company letterhead to the postal facility manager/postmaster. The drop shipment appointment control office/postmaster will respond to all requests within 10 days. Recurring appointments may be made for a period not to exceed 6 months. Thereafter, a new application must be submitted to ensure that up-to-date mailer information is on file. Written request for an additional 6 months may be made within 60 days prior to the expiration of a current arrangement. Failure to adhere to scheduled appointments or other abuse of the procedures will result in revocation of recurring appointment privileges. Requests for recurring appointments must include the following:

a. Name, address, and telephone number of the mailer.

b. Transportation agent's name (contact person) and telephone number(s).

c. Mail volume and preparation (trays/sacks/parcels).

d. Containerization.

e. Size and type of trailer(s) transporting mail.

f. Frequency/schedule.

**6.9 Vehicle Unloading**

Unloading of destination entry mailings is subject to these conditions:

a. Properly prepared containerized loads (*e.g.*, pallets) are unloaded by the USPS at BMCs, ASFs, and SCFs. The USPS does not unload or permit the mailer (or mailer's agent) to unload palletized loads that are unstable or severely leaning or that have otherwise not maintained their integrity in transit.

b. At BMCs, and ASFs, the driver must unload bedloaded shipments within 8 hours of arrival. Combination containerized and bedloaded mailings are classified as bedloaded shipments for unload times. The USPS may assist in unloading.

c. At delivery units, the driver must unload all mail within 1 hour of arrival. If pallets (including pallet boxes on pallets) are stacked, the driver is required to unload, unstack, and unstrap them. If a mailer transports palletized mail (including sacks on pallets) to a DDU facility that cannot handle pallets, then the driver must unload the pallets into a container specified by the delivery unit.

d. When driver unloading is required, the driver or assistant must stay with and continue to unload the vehicle once at the dock.

e. The driver must remove the vehicle from USPS property after unloading. The driver and assistant are not permitted in USPS facilities except for the dock and designated driver rest area.

**6.10 Demurrage**

The USPS is not responsible for demurrage or detention charges incurred by a mailer who presents destination entry rate mailings.

**6.11 Appeals**

Mailers who believe they are denied equitable treatment may appeal to the manager, Customer Service (district), responsible for the destination postal facility.

7.0 EXCEPTION FOR LOCAL MAILER

The restrictions in 5.7 and 6.3 do not apply when a mailer deposits mailings for verification and acceptance at the local post office serving the facility where the mail was prepared, if the mailings are not verified under a plant load authorization or plant-verified drop shipment postage payment authorization. Under this exception, the mailer may claim the destination entry rates for mailings or portions of mailings deposited at the local post office that meet the standards in 2.0, 3.0, or 4.0.

[Add new E753 for combining Package Services parcels to read as follows:]

*E753 Combining Package Services Parcels for DSCF and DDU Entry 1.0*

1.0 COMBINING PARCELS

Package Services parcels—Parcel Post, Parcel Select, Bound Printed Matter, Media Mail, and Library Mail—may be combined, at the mailer's option and when authorized by the USPS, in the same 5-digit sack(s) or pallet(s) for entry either at a destination sectional center facility (DSCF) or a destination delivery unit (DDU). All applicable fees for presort and drop shipment must be paid and applicable minimum volume requirements for Presort rates and Parcel Select rates must be met. Combined Package Services mailings must meet the standards in E750, except as provided by this section. Parcels may not be combined for entry at a destination bulk mail center (DBMC). Carrier Route Bound Printed Matter may not be combined with other parcels under these standards. Presorted Media Mail and Presorted Library Mail claimed at BMC rates may not be combined with other parcels under these standards. Parcels combined under these standards are not eligible for the barcoded discount.

**1.1 Basic Standards**

Package Services parcels that qualify as machinable, nonmachinable, and irregular under C050 and meet the following conditions may be combined in the same 5-digit sack(s) or pallet(s) under these conditions:

a. Minimum volume requirements for Parcel Select, Presorted Bound Printed Matter, Presorted Library Mail, and Presorted Media Mail must be met separately before combining.

b. Postage must be paid via permit imprint under an approved manifest mailing system as provided in P910.

c. All parcels must be prepared in sacks under 2.0 or on pallets under 3.0. For mail entered at the DSCF rates, pallet preparation is not permitted for 5-digit ZIP Codes that are unable to handle pallets. Refer to the Drop Ship Product maintained by the National Customer Support Center (NCSC) (see G043) to determine which 5-digit delivery facilities can handle pallets. If a DDU facility cannot handle pallets, and a mailer transports mail to the DDU facility on pallets, the driver will have to unload the pallets into a container specified by the delivery unit.

d. Pieces may be claimed at single-piece rates, Presorted rates, and destination entry rates under 2.1 or 3.1.

e. Separate postage statements must be prepared for each subclass and destination entry rate as appropriate.

f. The deposit of combined Package Services mail at a DSCF or DDU must be in accordance with applicable drop shipment standards.

**1.2 Authorization**

Mailers apply for RCSC authorization to combine parcels as part of a manifest mailing agreement (P910). Current manifest mailers can apply for additional authorization to combine parcels. This authorization may not exceed two years.

2.0 COMBINED PARCELS PREPARED IN SACKS

**2.1 Rate Eligibility**

In addition to the applicable standards in E750 for destination entry Package Services, the following standards apply for combined Package Services mail prepared in sacks:

a. Parcel Select DSCF rates apply to parcels that are contained in 5-digit sacks, each containing at least 10 pieces of any combination of Package Services mail, or contained in overflow sacks

under 2.2, provided all other requirements for the DSCF rate in E751 are met. Parcel Select DDU rates apply to parcels that are contained in 5-digit sacks, each containing at least 10 pieces of any combination of Package Services mail, or contained in overflow sacks under 2.2, provided all other requirements for the DDU rate in E751 are met.

b. Presorted Bound Printed Matter DSCF rates apply to parcels that are contained in 5-digit sacks, each containing at least 10 pieces of any combination of Package Services mail, or contained in overflow sacks under 2.2, provided all other requirements for the DSCF rate in E752 are met. Presorted Bound Printed Matter DDU rates apply to parcels that are contained in 5-digit sacks, each containing at least 10 pieces of any combination of Package Services mail, or contained in overflow sacks under 2.2, provided all other requirements for the DDU rate in E752 are met.

c. Presorted Library Mail 5-digit rates apply to parcels that are contained in 5-digit sacks, each containing at least 10 pieces of any combination of Package Services mail, or contained in overflow sacks under 2.2.

d. Presorted Media Mail 5-digit rates apply to parcels that are contained in 5-digit sacks, each containing at least 10 pieces of any combination of Package Services mail, or contained in overflow sacks under 2.2.

e. Single-piece rate Parcel Post, Bound Printed Matter, Library Mail, and Media Mail parcels that are contained in 5-digit sacks, each containing at least 10 pieces of any combination of Package Service mail, or contained in overflow sacks under 2.2, qualify for their applicable single-piece rates.

**2.2 Sack Preparation**

Only 5-digit sacks may be prepared. Each sack of combined Package Services mail must contain at least 10 pieces. One overflow sack containing fewer than 10 pieces is permitted per 5-digit destination.

**2.3 Sack Labeling**

Sack labels must be prepared as follows:

a. For Line 1, use 5-digit ZIP Code on mail.

b. For Line 2, use ''PSVC PARCELS 5D.''

3.0 COMBINED PARCELS PREPARED ON PALLETS

**3.1 Rate Eligibility**

In addition to the applicable standards in E750 for destination entry Package Services, the following standards apply for combined Package Services mail prepared on pallets:

a. Parcel Select DSCF rates apply to pieces that are prepared on 5-digit pallets, each containing at least 50 pieces and 250 pounds or 36 inches of Package Services mail, or contained in overflow sacks under 3.3, and deposited at a DSCF under E751. Parcel Select DDU rates apply to pieces that are prepared on 5-digit pallets, each containing at least 50 pieces and 250 pounds or 36 inches of Package Services mail, or contained in overflow sacks under 3.3, and deposited at a DDU under E751.

b. Presorted Bound Printed Matter DSCF rates apply to pieces that are prepared on 5-digit pallets, each containing at least 50 pieces and 250 pounds or at least 36 inches of Package Services mail, or contained in overflow sacks under 3.3, and deposited at a DSCF under E752. Presorted Bound Printed Matter DDU rates apply to pieces that are prepared on 5-digit pallets, each containing at least 50 pieces and 250 pounds or at least 36 inches of Package Services mail, or contained in overflow sacks under 3.3, and deposited at a DDU under E752.

c. Presorted Library Mail 5-digit rates apply to pieces that are prepared on 5-digit pallets, each containing at least 50 pieces and 250 pounds or 36 inches of Package Services mail, or contained in overflow sacks under 3.3.

e. Presorted Media Mail 5-digit rates apply to pieces that are prepared on 5-digit pallets, each containing at least 50 pieces and 250 pounds or 36 inches of Package Services mail, or contained in overflow sacks under 3.3.

f. Single-piece rate Parcel Post, Bound Printed Matter, Library Mail, and Media Mail parcels that are prepared on 5-digit pallets, each containing at least 50 pieces and 250 pounds or 36 inches of Package Services mail, or contained in overflow sacks under 3.3, qualify for their applicable single-piece rates.

**3.2 Pallet Preparation**

Only 5-digit pallets may be prepared. Each 5-digit pallet of combined Package Services mail must contain at least: (1) 50 parcels and 250 pounds of mail, or (2) 36 inches mail (excluding the height of the pallet). Pallets prepared using either minimum requirement may be combined in the same mailing.

**3.3 Overflow Sacks**

If, after filling a pallet(s) to a 5-digit destination, pieces remain that do not meet the minimum pallet requirements, they may be prepared in 5-digit overflow sacks and labeled under 2.2.

**3.4 Pallet Labeling**

Pallet labels must be prepared as follows:

a. For Line 1, use city, state, and 5-digit ZIP Code on mail.

b. For Line 2, use ''PSVC PARCELS 5D.''

4.0 DOCUMENTATION

Separate postage statements are required for each of the separate mailings contained within the combined mailing. All postage statements must be provided at the time of mailing and must be accompanied by a RCSC approved manifest prepared in accordance with P910 and this section.

**F FORWARDING AND RELATED SERVICES**

**F000 Basic Services**

*F010 Basic Information*

* * * * *

3.0 DIRECTORY SERVICE

[Amend 3.0d by replacing ''Standard Mail (B)'' with ''Package Services''; no other changes to text.]

4.0 BASIC TREATMENT

* * * * *

**4.5 Special Services**

[Amend 4.5 by revising 4.5b to add instructions for treatment of insured Standard Mail; revise 4.5c by deleting the last sentence, and add new item e to read as follows:]

Mail with special services is treated according to the charts for each class of mail in 5.0, except that:

* * * * *

b. All insured First-Class Mail is forwarded and returned at no additional cost. All insured Standard Mail and Package Services mail is forwarded or returned.

c. Parcels with special handling that are undeliverable as originally addressed and forwarded to the addressee continue to receive special handling service without an additional special handling fee.

* * * * *

e. All registered mail items are treated as registered while they are being forwarded or returned.

* * * * *

[Add new 4.6 to read as follows:]

**4.6 Metered Pieces**

Mail paid by postage meter that does not have a delivery address and a return address is returned to the post office of mailing. The reason for nondelivery is attached but the address correction fee is not charged. The piece is returned to

the meter licensee upon payment of the applicable return postage.

5.0 CLASS TREATMENT FOR ANCILLARY SERVICES

[Amend 5.1 by changing ''E620'' to ''E620 and E630.'']

* * * * *

[Amend heading of 5.3 by removing ''(A)'' to read as follows:]

**5.3 Standard Mail**

[Amend 5.3 by removing ''(A)'' from ''Standard Mail (A)''; amend 5.3a by replacing ''Standard Mail (B)'' with ''Package Services'' and ''Special Standard Mail'' with ''Media Mail.''

Redesignate current items g and h, as h and i, respectively; amend redesignated i by removing ''(A)'' from ''Standard Mail (A)'' add new g to read as follows:]

Undeliverable Standard Mail is treated as described in the chart below and under these conditions:

* * * * *

g. Standard Mail with insurance, return receipt for merchandise, or Delivery Confirmation must be endorsed ''Address Service Requested,'' ''Forwarding Service Requested,'' or ''Return Service Requested.''

* * * * *

[Amend the chart in 5.3 by adding the following under ''Change Service Requested'' to read as follows:]

| Mailer endorsement | USPS action on UAA pieces |
|---|---|
| Change service requested[1] ..... | * * * * *<br>This endorsement is not available for mail with special services (*e.g.*, insured or delivery confirmation). |

[Revise heading of 5.4 to read as follows:]

**5.4 Package Services**

[Amend 5.4 by replacing ''Standard Mail (B)'' with ''Package Services.'' Remove item 5.4c. Add new item 5.4c to read as follows:]

Undeliverable Package Services is treated as described in the chart below and under these conditions:

* * * * *

c. Bound Printed Matter with no ancillary service endorsement and no special service is disposed of by USPS. It is not forwarded or returned to sender. Bound Printed Matter with no ancillary service endorsement with a special service is treated as if it is endorsed ''Forwarding Service Requested.''

* * * * *

[Amend chart in 5.4 by adding an exception for Bound Printed Matter under ''No endorsement'' to read as follows:]

| Mailer endorsement | USPS action on UAA pieces |
|---|---|
| No endorsement ..... | Same as USPS action for ''Forwarding Service Requested.'' Exception: Bound Printed Matter with no special service added is disposed of by USPS. |

* * * * *

6.0 ENCLOSURES AND ATTACHMENTS

* * * * *

[Amend heading and text of 6.2 by removing the ''(A)'' in Standard Mail; no other changes to text.]

[Revise title of 6.3 to read as follows:]

**6.3 Package Services**

[Amend 6.3 by replacing references to ''Standard Mail (B)'' with ''Package Services''; no other changes to text.]

7.0 MIXED CLASSES

[Amend introductory paragraph of 7.1, 7.1a, and 7.2 by replacing ''Standard Mail'' with ''Standard Mail or Package Services''; no other changes to text.]

* * * * *

**7.4 Parcel**

[Amend 7.4 to specify that combination parcels are returned at the Parcel Post Inter-BMC rate and by replacing ''Special Standard Mail'' with ''Media Mail'' to read as follows:]

A combination parcel containing Media Mail and Bound Printed Matter is charged postage at the Parcel Post Inter-BMC rate when forwarded or returned.

8.0 DEAD MAIL

[Amend 8.1b by replacing ''Standard Mail (A)'' with ''Standard Mail.'' Amend 8.1e by replacing ''Standard Mail (A)'' with ''Standard Mail'' and ''Standard Mail'' with ''Standard Mail and Package Services''; no other changes to text.]

* * * * *

**F020 Forwarding**

* * * * *

2.0 FORWARDABLE MAIL

* * * * *

[Amend 2.3, 2.4, and 2.6 by replacing ''Standard Mail (B)'' with ''Package Services''; no other changes to text.]

* * * * *

3.0 POSTAGE FOR FORWARDING

* * * * *

[Amend the title and contents of 3.5 by replacing ''Standard Mail (A)'' with ''Standard Mail'; no other changes to text.]

[Revise title of 3.6 to read as follows:]

**3.6 Package Services**

[Amend 3.6 by replacing ''Standard Mail (B)'' with ''Package Services''; no other changes to text.]

[Amend 3.7 by adding Delivery Confirmation and Signature Confirmation to read as follows:]

**3.7 Special Services**

Certified, collect on delivery (COD), Delivery Confirmation, insured, registered, Signature Confirmation, and special handling mail is forwarded without additional special service fees, subject to the applicable postage charge (to a domestic address only).

*F030 Address Correction, Address Change, FASTforward, and Return Services*

1.0 ADDRESS CORRECTION SERVICE

* * * * *

[Amend 1.4 by replacing ''Standard Mail'' with ''Standard Mail and Package Services''; no other changes to text.]

* * * * *

2.0 ADDRESS CHANGE SERVICE (ACS)

[Amend 2.1 by replacing ''Standard Mail'' with ''Standard Mail and Package Services''; no other changes to text.]

* * * * *

**2.5 Shipper Paid Forwarding**

[Amend 2.5 by adding a reference to the accounting fee for a postage due account to read as follows:]

Shipper Paid Forwarding is an ACS fulfillment vehicle. It allows mailers of Standard Mail machinable parcels and most Package Services mail to pay forwarding charges via approved ACS participant code(s). For information about Shipper Paid Forwarding, contact the National Customer Support Center (see G043). Mailers have the option of paying forwarding charges through a postage due advance deposit account. Mailers who choose to do so must pay an annual accounting fee.

* * * * *

4.0 SENDER INSTRUCTION

* * * * *

**4.2 Special Services**

A change-of-address order covers certified, collect on delivery (COD), insured, registered, and return receipt for merchandise mail unless the sender gives other instructions or the addressee moves outside the United States. This mail is treated as follows:

[Amend 4.2d to read as follows:]

* * * * *

d. Insured Standard Mail is forwarded and returned.

* * * * *

[Amend 4.2e by replacing ''Standard Mail (B)'' with ''Package Services''; no other changes to text.]

* * * * *

**G GENERAL INFORMATION**

**G000 The USPS and Mailing Standards**

* * * * *

*G090 Experimental Classifications and Rates*

*G091 NetPost Mailing Online*

[In G091, change all references from ''Standard Mail (A)'' to ''Standard Mail.'']

* * * * *

3.0 FUNCTIONALLY EQUIVALENT SYSTEMS

[Amend the third sentence of 3.0 to provide for an increase in the fee for certification of a system as functionally equivalent to Mailing Online from $100 to $125, to read as follows:]

* * * Certification of functional equivalence requires payment of a $125 fee and demonstration that the service in comparable to NetPost Mailing Online service and capable of all of the following as specified by the USPS: * * *

* * * * *

*G094 Ride-Along Rate for Periodicals*

1.0 BASIC ELIGIBILITY

[Amend 1.1, 1.2, and 1.3 by changing ''Standard Mail (A)'' to ''Standard Mail,'' no other changes to text.]

* * * * *

**L LABELING LISTS**

**L000 General Use**

[Amend the heading and introductory paragraph of L001 to provide for class of mail name changes and to allow use of L001 with Bound Printed Matter flats to read as follows:]

*L001 5-Digit Scheme—Periodicals Flats and Irregular Parcels, Standard Mail Flats, and Bound Printed Matter Flats*

When 5-digit scheme sort is used for Periodicals flats and irregular parcels, Standard Mail flats, and Bound Printed Matter flats, mail for the 5-digit ZIP Codes shown in Column A must be combined on pallets (packages on pallets only on merged 5-digit scheme, 5-digit scheme carrier routes, or 5-digit scheme pallets, as applicable) or in sacks (merged 5-digit scheme or 5-digit scheme carrier routes sacks, as applicable) labeled to the corresponding destination shown in Column B.

* * * * *

*L002 3-Digit ZIP Code Prefix Matrix*

This matrix provides information about 3-digit ZIP Code prefixes as follows:

[Amend the last sentence of L002d to read as follows:]

d. * * * Destination SCF Standard Mail rates, destination SCF Package Services rates, or SCF zone and per piece Periodicals rates are available only to those ZIP Code areas for which an SCF is shown.

* * * * *

*L004 3-Digit Code Prefix Groups—ADC Sortation*

[Revise the next-to-last sentence of the L004 introduction to read as follows:]

* * * To order labels from the USPS Label Printing Center, use Form 1578-B and indicate set number 008 (First-Class Mail), set number 009 (Periodicals), or set number 010 (Standard Mail and Bound Printed Matter). * * *

[In L004, replace ''[STD only]'' with ''[STD and BPM only],'' replace ''[PER and STD only]'' with ''[PER, STD, and BPM only],'' and replace ''[FCM and STD only]'' with ''[FCM, STD, and BPM only].'']

* * * * *

[Amend the heading of L600 to include Package Services to read as follows:]

**L600 Standard Mail and Package Services**

*L601 BMCs*

[Revise introductory paragraph to read as follows:]

Use this list for:

(1) Standard Mail machinable parcels except ASF mail prepared and claimed at DBMC rates.

(2) Standard Mail packages, letter trays, or sacks on pallets.

(3) Bound Printed Matter machinable parcels.

(4) Bound Printed Matter packages or sacks on pallets.

(5) Parcel Post except for ASF mail prepared and claimed at DBMC rates and non-machinable BMC Presort or OBMC Presort rate mail.

(6) Presorted Media Mail and Presorted Library Mail to BMC destinations. For labeling mixed BMC sacks and pallets, mailers must add ''MXD'' before the Column B information of the BMC serving the 3-digit ZIP Code prefix of the post office at which the mail is entered.

* * * * *

[Revise the heading of L602 to read as follows:]

*L602 ASFs*

[Revise the introductory paragraph to read as follows:]

Use this list for:

(1) Standard Mail machinable parcels if ASF mail is entered at the ASF and claimed at DBMC rates.

(2) Standard Mail packages, letter trays, or sacks on pallets.

(3) Bound Printed Matter machinable parcels if ASF mail is entered at the ASF and claimed at DBMC rates.

(4) Bound Printed Matter packages or sacks on pallets.

(5) Parcel Post machinable parcels if ASF mail is entered at the ASF and claimed at DBMC rates.

* * * * *

[Amend the title of L603 by adding ''Standard Mail'' to read as follows:]

*L603 ADCs—Irregular Standard Mail Parcels*

* * * * *

[Amend to title of L604 to indicate that the list is used only for Standard Mail irregular parcels to read as follows:]

*L604 Originating ADCs—Standard Mail Irregular Parcels*

* * * * *

**L800 Automation Rate Mailings**

* * * * *

[Amend the heading of L802 by changing ''Standard Mail (A)'' to ''Standard Mail'' to read as follows:]

*L802 BMC/ASF Entry—Periodicals and Standard Mail*

* * * * *

[Amend the heading of L803 by changing ''Standard Mail (A)'' to ''Standard Mail'' to read as follows:]

*L803 Non-BMC/ASF Entry—Periodicals and Standard Mail*

* * * * *

**M MAIL PREPARATION AND SORTATION**

**M000 General Preparation Standards**

*M010 Mailpieces*

*M011 Basic Standards*

1.0 TERMS AND CONDITIONS

**1.1 Presort Process**

[Amend the third sentence of 1.1 by replacing ''Standard Mail (A)'' with ''Standard Mail''; no other changes to text.]

* * * * *

**1.3 Preparation Instructions**

For purposes of preparing mail:

* * * * *

[M013.13 was amended in the amended final rule published in 65 FR 50054 (August 16, 2000). The section numbers in this final rule reflect those changes.]

[Redesignate 1.3f through 1.3z as 1.3h through 1.3ab, respectively, and add new 1.3f and 1.3g to read as follows:]

For purposes of preparing mail:

* * * * *

f. A less-than-full flat tray is one that contains First-Class Mail for the same destination regardless of quantity or whether a full tray was previously prepared for that destination. Less-than-full flat trays may be prepared only if permitted by the standards for the rate claimed.

g. An overflow flat tray is a less-than-full First-Class Mail tray that contains all pieces remaining after preparation of one or more full trays for the same destination. Overflow flat trays may be prepared only if permitted by the standards for the rate claimed.

* * * * *

[Amend redesignated 1.3j to provide for 5-digit/scheme carrier routes sortation for Carrier Route Bound Printed Matter, and to change ''Standard Mail (A)'' to ''Standard Mail'' to read as follows:]

j. A 5-digit/scheme carrier routes sort for carrier route rate Periodicals flats and irregular parcels, Enhanced Carrier Route rate Standard Mail flats, and Carrier Route Bound Printed Matter flats, prepared in sacks or as packages on pallets yields a 5-digit scheme carrier routes sack or pallet for those 5-digit ZIP Codes listed in L001 and 5-digit carrier routes sacks or pallets for other areas. The 5-digit ZIP Codes in each scheme are treated as a single presort destination subject to a single minimum sack or pallet volume, with no further separation by 5-digit ZIP Code required. Sacks or pallets prepared for a 5-digit scheme carrier routes destination that contain carrier route packages for only one of the schemed 5-digit areas are still considered 5-digit scheme carrier routes sorted and are labeled accordingly. The 5-digit/scheme sort is required for carrier route packages of flat-size and irregular parcel Periodicals, is optional for flat-size Enhanced Carrier Route rate Standard Mail, and is optional for Carrier Route Bound Printed Matter flats prepared in sacks or as packages on pallets. If preparation of 5-digit scheme carrier routes sacks or pallets is performed, they must be prepared for all 5-digit scheme destinations. A 5-digit/scheme carrier routes sort may be performed only for carrier route packages prepared in sacks or as packages on pallets.

[Amend redesignated 1.3k to provide for 5-digit/scheme sortation for Bound Printed Matter flats, and to change ''Standard Mail (A)'' to ''Standard Mail'' to read as follows:]

k. A 5-digit/scheme sort for Periodicals flats and irregular parcels, Standard Mail flats, and Bound Printed Matter flats prepared as packages on pallets yields 5-digit scheme pallets containing automation rate (not applicable to Bound Printed Matter) and Presorted rate 5-digit packages for those 5-digit ZIP Codes listed in L001 and yields 5-digit pallets containing automation rate (not applicable to Bound Printed Matter) and Presorted rate 5-digit packages for other areas. The 5-digit ZIP Codes in each scheme are treated as a single presort destination subject to a single minimum pallet volume, with no further separation by 5-digit ZIP Code required. Pallets prepared for a 5-digit scheme destination that contain 5-digit packages for only one of the schemed 5-digit areas are still considered 5-digit scheme sorted and are labeled accordingly. The 5-digit/scheme sort is required for flat-size and irregular parcel-size Periodicals, and is optional for flat-size Standard Mail and flat-size Bound Printed Matter that is prepared as packages on pallets and may not be used for other mail prepared on pallets, except for 5-digit packages of Standard Mail irregular parcels that are part of a mailing job that is prepared in part as palletized flats at automation rates. If preparation of 5-digit scheme pallets is performed, it must be done for all 5-digit scheme destinations.

* * * * *

[Amend the last sentence of 1.3p for clarity to read as follows:]

p. * * * The 3-digit/scheme sort is required for automation rate letter-size First-Class Mail, Periodicals, and Standard Mail and is not permitted to be used for mail entered at another rate.

* * * * *

[Amend redesignated 1.3z by replacing ''Standard Mail (A)'' with ''Standard Mail''; no other changes to text.]

[Amend the first and last sentences of 1.3aa by replacing ''Parcel Post DSCF'' with ''Parcel Select (Parcel Post) DSCF,'' and by changing ''M630'' to ''M710''; no other changes to text.]

[Amend the first and second sentences of 1.3ab by replacing ''Parcel Post DSCF'' with ''Parcel Select (Parcel Post) DSCF''; no other changes to text.]

**1.4 Mailing**

* * * * *

[Amend 1.4e by replacing ''Standard Mail (A)'' with ''Standard Mail''; no other changes to text.]

[Amend 1.4f by replacing ''Standard Mail (B)'' with ''Package Services'' and ''Special Standard'' with ''Media Mail''; no other changes in text.]

* * * * *

*M012 Markings and Endorsements*

1.0 MARKINGS—BASIC STANDARDS

**1.1 Class and Rate**

[Amend 1.1b by replacing ''Standard Mail (A)'' with ''Standard Mail''; no other changes to text.]

[Amend 1.1c by replacing ''Standard Mail (B)'' with ''Package Services''; no other changes to text.]

* * * * *

[Revise the heading of 2.0 by replacing ''Standard Mail (A)'' with ''Standard Mail''; no other change.]

2.0 MARKINGS—FIRST-CLASS MAIL AND STANDARD MAIL

**2.1 Placement**

* * * * *

[Amend 2.1b and 2.1c by replacing ''Standard Mail (A)'' with ''Standard Mail''; no other changes to text.]

* * * * *

**2.2 Exceptions to Markings**

[Amend 2.2a and 2.2b by replacing ''Standard Mail (A)'' with ''Standard Mail''; no other changes to text.]

* * * * *

[Amend the heading of 3.0 by replacing ''Standard Mail (B)'' with ''Package Services'' to read as follows:]

3.0 MARKINGS—PACKAGE SERVICES

**3.1 Basic Markings**

[Amend 3.1 by changing the subclass name from ''Special Standard Mail'' to ''Media Mail'' and eliminating the ''Library Rate'' marking to read as follows:]

The basic required Package Services subclass marking—''Parcel Post'' or ''PP,'' ''Bound Printed Matter'' or ''BPM,'' ''Media Mail,'' or ''Library Mail''—must be printed on each piece claimed at the respective rate. (The marking ''Library Rate'' may continue to be used on Library Mail until January 1, 2002. The marking ''Special Standard Mail'' (or ''SPEC STD'') may continue to be used on Media Mail until January 1, 2002.) For Parcel Post destination entry rate mail, the marking ''Parcel Select'' may be used as the basic required marking instead of ''Parcel Post.'' The basic required marking must be placed in the postage area (*i.e.,* printed or produced as part of, or directly below or to the left of, the permit imprint indicia or meter stamp or impression).

[Amend the heading of 3.2 for clarity to read as follows:]

**3.2 Additional Parcel Select (Parcel Post) Markings**

[Amend the first sentence of 3.2 to read as follows:]

Each piece in a Parcel Select (destination entry Parcel Post) mailing must bear a marking to indicate that it was mailed at a destination entry rate.

* * *

[Amend the heading of 3.3 by changing ''Other'' to ''Additional'' and revise to read as follows:]

**3.3 Additional Bound Printed Matter Markings**

Each piece of Bound Printed Matter mailed at a Presorted rate must bear the marking ''Presorted'' (or ''PRSRT'') in addition to the basic marking in 3.1. Until January 1, 2002, mailers may use the marking ''Presorted Standard'' (or ''PRSRT STD''). Each piece of Bound Printed Matter mailed at a Carrier Route rate must bear the marking ''Carrier Route Presort'' (or ''CAR–RT SORT'') in addition to the basic marking in 3.1. These additional markings may be placed in the postage area as specified in 3.1. Alternatively, these markings may be placed in the address area on the line directly above or two lines above the address if the marking appears alone, or if no other information appears on the line with the marking except postal optional endorsement line information under M013 or postal carrier route package information under M014.

[Amend the heading of 3.4 to reflect the new subclass name to read as follows:]

**3.4 Additional Media Mail Markings**

[Amend 3.4 to reflect the new subclass name to read as follows:]

Each piece of Media Mail mailed at a presorted rate must bear the required marking ''Presorted'' or ''PRSRT'' in addition to the basic marking specified in 3.1. This additional marking may be placed in the postage area as specified in 3.1. Alternatively, these markings may be placed in the address area on the line directly above or two lines above the address if the marking appears alone, or if no other information appears on the line with the marking except postal optional endorsement line information under M013.

[Amend the heading of 3.5 by changing ''Other'' to ''Additional'' and revise to read as follows:]

**3.5 Additional Library Mail Markings**

Each piece of Library Mail mailed at a presorted rate must bear the required marking ''Presorted'' or ''PRSRT'' in addition to the basic marking specified in 3.1. This additional marking may be placed in the postage area as specified in 3.1. Alternatively, these markings may be placed in the address area on the line directly above or two lines above the address if the marking appears alone, or if no other information appears on the line with the marking except postal optional endorsement line information under M013.

* * * * *

4.0 ENDORSEMENTS—DELIVERY AND ANCILLARY SERVICES

* * * * *

**4.5 OCR Read Area**

[Amend 4.5 by replacing ''Standard Mail (A)'' with ''Standard Mail''; no other changes to text.]

*M013 Optional Endorsement Lines*

1.0 USE

**1.1 Basic Standards**

[Amend the chart in 1.1 by adding the sortation level and OEL example lines for Carrier Route Bound Printed Matter to read as follows:]

| Sortation level | OEL example |
|---|---|
| * * * * * * * | |
| Carrier Route—Bound Printed Matter | * * * * * * * * * * * CAR-RT SORT**C–001 |
| * * * * * * * | |

* * * * *

2.0 FORMAT

* * * * *

**2.5 ZIP Code**

[Amend 2.5 by removing the second sentence.]

[Amend the table in 2.5 by revising the entries for ADC and mixed ADC sortation levels to read as follows:]

| Sortation level | Mail class | Labeling list |
|---|---|---|
| * | * * * * * * | * |
| ADC | First-Class Mail (except automation letters), Periodicals (except automation letters), Standard Mail (except Presorted rate irregular and machinable parcels), Presorted Bound Printed Matter (except machinable parcels). | L004 |
| ADC | Standard Mail irregular parcels | L603 |
| Mixed ADC | First-Class Mail (except automation letters) | L002, Colum C |
| Mixed ADC | Periodicals (except automation letters), Standard Mail (except Presorted rate irregular and machine parcels), Presorted Bound Printed Matter (except machinable parcels). | L004 |
| Mixed ADC | Standard Mail irregular parcels | L604 |
| * | * * * * * * | * |

* * * * *

*M014 Carrier Route Information Lines*

* * * * *

2.0 FORMAT AND CONTENT

* * * * *

**2.3 Route Code**

* * * * *

[Amend 2.3b by replacing ''Standard Mail (A)'' with ''Standard Mail''; no other changes to text.]

* * * * *

*M020 Packages*

1.0 BASIC STANDARDS

* * * * *

**1.4 Palletization**

[Amend 1.4 by removing all references to bundles to read as follows:]

Packages on pallets must be able to withstand normal transit and handling without breakage or incurring injury to USPS employees. Heavy-gauge shrinkwrap over plastic banding, shrinkwrap alone, or banding material alone is acceptable if the package can stay together during normal processing. Except for packages of individually polywrapped pieces, packages on BMC pallets must be shrinkwrapped and machinable on BMC parcel sorters. Packages of individually polywrapped pieces may be secured with banding material only. Machinability is determined by the USPS. If used, banding material must be applied at least once around the length and once around the girth; wire and metal strapping are prohibited.

[Redesignate 1.5 and 1.6 as 1.6 and 1.7 and add new 1.5 to read as follows:]

**1.5 Package Size—Bound Printed Matter**

Each ''logical'' package (the total group of pieces for a package destination) of Bound Printed Matter must meet the applicable minimum package size prescribed in M045 or M722. The pieces in the ''logical'' package must then be secured in a physical package or packages. Wherever possible, each physical package for a logical package destination should contain at least the minimum package size. The size of each physical package for a specific logical package destination may, however, contain the exact package minimum, more pieces than the package minimum, or fewer pieces than the package minimum depending on the size of the pieces in the mailing or the total quantity of the pieces to that destination. However, except for mixed ADC packages and for carrier route packages prepared in sacks, each physical package of Bound Printed Matter must contain at least two pieces. For Carrier Route rate mail prepared in sacks, the ''last physical package'' to an individual carrier route destination may consist of a single addressed piece, provided that all other packages to that carrier route destination contain at least two addressed pieces, and that the total group of pieces to that carrier route (the ''logical'' package) meets the Carrier Route rate eligibility minimum in E712. Packages prepared on pallets must meet the additional packaging requirements under M045 and each physical package, including carrier route rate mail, must always contain at least two pieces.

[Amend the heading and the introductory phrase of redesignated 1.6 to read as follows:]

**1.6 Package Size—Other Mail Classes**

Except for Bound Printed Matter, an individual physical package may be prepared with fewer than the minimum number of pieces required by the standards for the rate claimed, without loss of rate eligibility under either of these conditions:

* * * * *

[Amend heading of 2.0 by replacing ''Standard Mail (A)'' with ''Standard Mail'' to read as follows:]

2.0 ADDITIONAL STANDARDS—FIRST-CLASS MAIL, PERIODICALS, STANDARD MAIL, AND FLAT-SIZE BOUND PRINTED MATTER FLATS

**2.1 Cards and Letter-Size Pieces**

[Amend 2.1c and 2.1d by changing ''Standard Mail (A)'' to ''Standard Mail.''']

* * * * *

[Amend 2.2 by revising the second sentence to read as follows:]

**2.2 Flat-Size Pieces**

* * * Flat-size pieces must be prepared in packages except under 1.7 and, for First-Class Mail, under M820.3.0.

* * * * *

[Amend the heading of 3.0 by adding ''All,'' and amend the opening text to read as follows:]

3.0 FACING SLIPS—ALL CARRIER ROUTE MAIL

All facing slips used on carrier route packages must show this information:

* * * * *

*M030 Containers*

*M031 Labels*

* * * * *

2.0 ADDITIONAL STANDARDS—SACK LABELS

**2.1 Specifications**

[Amend 2.1a to reflect changes in mail class names to read as follows:]

A sack label must meet these specifications:

a. Color: white or manila for Priority Mail, First-Class Mail, Standard Mail, and Package Services mail; pink for Periodicals.

* * * * *

3.0 ADDITIONAL STANDARDS—TRAY LABELS PLACEMENT

* * * * *

3.2 SPECIFICATIONS

[Amend 3.2a to change ''Standard Mail (A)'' to ''Standard Mail'' to read as follows:]

A tray label must meet these specifications:

a. Color: White or manila for First-Class Mail and Standard Mail; pink for Periodicals.

* * * * *

4.0 PALLET LABELS

* * * * *

**4.2 Specifications**

[Amend 4.2 to reflect changes in mail class names to read as follows:]

Pallet labels must be pink for Periodicals mail or white for Standard Mail and Package Services mail. Pallet labels must measure at least 8 inches by 11 inches.

* * * * *

[Amend the last sentence of 4.7 (as it appeared in the final rule published in 65 FR 50054 (August 16, 2000)) to add the word ''irregular parcel'' in front of ''Bound Printed Matter,'' and to change ''processing category'' to ''5D pallet level'' to read as follows:]

**4.7 5-Digit, 5-Digit Carrier Routes, and 5-Digit Scheme Carrier Routes Pallets**

All 5-digit carrier routes or 5-digit scheme carrier routes pallets must show the words ''CARRIER ROUTES'' (or ''CR-RTS'') after the processing category description on the content line under M045, M920, M930, and M940. 5-digit pallets of Bound Printed Matter irregular parcels that contain only carrier route rate mail also must show the words ''CARRIER ROUTES'' (or ''CR-RTS'') after the ''5D'' pallet level description on the contents line under M045.

[Amend the heading of 4.8 to read as follows:]

**4.8 Automation/Nonautomation Status**

[Amend 4.8 (as it appeared in Postal Bulletin 22036, 11–2–00) by changing ''Standard Mail (A)'' to ''Standard Mail'' to read as follows:]

All Periodicals and Standard Mail 5-digit, 5-digit scheme, 3-digit, SCF, ADC, ASF, and BMC pallets must show ''BARCODED'' or ''BC'' on the contents line if the pallet contains automation rate mail as provided in M045, M920, M930, and M940. Except for machinable parcels, all Periodicals and Standard Mail 5-digit and 5-digit scheme pallets must show ''NONBARCODED'' or ''NBC'' on the contents line if the pallet contains Presorted rate mail under M045, M920, M930, and M940. Except for machinable parcels, all Periodicals and Standard Mail 3-digit, SCF, ADC, ASF, BMC, Mixed ADC, and Mixed BMC pallets must show ''NONBARCODED'' or ''NBC'' on the contents line if the pallet contains Presorted rate and/or carrier route mail under M045, M920, M930, and M940. If a pallet contains copalletized automation rate and Presorted rate mail, or, for 3-digit, SCF, ADC, ASF, BMC, Mixed ADC, or Mixed BMC pallets, contains copalletized automation rate, Presorted rate, and carrier route mail, the separate ''BARCODED'' and ''NONBARCODED'' designations may be abbreviated ''BC/NBC.'' (Note: if one of these pallets contains carrier route rate mail, but not Presorted rate mail, ''NONBARCODED'' or ''NBC'' is not required until July 15, 2001.)

[The following section was revised as M031.4.10 in the final rule published in 65 FR 50054 (August 16, 2000). Subsequent revisions to the DMM have redesignated this section as 4.9.]

**4.9 Extraneous Information**

Extraneous information is permitted no pallet labels if:

* * * * *

[Amend 4.9c to reflect changes in mail class names to read as follows:]

c. It does not appear on or between the lines reserved for USPS required information (blank lines are permitted). Exception: For combined mailings of Standard Mail and Package Services machinable parcels, mailer codes and extraneous information may appear between the content line and the post office of mailing line.

* * * * *

[The following section was added as M031.4.13 in the final rule published in 65 FR 50054 (August 16, 2000). Subsequent revisions to the DMM have redesignated this section as 4.12. Amend the title of 4.12 to delete the phrase ''or Bundle'' to read as follows:]

**4.12 Pallet Package Information**

* * * * *

5.0 SECOND LINE CODES

[Amend the chart in 5.0 to change ''Standard Mail (A)'' to ''Standard Mail,'' add ''First-Class Mail'' and code ''FCM,'' and add ''Package Services'' and code ''PSVC'' to read as follows:]

The codes shown below must be used as appropriate on Line 2 of sack, tray, and pallet labels.

| Content type | Code |
|---|---|
| Barcoded | BC |
| Barcoded and Nonbarcoded | BC/NBC |
| Carrier Route | C (type of route) |
| Carrier Routes | CR–RTS (5-digit sack and pallet designation) |
| Digit | D |
| First-Class Mail | FCM |
| Flats | FLTS |
| General Delivery Unit | G |
| Highway Contract Route | H |
| Irregular Parcels | IRREG (Periodicals, Standard Mail, and Package Services only) |
| Letters | LTRS |
| Machinable Parcels | MACH (Standard Mail and Package Services only) |
| Mixed | MXD |
| Mixed Machinable and Irregular Parcels | MACH & IRREG (Standard Mail only) |
| Nonbarcoded | NON BC (sacks)<br>NBC (pallets, and co-trayed or co-sacked mail under M910) |
| Package Services | PSVC |
| Parcels | PARCELS (First-Class Mail and Package Services only) |
| Periodicals | PER (see 1.7) NEWS (see 1.7) |
| Post Office Box Section | B |
| Rural Route | R |
| Scheme | SCH (Periodicals, Standard Mail, and (flats only) Bound Printed Matter 5-digit scheme carrier routes sacks and 5-digit scheme pallets only) |
| Standard Mail | STD |

| Content type | Code |
|---|---|
| Working | WKG |

*M032 Barcoded Labels*

1.0 BASIC STANDARDS—TRAY AND SACK LABELS

**1.1 Use**

[Amend 1.1 by replacing ''Standard Mail (A)'' with ''Standard Mail''; no other changes to text.]

* * * * *

[Amend Exhibit 1.3a, 3-Digit Content Identifier Numbers, by replacing headings ''STANDARD MAIL (A)'' with ''STANDARD MAIL,'' ''STANDARD MAIL (B)'' with ''PACKAGE SERVICES MAIL,'' ''Special Standard Mail'' with ''Media Mail,'' and making other changes in content line information to read as follows:]

| Class and mailing | CIN | Human-readable content line |
|---|---|---|
| * * * * * | * | * |
| **STANDARD MAIL** | | |
| * * * * * | * | * |
| Enhanced Carrier Route Irregular Parcels—Nonautomation: | | |
| car. rt. sacks—saturation | 599 | STD IRREG WSS[1] |
| car. rt. sacks—high density | 600 | STD IRREG WSH[1] |
| car. rt. sacks—basic | 601 | STD IRREG LOT[1] |
| 5-digit carrier routes sacks | 598 | STD IRREG CR–RTS |
| STD Irregular Parcels—Presorted: | | |
| 5-digit sacks | 590 | STD IRREG 5D |
| 3-digit sacks | 591 | STD IRREG 3D |
| ADC sacks | 592 | STD IRREG ADC |
| mixed ADC sacks | 594 | STD IRREG WKG |
| STD Machinable Parcels—Presorted: | | |
| 5-digit sacks | 670 | STD MACH 5D |
| ASF sacks | 672 | STD MACH ASF |
| BMC sacks | 673 | STD MACH BMC |
| mixed BMC sacks | 674 | STD MACH WKG |
| STD Machinable and Irregular Parcels—Presorted: | | |
| 5-digit sacks | 603 | STD MACH & IRREG 5D |
| **PACKAGE SERVICES MAIL** | | |
| Carrier Route Bound Printed Matter—Flats: | | |
| carrier route sacks | 657 | PSVC FLTS CR[1] |
| 5-digit scheme carrier routes sacks | 659 | PSVC FLTS CR–RTS SCH |
| 5-digit carrier routes sacks | 658 | PSVC FLTS CR–RTS |
| Presorted Bound Printed Matter—Flats: | | |
| 5-digit sacks | 649 | PSVC FLTS 5D NON BC |
| 3-digit sacks | 650 | PSVC FLTS 3D NON BC |
| SCF sacks | 654 | PSVC FLTS SCF NON BC |
| ADC sacks | 651 | PSVC FLTS ADC NON BC |
| mixed ADC sacks | 653 | PSVC FLTS NON BC WKG |
| Carrier Route Bound Printed Matter—Irregular Parcels: | | |
| carrier route sacks | 697 | PSVC IRREG CR[1] |
| 5-digit carrier routes sacks | 698 | PSVC IRREG CR–RTS |
| Presorted Bound Printed Matter—Irregular Parcels: | | |
| 5-digit sacks | 690 | PSVC IRREG 5D |
| 3-digit sacks | 691 | PSVC IRREG 3D |
| SCF sacks | 696 | PSVC IRREG SCF |
| ADC sacks | 692 | PSVC IRREG ADC |
| mixed ADC sacks | 694 | PSVC IRREG WKG |
| Carrier Route Bound Printed Matter—Machinable Parcels: | | |
| carrier route sacks | 687 | PSVC MACH CR[1] |
| Presorted Bound Printed Matter—Machinable Parcels: | | |
| 5-digit sacks | 680 | PSVC MACH 5D |
| ASF sacks | 682 | PSVC MACH ASF |
| BMC sacks | 683 | PSVC MACH BMC |
| mixed BMC sacks | 684 | PSVC MACH WKG |
| Presorted Media Mail and Presorted Library Mail Flats—5-Digit and BMC: | | |
| 5-digit sacks | 649 | PSVC FLTS 5D NON BC |
| BMC sacks | 652 | PSVC FLTS BMC NON BC |

| Class and mailing | CIN | Human-readable content line |
|---|---|---|
| Presorted Media Mail and Presorted Library Mail Irregular Parcels—5-Digit and BMC: | | |
| 5-digit sacks | 690 | PSVC IRREG 5D |
| BMC sacks | 693 | PSVC IRREG BMC |
| Presorted Media Mail and Presorted Library Mail Machinable Parcels—5-Digit and BMC: | | |
| 5-digit sacks | 680 | PSVC MACH 5D |
| BMC sacks | 683 | PSVC MACH BMC |
| Parcel Post Machinable Parcels: | | |
| 5-digit sacks | 680 | PSVC MACH 5D |
| ASF sacks | 682 | PSVC MACH ASF |
| BMC sacks | 683 | PSVC MACH BMC |
| mixed BMC sacks | 684 | PSVC MACH WKG |
| Parcel Post DSCF and DDU Rates: | | |
| 5-digit sacks | 688 | PSVC PARCELS 5D |
| Combined PSVC Parcels: | | |
| 5-digit sacks | 688 | PSVC PARCELS 5D |
| Combined STD & PSVC Machinable Parcels: | | |
| 5-digit sacks | 660 | STD/PSVC MACH 5D |
| ASF sacks | 662 | STD/PSVC MACH ASF |
| BMC sacks | 663 | STD/PSVC MACH BMC |
| mixed BMC sacks | 664 | STD/PSVC MACH WKG |

* * * * *

2.0 ADDITIONAL STANDARDS—BARCODED TRAY LABELS

**2.1 Paper Stock, Size, and Color**

[Amend 2.1a to replace the class name ''Standard Mail (A)'' with ''Standard Mail''; no other changes to text.]

* * * * *

3.0 ADDITIONAL STANDARDS—BARCODED SACK LABELS

[Amend 3.1a by replacing ''Standard Mail'' with ''Standard Mail and Package Services''; no other changes to text.]

* * * * *

*M033 Sacks and Trays*

1.0 BASIC STANDARDS

* * * * *

**1.2 Equipment**

[Amend 1.2a and 1.2f by replacing ''Standard Mail (A)'' with ''Standard Mail'' and amend 1.2a by adding a second sentence to read as follows:]

a. First-Class Mail flat-size pieces must be prepared in USPS flat trays with lids. The lids to these flat trays must be placed green side up.

[Amend the heading of 2.0 by replacing ''Standard Mail (A)'' with ''Standard Mail'' to read as follows:]

2.0 FIRST-CLASS MAIL, PERIODICALS, AND STANDARD MAIL

* * * * *

**2.2 Flat Tray Preparation (First-Class Mail Only)**

[Amend 2.2 by adding new f through h to read as follows:]

All flat tray preparation is subject to these standards:

* * * * *

f. For automation rate mailings prepared under the optional tray-based preparation rules in M820, one less-than-full overflow tray may be prepared for a presort destination when the total number of pieces for that destination meets the minimum for preparation of the tray level under M820, and when one or more full trays for that destination are also prepared.

g. For automation rate mailings prepared under the optional tray-based preparation rules in M820, if the total number of pieces for a presort destination meets or exceeds the minimum number of pieces required to prepare a tray for that destination, but the total volume does not physically fill a single tray, then the mail for that presort destination may be prepared in a less-than-full tray.

h. Pieces prepared as automation flats under the tray-based preparation option in M820 do not have to be grouped by 3-digit ZIP Code prefix in ADC trays or by ADC in mixed ADC trays if the mailing is prepared using an MLOCR/barcode sorter and standardized documentation is submitted.

* * * * *

*M040 Pallets*

*M041 General Standards*

* * * * *

[M041.5.0 and 6.0 were amended in the amended final rule published in 65 FR 48385 (August 8, 2000) and in the final rule published in 65 FR 50054 (August 16, 2000). The language in this final rule reflects those amendments.]

5.0 PREPARATION

**5.1 Presort**

[Amend 5.1 to change the class name from ''Standard Mail (A)'' to ''Standard Mail'' and to delete the phrase ''and bundles'' to read as follows:]

Pallet preparation and pallet sortation are subject to the specific standards in M045, M920, M930, and M940. Pallet sortation is generally intended to presort the palletized portion of a mailing to at least the finest extent required for the corresponding class of mail and method of preparation. Pallet sortation is sequential from the lowest (finest) level to the highest and must be completed at each required level before the next optional or required level is prepared. Standard preparation terms for pallets are defined in M011, standard presort levels are defined in M045, and advanced presort levels are defined in M920, M930, and M940. For sacks, trays, or machinable parcels on pallets, the mailer must prepare all required pallet levels before any mixed ADC or mixed BMC pallets are prepared for a mailing or job. Packages prepared under M045 or M920, M930, or M940 must not be placed on mixed ADC or mixed BMC pallets. Packages that cannot be placed on pallets must be prepared in sacks under the standards for the rate claimed. The standards for package reallocation to protect the SCF or BMC pallet (M045.5.0 and 6.0) are optional methods of pallet preparation designed to retain as much mail as possible at the SCF or BMC level. These standards may result in some packages of Periodical flats and irregular parcels and Standard Mail (A) flats that are part of a mailing job prepared in part as palletized flats at automation rates not being placed on the finest level of pallet possible. Mailers must use PAVE-certified presort software to prepare mailings using package reallocation (package reallocation is optional, but if

performed, it must be done for the complete mailing job).

**5.2 Required Preparation**

[Amend 5.2 to change the class name from ''Standard Mail (A)'' to ''Standard Mail'' to read as follows:]

These standards apply to:

a. Periodicals, Standard Mail, and Package Services (except for Parcel Post BMC Presort and OBMC Presort, and except for Parcel Select DSCF and DDU rate mail). A pallet must be prepared to a required sortation level when there are 500 pounds of Periodicals, Standard Mail, or Package Services mail in packages or sacks, or 500 pounds of parcels, or six layers of Periodicals or Standard Mail letter trays. For packages of Periodicals flats and irregular parcels on pallets that are prepared under the standards for package reallocation to protect the SCF pallet (M045.5.0), not all mail for a required 5-digit scheme carrier routes, 5-digit scheme, 5-digit carrier routes, or 5-digit pallet or for an optional merged 5-digit scheme, optional merged 5-digit, or optional 3-digit pallet is required to be on that corresponding pallet level. For packages of Standard Mail flats on pallets that are prepared under the standards for package reallocation to protect the SCF pallet (M045.5.0), not all mail for a required 5-digit carrier routes or 5-digit pallet or for an optional 5-digit scheme carrier routes, merged 5-digit scheme, 5-digit scheme, merged 5-digit pallet, or 3-digit pallet is required to be on that corresponding pallet level. For packages of Standard Mail flats on pallets prepared under the standards for package reallocation to protect the BMC pallet (M045.6.0), not all mail for a required ASF pallet is required to be on an ASF pallet. Mixed ADC or mixed BMC pallets of sacks, trays, or machinable parcels, as appropriate, must be labeled to the BMC or ADC (as appropriate) serving the post office where mailings are entered into the mailstream. The processing and distribution manager of that facility may issue a written authorization to the mailer to label mixed BMC or mixed ADC pallets to the post office or processing and distribution center serving the post office where mailings are entered. These pallets contain all mail remaining after required and optional pallets are prepared to finer sortation levels under M045, as appropriate.

b. Parcel Post mailed at BMC Presort, OBMC Presort, DSCF, and DDU rates. Pallets must meet the requirements specifically prescribed for these rates in M045.

**5.3 Minimum Load**

[Amend 5.3a by replacing ''Standard Mail (A)'' with ''Standard Mail'' and by changing ''M630'' to ''M710''; no other changes to text.]

* * * * *

**5.6 Mail on Pallets**

[Amend 5.6 (as it appeared in the final rule published in 65 FR 50054 (August 16, 2000)) to provide for separation of flat-size Bound Printed Matter Carrier Route mail from Presorted mail on 5-digit level pallets, to change ''Standard Mail (A)'' to ''Standard Mail,'' to remove references to ''bundles,'' and to clarify and reorganize to read as follows:]

These standards apply to mail on pallets:

a. Pieces in trays, packages, and sacks must be prepared under the standards for the class of mail and rate claimed.

b. When two or more Periodicals mailings, two or more Standard Mail mailings, or two or more Bound Printed Matter mailings are placed together on pallets, the mailer must keep records for each mailing as required by the standards for the class of mail.

c. For letter-size Standard Mail and Periodicals prepared in trays on pallets, carrier route rate mail (including automation carrier route) must be prepared on separate 5-digit pallets (5-digit carrier routes pallets) from non-carrier route automation rate or Presorted rate mail (5-digit pallets).

d. Heavier, fuller trays must be placed at the bottom of the load.

e. For Bound Printed Matter irregular parcels, Presorted and Carrier Route rate mail may be combined on all levels of pallet. For Bound Printed Matter flats, Presorted and Carrier Route rate mail may be combined on all levels of pallet except as provided in f and g.

f. For sacks of nonletter-size Periodicals mail on pallets (except for mail prepared with detached address labels), for sacks of nonletter-size Standard Mail on pallets (except for mail prepared with detached address labels and machinable parcels), and for sacks of flat-size Bound Printed Matter, carrier route rate mail must be prepared on separate 5-digit pallets (5-digit carrier routes pallets) from automation rate or Presorted rate mail (5-digit pallets).

g. For packages on pallets of nonletter-size Periodicals, nonletter-size Standard Mail, and flat-size Bound Printed matter, carrier route rate mail must be prepared on separate 5-digit pallets (5-digit carrier routes or 5-digit scheme carrier routes pallets) from automation rate or Presorted rate mail (5-digit pallets or 5-digit scheme pallets). Exception: When nonletter-size Periodicals and flat-size Standard Mail is prepared under h, carrier route rate mail, automation rate mail, and Presorted rate mail may be copalletized on the same merged 5-digit pallet or on the same merged 5-digit scheme pallet for applicable 5-digit ZIP Codes.

h. Mailers of nonletter-size Periodicals and flat-size Standard Mail that prepare packages on pallets may copalletize carrier route rate mail, automation rate mail, and Presorted rate mail on the same merged 5-digit pallet or on the same merged 5-digit scheme pallet under the conditions in M920, M930, or M940.

* * * * *

6.0 COPALLETIZED, COMBINED, OR MIXED-RATE LEVEL MAILINGS OF FLAT-SIZE PIECES

* * * * *

[Amend the heading and contents of 6.4 to change the class name from ''Standard Mail (A)'' to ''Standard Mail.''']

* * * * *

*M045 Palletized Mailings*

1.0 BASIC USES

[Amend 1.0f by replacing ''Standard Mail (A) and (B)'' with ''Standard Mail and Package Services'' and 1.0i by replacing ''Standard Mail'' with ''Package Services'' and by replacing ''M630'' with ''M700''; no other changes to text.]

[Amend the heading of 2.0 to add ''ON PALLETS'' to read as follows:]

2.0 PACKAGES ON PALLETS

[Revise 2.1 to read as follows:]

**2.1 Applicability**

Only packages of flats and packages of irregular parcels of Periodicals, Standard Mail, and Bound Printed Matter may be prepared in packages placed directly on pallets under the provisions of 2.2 through 2.5 and 3.0. Mail that cannot be placed on pallets under 2.0 and 3.0 must be prepared in sacks under the applicable provisions of M200, M600, and M700. Sacks containing packages for mixed ADC destinations, or containing packages remaining after all pallets are prepared, may be presented with the palletized portion of the mailing job (and, subject to 8.5, reported on the same postage statement) if the sacks are set apart from the palletized portion of the mailing job.

[Redesignate current 2.2 through 2.4 as 2.3 through 2.5, respectively. Delete current 2.5 and 2.6. Insert new 2.2 to read as follows:]

**2.2 Basic Packaging Standards**

Package preparation for Periodicals, Standard Mail, and Bound Printed Matter must meet the general standards in M010 and M020 and the applicable packaging provisions of M200, M610, M620, M720, and M820, except as noted in 2.3 through 2.5. Packages must be sorted to pallets under 3.0. The palletized portion of a mailing may not include packages sorted to mixed ADCs or foreign destinations.

[Amend the heading of redesignated 2.3 by deleting ''Size''; to read as follows:]

**2.3 Periodicals**

* * * * *

[Amend the heading of redesignated 2.4 by deleting ''Size'' and replacing ''Standard Mail (A)'' with ''Standard Mail'' to read as follows:]

**2.4 Standard Mail**

* * * * *

[Revise the heading and contents of redesignated 2.5 to read as follows:]

**2.5 Bound Printed Matter**

Bound Printed Matter on pallets must be packaged as follows:

a. Presorted Bound Printed Matter:

(1) Only individual pieces of flats or irregular parcels that weigh less than 10 pounds may be prepared as packages on pallets. Pieces that individually weigh 10 or more pounds must be prepared and palletized as machinable parcels under 3.5 or prepared in sacks under M722.

(2) Packages must be prepared to the package destinations in M722. The minimum package size is 10 addressed pieces or 10 pounds, whichever occurs first, except that the last package to a presort destination may contain fewer than 10 pieces or weigh less than 10 pounds. See 2.5c for a definition of the ''whichever comes first'' packaging requirement. When there are at least 10 pieces but fewer than 10 pounds for a presort destination, the pieces must be prepared in a single physical package. The maximum physical package size is 20 pounds, except that 5-digit packages that will be placed on a 5-digit scheme (flats only) or 5-digit pallet may weigh up to 40 pounds. The total number of physical packages for a single presort destination must not exceed the number of 10-pound increments to that destination. Each physical package must contain at least 2 addressed pieces. Each physical package must be labeled using optional endorsement lines or pressure sensitive labels under M722.

b. Carrier Route Bound Printed Matter:

(1) Only individual pieces of flats or irregular parcels that weigh less than 10 pounds may be prepared as packages on pallets. Pieces that individually weigh 10 or more pounds must either be prepared and palletized as machinable parcels under 3.5 and pay the Presorted rates, or be prepared in sacks to qualify for the Carrier Route rates under M723.

(2) The minimum package size is 10 addressed pieces or 10 pounds to a carrier route, whichever occurs first, except that the last package to a carrier route destination may contain fewer than 10 pieces or weigh less than 10 pounds. See 2.5c for a definition of the ''whichever comes first'' packaging requirement. When there are at least 10 pieces but fewer than 10 pounds for a presort destination, the pieces must be prepared in a single physical package. The maximum physical package size is 20 pounds, except that carrier route packages of flats that will be placed on a 5-digit scheme carrier routes or 5-digit carrier routes pallet and carrier route packages of irregular parcels that will be placed on a 5-digit pallet may weigh up to 40 pounds. The total number of physical packages for a single carrier route destination must not exceed the number of 10-pound increments to that destination. Each physical package must contain at least 2 addressed pieces. Each physical package must be labeled to the carrier route with facing slips under M723, optional endorsement lines under M013, or carrier route information lines under M014.

c. Minimum Package Size. Package mail under the minimum package size of ''10 pieces or 10 pounds, whichever comes first'' according to these standards:

(1) For identical-weight pieces, a single-piece weight of one pound results in 10 pieces weighing 10 pounds. Identical-weight pieces weighing one pound or less must be prepared using the 10-piece minimum; those that weigh more must be prepared using the 10 pound minimum.

(2) For nonidentical-weight pieces, mailers must either use the minimum that applies to the average piece weight for the entire mailing (divide the net weight of the mailing by the number of pieces; the resulting average single-piece weight determines whether the 10-piece or 10-pound minimum applies). Alternatively, package by the actual piece count or mail weight for each package destination, provided documentation can be provided with the mailing that shows (specifically for each package) the number of pieces and their total weight.

(3) Mailers must note on the accompanying postage statement whether they applied the 10-piece or 10-pound threshold, or both.

[Remove 3.0; redesignate 4.0 through 15.0 as 3.0 through 14.0, respectively.]

3.0 PALLET PRESORT AND LABELING

[The following section, Pallet Presort and Labeling, was originally revised as M045.4.0 in the final rule published in 65 FR 50054 (August 16, 2000). The revisions below are revisions to the language in that final rule.]

* * * * *

[Delete redesignated 3.3 pertaining to Bound Printed Matter (revised in the final rule published in 65 FR 50054 (August 16, 2000)). Redesignate 3.4 and 3.5 as 3.5 through 3.6. Add new 3.3 and 3.4 to read as follows:]

**3.3 Bound Printed Matter Flats—Packages and Sacks on Pallets**

Mailers must prepare pallets in the sequence listed below. Mailers who do not perform scheme sortation under 3.3a and 3.3b using L001 must begin preparing pallets under 3.3c. Pallets must be labeled according to the Line 1 and Line 2 information listed below and under M031.

a. 5-Digit Scheme Carrier Routes. Optional. Permitted only for flat-size packages on pallets. May contain only Carrier Route rate packages for the same 5-digit scheme under L001. If scheme sort is performed, it must be done for all 5-digit scheme destinations. For all 5-digit destinations that are not part of a scheme, prepare 5-digit carrier routes pallets under 3.3c.

(1) Line 1: use L001, Column B.

(2) Line 2: ''PSVC FLTS,'' followed by ''CARRIER ROUTES'' or ''CR–RTS'' and ''SCHEME'' or ''SCH.''

b. 5-Digit Scheme. Optional. Permitted only for flat-size packages on pallets. May contain only Presorted rate packages for the same 5-digit scheme under L001. If scheme sort is performed, it must be done for all 5-digit scheme destinations. For all 5-digit destinations that are not part of a scheme, prepare 5-digit pallets under 3.3d.

(1) Line 1: use L001, Column B.

(2) Line 2: ''PSVC FLTS 5D'' followed by ''SCHEME'' or ''SCH.''

c. 5-Digit Carrier Routes. Required for sacks and packages (except for packages prepared to 5-digit carrier route scheme pallets under 3.3a). May contain only Carrier Route rate mail for the same 5-digit ZIP Code.

(1) Line 1: use city, state abbreviation, and 5-digit ZIP Code destination (see M031 for military mail).

(2) Line 2: ''PSVC FLTS'' followed by ''CARRIER ROUTES'' or ''CR–RTS.''

d. 5-Digit. Required for sacks and packages (except for packages prepared to 5-digit scheme pallets under 3.3b). May contain only Presorted rate mail for the same 5-digit ZIP Code.

(1) Line 1: use city, state abbreviation, and 5-digit ZIP Code destination (see M031 for military mail).

(2) Line 2: ''PSVC FLTS 5D.''

e. 3-digit: Optional. May contain Carrier Route and/or Presorted rate mail.

(1) Line 1: use L002, Column A.

(2) Line 2: ''PSVC FLTS 3D.''

f. SCF. Required. May contain Carrier Route and/or Presorted rate mail.

(1) Line 1: use L002, Column C.

(2) Line 2: ''PSVC FLTS SCF.''

g. ASF. Required. May contain Carrier Route and/or Presorted rate mail. Sort ADC packages or sacks to ASF pallets based on the ''label to'' ZIP Code for the ADC destination of the package or sack in L004. See E752 for additional requirements for DBMC rate eligibility.

(1) Line 1: use L602.

(2) Line 2: ''PSVC FLTS ASF.''

h. BMC. Required. May contain Carrier Route and/or Presorted rate mail. Sort ADC packages or sacks to BMC pallets based on the label to ZIP Code for the ADC destination of the package or sack in L004. See E752 for additional requirements for DBMC rate eligibility.

(1) Line 1: use L601.

(2) Line 2: ''PSVC FLTS BMC.''

i. Mixed BMC (for sacks on pallets only). Optional. May contain Carrier Route and/or Presorted rate mail.

(1) Line 1: ''MXD,'' followed by the information in L601, Column B, for the BMC serving the 3-digit ZIP Code prefix of the entry post office (label to plant serving entry post office if authorized by the processing and distribution manager).

(2) Line 2: ''PSVC FLTS'' followed by ''WKG.''

**3.4 Bound Printed Matter Irregular Parcels—Packages and Sacks on Pallets**

Mailers must prepare pallets in the sequence listed below. Pallets must be labeled according to the Line 1 and Line 2 information listed below and under M031.

a. 5-digit. Required. May contain Carrier Route and/or Presorted rate mail.

(1) Line 1: use city, state abbreviation, and 5-digit ZIP Code destination (see M031 for military mail).

(2) Line 2: ''PSVC IRREG 5D'' and, if the pallet contains only carrier route mail, followed by ''CARRIER ROUTES'' or ''CR-RTS''.

b. 3-digit. Optional. May contain Carrier Route and/or Presorted rate mail.

(1) Line 1: use L002, Column A.

(2) Line 2: ''PSVC IRREG 3D.''

c. SCF. Required. May contain Carrier Route and/or Presorted rate mail.

(1) Line 1: use L002, Column C.

(2) Line 2: ''PSVC IRREG SCF.''

d. ASF. Required. May contain Carrier Route rate and/or Presorted rate mail. Sort ADC packages or sacks to ASF pallets based on the ''label to'' ZIP Code for the ADC destination of the package or sack in L004.

(1) Line 1: use L602.

(2) Line 2: ''PSVC IRREG ASF.''

e. BMC. Required. May contain Carrier Route and/or Presorted rate mail. Sort ADC packages or sacks to BMC pallets based on the ''label to'' ZIP Code for the ADC destination of the package or sack in L004.

(1) Line 1: use L601.

(2) Line 2: ''PSVC IRREG BMC.''

f. Mixed BMC (for sacks on pallets only). Optional. May contain Carrier Route and/or Presorted rate mail.

(1) Line 1: ''MXD,'' followed by the information in L601, Column B, for the BMC serving the 3-digit ZIP Code prefix of the entry post office (label to plant serving entry post office if authorized by the processing and distribution manager).

(2) Line 2: ''PSVC IRREG'' followed by ''WKG.''

**3.5 Machinable Parcels—Standard Mail, Bound Printed Matter, and Parcel Post (Except BMC Presort, OBMC Presort, and Parcel Select DDU and DSCF)**

Mailers must prepare pallets in the sequence listed below. Mailers may prepare Parcel Post other than BMC Presort, OBMC Presort, and Parcel Select DDU and DSCF on pallets under this section as an option. If Parcel Post is optionally sorted under this section, it must meet all the requirements of this section. Pallets must be labeled according to the Line 1 and Line 2 information listed below and under M031.

a. 5-digit. Required, except optional for Standard Mail if 3/5 rates are not claimed.

(1) Line 1: use city, state abbreviation, and 5-digit ZIP Code destination (see M031 for military mail).

(2) Line 2: ''STD MACH 5D'' or ''PSVC MACH 5D,'' as applicable.

b. If DBMC rates are not claimed: BMC. Required.

(1) Line 1: use L601.

(2) Line 2: ''STD MACH BMC'' or ''PSVC MACH BMC,'' as applicable.

c. If DBMC rates are claimed: ASF/BMC. Option 1: Mailers may opt to sort mail to ASFs using L602 only when the mail on the ASF pallet will be deposited at the ASF to claim the DBMC rate. After ASF pallets are prepared (mail need not be sorted to all ASFs), remaining mail must be sorted to BMCs using L601. Mail on BMC pallets deposited at the applicable BMC facility will be eligible for DBMC rates only if its 3-digit ZIP Code prefix is listed in Exhibit E650.5.1 (Standard Mail) or Exhibit E751.1.3 (Parcel Post and Bound Printed Matter) for that entry BMC. Option 2: Mailers may sort mail only to BMCs using L601. Under option 2, only mail for 3-digit ZIP Codes served by a BMC listed in Exhibit E650.5.1 or Exhibit E751.1.3 are eligible for DBMC rates (i.e., mail for 3-digit ZIP Codes served by an ASF in Exhibit E650.5.1 or Exhibit E751.1.3 are not eligible for DBMC rates, nor are 3-digit ZIP Codes that do not appear on Exhibit E650.5.1 or Exhibit E751.1.3).

(1) Line 1: Option 1: use L602 for ASF pallets; use L601 for BMC pallets.

Option 2: use L601.

(2) Line 2: ''STD MACH'' or ''PSVC MACH,'' as applicable; followed by ''ASF'' or ''BMC,'' as applicable.

d. Mixed BMC. Optional.

(1) Line 1: ''MXD,'' followed by the information in L601, Column B, for the BMC serving the 3-digit ZIP Code prefix of the entry post office (label to plant serving entry post office if authorized by the processing and distribution manager).

(2) Line 2: ''STD MACH'' or ''PSVC MACH,'' as applicable, followed by ''WKG.''

[Amend the title of 3.6 to read as follows:]

**3.6 Presorted Media Mail and Library Mail**

[Amend 3.6a(2) by changing ''STD'' and ''STD B'' to ''PSVC.''']

[Amend 3.6b by changing ''Destination BMC'' to ''BMC'' and by changing ''STD'' and ''STD B'' to ''PSVC.]

[Amend the heading of redesignated 4.0 by adding ''To Protect SCF Pallet'' and by replacing ''Standard Mail (A)'' with ''Standard Mail'' to read as follows:]

4.0 PACKAGE REALLOCATION TO PROTECT SCF PALLET FOR PERIODICALS FLATS AND IRREGULAR PARCELS AND STANDARD MAIL FLATS ON PALLETS

* * * * *

[The following section (M045.5.0) was originally added as M045.6.0 in the amended final rule published in 65 FR 48385 (August 8, 2000). The revisions below are revisions to the language in that final rule.]

[Amend the heading of redesignated 5.0 by replacing ''Standard Mail (A)'' with ''Standard Mail'' to read as follows:]

5.0 PACKAGE REALLOCATION TO PROTECT BMC PALLET FOR STANDARD MAIL FLATS ON PALLETS

* * * * *

6.0 PALLETS OF PACKAGES, SACKS, AND TRAYS

* * * * *

[Amend the heading of 6.2 to read as follows:]

**6.2 Standard Mail**

[Amend 6.2 by replacing the class name ''Standard Mail (A)'' with ''Standard Mail''; no other changes to text.]

* * * * *

**6.4 Commingled Zones**

[Amend 6.4 by replacing ''Standard Mail (B)'' with ''Package Services mail,'' and by changing ''M630'' to ''M710 or M720'' to read as follows:]

Pieces of Package Services mail for different zones may be commingled only under M710 or M720.

* * * * *

[Amend the heading of 8.0 by replacing ''Standard Mail (A)'' with ''Standard Mail'' to read as follows:]

8.0 PALLETS OF COPALLETIZED PERIODICALS OR STANDARD MAIL FLAT-SIZE PIECES

* * * * *

[Amend the heading of 8.3 by replacing ''Standard Mail (A)'' with ''Standard Mail'' to read as follows:]

**8.3 Standard Mail**

[Amend the first sentence of 8.3 to read as follows:]

Additional standards apply to Standard Mail: * * *

* * * * *

**8.5 Postage Statement**

[Amend 8.5b by replacing ''Standard Mail (A)'' with ''Standard Mail''; no other changes to text.]

* * * * *

9.0 PALLETS OF MACHINABLE PARCELS

[Amend the heading of 9.1 to remove the ''(A)'' to read as follows:]

**9.1 Standard Mail**

* * * * *

[Revise the heading of 9.2 to read as follows:]

**9.2 Package Services**

[Amend 9.2 by changing ''M630'' to ''M710 and M720.'']

* * * * *

10.0 PARCEL POST—BULK MAIL CENTER (BMC) PRESORT DISCOUNT

**10.1 Machinable Parcels**

[Amend 10.1c by replacing the label class designation ''STD B'' with ''PSVC'' to read as follows:]

To qualify for the BMC Presort discount:

* * * * *

c. Pallet box Line 2 labeling: ''PSVC MACH BMC.''

**10.2 Nonmachinable Parcels**

[Amend 10.2c by replacing the label class designation ''STD B'' with ''PSVC'' to read as follows:]

* * * * *

c. Pallet Line 2 labeling: ''PSVC NON MACH BMC'' or ''PSVC NON MACH ASF,'' as applicable.

11.0 PARCEL POST—ORIGIN BULK MAIL CENTER (OBMC) PRESORT DISCOUNT

**11.1 Machinable Parcels**

[Amend 11.1c by replacing the label class designation ''STD B'' with ''PSVC'' to read as follows:]

To qualify for the OBMC Presort discount:

* * * * *

c. Pallet box Line 2 labeling: ''PSVC MACH BMC.''

**11.2 Nonmachinable Parcels**

[Amend 11.2c by replacing the label class designation ''STD B'' with ''PSVC'' to read as follows:]

To qualify for the OBMC Presort discount:

* * * * *

c. Pallet Line 2 labeling: ''PSVC NON MACH BMC'' or ''PSVC NON MACH ASF,'' as appropriate.

12.0 PARCEL POST DSCF RATES—PARCELS ON PALLETS

**12.1 Basic Preparation, Parcels on Pallets**

[Amend the first sentence of 12.1 by changing ''M630'' to ''M710.'']

* * * * *

[Amend 12.1d(2) by replacing the label class designation ''STD B'' with ''PSVC'' and adding ''PARCELS'' to read as follows:]

* * * * *

(2) For Line 2, use: ''PSVC PARCELS 5D.''

* * * * *

[Amend 12.1e by replacing ''M630'' with ''M710.'']

**12.2 Alternate Preparation, Parcels on Pallets**

[Amend 12.2a by replacing ''M630'' with ''M710.'']

* * * * *

[Amend 12.2c by replacing ''M630'' with ''M710.'']

[Amend 12.2d(2) by replacing the label class designation ''STD B'' with ''PSVC'' and adding ''PARCELS'' to read as follows:]

* * * * *

(2) For Line 2, use: ''PSVC PARCELS 5D.''

* * * * *

**12.3 5-Digit ZIP Codes For Which Pallets May Not Be Prepared**

[Amend 12.3 by changing ''Exhibits E652.7.0 and E652.8.0'' to ''Exhibits E751.7.0 and E751.8.0'' and by changing ''M630'' to ''M710.'']

**12.4 5-Digit ZIP Codes Requiring BMC Entry**

[Amend 12.4 by changing ''E652.6.0'' to ''E751.6.0.'']

13.0 PARCEL POST DSCF RATES—SACKS ON PALLETS

[Amend 13.0 by changing ''M630'' to ''M710.'']

[Amend 13.0b by replacing the label class designation ''STD B'' with ''PSVC'' to read as follows:]

* * * * *

b. Line 2: ''PSVC PP 5D SACKS''.

14.0 PARCEL POST DDU RATES

[Amend 14.0 by replacing ''STD B'' with ''PSVC'' and adding ''PARCELS'' in the fourth sentence to read as follows:]

* * * If pieces are sacked or palletized, they must be prepared to 5-digits and labeled as follows: Line 1 labeling, use city, state, and 5-digit ZIP Code destination; Line 2, use ''PSVC PARCELS 5D.'' * * *

* * * * *

*M050 Delivery Sequence*

* * * * *

4.0 DOCUMENTATION

**4.1 General**

[Amend 4.1 by changing the class name ''Standard Mail (A)'' to ''Standard Mail'' in the fifth sentence; no other changes to text.]

**4.2 High Density**

[Amend 4.2a by replacing ''Standard Mail (A)'' with ''Standard Mail''; no other changes to text.]

* * * * *

*M070 Mixed Classes*

*M071 Basic Information*

1.0 MARKINGS

[Amend 1.1 and 1. 2 by replacing ''Standard Mail (A)'' with ''Standard Mail''; no other changes to text.]

* * * * *

[Amend 1.3 by replacing ''Standard Mail (A) Enclosed'' with ''Standard Mail Enclosed'' and ''Standard Mail parcel'' with ''Standard Mail and Package Services parcel''; no other changes to text.]

*M072 Express Mail and Priority Mail Drop Shipment*

* * * * *

2.0 ADDITIONAL STANDARDS FOR ENCLOSED MAIL

* * * * *

[Revise the heading and contents of 2.3 by changing ''Standard Mail (A)'' to ''Standard Mail.''']

[Revise the heading of 2.4 to ''Package Services'' to read as follows:]

**2.4 Package Services**

[Amend 2.4 by changing ''P710, P720, or P730'' to ''P910, P920, or P930'' and by changing ''E652'' to ''E751.''']

* * * * *

[Amend the heading of M073 to reflect the new class of mail names to read as follows:]

*M073 Combined Mailings of Standard Mail and Package Services Parcels*

1.0 COMBINED MACHINABLE PARCELS—RATES OTHER THAN PARCEL POST OBMC PRESORT, BMC PRESORT, DSCF, AND DDU

[Amend 1.1 by replacing ''Standard Mail (A)'' with ''Standard Mail'' and by replacing ''Standard Mail (B)'' with ''Package Services''; no other changes to text.]

[Amend 1.2 by replacing ''Standard Mail (A)'' with ''Standard Mail,'' by replacing ''Standard Mail (B)'' with ''Package Services mail,'' and by replacing ''Standard Mail'' with ''Standard Mail and Package Services''; no other changes to text.]

[Amend 1.4 and 1.5c by replacing ''Standard Mail (A)'' with ''Standard Mail'' and by replacing ''Standard Mail (B)'' with ''Package Services''; no other changes to text.]

[Amend 1.6a by replacing ''Standard Mail (A)'' with ''Standard Mail,'' by changing ''10 pieces/20 pounds/1,000 cubic inches'' to ''10 pieces or 20 pounds,'' and by changing ''Exhibits E651.5.1 and E652.1.3'' to ''Exhibits E650.5.1 and E751.1.3.''']

Amend 1.6b by replacing ''STD A/B'' with ''STD/PSVC''; no other changes to text.]

2.0 COMBINED PARCELS—PARCEL POST OBMC PRESORT, BMC PRESORT, AND DSCF RATES

**2.1 Qualification**

[Amend 2.1a, b, and c by replacing ''Standard Mail (A)'' with ''Standard Mail'' and by replacing ''Standard Mail (B)'' with ''Package Services''; no other changes to text.]

**2.2 Authorization**

[Amend 2.2 by replacing ''Standard Mail (A)'' with ''Standard Mail'' and by replacing ''Standard Mail (B)'' with ''Package Services''; no other changes to text.]

**2.3 Postage Payment**

[Amend 2.3 by replacing ''P710'' with ''P910.''']

**2.4 Preparation and Rates**

[Amend 2.4 by replacing ''Standard Mail (A)'' with ''Standard Mail'' and by replacing ''Standard Mail (B)'' with ''Package Services''; no other changes to text.]

**2.5 Documentation**

[Amend 2.5 by replacing ''Standard Mail (A)'' with ''Standard Mail'' and by replacing ''Standard Mail (B)'' with ''Package Services''; no other changes to text.]

* * * * *

*M074 Plant Load Mailings*

* * * * *

3.0 INTERSERVICE AREA PLANT-LOADED SHIPMENTS

* * * * *

[Revise heading of 3.4 to reflect the new mail class names to read as follows:]

**3.4 Standard Mail and Package Services**

[Amend 3.4 by replacing ''Standard Mail'' with ''Standard Mail and Package Services''; no other changes to text.]

* * * * *

[Amend 3.7c by replacing ''Standard Mail'' with ''Standard Mail and Package Services''; no other changes to text.]

* * * * *

**M100 First-Class Mail (Nonautomation)**

[Add new headings M110 and 1.0 to read as follows:]

*M110 Single-Piece First-Class Mail*

1.0 PREPARATION

[Redesignate E130.2.3 as M110.1.0; no changes to text.]

* * * * *

*M600 Standard Mail*

[Amend the heading of M610 by removing ''(A)'' to read as follows:]

*M610 Presorted Standard Mail*

1.0 BASIC STANDARDS

* * * * *

[Amend the heading and contents of 1.3 by replacing ''Standard Mail (A)'' with ''Standard Mail''; no other changes to text.]

* * * * *

4.0 FLAT-SIZE PIECES AND IRREGULAR PARCELS

* * * * *

[Amend 4.6 by replacing ''Standard Mail (A)'' with ''Standard Mail''; no other changes to text.]

* * * * *

[Amend 4.8 by replacing ''STD A IRREG'' with ''STD IRREG'' and by replacing ''STD A MACH'' with ''STD MACH,'' no other changes to text.]

5.0 MACHINABLE PARCELS

* * * * *

[Amend 5.3 by replacing ''STD A MACH'' with ''STD MACH,'' no other changes to text.]

[Delete 6.0 pertaining to preparation of bedloaded bundles of flats.]

*M620 Enhanced Carrier Route Standard Mail*

1.0 BASIC STANDARDS

**1.1 All Mailings**

[Amend 1.1a by replacing ''E620'' with ''E630.''']

* * * * *

[Revise the heading of 1.4 to read as follows:]

**1.4 Exception**

[Amend 1.4 by replacing ''Standard Mail (A)'' with ''Standard Mail.''']

* * * * *

4.0 SACK PREPARATION—FLAT-SIZE PIECES AND IRREGULAR PARCELS

* * * * *

[Amend 4.3 by replacing ''STD A IRREG'' with ''STD IRREG,'' no other changes to text.]

5.0 RESIDUAL PIECES

[Amend 5.0 by replacing ''Standard Mail (A)'' with ''Standard Mail''; no other changes to text.]

[Delete 6.0 pertaining to preparation of bedloaded bundles of flats.]

[Add new section M700 to read as follows:]

**M700 Package Services**

[Redesignate M630.1.0 as M710 to read as follows:]

*M710 Parcel Post*

[Add new heading 1.0 to read as follows:]

1.0 BASIC REQUIREMENTS

[Add 1.1 to read as follows:]

**1.1 General**

All mailings at Parcel Post rates are subject to these general standards:

a. Each mailing must meet the applicable standards in E710, E711, E751, and M010 and M030.

b. All pieces that are palletized must be prepared under M045.

c. There are no presort, sacking, or labeling standards for single-piece rate Parcel Post.

[Redesignate M630.1.1 as M710.1.2, no changes to text.]

[Redesignate M630.1.2 as M710.1.3, amend to show DSCF and DDU rate mail need not be separated by zone, and amend for numbering revisions to read as follows:]

**1.3 Separation**

Except for mail entered at DSCF or DDU rates (which are not zoned rates), Parcel Post pieces must be separated by zones when presented for acceptance unless either the correct postage is affixed to each piece or the mailing is prepared under 1.4, or the mailing is presented under a special postage payment system under P910, P920, or P930. If DSCF sacks prepared under 2.2 are included in the same mailing as DSCF pallets prepared under M045.12.1e, then at the time of acceptance the mailer must separate the sacks that are overflow from palletized mail from those sacks that were prepared under the provisions of 2.2.

[Redesignate M630.8.0 as M710.1.4; amend to delete references to Bound Printed Matter to read as follows:]

**1.4 Commingled Zones**

Zoned Parcel Post pieces need not be separated by zones when presented for verification, other than as individual pieces or with full correct postage affixed to each piece, subject to this section. Nonidentical-weight pieces not bearing the full correct postage may not be commingled unless authorized by the RCSC manager serving the office of mailing. The mail must be prepared and documented under either of the following:

a. P910 or P930; or

b. All of these conditions:

(1) A unique number is assigned to each sack/pallet in the mailing and printed on a separate line at the top of the sack/pallet label (above the Line 1 information).

(2) A detailed list accompanies each mailing or mailing segment, sequenced numerically by the numbers assigned to sacks/pallets in the mailing, that shows the post office where the mail is to be entered (entry post office), a unique identifier for the mailing or mailing segment that also appears on the corresponding postage statement(s), the name and address of the mailer, the permit number (if applicable), the date of mailing, individual line entries for each sack/pallet, and the total number of pieces to each zone and in the entire mailing or mailing segment. Line entries for sacks/pallets containing mail for only one zone must show the sack/pallet number, the sortation level, the zone for which the mail is destined, and the total number of pieces for the sack/pallet. Entries for sacks/pallets containing mail for more than one zone must also show (by zone) the number of pieces to each 3-digit ZIP Code area and the total number of pieces for that zone for the sack/pallet. Mailings are not accepted if there are discrepancies between the information in the detailed listing or on the postage statement and the results of USPS random verification of piece counts and postage.

* * * * *

[Redesignate M630.1.3 as M710.1.5, and amend by changing references from ''P710, P720, or P730'' to ''P910, P920, or P930,'' and clarifying to read as follows:]

**1.5 Documentation**

Parcel Post mailings must be documented as follows:

a. Postage Statement. A complete, signed postage statement, using the correct USPS form or an approved facsimile, must accompany each bulk mailing (a mailing that includes pieces qualifying for rates that require a 50-piece minimum volume requirement).

b. Other Documentation. When presented for acceptance, documentation of postage by entry office and presort level (*e.g.,* by BMC for DBMC, OBMC Presort, and BMC Presort mail and by 5-digit ZIP Code for DSCF and DDU rates) is required under P910, P920, or P930. Except for DSCF rate mail palletized under the alternate preparation option that requires separate documentation, other documentation is not required when the correct rate is affixed to each piece, or when each piece is of identical weight and the pieces are separated by zone and within each zone are grouped by pieces subject to the same combination of rates. DSCF rate mail palletized under the alternate preparation option in M045 must submit the detailed documentation required in M045.12.2.

[Add 2.0 to read as follows:]

2.0 DSCF RATE

**2.1 General**

[Redesignate contents of M630.1.4 as M710.2.1; amend by changing the reference ''1.5'' to ''2.2,'' by changing the reference ''Exhibit E652.6.0'' to ''Exhibit E751.6.0,'' and by changing the reference to ''Exhibit E652.7.0 and Exhibit E652.8.0'' to ''Exhibit E751.7.0 and Exhibit E751.8.0''; no other changes to text.]

**2.2 DSCF Sack Preparation**

[Redesignate M630.1.5 as M710.2.2; amend redesignated 2.2d by replacing ''STD B 5D'' with ''PSVC PARCELS 5D''; no other changes to text.]

3.0 DDU RATE

[Redesignate M630.1.6 as M710.3.0; amend redesignated 3.0b by changing ''E652'' to ''E751''; amend redesignated 3.0d by changing ''Exhibit E652.7.0 and Exhibit E652.8.0'' to ''Exhibit E751.7.0 and Exhibit E751.8.0''; amend redesignated 3.0e(2) by changing ''STD B 5D'' with ''PSVC PARCELS 5D,'' no other changes to text.]

[Add 4.0 to read as follows:]

4.0 OPTIONAL MACHINABLE PARCEL PREPARATION

**4.1 Basic Standards**

Mailers may opt to prepare Parcel Post machinable parcels in sacks under 4.2 or on pallets under M045. Pieces must be separated by zones when presented to the USPS unless either the correct postage is affixed to each piece or the mailing is prepared under 1.4. Pieces for more than one zone may not be placed in the same sack, and sacks must be separated by zone when presented to the USPS.

**4.2 Sack Preparation**

Sack size, preparation sequence, and Line 1 labeling:

a. 5-digit: required (minimum of 10 pieces/20 pounds, smaller volume not permitted); for Line 1, use 5-digit ZIP Code destination of pieces (see M031 for military mail).

b. Destination ASF: optional; allowed only for mail deposited at an ASF to claim the DBMC rate (minimum of 10 pieces/20 pounds, smaller volume not permitted); for Line 1, use L602. Exhibit E751.1.3d determines DBMC rate eligibility.

c. Destination BMC: required (minimum of 10 pieces/20 pounds, smaller volume not permitted); for Line 1, use L601. Exhibit E751.1.3d determines DBMC rate eligibility.

d. Mixed BMC: required (no minimum); for Line 1, use ''MXD'' followed by the Column B information in L601 for the BMC serving the 3-digit ZIP Code prefix of the entry post office.

**4.3 Sack Line 2**

Line 2:

a. 5-digit: ''PSVC MACH 5D.''

b. ASF: ''PSVC MACH ASF.''

c. Destination BMC: ''PSVC MACH BMC.''

d. Mixed BMC: ''PSVC MACH WKG.''

* * * * *

[Add new M720 to read as follows:]

*M720 Bound Printed Matter*

*M721 Single Piece Rates*

1.0 BASIC STANDARDS

**1.1 General**

There are no presort, sacking, or labeling standards for single-piece rate Bound Printed Matter (BPM).

**1.2 Markings**

Each piece mailed at single-piece BPM rates must be marked ''Bound Printed Matter'' (or ''BPM'') subject to M012.

*M722 Presorted Bound Printed Matter*

1.0 BASIC STANDARDS

**1.1 General**

All mailings of Presorted Bound Printed Matter (BPM) are subject to the standards in 2.0 through 4.0 and to these general standards:

a. Each mailing must meet the applicable standards in E710, E712, E752, and in M010, M020, and M030.

b. All pieces in a mailing must be within the same processing category as described in C050. A BPM irregular parcel is a piece that is not a machinable parcel as defined in C050.4.1 or a flat as defined in C050.3.1. Irregular parcels also are pieces that meet the size and weight standards for a machinable parcel but are not individually boxed or packaged to withstand processing on BMC parcel sorters under C010.

c. All pieces must be sorted to the finest extent possible under 2.0 through 4.0 or palletized under M045.

d. Subject to M012, pieces must be marked ''Bound Printed Matter'' (or ''BPM'') and ''Presorted'' (or ''PRSRT'').

**1.2 Documentation**

A complete, signed postage statement, using the correct USPS form or an approved facsimile, must accompany each mailing. Documentation of postage is not required if the correct rate is affixed to each piece or if each piece is of identical weight and the pieces are separated by rate (zone) when presented for acceptance.

**1.3 Separation**

Pieces for each zone must be sacked separately. When presented for verification, sacks must be separated by zone. Exception: Pieces for different zones may be sacked together and the sacks do not have to be separated by zone for verification if any of the following apply:

a. Full (exact) postage is affixed to each piece in the mailing.

b. The mailing is prepared under P910, P930, or 1.4.

**1.4 Commingling Zones**

Zone rated BPM need not be separated by zones when presented other than as individual pieces or with full correct postage affixed to each piece, subject to this section. Nonidentical-weight pieces not bearing the full correct postage may not be commingled unless authorized by the RCSC manager serving the office of mailing. The mail must be prepared and documented:

a. Under P910 or P930; or

b. Under all these conditions:

(1) A unique number is assigned to each pallet in the mailing and printed on a separate line at the top of the pallet label (above the Line 1 information).

(2) A detailed list accompanies each mailing or mailing segment, sequenced numerically by the numbers assigned to the pallets in the mailing, that shows the post office where the mail is to be entered (entry post office), a unique identifier for the mailing or mailing segment that also appears on the corresponding postage statement, the name and address of the mailer, the permit number, the date of mailing, individual line entries for each pallet, and the total number of pieces to each zone in the entire mailing or mailing segment. Line entries for pallets containing mail for only one zone must show the pallet number, the sortation level, the zone for which the mail is destined, and the total number of pieces for the pallet. Entries for pallets containing mail for more than one zone must also show (by zone) the number of pieces to each 3-digit ZIP Code area and the total number of pieces for that zone for the pallet. Mailings are not accepted if there are discrepancies between the information in the detailed listing or on the postage statement and the results of USPS random verification of piece counts and postage.

2.0 REQUIRED PREPARATION—FLATS

**2.1 Required Packaging**

A package must be prepared when the quantity of addressed pieces for a required presort level reaches a minimum of 10 pieces or 10 pounds, whichever occurs first. Smaller volumes are not permitted except for mixed ADC packages. The maximum weight of each physical package is 20 pounds, except that 5-digit packages placed in 5-digit sacks may weigh a maximum of 40 pounds each. Each physical package must contain at least 2 addressed pieces (except mixed ADC packages). Packaging also is subject to these conditions:

a. Identical-weight pieces that weigh 1 pound or less must be prepared using the 10-piece minimum; those that weigh more than 1 pound must be prepared using the 10-pound minimum.

b. For nonidentical-weight pieces, mailers must use either the minimum that applies to the average piece weight for the entire mailing (divide the net weight of the mailing by the number of pieces; the resulting average single-piece weight determines whether the 10-piece or 10-pound minimum applies), or package by the actual piece count or mail weight for each package, if documentation can be provided with the mailing that shows the number of pieces and their total weight.

c. Mailers must note on the accompanying postage statement whether they applied the piece count, weight, or both.

**2.2 Package Preparation**

Packages must be prepared and labeled in the following required sequence:

a. 5-digit: required; red Label D or optional endorsement line (OEL).

b. 3-digit: required; green Label 3 or OEL.

c. ADC: required; pink Label A or OEL.

d. Mixed ADC: required (no minimum); tan Label MXD or OEL.

**2.3 Required Sacking**

A sack must be prepared when the quantity of mail for a required presort destination reaches either 20 addressed pieces or 20 pounds, whichever occurs first. Smaller are volumes not permitted (except mixed ADC sacks). Optional SCF sacks may only be prepared when there are at least 20 addressed pieces or 20 pounds, whichever occurs first. Smaller volumes are not permitted. Sacking also is subject to these conditions:

a. Identical-weight pieces that weigh 1 pound or less must be prepared using the 20-piece minimum; those that weigh more than 1 pound must be prepared using the 20-pound minimum.

b. For nonidentical-weight pieces, mailers must use either the minimum that applies to the average piece weight for the entire mailing (divide the net weight of the mailing by the number of pieces; the resulting average single-piece weight determines whether the 20-piece or 20-pound minimum applies), or sack by the actual piece count or mail weight for each sack, if documentation can be provided with the mailing that shows (specifically for each sack) the number of pieces and their total weight.

c. Mailers must note on the accompanying postage statement whether they applied the piece count or weight.

**2.4 Sack Preparation**

Required sequence and Line 1 sack labeling:

a. 5-digit: required; for Line 1, use 5-digit ZIP Code destination of packages (for military mail, the ZIP Code is preceded by the prefixes under M031).

b. 3-digit: required; for Line 1, use L002, Column A.

c. SCF: optional; for Line 1, use L005, Column B.

d. ADC: required; for Line 1, use L004, Column B.

e. Mixed ADC: required (no minimum); for Line 1, use ''MXD'' followed by the city/state/ZIP Code of the ADC serving the 3-digit ZIP Code of the entry post office, as shown in L004, Column B.

**2.5 Sack Label Line 2**

Line 2 information:

a. 5-digit: ''PSVC FLATS 5D NON BC.''

b. 3-digit: ''PSVC FLATS 3D NON BC.''

c. SCF: ''PSVC FLATS SCF NON BC.''

d. ADC: ''PSVC FLATS ADC NON BC.''

e. Mixed ADC: ''PSVC FLATS NON BC WKG.''

3.0 REQUIRED PREPARATION—IRREGULAR PARCELS WEIGHING LESS THAN 10 POUNDS

**3.1 Required Packaging**

Packaging is not required for pieces placed in 5-digit sacks when such pieces are enclosed in an envelope, full-length sleeve, full-length wrapper, or polybag, and the minimum package size is met. Otherwise, a package must be prepared when the quantity of addressed pieces for a required presort level reaches a minimum of 10 pieces or 10 pounds, whichever occurs first. Smaller volumes are not permitted (except mixed ADC packages). The maximum weight of each physical package is 20 pounds, except that 5-digit packages placed in 5-digit sacks or prepared for and entered at DDU rates may weigh a maximum of 40 pounds each. Each physical package must contain at least 2 addressed pieces (except mixed ADC packages). Packaging also is subject to these conditions:

a. Identical-weight pieces that weigh 1 pound or less must be prepared using the 10-piece minimum; those that weigh more than 1 pound must be prepared using the 10-pound minimum.

b. For nonidentical-weight pieces, mailers must either use the minimum that applies to the average piece weight for the entire mailing (divide the net weight of the mailing by the number of pieces; the resulting average single-piece weight determines whether the 10-piece or 10-pound minimum applies), or package by the actual piece count or mail weight for each sack, if documentation can be provided with the mailing that shows the number of pieces and their total weight.

c. Mailers must note on the accompanying postage statement whether they applied the piece count, weight, or both.

**3.2 Package Preparation**

Packages must be prepared and labeled in the following required sequence:

a. 5-digit: required; red Label D or optional endorsement line (OEL).

b. 3-digit: required; green Label 3 or OEL.

c. ADC: required; pink Label A or OEL.

d. Mixed ADC: required; (no minimum): tan Label MXD or OEL.

**3.3 Required Sacking**

A sack must be prepared when the quantity of mail for a required presort destination reaches either 10 addressed pieces or 20 pounds, whichever occurs first. Smaller volumes are not permitted (except mixed ADC sacks). Optional SCF sacks may only be prepared when there are at least 10 addressed pieces or 20 pounds, whichever occurs first. Smaller volumes are not permitted. Sacking also is subject to these conditions:

a. Identical-weight pieces weighing two pounds or less must be prepared using the 10-piece minimum, those that weigh more must be prepared using the 20-pound minimum.

b. For nonidentical-weight pieces, mailers must use either the minimum that applies to the average piece weight for the entire mailing (divide the net weight of the mailing by the number of pieces; the resulting average single-piece weight determines whether the 10-piece or 20-pound minimum applies). Alternatively, sack by the actual piece count or mail weight for each package destination, provided that documentation can be provided with the mailing that shows (specifically for each sack) the number of pieces and their total weight.

c. Mailers must note on the accompanying postage statement whether they applied the piece count or weight.

**3.4 Sack Preparation**

Required sequence and Line 1 labeling:

a. 5-digit: required; for Line 1, use 5-digit ZIP Code destination of packages (for military mail, the ZIP Code is preceded by the prefixes under M031).

b. 3-digit: required; for Line 1, use L002, Column A.

c. SCF: optional; for Line 1, use L005, Column B.

d. ADC: required; for Line 1, use L004, Column B.

e. Mixed ADC: required (no minimum); for Line 1, use ''MXD'' followed by the city/state/ZIP Code of the ADC serving the 3-digit ZIP Code of the entry post office, as shown in L004, Column B.

**3.5 Sack Label Line 2**

Line 2 information:

a. 5-digit: ''PSVC IRREG 5D.''

b. 3-digit: ''PSVC IRREG 3D.''

c. SCF: ''PSVC IRREG SCF.''

d. ADC: ''PSVC IRREG ADC.''

e. Mixed ADC: ''PSVC IRREG WKG.''

**3.6 Exception to Sacking**

Sacking is not required for 5-digit packages when prepared for and entered at DDU rates; such packages may be bedloaded and may weigh up to 40 pounds.

4.0 REQUIRED PREPARATION—IRREGULAR PARCELS WEIGHING 10 POUNDS OR MORE

**4.1 Piece Preparation**

Each piece must be enclosed in an envelope, full-length sleeve, full-length wrapper, or polybag. Packaging is not permitted for pieces weighing 10 pounds or more except under 4.5.

**4.2 Required Sacking**

A sack must be prepared when the quantity of mail for a required presort destination reaches 20 pounds. Smaller

volumes are not permitted (except mixed ADC sacks). Optional SCF sacks may be prepared only when there are at least 20 pounds. Smaller volumes are not permitted.

**4.3 Sack Preparation**

Required sequence and Line 1 labeling:

a. 5-digit: required; for Line 1, use 5-digit ZIP Code destination of packages (for military mail, the ZIP Code is preceded by the prefixes under M031).

b. 3-digit: required; for Line 1, use L002, Column A.

c. SCF: optional; for Line 1, use L005, Column B.

d. ADC: required; for Line 1, use L004, Column B.

e. Mixed ADC: required (no minimum); for Line 1, use ''MXD'' followed by the city/state/ZIP Code of the ADC serving the 3-digit ZIP Code of the entry post office, as shown in L004, Column B.

**4.4 Sack Label Line 2**

Line 2 information:

a. 5-digit: ''PSVC IRREG 5D.''

b. 3-digit: ''PSVC IRREG 3D.''

c. SCF: ''PSVC IRREG SCF.''

d. ADC: ''PSVC IRREG ADC.''

e. Mixed ADC: ''PSVC IRREG WKG.''

**4.5 Exception to Sacking**

Pieces may be prepared only in 5-digit packages when entered at DDU rates; such packages may be bedloaded and may weigh up to 40 pounds.

5.0 REQUIRED PREPARATION—MACHINABLE PARCELS

**5.1 Required Sacking DBMC Rates Not Claimed**

A sack must be prepared when the quantity of parcels for a required presort destination reaches either 10 addressed pieces or 20 pounds, whichever occurs first. Smaller volumes are not permitted (except origin (mixed) BMC sacks). Sacking also is subject to these conditions:

a. Identical-weight pieces that weigh two 2 pounds or less must be prepared using the 10-piece minimum; those that weigh more must be prepared using the 20-pound minimum.

b. For nonidentical-weight pieces, mailers must use either the minimum that applies to the average piece weight for the entire mailing (divide the net weight of the mailing by the number of pieces; the resulting average single-piece weight determines whether the 10-piece or 20-pound minimum applies) or sack by the actual piece count or mail weight for each package destination, provided that documentation can be provided with the mailing that shows (specifically for each sack) the number of pieces and their total weight.

c. Mailers must note on the accompanying postage statement whether they applied the piece count or weight.

**5.2 Sack Preparation DBMC Rates Not Claimed**

Required sequence and Line 1 labeling:

a. 5-digit: required; for Line 1, use 5-digit ZIP Code destination of parcels (for military mail, the ZIP Code is preceded by the prefixes under M031).

b. BMC: required; for Line 1, use L601, Column B.

c. Origin (mixed) BMC: required (no minimum); for Line 1, ''MXD'' followed by the information in L601, Column B, for the BMC serving the 3-digit ZIP Code of the entry post office.

**5.3 Sack Label Line 2 DBMC Rates Not Claimed**

Line 2 information:

a. 5-digit: ''PSVC MACH 5D.''

b. BMC: ''PSVC MACH BMC.''

c. Mixed BMC: ''PSVC MACH WKG.''

**5.4 Required Sacking for DBMC Rates**

A sack must be prepared when the quantity of parcels for a required presort destination reaches either 10 addressed pieces or 20 pounds, whichever occurs first. Smaller volumes are not permitted (except origin (mixed) BMC sacks). Optional ASF sacks, if prepared, also must meet the minimum sack volume requirement. See E752 for DBMC rate eligibility. Sacking also is subject to these conditions:

a. Identical-weight pieces that weigh two pounds or less must be prepared using the 10-piece minimum; those that weigh more must be prepared using the 20-pound minimum.

b. For nonidentical-weight pieces, mailers must either use the minimum that applies to the average piece weight for the entire mailing (divide the net weight of the mailing by the number of pieces; the resulting average single-piece weight determines whether the 10-piece or 20-pound minimum applies) or sack by the actual piece count or mail weight for each sack destination, provided that documentation can be provided with the mailing that shows (specifically for each sack) the number of pieces and their total weight.

c. Mailers must note on the accompanying postage statement whether they applied the piece count or weight.

**5.5 Sack Preparation for DBMC Rates**

Required sequence and line 1 labeling:

a. 5-digit: required; for Line 1, use 5-digit ZIP Code destination of parcels (for military mail, the ZIP Code is preceded by the prefixes under M031).

b. ASF: optional, allowed only for mail deposited at an ASF to claim DBMC rate; for Line 1, use L602. DBMC rate eligibility is determined by E752 and Exhibit E751.5.0.

c. BMC: required; for Line 1, use L601, Column B. DBMC rate eligibility is determined by E752 and Exhibit E751.5.0.

d. Origin (mixed) BMC: required (no minimum); for Line 1, ''MXD'' followed by the information in L601, Column B, for the BMC serving the 3-digit ZIP Code of the entry post office.

**5.6 Sack Label Line 2 for DBMC Rates**

Line 2 information:

a. 5-digit: ''PSVC MACH 5D.''

b. ASF: ''PSVC MACH ASF.''

c. BMC: ''PSVC MACH BMC.''

d. Mixed BMC: ''PSVC MACH WKG.''

*M723 Carrier Route Bound Printed Matter*

1.0 BASIC STANDARDS

**1.1 General**

All mailings of Carrier Route Bound Printed Matter (BPM) are subject to the standards in 2.0 through 4.0 and to these general standards:

a. Each mailing must meet the applicable standards in E710, E712, E752, and in M010, M020, and M030.

b. All pieces in a mailing must be within the same processing category as described in C050. A BPM irregular parcel is a piece that is not a machinable parcel as defined in C050.4.1 or a flat as defined in C050.3.1. Irregular parcels also are pieces that meet the size and weight standards for a machinable parcel but are not individually boxed or packaged to withstand processing on BMC parcel sorters under C010.

c. All pieces must be sorted to the finest extent possible under 2.0 through 4.0 or palletized under M045.

d. Subject to M012, pieces must be marked ''Bound Printed Matter'' (or ''BPM'') and ''Carrier Route Presort'' (or ''CAR-RT SORT'').

**1.2 Documentation**

A complete, signed postage statement, using the correct USPS form or an approved facsimile, must accompany each mailing. Documentation of postage is not required if the correct rate is affixed to each piece or if each piece is of identical weight and the pieces are separated by rate (zone) when presented for acceptance.

**1.3 Separation**

Pieces for each zone must be sacked separately. When presented for verification, sacks must be separated by zone. Exception: Pieces for different zones may be sacked together and the sacks do not have to be separated for verification if any of the following apply:

a. Full postage is affixed to each piece in the mailing.

b. The mailing is prepared under P910, P930 or 1.4.

**1.4 Commingling Zones**

Zone rated BPM need not be separated by zones when presented other than as individual pieces or with full correct postage affixed to each piece, subject to this section. Nonidentical-weight pieces not bearing the full correct postage may not be commingled unless authorized by the RCSC manager serving the office of mailing. The mail must be prepared and documented:

a. Under P910 or P930; or

b. Under all these conditions:

(1) A unique number is assigned to each pallet in the mailing and printed on a separate line at the top of the pallet label (above the Line 1 information).

(2) A detailed list accompanies each mailing or mailing segment, sequenced numerically by the numbers assigned to the pallets in the mailing, that shows the post office where the mail is to be entered (entry post office), a unique identifier for the mailing or mailing segment that also appears on the corresponding postage statement, the name and address of the mailer, the permit number (if applicable), the date of mailing, individual line entries for each pallet, and the total number of pieces to each zone and in the entire mailing or mailing segment. Line entries for pallets containing mail for only one zone must show the pallet number, the sortation level, the zone for which the mail is destined, and the total number of pieces for the pallet. Entries for pallets containing mail for more than one zone must also show (by zone) the number of pieces to each 3-digit ZIP Code area and the total number of pieces for that zone for the pallet. Mailings are not accepted if there are discrepancies between the information in the detailed listing or on the postage statement and the results of USPS random verification of piece counts and postage.

**1.5 Residual Pieces**

Residual pieces not sorted under 2.0, 3.0, or 4.0 may be prepared as a Presorted Bound Printed Matter mailing under M722 provided that they are part of the same mailing job and reported on the same postage statement. Residual pieces paid at the Presorted rate do not need to meet a separate 300 piece minimum. These pieces must be separated from the Carrier Route portion when presented to the USPS for verification. Presorted flats weighing 1 pound or less are not eligible for DDU rates.

2.0 REQUIRED PREPARATION—FLATS

**2.1 Required Packaging**

A carrier route package (or packages) must be prepared when there are 10 or more addressed pieces or 10 or more pounds, whichever occurs first, for an individual carrier route. Smaller volumes are not permitted. The maximum weight of each physical package is 40 pounds. Each package must contain at least 2 addressed pieces except for the last package for each carrier route destination under M020. Packages must be labeled with a facing slip unless the package is labeled using a carrier route information line (M014) or an optional endorsement line (M013). Packaging also is subject to these conditions:

a. Identical-weight pieces that weigh 1 pound or less must be prepared using the 10-piece minimum; those that weigh more than 1 pound must be prepared using the 10-pound minimum.

b. For nonidentical-weight pieces, mailers must use either the minimum that applies to the average piece weight for the entire mailing (divide the net weight of the mailing by the number of pieces; the resulting average single-piece weight determines whether the 10-piece or 10-pound minimum applies), or package by the actual piece count or mail weight for each package, if documentation can be provided with the mailing that shows the number of pieces and their total weight.

c. Mailers must note on the accompanying postage statement whether they applied the piece count, weight, or both.

**2.2 Required Sacking**

A direct carrier route sack must be prepared when the quantity of mail for an individual carrier route reaches a minimum of 20 addressed pieces or 20 pounds, whichever occurs first. Smaller volumes are not permitted. Remaining packages must be placed in a 5-digit scheme carrier routes sack and/or a 5-digit carrier routes sack, which have no minimum sack size. Carrier route sacking also is subject to these conditions:

a. Identical-weight pieces that weigh 1 pound or less must be prepared using the 20-piece minimum; those that weigh more than 1 pound must be prepared using the 20-pound minimum.

b. For nonidentical-weight pieces, mailers must use either the minimum that applies to the average piece weight for the entire mailing (divide the net weight of the mailing by the number of pieces; the resulting average single-piece weight determines whether the 20-piece or 20-pound minimum applies), or sack by the actual piece count or mail weight for each sack, if documentation can be provided with the mailing that shows (specifically for each sack) the number of pieces and their total weight.

c. Mailers must note on the accompanying postage statement whether they applied the piece count or weight.

**2.3 Sack Preparation**

Preparation sequence and Line 1 sack labeling:

a. Carrier route: required; for Line 1, use 5-digit ZIP Code destination of packages (for military mail, the ZIP Code is preceded by the prefixes under M031).

b. 5-digit scheme carrier routes: optional (no minimum); for Line 1, use L001, Column B.

c. 5-digit carrier routes: required (no minimum); for Line 1, use 5-digit ZIP Code destination of packages (see M031 for military mail).

**2.4 Sack Label Line 2**

Line 2 information:

a. Carrier route: ''PSVC FLATS CR,'' followed by the route type and number.

b. 5-digit scheme carrier routes: ''PSVC FLATS CR–RTS SCH.''

c. 5-digit carrier routes: ''PSVC FLATS CR–RTS.''

**2.5 Exception to Sacking**

Sacking is not required for packages that are prepared for and entered at DDU rates; such packages may be bedloaded and may weigh up to 40 pounds each.

3.0 REQUIRED PREPARATION—IRREGULAR PARCELS WEIGHING LESS THAN 10 POUNDS

**3.1 Package Preparation**

Packaging is not required in direct carrier route sacks. Otherwise, a carrier route package (or packages) must be prepared when the quantity of addressed pieces for a carrier route reaches a minimum of 10 pieces or 20 pounds, whichever occurs first. Smaller volumes are not permitted. The maximum weight of each physical

package is 40 pounds. Each package must contain at least 2 addressed pieces except for the last package for each carrier route destination under M020. Packages must be labeled with a facing slip unless the package is labeled using a carrier route information line (M014) or an optional endorsement line (M013). Packaging also is subject to these conditions:

a. Identical-weight pieces that weigh two pounds or less must be prepared using the 10-piece minimum; those that weigh more must be prepared using the 20-pound minimum.

b. For nonidentical-weight pieces, mailers must either use the minimum that applies to the average piece weight for the entire mailing (divide the net weight of the mailing by the number of pieces; the resulting average single-piece weight determines whether the 10-piece or 20-pound minimum applies), or package by the actual piece count or mail weight for each package destination, provided that documentation can be provided with the mailing that shows (specifically for each package) the number of pieces and their total weight.

c. Mailers must note on the accompanying postage statement whether they applied the piece count, weight, or both.

**3.2 Required Sacking**

A direct carrier route sack must be prepared when the quantity of mail for an individual carrier route reaches a minimum of 10 addressed pieces or 20 pounds, whichever occurs first. Smaller volumes are not permitted. Remaining packages must be placed in 5-digit carrier routes sacks, which have no minimum sack size. Carrier route sacks also are subject to these conditions:

a. Identical-weight pieces that weigh two pounds or less must be prepared using the 10-piece minimum; those that weigh more must be prepared using the 20-pound minimum.

b. For nonidentical-weight pieces, mailers must either use the minimum that applies to the average piece weight for the entire mailing (divide the net weight of the mailing by the number of pieces; the resulting average single-piece weight determines whether the 10-piece or 20-pound minimum applies), or sack by the actual piece count or mail weight for each sack destination, provided that documentation can be provided with the mailing that shows (specifically for each sack) the number of pieces and their total weight.

c. Mailers must note on the accompanying postage statement whether they applied the piece count or weight.

**3.3 Sack Preparation**

Sack preparation sequence and Line 1 labeling:

a. Carrier route: required; for Line 1, use 5-digit ZIP Code destination of packages (for military mail, the ZIP Code is preceded by the prefixes under M031).

b. 5-digit carrier routes: required (no minimum); for Line 1, use 5-digit ZIP Code destination of packages (for military mail, the ZIP Code is preceded by the prefixes under M031).

**3.4 Sack Label Line 2**

Line 2 information:

a. Carrier route: ''PSVC IRREG CR,'' followed by the route type and number.

b. 5-digit carrier routes: ''PSVC IRREG CR–RTS.''

**3.5 Exception to Sacking**

Sacking is not required for packages when prepared for and entered at DDU rates; such packages may be bedloaded and may weigh up to 40 pounds.

4.0 REQUIRED PREPARATION—IRREGULAR PARCELS WEIGHING 10 POUNDS OR MORE

**4.1 Carrier Route Sack Preparation**

Irregular parcels must be prepared only in direct carrier route sacks. Each carrier route sack must contain a minimum of 20 pounds. Smaller volumes not permitted. Required preparation:

a. Line 1: use 5-digit ZIP Code destination of the pieces.

b. Line 2: ''PSVC IRREG CR,'' followed by the route type and number.

5.0 REQUIRED PREPARATION—MACHINABLE PARCELS

**5.1 Required Carrier Route Sacking**

Machinable parcels may be prepared only in direct carrier route sacks. Each carrier route sack must contain a minimum of 10 addressed pieces or 20 pounds, whichever occurs first. Smaller volumes are not permitted. Carrier route sacks also are subject to these conditions:

a. Identical-weight pieces that weigh two pounds or less must be prepared using the 10-piece minimum; those that weigh more must be prepared using the 20-pound minimum.

b. For nonidentical-weight pieces, mailers must use either the minimum that applies to the average piece weight for the entire mailing (divide the net weight of the mailing by the number of pieces; the resulting average single-piece weight determines whether the 10-piece or 20-pound minimum applies), or sack by the actual piece count or mail weight for each sack destination, provided that documentation can be provided with the mailing that shows (specifically for each sack) the number of pieces and their total weight.

c. Mailers must note on the accompanying postage statement whether they applied the piece count or weight.

**5.2 Sack Label**

Required preparation:

a. Line 1: Use 5-digit ZIP Code destination of the pieces.

b. Line 2: ''PSVC MACH CR,'' followed by the route type and number.

* * * * *

[Add new heading M730 to read as follows:]

*M730 Media Mail*

[Add heading 1.0 to read as follows:]

1.0 BASIC STANDARDS

[Redesignate M630.4.1 through M630.4.3 as M730.1.1 through M730.1.3, respectively.]

[Amend the heading of redesignated 1.1 to read as follows:]

**1.1 General**

[Revise redesignated 1.1 to read as follows:]

There are no presort, sacking, or labeling standards for single-piece Media Mail. Presorted Media Mail must be prepared under 2.0 unless prepared on pallets under M045, or as outside parcels under E713. Mailings of nonmachinable (outside) parcels eligible for presort rates must be prepared to preserve the required presort as instructed by the mailing office postmaster.

**1.2 Marking**

[Amend redesignated 1.2 by changing ''Special Standard Mail'' with ''Media Mail'' and ''SPEC STD'' with ''Media Mail''; no other changes to text.]

* * * * *

[Add new heading 2.0 to read as follows:]

2.0 PREPARATION

[Redesignate M630.4.4 through M630.4.6 as M730.2.1 through M730.2.3, respectively.]

[Amend the heading of redesignated 2.1 to read as follows:]

**2.1 Sacks or Packages on Pallet Preparation (5-Digit Rate)**

[Amend 2.1 to read as follows:]

Five-digit sack or package size (for packages on pallets) and labeling: 5-

digit (only); required (minimum of eight pieces/20 pounds, smaller volume not permitted); 40-pound maximum for packages on pallets; no label required on packages; on sacks, use 5-digit ZIP Code destination of pieces for Line 1, preceded for military mail by the prefixes under M031.

**2.2 Sack Preparation (BMC Rate)**

[Amend redesignated M730.2.2 by removing ''/1,000 cubic inches.'']

**2.3 Sack Line 2**

[Amend redesignated M730.2.3a and 2.3b by replacing ''STD'' and ''STD B'' with ''PSVC''; no other changes to text.]

* * * * *

[Add new heading M740 to read as follows:]

*M740 Library Mail*

[Add heading 1.0 to read as follows:]

1.0 BASIC STANDARDS

[Redesignate M630.5.1 through M630.5.3 as M7401.1 through M740.1.3, respectively.]

**1.1 General**

[Amend redesignated M740.1.1 by replacing ''E630.5.0'' with ''E714''; no other changes to text.]

**1.2 Marking**

[Amend redesignated 1.2 to eliminate ''Library Rate'' as an optional marking in the first sentence and delete the last sentence to read as follows:]

Each piece claimed at Library Mail rates must be marked ''Library Mail'' under M012. Each piece claimed at presorted Library Mail rates also must be marked ''Presorted'' or ''PRSRT'' under M012.

* * * * *

[Add new heading 2.0 to read as follows:]

2.0 PREPARATION

[Redesignate M630.5.4 through M630.5.6 as M740.2.1 through M740.2.3, respectively.]

**2.1 Sack Preparation (5-Digit Rate)**

[Amend redesignated 2.1 by removing ''/1,000 cubic inches''.]

**2.2 Sack Preparation (BMC Rate)**

[Amend redesignated 2.2 by removing ''/1,000 cubic inches''.]

**2.3 Sack Line 2**

[Amend redesignated M740.2.3a and M740.2.3b by replacing ''STD'' and ''STD B'' with ''PSVC''; no other changes to text.]

* * * * *

**M800 All Automation Mail**

* * * * *

*M820 Flat-Size Mail*

1.0 BASIC STANDARDS

* * * * *

**1.2 Mailings**

[Amend 1.2 by revising the second and third sentences to read as follows:]

* * * First-Class Mail and Periodical mailings may include pieces prepared at automation 5-digit, 3-digit, and basic rates, as applicable. Standard Mail mailings may include pieces prepared at automation 3/5 and basic rates. * * *

* * * * *

**1.5 Package Preparation**

[Amend the first sentence of 1.5 by adding the exception to read as follows; and amend the fourth sentence by replacing ''3.1 or 4.1'' with ''4.1 or 5.1.'']

Except for First-Class Mail prepared under 3.0, all pieces must be prepared in packages. * * *

* * * * *

[Add new 1.11 to read as follows:]

**1.11 Tray-Based Preparation**

For First-Class Mail prepared under the tray-based option in 3.0, mailers may not combine FSM 881 and FSM 1000 pieces in the same mailing.

* * * * *

[Revise 2.0 heading to read as follows:]

2.0 FIRST-CLASS MAIL—REQUIRED PACKAGE-BASED PREPARATION

**2.1 Package Preparation**

[Amend 2.1a to make preparation of 5-digit packages optional to read as follows:]

Package size, preparation sequence, and labeling:

a. 5-digit: optional, but required for 5-digit rate eligibility (10-piece minimum, fewer not permitted); red Label D or optional endorsement line (OEL).

* * * * *

**2.2 Tray Preparation**

[Amend 2.2a to make preparation of 5-digit trays optional and to change ''M031'' to ''M032'' to read as follows:]

Tray size, preparation sequence, and Line 1 labeling:

a. 5-digit: optional, but required for 5-digit rate eligibility, full trays, no overflow; for Line 1, use 5-digit ZIP Code destination of packages, preceded for military mail by the prefixes under M032.

* * * * *

[Redesignate current 3.0 and 4.0 as 4.0 and 5.0, respectively, and add new 3.0 to read as follows:]

3.0 FIRST-CLASS MAIL—OPTIONAL TRAY-BASED PREPARATION

Tray size, preparation sequence, and Line 1 labeling:

a. 5-digit: optional, but 5-digit trays required for rate eligibility (90-piece minimum, fewer not permitted); one less-than-full or overflow tray allowed; for Line 1, use 5-digit ZIP Code destination of pieces (for military mail see M031). (Preparation to qualify for 5-digit rate is optional and need not be done for all 5-digit destinations.)

b. 3-digit: required (90-piece minimum, fewer not permitted); one less-than-full or overflow tray allowed; for Line 1, use L002, Column A for 3-digit destinations.

c. Origin 3-digit: required for each 3-digit ZIP Code served by the SCF of the origin (verification) office; no minimum; for Line 1, use L002, Column A for 3-digit destinations.

d. ADC: required (90-piece minimum, fewer not permitted); one less-than-full or overflow tray allowed; group pieces by 3-digit ZIP Code prefix; for Line 1, use L004 (ZIP Code prefixes in Column A must be combined and labeled to the corresponding ADC destination shown in Column B). As an exception, pieces do not have to be grouped by 3-digit ZIP Code prefix in ADC trays if the mailing is prepared using a MLOCR/barcode sorter and standardized documentation is submitted.

e. Mixed ADC: required (no minimum for rate eligibility); group pieces by ADC; for Line 1, use ''MXD'' followed by the city/state/ZIP of the facility serving the 3-digit ZIP Code of the entry post office, as shown in L002, Column C. As an exception, pieces do not have to be grouped by ADCs in mixed ADC trays if the mailing is prepared using a MLOCR/barcode sorter and standardized documentation is submitted.

* * * * *

**M900 Advanced Preparation Options**

*M910 Co-Traying and Co-Sacking Packages of Automation and Presorted Mailings*

1.0 FIRST-CLASS MAIL

* * * * *

**1.2 Package Preparation**

[Amend 1.2 by changing ''M820'' to ''M820.2.1'' to read as follows:]

The automation rate mailing must be packaged and labeled under M820.2.1. The Presorted rate mailing must be packaged and labeled under M130.

* * * * *

**P POSTAGE AND PAYMENT METHODS**

**P000 Basic Information**

*P010 General Standards*

*P011 Payment*

1.0 PREPAYMENT AND POSTAGE DUE

**1.1 Prepayment Conditions**

*[Amend 1.1 by redesignating 1.1b through 1.1e as 1.1c through 1.1f, respectively. Add new item 1.1b to read as follows:]*

The mailer is responsible for proper payment of postage. Postage on all mail must be fully prepaid at the time of mailing, except as specifically provided by standard for:

* * * * *

b. Merchandise return service (S923).

* * * * *

3.0 COLLECTION OF POSTAGE DUE

* * * * *

*[Add new 3.3 and 3.4 to clarify standards for advance deposit accounts and annual accounting fees to read as follows:]*

**3.3 Advance Deposit Account**

Mailers may choose to establish an advance deposit account(s) from which postage, per piece charges, and other fees are deducted. For certain special services, an advance deposit account is required. Mailers may use a single advance deposit account to pay postage due charges for more than one special service (*e.g.,* business reply mail, merchandise return service, and bulk parcel return service).

**3.4 Annual Accounting Fee**

Except for accounts used solely to pay postage due for shortpaid mail, address correction notices, and undeliverable-as-addressed pieces returned to sender (e.g., return service requested), mailers must pay a separate annual accounting fee for each special service paid through an advance deposit account. This fee covers the administrative cost of maintaining the account and provides the mailer with the accounting of all charges deducted from that account. The accounting fee is charged once each 12-month period on the anniversary date of the initial accounting fee payment. The fee may be paid in advance only for the next year and only during the last 60 days of the current service period. The fee charged is that which is in effect on the date of payment.

* * * * *

*P012 Documentation*

* * * * *

*[Amend the heading of 2.0 by replacing ''Standard Mail (A)'' with ''Standard Mail'' to read as follows:]*

2.0 STANDARDIZED DOCUMENTATION—FIRST CLASS MAIL, PERIODICALS AND STANDARD MAIL

**2.1 Basic Standard**

*[Amend 2.1 by replacing ''Standard Mail (A)'' with ''Standard Mail,'' no other changes to text.]*

**2.2 Format and Content**

*[Amend 2.2 by replacing ''Standard Mail (A)'' with ''Standard Mail''; add new 2.2c(3)(c); and amend 2.2c(6) by adding second sentence to read as follows:]*

* * * * *

c. For mail in trays or sacks, the body of the listing reporting these required elements:

* * * * *

(3) * * *; or (c) group destination for automation flats prepared under the tray-based option for each 3-digit in ADC trays and for each ADC in mixed ADC trays.

* * * * *

(6) * * * The tray identification number is optional for tray-based automation flats.

* * * * *

**2.3 Rate Level Column Headings**

* * * * *

*[Amend 2.3 by replacing all references to ''Standard Mail (A)'' with ''Standard Mail'' and by revising 2.3a to provide for separate 5-digit and 3-digit rates for automation First-Class Mail flats to read as follows:]*

The actual name of the rate level (or corresponding abbreviation) is used for column headings required by 2.2 and shown below:

a. Automation First-Class Mail, Periodicals, and Standard Mail:

| Rate | Abbreviation |
|---|---|
| * * * * * * * | |
| 5-Digit [First-Class Mail letters/cards and flats, Periodicals letters and flats, and Standard Mail letters] | 5B |
| 3-Digit [First-Class Mail letters/cards and flats, Periodicals letters and flats, and Standard Mail letters] | 3B |
| * * * * * * * | |
| 3/5 [Standard Mail flats] | 3/5B |
| * * * * * * * | |

* * * * *

*P013 Rate Application and Computation*

1.0 BASIC STANDARDS

* * * * *

*[Amend 1.3 by replacing ''Special Standard Mail'' with ''Media Mail''; no other changes to text.]*

**1.4 Affixing Postage—Single-Piece Rate Mailings**

*[Amend 1.4 by replacing ''Standard Mail (B)'' with ''Package Services'' and amend the first sentence to read as follows:]*

In a postage-affixed Express Mail, Priority Mail, single-piece First-Class Mail, or Package Services mailing, the mailer must affix to each piece a value in adhesive stamps or meter stamps equal to at least the postage required. A mailer also may use precanceled stamps on single-piece First-Class Mail. Less than the correct amount of postage may be affixed only when permitted by standard or specific USPS authorization.

**1.5 Affixing Postage—Other Than Single-Piece Rate Mailings**

*[Amend 1.5 by replacing ''Standard Mail'' with ''Standard Mail and Package Services'' and amending the introductory paragraph to read as follows:]*

In a First-Class Mail postage affixed mailing other than single-piece or a Standard Mail presorted mailing, the mailer must affix to each piece a value in precanceled stamps or meter impressions that equals at least the full amount of postage at the applicable rate.

In a Package Services postage affixed mailing other than single-piece mailing, the mailer must affix to each piece a value in meter impressions that equals at least the full amount of postage at the applicable rate; or:

a. For First-Class Mail, the applicable postage at the lowest rate claimed in the mailing (or a lesser amount if authorized under P760) if all additional postage is paid at the time of mailing.

b. For Standard Mail, the minimum per piece charge, with the pound rate charge paid through an advance deposit account under the applicable standards; or the applicable postage at the lowest rate claimed in the mailing (or a lesser amount if authorized under P760) if all additional postage is paid at the time of mailing.

* * * * *

2.0 RATE APPLICATION—EXPRESS MAIL, FIRST-CLASS MAIL, AND PRIORITY MAIL

* * * * *

**2.4 Priority Mail**

*[Amend 2.4 by revising the third sentence to read as follows:]*

* * * The minimum postage amount per addressed piece is that for a piece weighing 1 pound. * * *

* * * * *

**2.6 Keys and Identification Devices**

*[Amend 2.6 by revising the second sentence to read as follows:]*

* * * Keys and identification devices weighing more than 13 ounces but not more than 1 pound are mailed at the 1-pound Priority Mail rate plus the fee in R100.9.0; keys and identification devices weighing over 1 pound but not more than 2 pounds are mailed at the 2-pound rate plus the fee in R100.9.0.

3.0 RATE APPLICATION—PERIODICALS

* * * * *

**3.2 Applying Pound Rate**

[Amend 3.2 by replacing ''Regular and Preferred outside-county'' with ''Outside-County and Science-of-Agriculture Outside-County'' in the second sentence to read as follows:]

* * * Outside-County and Science-of-Agriculture Outside-County pound rates are based on the weight of the advertising portion of the mail sent to each postal zone (as computed from the entry office) and the weight of the nonadvertising portion without regard to zone. * * *

[Amend 3.3 by replacing ''Classroom rate'' with ''Classroom'' in the fourth and last sentences.]

* * * * *

[Amend the title of 5.0 by replacing ''Standard Mail (B)'' with ''Package Services'' to read as follows:]

5.0 RATE APPLICATION—PACKAGE SERVICES

* * * * *

[Revise the heading of 5.4 to read as follows:]

**5.4 Media Mail**

[Amend 5.4 by replacing ''Special Standard Mail'' with ''Media Mail''; no other changes to text.]

* * * * *

[Amend the heading of 8.0 by replacing ''Standard Mail (A)'' with ''Standard Mail.''']

[Amend the heading of 9.0 by replacing ''Standard Mail (B)'' with ''Package Services'' to read as follows:]

9.0 COMPUTING POSTAGE—PACKAGE SERVICES

[Revise 9.0 in its entirety to clarify how to calculate postage for Package Services to read as follows:]

**9.1 Parcel Post (including Parcel Select), Media Mail, Library Mail, and Single-Piece Bound Printed Matter—Permit Imprint**

To compute the total postage for a mailing, for each weight increment, multiply the number of pieces by the applicable rate per piece. Round each product off to four decimal places. Add the products and round up the total postage to the nearest whole cent.

**9.2 Parcel Post (including Parcel Select), Media Mail, Library Mail, and Single-Piece Bound Printed Matter—Postage Affixed**

For each piece, affix the postage for the weight increment and, if applicable, the zone to which the piece is addressed, as shown in R700. To calculate the total postage for the mailing, add all of the affixed postage amounts for each piece.

**9.3 Presorted and Carrier Route Bound Printed Matter—Permit Imprint**

Presorted and Carrier Route Bound Printed Matter mailings paid with permit imprint are charged a per pound rate and a per piece rate as follows:

a. Per pound rate:

(1) For pieces 1 pound or less, compute the per pound rate by multiplying the total number of addressed pieces by the 1-pound rate for the rate category and zone. Do not round this result.

(2) For pieces weighing more than 1 pound, compute the per pound rate by multiplying the unrounded total weight of the addressed pieces by the pound rate for the category and zone. Do not round this result.

b. Per piece rate. Multiply the total number of addressed pieces by the applicable piece rate.

c. Total Postage. Calculate total postage by adding the total per piece calculation to the total per pound calculation. Round off the total postage to the nearest whole cent.

**9.4 Presorted and Carrier Route Bound Printed Matter—Postage Affixed**

Presorted and Carrier Route Bound Printed Matter mailings with postage affixed are charged a per pound rate and a per piece rate as follows:

a. For each addressed piece, calculate the per pound rate:

(1) If the piece weighs 1 pound or less, the per pound rate is the rate listed in R700.2.0 for the rate category and zone.

(2) If the piece weighs more than 1 pound, compute the per pound rate by multiplying the unrounded weight of the piece by the pound rate for the category and zone. Do not round this result.

b. Postage per piece. Compute the postage for each piece by adding the calculated per pound rate to the per piece rate for the category and zone. Round this number up to the next tenth of a cent. Affix this amount of postage to the piece.

c. Total Postage for Mailing. Add all of the affixed postage amounts for each piece in the mailing.

*P014 Refunds and Exchanges*

* * * * *

2.0 POSTAGE AND FEES REFUNDS

* * * * *

[Amend 2.3 by replacing ''Standard Mail (B)'' with ''Package Services''; no other changes to text.]

**2.4 Full Refund**

[Amend 2.4 by revising 2.4f and 2.4i to read as follows:]

A full refund (100%) may be made when:

* * * * *

f. Fees are paid for special handling, certified mail, Delivery Confirmation, or Signature Confirmation and the article fails to receive the special service for which the fee is paid.

* * * * *

i. An annual presort mailing fee is paid for Presorted First-Class Mail, Standard Mail, Presorted Media Mail, or Presorted Library Mail or a destination

entry mailing fee is paid for destination entry Parcel Post and Bound Printed Matter and no mailings are made during the corresponding 12-month period.

* * * * *

[Effective November 5, 2000, the Postal Service added new P014.2.11 to clarify procedures for refunds for stamps affixed to business reply mail.]

[Amend the fourth sentence of 2.11 to add the new quarterly fee for Qualified Business Reply Mail:]

**2.11 Business Reply Mail**

A business reply mail (BRM) permit holder may request a credit or refund for postage stamps affixed to returned BRM pieces. Only the value of the postage stamps affixed may be credited or refunded. Refunds are not given for foreign postage stamps affixed to BRM. To receive a refund for postage stamps affixed to returned BRM pieces, the permit holder must submit a completed Form 3533 to the postmaster, documenting the excess postage payment for which a credit or refund is desired. The permit holder also must present to the designated office properly faced and banded packages of 100 identical BRM pieces with identical amounts of postage affixed. A charge of $15 per hour, or fraction thereof, is assessed for the workhours used to process the refund. With permission from the postmaster, a BRM permit holder may submit a package with fewer than 100 BRM pieces. Refunds are not given for any BRM or QBRM per piece charges, annual accounting fees, quarterly fees, or monthly maintenance fees.

* * * * *

4.0 REFUND REQUEST FOR EXCESS POSTAGE (VALUE ADDED REFUND)—AT TIME OF MAILING

[Amend 4.1, 4.13, 4.14c, 4.14d, 4.17a(5) and 4.17a(6) and by changing ''Standard Mail (A)'' to ''Standard Mail''; no other changes to text.]

* * * * *

*P021 Stamped Stationery*

* * * * *

2.0 PERSONALIZED STAMPED ENVELOPE

* * * * *

**2.5 Optional information**

[Amend 2.5b by changing ''Standard Mail (A)'' to ''Standard Mail''; no other changes to text.]

* * * * *

*P022 Postage Stamps*

1.0 PURCHASE AND USE

**1.2 Postage Due**

[Amend 1.2 by removing the second sentence to read as follows:]

Postage due must be paid in cash.

* * * * *

*P023 Precanceled Stamps*

1.0 BASIC INFORMATION

* * * * *

**1.2 Use**

[Amend 1.2 by replacing ''Standard Mail (A)'' with ''Standard Mail''; no other changes to text.]

* * * * *

3.0 MAILER PRECANCELLATION

* * * * *

**3.5 Content of Postmark**

[Amend 3.5a by replacing ''Standard Mail (A)'' with ''Standard Mail''; no other changes to text.]

* * * * *

*P030 Postage Meters and Meter Stamps*

1.0 BASIC INFORMATION

* * * * *

[Amend 1.5 by replacing ''Special Standard Mail'' with ''Media Mail''; no other changes to text.]

* * * * *

3.0 METER SETTING

* * * * *

[Amend the title of 3.5 by replacing ''Setting'' with ''Service'' to read as follows:]

**3.5 On-Site Meter Service Program**

[Amend the last sentence of 3.5 to show the new categories for on-site meter setting and add a new sentence to exclude secured postage devices from the meter service fees to read as follows:]

* * * The licensee must pay applicable on-site meter service fees in R900 and postage by check or advance deposit account at the time of the meter service. Secured postage meters are not subject to checking in/checking out fees.

* * * * *

4.0 METER STAMPS

* * * * *

[Amend 4.8 and 4.9 by replacing ''Standard Mail'' with ''Standard Mail and Package Services''; no other changes to text.]

* * * * *

5.0 MAILINGS

[Amend 5.1 by replacing ''Special Standard Mail'' with ''Media Mail'' and by replacing ''Standard Mail (A)'' with ''Standard Mail''; no other changes to text.]

* * * * *

*P040 Permit Imprints*

1.0 BASIC INFORMATION

[Amend 1.1 by replacing ''Standard Mail (A)'' with ''Standard Mail'' and ''Standard Mail (B)'' with ''Package Services''; no other changes to text.]

* * * * *

2.0 INDICIA PREPARATION

* * * * *

[Amend 2.5 by replacing ''Standard Mail (A)'' with ''Standard Mail''; no other changes to text.]

3.0 INDICIA CONTENT

* * * * *

[Amend 3.2 by replacing ''Standard Mail'' with ''Standard Mail and Package Services'' in the heading and content.]

* * * * *

[Amend 3.4a by replacing ''Standard Mail'' with ''Standard Mail and Package Services.''']

[Amend 3.4b by replacing ''Standard Mail (A'' with ''Standard Mail''; no other changes to text.]

4.0 INDICIA FORMAT

* * * * *

[Amend heading of Exhibit 4.1a by replacing ''Standard Mail (A) Official Mail'' with ''Standard Mail Official Mail'' and ''Standard Mail (B) Official Mail'' with ''Package Services Official Mail''; replace indicia example ''SPECIAL STANDARD MAIL'' with ''MEDIA MAIL''; no other changes to exhibit.]

* * * * *

[Amend the title of Exhibit 4.1b to read as follows:]

**Exhibit 4.1b Indicia Formats for First-Class Mail, Standard Mail, and Package Services**

[Amend Exhibit 4.1b by replacing ''Standard Mail (A)'' with ''Standard Mail,'' ''Special Standard Mail'' with ''Media Mail,'' and ''PP D/S'' with ''Parcel Select.''']

* * * * *

*P070 Mixed Classes*

1.0 ATTACHMENTS OF DIFFERENT CLASSES

[Amend 1.1 by replacing ''Standard Mail'' with ''Standard Mail and Package Service Mail''; no other changes to text.]

[Amend 1.2 and 1.3 by replacing ''Standard Mail (A)'' with ''Standard Mail''; no other changes to text.]

* * * * *

2.0 ENCLOSURE IN PERIODICALS PUBLICATION

[Amend 2.1 through 2.10 by replacing ''Standard Mail (A)'' with ''Standard Mail''; no other changes to text.]

[Revise heading of 3.0 to read as follows:]

3.0 ENCLOSURE IN STANDARD MAIL AND PACKAGE SERVICES MAIL

[Amend 3.2 by replacing ''Standard Mail (A)'' with ''Standard Mail''; no other changes to text.]

* * * * *

[Amend heading of 5.0 by replacing ''Special Standard Mail'' with ''Media Mail'' to read as follows:]

5.0 COMBINED MAILINGS OF MEDIA MAIL AND BOUND PRINTED MATTER

* * * * *

**5.4 Rating of Unmarked Parcel**

[Amend 5.4 by replacing ''Special Standard Mail'' with ''Media Mail'' and amend the introductory paragraph in 5.4 to include Inter-BMC/ASF rates to read as follows:]

A parcel containing Bound Printed Matter and Media Mail is charged postage at the Inter-BMC/ASF Parcel Post rates if it:

* * * * *

**P200 Periodicals**

1.0 BASIC INFORMATION

* * * * *

[Amend 1.4 by replacing ''Standard Mail'' with ''Standard Mail and Package Services''; no other changes to text.]

* * * * *

[Amend 1.9 by replacing ''Standard Mail'' with ''Standard Mail and Package Services'; no other changes to text.]

* * * * *

**P600 Standard Mail**

1.0 BASIC INFORMATION

[Amend 1.1 by redesignating 1.1b as P700.1.1, redesignating 1.1a as 1.1, and replacing ''Standard Mail (A)'' with ''Standard Mail''; no other changes to text.]

* * * * *

[Amend the heading of 2.0 to delete ''Standard Mail (A)'' to read as follows:]

2.0 PRESORTED AND ENHANCED CARRIER ROUTE RATES

* * * * *

[Amend the heading of 3.0 to delete ''Standard Mail (A)'' to read as follows:]

3.0 AUTOMATION RATES

* * * * *

[Add new 4.0 to read as follows:]

4.0 MACHINABLE PARCEL BARCODED DISCOUNT

**4.1 All Parcels in Mailing Eligible**

If 100% of the pieces in a mailing are eligible for the machinable parcel barcoded discount under E610 and E620, then the mailing may be paid with meter stamps, permit imprint, or precanceled postage under the applicable standards.

**4.2 Less than 100% Eligibility**

If less than 100% of the parcels in the mailing are eligible for the machinable parcel barcoded discount, then the following standards apply:

a. Payment with precanceled stamps is not permitted.

b. Metered postage may be used only if exact postage is affixed to each piece in the mailing.

c. Payment with permit imprint is permitted only under a manifest mailing system (P910).

[Add new 5.0 to read as follows:]

5.0 MAIL WITH SPECIAL SERVICES

**5.1 Bulk Insurance**

Mailings on which bulk insurance is requested must have postage and fees paid with permit imprint under a manifest mailing system (P910).

**5.2 Electronic Option Delivery Confirmation**

If electronic option Delivery Confirmation is requested for all of the pieces in the mailing and the mailing consists of pieces of identical weight, then postage may be paid with metered postage or permit imprint under the applicable standards in 2.0. If electronic option Delivery Confirmation is not requested for all of the pieces in the mailing, or if the pieces are not identical weight, then either the exact metered postage must be affixed to each piece or postage must be paid with permit imprint under a manifest mailing system (P910). Use of precanceled stamps is not permitted with Delivery Confirmation.

**5.3 Return Receipt for Merchandise**

If return receipt for merchandise is requested for all of the pieces in the mailing and the mailing consists of pieces of identical weight, then postage may be paid with metered postage or permit imprint under the applicable standards in 2.0. If return receipt for merchandise is not requested for all of the pieces in the mailing, or if the pieces are not identical weight, then either the exact metered postage must be affixed to each piece or postage must be paid with permit imprint under a manifest mailing system (P910). Use of precanceled stamps is not permitted with return receipt for merchandise.

[Redesignate the heading P700 as P900. Redesignate the heading and contents of P710, P720, P730, P750, and P760 as P910, P920, P930, P950, and P960, respectively.]

[Add new P700 to read as follows:]

**P700 Package Services**

1.0 BASIC INFORMATION

**1.1 Payment Method**

[Redesignate P600.1.1b as the contents of 1.1 and amend for clarity to read as follows:]

The mailer is responsible for proper postage payment. Subject to the corresponding standards, postage for Package Services mail may be paid by any method except precanceled stamps. Pieces with postage affixed must bear the correct postage unless excepted by standard. Permit imprint may be used for mailings that contain nonidentical-weight pieces only under P910, P920, or P930. Permit imprint may be used for identical weight pieces provided the mail can be separated at acceptance into groups that each contain pieces subject to the same zone and same combination of rates (e.g., all are zone 4, Inter-BMC, with a BMC presort discount and a barcoded discount). Identical weight permit imprint mail also may be mailed under P910, P920, or P930.

**1.2 Postage Statement and Documentation**

A complete, signed postage statement, using the correct USPS form or an approved facsimile, must accompany each presorted and/or destination entry rate Package Services mailing, and any mailing paid with permit imprint. The postage statement must be supported by documentation as required by P012 and the rate claimed unless the correct rate is affixed to each piece or if each piece is of identical weight and the pieces are separated by rate when presented for acceptance.

**P900 Special Postage Payment Systems**

* * * * *

*P920 Optional Procedure (OP) Mailing System*

1.0 BASIC INFORMATION

[Amend 1.1 by replacing ''Standard Mail'' with ''Standard Mail and Package Services Mail''; no other changes to text.]

* * * * *

*P950 Plant-Verified Drop Shipment (PVDS)*

1.0 DESCRIPTION

* * * * *

[Amend 1.2c and 1.3b by replacing ''Standard Mail'' with ''Standard Mail and Package Services''; no other changes to text.]

* * * * *

2.0 PROGRAM PARTICIPATION

* * * * *

[Amend 2.3e and 2.5 by replacing ''Standard Mail'' with ''Standard Mail and Package Services''; no other changes to text.]

* * * * *

[Amend 2.7 by replacing ''Standard Mail (A)'' with ''Standard Mail''; no other changes to text.]

[Revise heading of 2.8 to read as follows:]

**2.8 Postage Statement—Package Services Mail**

[Amend 2.8 by replacing ''Standard Mail (B)'' with ''Package Services''; no other changes to text.]

* * * * *

4.0 POSTAGE

* * * * *

[Amend 4.2 by replacing ''Standard Mail (A)'' with ''Standard Mail''; no other changes to text.]

[Revise heading of 4.3 to read as follows:]

**4.3 Package Services Mail**

[Amend 4.3 by replacing ''Standard Mail (B)'' with ''Package Services''; no other changes to text.]

* * * * *

[Amend the heading of 5.0 by replacing ''Standard Mail (A)'' with ''Standard Mail''; no other changes to text.]

* * * * *

[Revise heading of 6.0 to read as follows:]

6.0 PACKAGE SERVICES PVDS OPTION

* * * * *

[Amend 6.2 by replacing ''Standard Mail (B)'' with ''Package Services''; no other changes to text.]

* * * * *

[Amend heading of P960 by removing ''(A)'' to read as follows:]

*P960 First-Class or Standard Mail Mailings With Different Payment Methods*

* * * * *

[Amend entire R module to read as follows:]

BILLING CODE 7710–12–P

# R000 Stamps and Stationery

## 1.0 PLAIN STAMPED ENVELOPES (P021)

Fee, in addition to the postage value preprinted on the envelope:

| Type | Size | Fee | |
|---|---|---|---|
| | | Each | 500 |
| Basic[1] | 6-3/4 | $0.08 | $12.00 |
| | 10 | 0.08 | 14.00 |
| Special[2] | Any | 0.09 | 19.00 |

1. Includes regular, window, precanceled regular, and precanceled window envelopes.
2. Includes envelopes with patched-in stamps (e.g., hologram envelopes).

## 2.0 PERSONALIZED STAMPED ENVELOPES (P021)

Fee, in addition to the postage value preprinted on the envelope:

| Type | Size | Fee | |
|---|---|---|---|
| | | 50 | 500 |
| Basic[1] | 6-3/4 | $3.50 | $17.00 |
| | 10 | 3.50 | 20.00 |
| Special[2] | Any | 4.50 | 25.00 |

1. Includes regular, window, precanceled regular, and precanceled window envelopes.
2. Includes envelopes with patched-in stamps (e.g., hologram envelopes).

## 3.0 STAMPED CARDS (P021)

Fee, in addition to the postage value preprinted on the card:

| Type | Fee |
|---|---|
| Single card | $0.02 |
| Double reply-paid card | 0.04 |
| Sheet of 40 cards (uncut) | 0.80 |

## 4.0 POSTAGE STAMPS

Postage stamps are available in the following denominations:

| Purpose | Form | Denomination |
|---|---|---|
| Regular Postage | Panes of up to 100 | $0.01, .02, .03, .04, .05, .06, .07, .08, .09, .10, .11, .14, .15, .17, .19, .20, .21, 22, .23, .25, .29, .30, .32, .33, .34, .35, .39, .40, .45, .46, .48, .50, .52, .55, .56, .60, .65, .75, .77, .78, .80, $1, $2, $3.50, $5, $12.25 |
| | Booklets | $0.20 ($2.00 booklet) |
| | | $0.34 ($3.40 and $6.80 booklets) |
| | Coils of 100 | $0.05, .10, .20, .21 (additional ounce postage), .22, .29, .33, .34 |
| | Coils of 3,000 | $0.01, .02, .03, .04, .05, .10, .11, .12, .14, .15, .17, .19, .20, .22, .23, .25, .29, .33, .34 |
| | Coils of 10,000 | $0.01, .02, .03, .05, .10, .23, .25, .33, .34 |
| Precanceled Presorted Rate Postage — First-Class Mail and Standard Mail | Coils of 500, 3,000, and 10,000 | Various nondenominated (available only to permit holders) |
| Commemorative | Panes of up to 50 | $0.34 and other denominations |
| | 20-Stamp Booklets | $0.34 ($6.80 booklets) |
| Breast Cancer Research | Panes of up to 20 | Purchase price of $0.40; postage value equivalent to First-Class Mail nonautomation single-piece rate ($0.34); remainder is contribution to fund breast cancer research. |

# R100 First-Class Mail

## 1.0 NONAUTOMATION—SINGLE PIECES WEIGHING 13 OUNCES OR LESS

**Card Rate**
1.1

Single and double cards meeting the standards in C100:

| Type | Rate |
|---|---|
| Single | $0.200 |

**Letters, Flats, and Parcels**
1.2

Letters, flats, and parcels (i.e., not card rate); nonstandard surcharge in 10.0 might apply:

| Weight Increment | Rate |
|---|---|
| First ounce or fraction of an ounce | $0.340 |
| Each additional ounce or fraction | 0.210 |

## 2.0 NONAUTOMATION—PRESORTED

**Card Rate**
2.1

Single and double cards meeting the standards in C100: $0.180 each.

**Letters, Flats, and Parcels**
2.2

Letters, flats, and parcels (i.e., not card rate); nonstandard surcharge in 10.0 might apply:

| Weight Increment | Rate |
|---|---|
| First ounce or fraction of an ounce | |
| (For pieces weighing 2 ounces or less) | $0.320 |
| (For pieces weighing more than 2 ounces) | 0.274 |
| Each additional ounce or fraction | 0.210 |

## 3.0 AUTOMATION—QUALIFIED BUSINESS REPLY MAIL

**Card Rate**
3.1

Single cards meeting the standards in E150 and S922:

| Type | Rate[1] |
|---|---|
| Single | $0.170 |

1. QBRM is also subject to fees in R900.

**Letters**
3.2

Letter-size single pieces other than cards meeting the standards in E150 and S922:

| Weight Increment | Rate[1] |
|---|---|
| First ounce or fraction of an ounce | $0.310 |
| Second ounce or fraction | 0.210 |

1. QBRM is also subject to fees in R900.

## 4.0 AUTOMATION—BASIC

**Card Rate** 4.1 Single and double cards meeting the standards in C100: $0.164 each.

**Letters** 4.2 Letter-size pieces other than card rate:

| Weight Increment | Rate |
|---|---|
| First ounce or fraction of an ounce | |
| (For pieces weighing 2 ounces or less) | $0.278 |
| (For pieces weighing more than 2 ounces) | 0.232 |
| Each additional ounce or fraction | 0.210 |

**Flats** 4.3 Flat-size pieces; nonstandard surcharge in 10.0 might apply:

| Weight Increment | Rate |
|---|---|
| First ounce or fraction of an ounce | |
| (For pieces weighing 2 ounces or less) | $0.310 |
| (For pieces weighing more than 2 ounces) | 0.264 |
| Each additional ounce or fraction | 0.210 |

## 5.0 AUTOMATION—3-DIGIT

**Card Rate** 5.1 Single and double cards meeting the standards in C100: $0.158 each.

**Letters** 5.2 Letter-size pieces other than card rate:

| Weight Increment | Rate |
|---|---|
| First ounce or fraction of an ounce | |
| (For pieces weighing 2 ounces or less) | $0.267 |
| (For pieces weighing more than 2 ounces) | 0.221 |
| Each additional ounce or fraction | 0.210 |

**Flats** 5.3 Flat-size pieces; nonstandard surcharge in 10.0 might apply:

| Weight Increment | Rate |
|---|---|
| First ounce or fraction of an ounce | |
| (For pieces weighing 2 ounces or less) | $0.295 |
| (For pieces weighing more than 2 ounces) | 0.249 |
| Each additional ounce or fraction | 0.210 |

## 6.0 AUTOMATION—5-DIGIT

**Card Rate** 6.1 Single and double cards meeting the standards in C100: $0.151 each.

**Letters** 6.2 Letter-size pieces other than card rate:

| Weight Increment | Rate |
|---|---|
| First ounce or fraction of an ounce | |
| (For pieces weighing 2 ounces or less) | $0.253 |
| (For pieces weighing more than 2 ounces) | 0.207 |
| Each additional ounce or fraction | 0.210 |

**Flats**
6.3

Flat-size pieces; nonstandard surcharge in 10.0 might apply:

| Weight Increment | Rate |
|---|---|
| First ounce or fraction of an ounce | |
| (For pieces weighing 2 ounces or less) | $0.275 |
| (For pieces weighing more than 2 ounces) | 0.229 |
| Each additional ounce or fraction | 0.210 |

## 7.0 AUTOMATION—CARRIER ROUTE

**Card Rate**
7.1

Single and double cards meeting the standards in C100: $0.140 each.

**Letters**
7.2

Letter-size pieces other than card rate:

| Weight Increment | Rate |
|---|---|
| First ounce or fraction of an ounce | |
| (For pieces weighing 2 ounces or less) | $0.243 |
| (For pieces weighing more than 2 ounces) | 0.197 |
| Each additional ounce or fraction | 0.210 |

**Summary of First-Class Rates**
7.3

| Letters, Flats, and Parcels Weight Not Over (ounces) | Nonautomation | | Automation | | | | | | |
|---|---|---|---|---|---|---|---|---|---|
| | | | Letter-Size | | | | Flat-Size | | |
| | Single-Piece | Pre-sorted | Basic | 3-Digit | 5-Digit | Carrier Route | Basic | 3-Digit | 5-Digit |
| 1 | $0.340[1] | $0.320[1] | $0.278 | $0.267 | $0.253 | $0.243 | $0.310[1] | $0.295[1] | $0.275[1] |
| 2 | 0.550 | 0.530 | 0.488 | 0.477 | 0.463 | 0.453 | 0.520 | 0.505 | 0.485 |
| 3[2] | 0.760 | 0.694 | 0.652 | 0.641 | 0.627 | 0.617 | 0.684 | 0.669 | 0.649 |
| 4 | 0.970 | 0.904 | 0.862[3] | 0.851[3] | 0.837[3] | 0.827[3] | 0.894 | 0.879 | 0.859 |
| 5 | 1.180 | 1.114 | — | — | — | — | 1.104 | 1.089 | 1.069 |
| 6 | 1.390 | 1.324 | — | — | — | — | 1.314 | 1.299 | 1.279 |
| 7 | 1.600 | 1.534 | — | — | — | — | 1.524 | 1.509 | 1.489 |
| 8 | 1.810 | 1.744 | — | — | — | — | 1.734 | 1.719 | 1.699 |
| 9 | 2.020 | 1.954 | — | — | — | — | 1.944 | 1.929 | 1.909 |
| 10 | 2.230 | 2.164 | — | — | — | — | 2.154 | 2.139 | 2.119 |
| 11 | 2.440 | 2.374 | — | — | — | — | 2.364 | 2.349 | 2.329 |
| 12 | 2.650 | 2.584 | — | — | — | — | 2.574 | 2.559 | 2.539 |
| 13 | 2.860 | 2.794 | — | — | — | — | 2.784 | 2.769 | 2.749 |
| **Card Rate[4]** | | | | | | | | | |
| Single | 0.20 | 0.18 | 0.164 | 0.158 | 0.151 | 0.140 | — | — | — |

1. Nonstandard surcharge in 10.0 might apply: single-piece $0.11; presorted and automation $0.05.
2. Presorted and automation rates for pieces weighing over 2 ounces reflect a first-ounce discount of $0.046 per piece.
3. Weight not to exceed 3.3 ounces; pieces over 3 ounces subject to additional standards.
4. Rates shown apply to each single or double postcard when originally mailed; reply half of double postcard must bear postage at applicable rate when returned unless prepared as business reply mail.

## 8.0 PRIORITY MAIL

| Weight Not Over (pounds)[1] | Zone | | | | | |
|---|---|---|---|---|---|---|
| | L, 1, 2, & 3 | 4 | 5 | 6 | 7 | 8 |
| 1 | $3.50 | $3.50 | $3.50 | $3.50 | $3.50 | $3.50 |
| 2[2] | 3.95 | 3.95 | 3.95 | 3.95 | 3.95 | 3.95 |
| 3 | 5.15 | 5.15 | 5.15 | 5.15 | 5.15 | 5.15 |
| 4 | 6.35 | 6.35 | 6.35 | 6.35 | 6.35 | 6.35 |
| 5 | 7.55 | 7.55 | 7.55 | 7.55 | 7.55 | 7.55 |
| 6 | 7.90 | 8.10 | 8.15 | 8.25 | 9.50 | 10.35 |
| 7 | 8.25 | 8.65 | 8.75 | 8.95 | 10.45 | 11.65 |
| 8 | 8.50 | 9.20 | 9.35 | 9.65 | 11.40 | 12.95 |
| 9 | 8.65 | 9.75 | 9.95 | 10.35 | 12.35 | 14.25 |
| 10 | 8.75 | 10.30 | 10.55 | 11.05 | 13.30 | 15.55 |
| 11 | 9.00 | 10.85 | 11.15 | 11.75 | 14.25 | 16.85 |
| 12 | 9.25 | 11.40 | 11.75 | 12.45 | 15.20 | 18.15 |
| 13 | 9.60 | 11.95 | 12.35 | 13.15 | 16.15 | 19.45 |
| 14 | 9.95 | 12.50 | 12.95 | 13.85 | 17.10 | 20.75 |
| 15 | 10.30 | 13.05 | 13.55 | 14.55 | 18.05 | 22.05 |
| 16 | 10.65 | 13.60 | 14.15 | 15.25 | 19.00 | 23.35 |
| 17 | 11.00 | 14.15 | 14.75 | 15.95 | 19.95 | 24.65 |
| 18 | 11.35 | 14.70 | 15.35 | 16.65 | 20.90 | 25.95 |
| 19 | 11.70 | 15.25 | 15.95 | 17.35 | 21.85 | 27.25 |
| 20 | 12.05 | 15.80 | 16.55 | 18.05 | 22.80 | 28.55 |
| 21 | 12.40 | 16.35 | 17.15 | 18.75 | 23.75 | 29.85 |
| 22 | 12.75 | 16.90 | 17.75 | 19.45 | 24.70 | 31.15 |
| 23 | 13.10 | 17.45 | 18.35 | 20.15 | 25.65 | 32.45 |
| 24 | 13.45 | 18.00 | 18.95 | 20.85 | 26.60 | 33.75 |
| 25 | 13.80 | 18.55 | 19.55 | 21.55 | 27.55 | 35.05 |
| 26 | 14.15 | 19.10 | 20.15 | 22.25 | 28.50 | 36.35 |
| 27 | 14.50 | 19.65 | 20.75 | 22.95 | 29.45 | 37.65 |
| 28 | 14.85 | 20.20 | 21.35 | 23.65 | 30.40 | 38.95 |
| 29 | 15.20 | 20.75 | 21.95 | 24.35 | 31.35 | 40.25 |
| 30 | 15.55 | 21.30 | 22.55 | 25.05 | 32.30 | 41.55 |
| 31 | 15.90 | 21.85 | 23.15 | 25.75 | 33.25 | 42.85 |
| 32 | 16.25 | 22.40 | 23.75 | 26.45 | 34.20 | 44.15 |
| 33 | 16.60 | 22.95 | 24.35 | 27.15 | 35.15 | 45.45 |
| 34 | 16.95 | 23.50 | 24.95 | 27.85 | 36.10 | 46.75 |
| 35 | 17.30 | 24.05 | 25.55 | 28.55 | 37.05 | 48.05 |
| 36 | 17.65 | 24.60 | 26.15 | 29.25 | 38.00 | 49.35 |
| 37 | 18.00 | 25.15 | 26.75 | 29.95 | 38.95 | 50.65 |
| 38 | 18.35 | 25.70 | 27.35 | 30.65 | 39.90 | 51.95 |
| 39 | 18.70 | 26.25 | 27.95 | 31.35 | 40.85 | 53.25 |
| 40 | 19.05 | 26.80 | 28.55 | 32.05 | 41.80 | 54.55 |
| 41 | 19.40 | 27.35 | 29.15 | 32.75 | 42.75 | 55.85 |
| 42 | 19.75 | 27.90 | 29.75 | 33.45 | 43.70 | 57.15 |
| 43 | 20.10 | 28.45 | 30.35 | 34.15 | 44.65 | 58.45 |
| 44 | 20.45 | 29.00 | 30.95 | 34.85 | 45.60 | 59.75 |
| 45 | 20.80 | 29.55 | 31.55 | 35.55 | 46.55 | 61.05 |
| 46 | 21.15 | 30.10 | 32.15 | 36.25 | 47.50 | 62.35 |
| 47 | 21.50 | 30.65 | 32.75 | 36.95 | 48.45 | 63.65 |
| 48 | 21.85 | 31.20 | 33.35 | 37.65 | 49.40 | 64.95 |
| 49 | 22.20 | 31.75 | 33.95 | 38.35 | 50.35 | 66.25 |
| 50 | 22.55 | 32.30 | 34.55 | 39.05 | 51.30 | 67.55 |
| 51 | 22.90 | 32.85 | 35.15 | 39.75 | 52.25 | 68.85 |
| 52 | 23.25 | 33.40 | 35.75 | 40.45 | 53.20 | 70.15 |
| 53 | 23.60 | 33.95 | 36.35 | 41.15 | 54.15 | 71.45 |
| 54 | 23.95 | 34.50 | 36.95 | 41.85 | 55.10 | 72.75 |
| 55 | 24.30 | 35.05 | 37.55 | 42.55 | 56.05 | 74.05 |
| 56 | 24.65 | 35.60 | 38.15 | 43.25 | 57.00 | 75.35 |
| 57 | 25.00 | 36.15 | 38.75 | 43.95 | 57.95 | 76.65 |
| 58 | 25.35 | 36.70 | 39.35 | 44.65 | 58.90 | 77.95 |
| 59 | 25.70 | 37.25 | 39.95 | 45.35 | 59.85 | 79.25 |
| 60 | 26.05 | 37.80 | 40.55 | 46.05 | 60.80 | 80.55 |
| 61 | 26.40 | 38.35 | 41.15 | 46.75 | 61.75 | 81.85 |
| 62 | 26.75 | 38.90 | 41.75 | 47.45 | 62.70 | 83.15 |
| 63 | 27.10 | 39.45 | 42.35 | 48.15 | 63.65 | 84.45 |
| 64 | 27.45 | 40.00 | 42.95 | 48.85 | 64.60 | 85.75 |
| 65 | 27.80 | 40.55 | 43.55 | 49.55 | 65.55 | 87.05 |
| 66 | 28.15 | 41.10 | 44.15 | 50.25 | 66.50 | 88.35 |
| 67 | 28.50 | 41.65 | 44.75 | 50.95 | 67.45 | 89.65 |
| 68 | 28.85 | 42.20 | 45.35 | 51.65 | 68.40 | 90.95 |
| 69 | 29.20 | 42.75 | 45.95 | 52.35 | 69.35 | 92.25 |
| 70 | 29.55 | 43.30 | 46.55 | 53.05 | 70.30 | 93.55 |

1. Parcels that weigh less than 15 pounds but measure more than 84 inches in combined length and girth are charged the applicable rate for a 15-pound parcel.
2. The 2-pound rate is charged for matter sent in a flat-rate envelope provided by the USPS, regardless of the actual weight of the piece.

## 9.0 KEYS AND IDENTIFICATION DEVICES

| Weight Not Over (ounces) | Rate[1] |
|---|---|
| 1[2] | $0.69 |
| 2 | 0.90 |
| 3 | 1.11 |
| 4 | 1.32 |
| 5 | 1.53 |
| 6 | 1.74 |
| 7 | 1.95 |
| 8 | 2.16 |
| 9 | 2.37 |

| Weight Not Over (ounces) | Rate[1] |
|---|---|
| 10 | 2.58 |
| 11 | 2.79 |
| 12 | 3.00 |
| 13 | 3.21 |
| 1 pound | 3.85 |
| 2 pounds | 4.30 |

1. Includes $0.35 fee.
2. Nonstandard surcharge in 10.0 might apply.

## 10.0 NONSTANDARD SURCHARGES

Surcharge per piece:

a. Single-piece rate: $0.11.

b. Presorted and automation (flat-size) rate: $0.05.

## 11.0 FEES

**Address Correction Service Fee**
11.1

Fees per correction:

a. Manual notice: $0.60.

b. Electronic notice: $0.20.

**Presort Mailing Fee**
11.2

Presort mailing fee, per 12-month period, per office of mailing: $125.00.

**Pickup Fee**
11.3

Priority Mail only, per occurrence: $10.25. May be combined with Express Mail and Package Services Parcel Post pickups.

# R200 Periodicals

## 1.0 OUTSIDE-COUNTY—EXCLUDING SCIENCE-OF-AGRICULTURE

**Pound Rates**
1.1 Per pound or fraction:

a. For the nonadvertising portion: $0.173.

b. For the advertising portion:

| Zone | Rate |
|---|---|
| Delivery Unit | $0.148 |
| SCF | 0.188 |
| 1 & 2 | 0.230 |
| 3 | 0.245 |
| 4 | 0.283 |
| 5 | 0.341 |
| 6 | 0.401 |
| 7 | 0.474 |
| 8 | 0.537 |

**Piece Rates**
1.2 Per addressed piece:

| | | Automation[1] | |
|---|---|---|---|
| Presort Level | Nonautomation | Letter-Size | Flat-Size |
| Basic | $0.325 | $0.260 | $0.284 |
| 3-Digit | 0.276 | 0.225 | 0.242 |
| 5-Digit | 0.214 | 0.174 | 0.190 |
| Carrier Route | 0.136 | — | — |
| High Density | 0.111 | — | — |
| Saturation | 0.093 | — | — |

1. Lower maximum weight limits apply: letter-size at 3 ounces (or 3.3 ounces for heavy letters); flat-size at 16 ounces (FSM 881) and 6 pounds (FSM 1000).

**Discounts**
1.3 Piece rate discounts:

a. Nonadvertising adjustment for each 1% of nonadvertising content: $0.00065 per piece.

b. Delivery unit piece discount for each addressed piece eligible for the delivery unit rate under E250: $0.017.

c. SCF piece discount for each addressed piece eligible for the SCF rate under E250: $0.008.

**Nonprofit**
1.4 Authorized nonprofit mailers receive a discount of 5% off the total Outside-County postage excluding the postage for advertising pounds. The 5% discount does not apply to commingled nonsubscriber copies in excess of the 10% allowance provided under E215.

**Classroom**
1.5 Authorized Classroom mailers receive a discount of 5% off the total Outside-County postage excluding the postage for advertising pounds. The 5% discount does not apply to commingled nonsubscriber copies in excess of the 10% allowance provided under E215.

## 2.0 OUTSIDE-COUNTY—SCIENCE-OF-AGRICULTURE

**Pound Rates**
2.1 Per pound or fraction:

a. For the nonadvertising portion: $0.173.

b. For the advertising portion:

| Zone | Rate |
|---|---|
| Delivery Unit | $0.111 |
| SCF | 0.141 |
| 1 & 2 | 0.173 |
| 3 | 0.245 |
| 4 | 0.283 |
| 5 | 0.341 |
| 6 | 0.401 |
| 7 | 0.474 |
| 8 | 0.537 |

**Piece Rates**
2.2 Per addressed piece:

| | | Automation[1] | |
|---|---|---|---|
| Presort Level | Nonautomation | Letter-Size | Flat-Size |
| Basic | $0.325 | $0.260 | $0.284 |
| 3-Digit | 0.276 | 0.225 | 0.242 |
| 5-Digit | 0.214 | 0.174 | 0.190 |
| Carrier Route | 0.136 | — | — |
| High Density | 0.111 | — | — |
| Saturation | 0.093 | — | — |

1. Lower maximum weight limits apply: letter-size at 3 ounces (or 3.3 ounces for heavy letters); flat-size at 16 ounces (FSM 881) and 6 pounds (FSM 1000).

**Discounts**
2.3 Piece rate discounts:

a. Nonadvertising adjustment for each 1% of nonadvertising content: $0.00065 per piece.

b. Delivery unit piece discount for each addressed piece eligible for the delivery unit rate under E250: $0.017.

c. SCF piece discount for each addressed piece eligible for the SCF rate under E250: $0.008.

## 3.0 IN-COUNTY

**Pound Rates**
3.1 Per pound or fraction:

| Zone | Rate |
|---|---|
| Delivery Unit | $0.113 |
| All Others | 0.144 |

**Piece Rates**
3.2

Per addressed piece:

| Presort Level | Nonautomation | Automation[1] Letter-Size | Automation[1] Flat-Size |
|---|---|---|---|
| Basic | $0.100 | $0.049 | $0.073 |
| 3-Digit | 0.092 | 0.047 | 0.068 |
| 5-Digit | 0.083 | 0.044 | 0.062 |
| Carrier Route | 0.047 | — | — |
| High Density | 0.032 | — | — |
| Saturation | 0.026 | — | — |

1. Lower maximum weight limits apply: letter-size at 3 ounces (or 3.3 ounces for heavy letters); flat-size at 16 ounces (FSM 881) and 6 pounds (FSM 1000).

**Discount**
3.3

Delivery unit piece discount for each addressed piece eligible for the delivery unit rate under E250: $0.005.

**4.0 RIDE-ALONG EXPERIMENT (G094)**

**Fee**
4.1

Per piece: $0.10.

**5.0 FEES**

**Application Fees**
5.1

Per application:

a. Original entry: $350.00.

b. News agent registry: $40.00.

c. Additional entry: $50.00.

d. Reentry: $40.00.

**Address Correction Service Fees**
5.2

Fees per correction:

a. Manual notice: $0.60.

b. Electronic notice: $0.20.

# R500 Express Mail

## 1.0 EXPRESS MAIL—ALL SERVICE LEVELS

| Weight Not Over (pounds) | Service[1] Custom Designed | Service[1] Next Day & Second Day PO to PO | Service[1] Next Day & Second Day PO to Addressee | Weight Not Over (pounds) | Service[1] Custom Designed | Service[1] Next Day & Second Day PO to PO | Service[1] Next Day & Second Day PO to Addressee |
|---|---|---|---|---|---|---|---|
| 1/2 | 9.25 | 9.40 | 12.25 | 36 | 66.55 | 66.70 | 68.80 |
| 1 | 13.75 | 13.90 | 16.00 | 37 | 67.80 | 67.95 | 70.30 |
| 2[2] | 13.75 | 13.90 | 16.00 | 38 | 69.35 | 69.30 | 71.90 |
| 3 | 16.65 | 16.80 | 18.85 | 39 | 70.95 | 70.60 | 73.50 |
| 4 | 19.45 | 19.60 | 21.70 | 40 | 72.55 | 72.00 | 75.10 |
| 5 | 22.25 | 22.40 | 24.50 | 41 | 74.15 | 73.60 | 76.70 |
| 6 | 25.05 | 25.20 | 27.30 | 42 | 75.75 | 75.20 | 78.35 |
| 7 | 27.75 | 27.90 | 30.00 | 43 | 77.35 | 76.80 | 79.90 |
| 8 | 28.95 | 29.10 | 31.20 | 44 | 78.95 | 78.40 | 81.50 |
| 9 | 30.20 | 30.35 | 32.45 | 45 | 80.55 | 80.00 | 82.90 |
| 10 | 31.40 | 31.55 | 33.65 | 46 | 81.85 | 81.55 | 84.15 |
| 11 | 32.90 | 33.05 | 35.15 | 47 | 83.25 | 83.20 | 85.60 |
| 12 | 35.30 | 35.45 | 37.55 | 48 | 84.60 | 84.75 | 86.90 |
| 13 | 36.55 | 36.70 | 39.25 | 49 | 85.90 | 86.05 | 88.20 |
| 14 | 37.95 | 38.10 | 40.20 | 50 | 87.20 | 87.35 | 89.50 |
| 15 | 39.15 | 39.30 | 41.40 | 51 | 88.60 | 88.80 | 90.95 |
| 16 | 40.50 | 40.65 | 42.75 | 52 | 89.90 | 90.05 | 92.20 |
| 17 | 41.85 | 42.00 | 44.10 | 53 | 91.30 | 91.45 | 93.60 |
| 18 | 43.10 | 43.25 | 45.35 | 54 | 92.60 | 92.75 | 94.90 |
| 19 | 44.40 | 44.55 | 46.65 | 55 | 93.90 | 94.10 | 96.25 |
| 20 | 45.75 | 45.90 | 48.00 | 56 | 95.35 | 95.50 | 97.65 |
| 21 | 47.00 | 47.20 | 49.25 | 57 | 96.60 | 96.75 | 98.90 |
| 22 | 48.30 | 48.45 | 50.55 | 58 | 97.95 | 98.10 | 100.30 |
| 23 | 49.65 | 49.85 | 51.90 | 59 | 99.45 | 99.60 | 101.75 |
| 24 | 50.90 | 51.05 | 53.15 | 60 | 101.00 | 101.15 | 103.30 |
| 25 | 52.20 | 52.40 | 54.45 | 61 | 102.70 | 102.85 | 105.00 |
| 26 | 53.50 | 53.65 | 55.75 | 62 | 104.25 | 104.40 | 106.60 |
| 27 | 54.85 | 55.00 | 57.05 | 63 | 105.85 | 106.00 | 108.15 |
| 28 | 56.10 | 56.25 | 58.35 | 64 | 107.50 | 107.70 | 109.85 |
| 29 | 57.45 | 57.60 | 59.65 | 65 | 109.10 | 109.25 | 111.40 |
| 30 | 58.75 | 58.90 | 61.00 | 66 | 110.80 | 110.95 | 113.10 |
| 31 | 60.05 | 60.20 | 62.25 | 67 | 112.35 | 112.50 | 114.65 |
| 32 | 61.35 | 61.50 | 63.60 | 68 | 114.05 | 114.20 | 116.35 |
| 33 | 62.65 | 62.80 | 64.85 | 69 | 115.60 | 115.75 | 117.90 |
| 34 | 63.95 | 64.10 | 66.20 | 70 | 117.20 | 117.35 | 119.50 |
| 35 | 65.25 | 65.40 | 67.45 | | | | |

1. Same Day Airport service is currently suspended.
2. The 2-pound rate is charged for matter sent in a flat-rate envelope provided by the USPS, regardless of the actual weight of the piece.

| | |
|---|---|
| **2.0** | **FEES** |
| **Address Correction Service Fee** 2.1 | Manual notice only, each: $0.60. |
| **Pickup Fee** 2.2 | Per occurrence: $10.25. May be combined with Priority Mail and Package Services Parcel Post pickups. |
| **Fee for Delivery Stops** 2.3 | Custom Designed Service only, each: $10.25. |

# R600 Standard Mail

## 1.0 REGULAR STANDARD MAIL

### Letter-Size Minimum Per Piece Rates 1.1

Pieces 3.3 ounces (0.2063 pound) or less:

| | Presorted | | Automation[1] | | |
|---|---|---|---|---|---|
| **Entry Discount** | **Basic** | **3/5** | **Basic** | **3-Digit** | **5-Digit** |
| None | $0.250 | $0.230 | $0.197 | $0.187 | $0.174 |
| DBMC | 0.231 | 0.211 | 0.178 | 0.168 | 0.155 |
| DSCF | 0.226 | 0.206 | 0.173 | 0.163 | 0.150 |
| DDU | — | — | — | — | — |

1. Pieces weighing over 3 ounces subject to additional standards.

### Nonletter Per Piece Rates 1.2

Pieces 3.3 ounces (0.2063 pound) or less:

| | Presorted[1,2] | | Automation | |
|---|---|---|---|---|
| **Entry Discount** | **Basic** | **3/5** | **Basic** | **3/5** |
| None | $0.319 | $0.263 | $0.275 | $0.236 |
| DBMC | 0.300 | 0.244 | 0.256 | 0.217 |
| DSCF | 0.295 | 0.239 | 0.251 | 0.212 |
| DDU | — | — | — | — |

1. The residual shape surcharge of $0.18 per piece applies to items that are prepared as a parcel or are not letter-size or flat-size.
2. Machinable parcels for which the residual shape surcharge is paid may be eligible for the barcoded discount of $0.03 per piece (see E620). The barcoded discount is available for pieces entered at DSCF rates only if sorted to 5-digit sacks or pallets. Except for mail entered at the Phoenix, AZ, ASF, the barcoded discount is not available for DBMC rate mail entered at an ASF.

### Piece and Pound Rates 1.3

Pieces more than 3.3 ounces (0.2063 pound):

| | Presorted[2,3] | | Automation | |
|---|---|---|---|---|
| **Piece/Pound Rate[1]** | **Basic** | **3/5** | **Basic** | **3/5** |
| **Per Piece** | $0.181 | $0.125 | $0.137 | $0.098 |
| **Per Pound** (includes entry discount if applicable) | PLUS | PLUS | PLUS | PLUS |
| None | $0.668 | $0.668 | $0.668 | $0.668 |
| DBMC | 0.575 | 0.575 | 0.575 | 0.575 |
| DSCF | 0.554 | 0.554 | 0.554 | 0.554 |
| DDU | — | — | — | — |

1. Each piece is subject to both a piece rate and a pound rate.
2. Residual shape surcharge of $0.18 per piece applies to items that are prepared as a parcel or are not letter-size or flat-size.
3. Machinable parcels for which the residual shape surcharge is paid may be eligible for the barcoded discount of $0.03 per piece (see E620). The barcoded discount is available for pieces entered at DSCF rates only if sorted to 5-digit sacks or pallets. Except for mail entered at the Phoenix, AZ, ASF, the barcoded discount is not available for DBMC rate mail entered at an ASF.

## 2.0 ENHANCED CARRIER ROUTE STANDARD MAIL

**Letter-Size Minimum Per Piece Rates**
2.1

Pieces 3.3 ounces (0.2063 pound) or less:

| | Nonautomation | | | Automation[1] |
|---|---|---|---|---|
| **Entry Discount** | **Basic** | **High Density** | **Saturation** | **Basic** |
| None | $0.176 | $0.151 | $0.143 | $0.155 |
| DBMC | 0.157 | 0.132 | 0.124 | 0.136 |
| DSCF | 0.152 | 0.127 | 0.119 | 0.131 |
| DDU | 0.147 | 0.122 | 0.114 | 0.126 |

1. Pieces weighing over 3 ounces subject to additional standards.

**Nonletter Per Piece Rates**
2.2

Pieces 3.3 ounces (0.2063 pound) or less:

| Entry Discount | Basic[1] | High Density[1] | Saturation[1] |
|---|---|---|---|
| None | $0.176 | $0.154 | $0.147 |
| DBMC | 0.157 | 0.135 | 0.128 |
| DSCF | 0.152 | 0.130 | 0.123 |
| DDU | 0.147 | 0.125 | 0.118 |

1. Residual shape surcharge of $0.15 per piece applies to items that are prepared as a parcel or are not letter-size or flat-size.

**Piece and Pound Rates**
2.3

Pieces more than 3.3 ounces (0.2063 pound):

| Piece/Pound Rate [1,2] | Basic | High Density | Saturation |
|---|---|---|---|
| **Per Piece** | $0.044 | $0.022 | $0.015 |
| **Per Pound (includes entry discount if applicable)** | PLUS | PLUS | PLUS |
| None | $0.638 | $0.638 | $0.638 |
| DBMC | 0.545 | 0.545 | 0.545 |
| DSCF | 0.524 | 0.524 | 0.524 |
| DDU | 0.498 | 0.498 | 0.498 |

1. Each piece is subject to both a piece rate and a pound rate.
2. Residual shape surcharge of $0.15 per piece applies to items that are prepared as a parcel or are not letter-size or flat-size.

## 3.0 NONPROFIT STANDARD MAIL

**Letter-Size Minimum Per Piece Rates**
3.1

Pieces 3.3 ounces (0.2063 pound) or less:

| | Presorted | | Automation[1] | | |
|---|---|---|---|---|---|
| **Entry Discount** | **Basic** | **3/5** | **Basic** | **3-Digit** | **5-Digit** |
| None | $0.155 | $0.143 | $0.130 | $0.120 | $0.105 |
| DBMC | 0.136 | 0.124 | 0.111 | 0.101 | 0.086 |
| DSCF | 0.131 | 0.119 | 0.106 | 0.096 | 0.081 |
| DDU | — | — | — | — | — |

1. Pieces weighing over 3 ounces subject to additional standards.

**Nonletter-Size Minimum Per Piece Rates**
3.2

Pieces 3.3 ounces (0.2063 pound) or less:

| | Presorted[1,2] | | Automation | |
|---|---|---|---|---|
| **Entry Discount** | **Basic** | **3/5** | **Basic** | **3/5** |
| None | $0.217 | $0.168 | $0.176 | $0.151 |
| DBMC | 0.198 | 0.149 | 0.157 | 0.132 |
| DSCF | 0.193 | 0.144 | 0.152 | 0.127 |
| DDU | — | — | — | — |

1. Residual shape surcharge of $0.18 per piece applies to items that are prepared as a parcel or are not letter-size or flat-size.
2. Machinable parcels for which the residual shape surcharge is paid may be eligible for the barcoded discount of $0.03 per piece (see E620). The barcoded discount is available for pieces entered at DSCF rates only if sorted to 5-digit sacks or pallets. Except for mail entered at the Phoenix, AZ, ASF, the barcoded discount is not available for DBMC rate mail entered at an ASF.

**Piece and Pound Rates**
3.3

Pieces more than 3.3 ounces (0.2063 pound):

| | Presorted[2,3] | | Automation | |
|---|---|---|---|---|
| **Piece/Pound Rate[1]** | **Basic** | **3/5** | **Basic** | **3/5** |
| **Per Piece** | $0.104 | $0.055 | $0.063 | $0.038 |
| **Per Pound** (includes entry discount if applicable) | PLUS | PLUS | PLUS | PLUS |
| None | $0.550 | $0.550 | $0.550 | $0.550 |
| DBMC | 0.457 | 0.457 | 0.457 | 0.457 |
| DSCF | 0.436 | 0.436 | 0.436 | 0.436 |
| DDU | — | — | — | — |

1. Each piece is subject to both a piece rate and a pound rate.
2. Residual shape surcharge of $0.18 per piece applies to items that are prepared as a parcel or are not letter-size or flat-size.
3. Machinable parcels for which the residual shape surcharge is paid may be eligible for the barcoded discount of $0.03 per piece (see E620). The barcoded discount is available for pieces entered at DSCF rates only if sorted to 5-digit sacks or pallets. Except for mail entered at the Phoenix, AZ, ASF, the barcoded discount is not available for DBMC rate mail entered at an ASF.

## 4.0 NONPROFIT ENHANCED CARRIER ROUTE STANDARD MAIL

**Letter-Size Minimum Per Piece Rates**
4.1

Pieces 3.3 ounces (0.2063 pound) or less:

| | Nonautomation | | | Automation[1] |
|---|---|---|---|---|
| **Entry Discount** | **Basic** | **High Density** | **Saturation** | **Basic** |
| None | $0.116 | $0.093 | $0.087 | $0.103 |
| DBMC | 0.097 | 0.074 | 0.068 | 0.084 |
| DSCF | 0.092 | 0.069 | 0.063 | 0.079 |
| DDU | 0.087 | 0.064 | 0.058 | 0.074 |

1. Pieces weighing over 3 ounces subject to additional standards.

**Nonletter-Size Minimum Per Piece Rates**
4.2

Pieces 3.3 ounces (0.2063 pound) or less:

| Entry Discount | Basic[1] | High Density[1] | Saturation[1] |
|---|---|---|---|
| None | $0.116 | $0.100 | $0.095 |
| DBMC | 0.097 | 0.081 | 0.076 |
| DSCF | 0.092 | 0.076 | 0.071 |
| DDU | 0.087 | 0.071 | 0.066 |

1. Residual shape surcharge of $0.15 per piece applies to items that are prepared as a parcel or are not letter-size or flat-size.

**Piece and Pound Rates**
4.3

Pieces more than 3.3 ounces (0.2063 pound):

| Piece/Pound Rate[1,2] | Basic | High Density | Saturation |
|---|---|---|---|
| **Per Piece** | $0.040 | $0.024 | $0.019 |
| **Per Pound (includes entry discount if applicable)** | PLUS | PLUS | PLUS |
| None | $0.370 | $0.370 | $0.370 |
| DBMC | 0.277 | 0.277 | 0.277 |
| DSCF | 0.256 | 0.256 | 0.256 |
| DDU | 0.230 | 0.230 | 0.230 |

1. Each piece is subject to both a piece rate and a pound rate.
2. Residual shape surcharge of $0.15 per piece applies to items that are prepared as a parcel or are not letter-size or flat-size.

**5.0 FEES**

**Mailing Fee**
5.1

Mailing fee, per 12-month period: $125.00.

**Address Correction Service Fees**
5.2

Fees per correction:

a. Manual notice: $0.60.

b. Electronic notice: $0.20.

**Bulk Parcel Return Service Fee**
5.3

See R900.3.0.

**Weighted Fee**

5.4 For return of pieces bearing the ancillary service markings "Address Service Requested" and "Forwarding Service Requested":

| Single-Piece Weight Not Over (ounces) | Weighted Fee per Piece[1] |
|---|---|
| 1 | $0.85 |
| 2 | 1.36 |
| 3 | 1.88 |
| 4 | 2.40 |
| 5 | 2.92 |
| 6 | 3.44 |
| 7 | 3.96 |
| 8 | 4.48 |
| 9 | 5.00 |
| 10 | 5.52 |
| 11 | 6.04 |
| 12 | 6.56 |
| 13 | 7.07 |
| 15.999 | 8.66 |

1. Weighted fee equals single-piece First-Class Mail or Priority Mail rate multiplied by 2.472 (see F010).

## 6.0 RESIDUAL SHAPE SURCHARGE

Items that are prepared as a parcel or are neither letter-size nor flat-size, per piece:

| Rate Category | Surcharge |
|---|---|
| Regular and Nonprofit | $0.18 |
| Enhanced Carrier Route and Nonprofit Enhanced Carrier Route | 0.15 |

## 7.0 BARCODED DISCOUNT

Deduct $0.03 per piece for machinable parcels with a barcode (see E610 and E620 for eligibility).

# R700 Package Services

## 1.0 PACKAGE SERVICES PARCEL POST

**Inter-BMC/ASF Single-Piece Machinable Parcel Post**

1.1 Inter-BMC/ASF ZIP Codes only, no discount, no surcharge:

| Weight Not Over (pounds) | Zone[1, 2, 3, 4, 5, 6] | | | | | | |
|---|---|---|---|---|---|---|---|
| | 1 & 2 | 3 | 4 | 5 | 6 | 7 | 8 |
| 1 | $3.34 | $3.39 | $3.44 | $3.45 | $3.45 | $3.45 | $3.45 |
| 2 | 3.34 | 3.39 | 3.44 | 3.45 | 3.45 | 3.45 | 3.45 |
| 3 | 3.81 | 4.13 | 4.56 | 4.61 | 4.66 | 4.71 | 4.76 |
| 4 | 3.95 | 4.41 | 5.20 | 5.67 | 5.82 | 5.87 | 5.92 |
| 5 | 4.09 | 4.65 | 5.65 | 6.84 | 6.99 | 7.04 | 7.09 |
| 6 | 4.23 | 4.90 | 6.05 | 7.53 | 7.84 | 8.06 | 8.64 |
| 7 | 4.36 | 5.11 | 6.43 | 8.18 | 8.85 | 9.28 | 10.44 |
| 8 | 4.49 | 5.31 | 6.76 | 8.76 | 9.60 | 10.49 | 12.24 |
| 9 | 4.59 | 5.50 | 7.11 | 9.29 | 10.30 | 11.71 | 14.05 |
| 10 | 4.72 | 5.68 | 7.41 | 9.78 | 11.00 | 12.93 | 15.19 |
| 11 | 4.81 | 5.86 | 7.71 | 10.24 | 11.70 | 14.10 | 16.07 |
| 12 | 4.92 | 6.02 | 7.98 | 10.66 | 12.40 | 15.15 | 16.91 |
| 13 | 5.01 | 6.16 | 8.24 | 11.07 | 13.10 | 16.08 | 17.72 |
| 14 | 5.11 | 6.33 | 8.49 | 11.45 | 13.66 | 16.68 | 18.49 |
| 15 | 5.19 | 6.47 | 8.73 | 11.80 | 14.11 | 17.26 | 19.24 |
| 16 | 5.28 | 6.60 | 8.96 | 12.14 | 14.52 | 17.78 | 19.97 |
| 17 | 5.37 | 6.72 | 9.18 | 12.44 | 14.92 | 18.29 | 20.67 |
| 18 | 5.45 | 6.85 | 9.38 | 12.74 | 15.29 | 18.75 | 21.34 |
| 19 | 5.54 | 6.97 | 9.58 | 13.03 | 15.65 | 19.21 | 22.00 |
| 20 | 5.61 | 7.08 | 9.75 | 13.29 | 15.97 | 19.63 | 22.64 |
| 21 | 5.68 | 7.21 | 9.93 | 13.56 | 16.30 | 20.03 | 23.26 |
| 22 | 5.76 | 7.30 | 10.11 | 13.80 | 16.60 | 20.42 | 23.87 |
| 23 | 5.83 | 7.43 | 10.29 | 14.02 | 16.89 | 20.78 | 24.46 |
| 24 | 5.88 | 7.53 | 10.44 | 14.26 | 17.16 | 21.14 | 25.03 |
| 25 | 5.96 | 7.62 | 10.61 | 14.46 | 17.43 | 21.45 | 25.59 |
| 26 | 6.02 | 7.72 | 10.76 | 14.67 | 17.68 | 21.77 | 26.14 |
| 27 | 6.10 | 7.81 | 10.90 | 14.86 | 17.91 | 22.07 | 26.68 |
| 28 | 6.15 | 7.91 | 11.06 | 15.05 | 18.15 | 22.36 | 27.20 |
| 29 | 6.21 | 8.00 | 11.19 | 15.22 | 18.37 | 22.63 | 27.71 |
| 30 | 6.28 | 8.09 | 11.31 | 15.39 | 18.57 | 22.90 | 28.21 |
| 31 | 6.34 | 8.16 | 11.45 | 15.55 | 18.78 | 23.16 | 28.70 |
| 32 | 6.39 | 8.26 | 11.58 | 15.71 | 18.97 | 23.40 | 29.18 |
| 33 | 6.44 | 8.34 | 11.70 | 15.87 | 19.15 | 23.64 | 29.65 |
| 34 | 6.51 | 8.41 | 11.81 | 16.02 | 19.33 | 23.86 | 30.11 |
| 35 | 6.56 | 8.49 | 11.94 | 16.15 | 19.50 | 24.07 | 30.57 |

1. For barcoded discount, deduct $0.03 per parcel (machinable parcels only, 50-piece minimum).
2. For OBMC Presort discount, deduct $0.90 per parcel.
3. For BMC Presort discount, deduct $0.23 per parcel.
4. Parcels that weigh less than 15 pounds but measure more than 84 inches (but not more than 108 inches) in combined length and girth are charged the applicable rate for a 15-pound parcel.
5. For parcels that weigh more than 35 pounds, see 1.2.
6. Regardless of weight, a parcel that meets any of the criteria in E711.2.3 must pay the rate for a nonmachinable parcel in 1.2.

### 1.2 Inter-BMC/ASF Single-Piece Nonmachinable Parcel Post

Rates shown include the $2.00 nonmachinable surcharge. The nonmachinable surcharge does not apply to parcels mailed at oversized rates or parcels sent with special handling. Regardless of weight, a parcel that meets any of the criteria in E711.2.3 must pay the rate listed in this table.

| Weight Not Over (pounds) | Zone[1, 2, 3, 4] | | | | | | |
|---|---|---|---|---|---|---|---|
| | 1 & 2 | 3 | 4 | 5 | 6 | 7 | 8 |
| 1 | $5.34 | $5.39 | $5.44 | $5.45 | $5.45 | $5.45 | $5.45 |
| 2 | 5.34 | 5.39 | 5.44 | 5.45 | 5.45 | 5.45 | 5.45 |
| 3 | 5.81 | 6.13 | 6.56 | 6.61 | 6.66 | 6.71 | 6.76 |
| 4 | 5.95 | 6.41 | 7.20 | 7.67 | 7.82 | 7.87 | 7.92 |
| 5 | 6.09 | 6.65 | 7.65 | 8.84 | 8.99 | 9.04 | 9.09 |
| 6 | 6.23 | 6.90 | 8.05 | 9.53 | 9.84 | 10.06 | 10.64 |
| 7 | 6.36 | 7.11 | 8.43 | 10.18 | 10.85 | 11.28 | 12.44 |
| 8 | 6.49 | 7.31 | 8.76 | 10.76 | 11.60 | 12.49 | 14.24 |
| 9 | 6.59 | 7.50 | 9.11 | 11.29 | 12.30 | 13.71 | 16.05 |
| 10 | 6.72 | 7.68 | 9.41 | 11.78 | 13.00 | 14.93 | 17.19 |
| 11 | 6.81 | 7.86 | 9.71 | 12.24 | 13.70 | 16.10 | 18.07 |
| 12 | 6.92 | 8.02 | 9.98 | 12.66 | 14.40 | 17.15 | 18.91 |
| 13 | 7.01 | 8.16 | 10.24 | 13.07 | 15.10 | 18.08 | 19.72 |
| 14 | 7.11 | 8.33 | 10.49 | 13.45 | 15.66 | 18.68 | 20.49 |
| 15 | 7.19 | 8.47 | 10.73 | 13.80 | 16.11 | 19.26 | 21.24 |
| 16 | 7.28 | 8.60 | 10.96 | 14.14 | 16.52 | 19.78 | 21.97 |
| 17 | 7.37 | 8.72 | 11.18 | 14.44 | 16.92 | 20.29 | 22.67 |
| 18 | 7.45 | 8.85 | 11.38 | 14.74 | 17.29 | 20.75 | 23.34 |
| 19 | 7.54 | 8.97 | 11.58 | 15.03 | 17.65 | 21.21 | 24.00 |
| 20 | 7.61 | 9.08 | 11.75 | 15.29 | 17.97 | 21.63 | 24.64 |
| 21 | 7.68 | 9.21 | 11.93 | 15.56 | 18.30 | 22.03 | 25.26 |
| 22 | 7.76 | 9.30 | 12.11 | 15.80 | 18.60 | 22.42 | 25.87 |
| 23 | 7.83 | 9.43 | 12.29 | 16.02 | 18.89 | 22.78 | 26.46 |
| 24 | 7.88 | 9.53 | 12.44 | 16.26 | 19.16 | 23.14 | 27.03 |
| 25 | 7.96 | 9.62 | 12.61 | 16.46 | 19.43 | 23.45 | 27.59 |
| 26 | 8.02 | 9.72 | 12.76 | 16.67 | 19.68 | 23.77 | 28.14 |
| 27 | 8.10 | 9.81 | 12.90 | 16.86 | 19.91 | 24.07 | 28.68 |
| 28 | 8.15 | 9.91 | 13.06 | 17.05 | 20.15 | 24.36 | 29.20 |
| 29 | 8.21 | 10.00 | 13.19 | 17.22 | 20.37 | 24.63 | 29.71 |
| 30 | 8.28 | 10.09 | 13.31 | 17.39 | 20.57 | 24.90 | 30.21 |
| 31 | 8.34 | 10.16 | 13.45 | 17.55 | 20.78 | 25.16 | 30.70 |
| 32 | 8.39 | 10.26 | 13.58 | 17.71 | 20.97 | 25.40 | 31.18 |
| 33 | 8.44 | 10.34 | 13.70 | 17.87 | 21.15 | 25.64 | 31.65 |
| 34 | 8.51 | 10.41 | 13.81 | 18.02 | 21.33 | 25.86 | 32.11 |
| 35 | 8.56 | 10.49 | 13.94 | 18.15 | 21.50 | 26.07 | 32.57 |
| 36 | 8.61 | 10.55 | 14.06 | 18.29 | 21.67 | 26.27 | 33.01 |
| 37 | 8.67 | 10.63 | 14.16 | 18.43 | 21.83 | 26.49 | 33.45 |
| 38 | 8.72 | 10.71 | 14.27 | 18.55 | 21.98 | 26.67 | 33.88 |
| 39 | 8.78 | 10.78 | 14.37 | 18.66 | 22.13 | 26.85 | 34.30 |
| 40 | 8.83 | 10.85 | 14.48 | 18.79 | 22.28 | 27.04 | 34.71 |
| 41 | 8.89 | 10.93 | 14.57 | 18.91 | 22.42 | 27.21 | 35.11 |
| 42 | 8.93 | 10.99 | 14.67 | 19.01 | 22.54 | 27.37 | 35.34 |
| 43 | 8.97 | 11.05 | 14.77 | 19.12 | 22.68 | 27.52 | 35.54 |
| 44 | 9.03 | 11.11 | 14.86 | 19.21 | 22.80 | 27.67 | 35.75 |
| 45 | 9.07 | 11.18 | 14.95 | 19.32 | 22.92 | 27.82 | 35.94 |
| 46 | 9.12 | 11.24 | 15.04 | 19.43 | 23.04 | 27.97 | 36.12 |
| 47 | 9.18 | 11.31 | 15.12 | 19.51 | 23.16 | 28.11 | 36.31 |
| 48 | 9.22 | 11.37 | 15.22 | 19.61 | 23.25 | 28.24 | 36.48 |
| 49 | 9.26 | 11.42 | 15.30 | 19.69 | 23.37 | 28.37 | 36.64 |
| 50 | 9.30 | 11.48 | 15.37 | 19.78 | 23.48 | 28.50 | 36.81 |
| 51 | 9.36 | 11.54 | 15.46 | 19.86 | 23.57 | 28.62 | 36.96 |
| 52 | 9.40 | 11.60 | 15.54 | 19.95 | 23.67 | 28.73 | 37.11 |
| 53 | 9.44 | 11.66 | 15.60 | 20.02 | 23.76 | 28.85 | 37.27 |
| 54 | 9.48 | 11.72 | 15.68 | 20.10 | 23.86 | 28.97 | 37.40 |
| 55 | 9.53 | 11.75 | 15.77 | 20.17 | 23.93 | 29.06 | 37.54 |
| 56 | 9.58 | 11.83 | 15.83 | 20.25 | 24.03 | 29.17 | 37.68 |
| 57 | 9.62 | 11.88 | 15.91 | 20.32 | 24.11 | 29.27 | 37.80 |
| 58 | 9.66 | 11.92 | 15.97 | 20.39 | 24.19 | 29.37 | 37.92 |
| 59 | 9.71 | 11.97 | 16.05 | 20.45 | 24.27 | 29.45 | 38.04 |
| 60 | 9.75 | 12.03 | 16.13 | 20.52 | 24.33 | 29.55 | 38.17 |
| 61 | 9.80 | 12.09 | 16.18 | 20.58 | 24.42 | 29.64 | 38.33 |
| 62 | 9.84 | 12.13 | 16.25 | 20.65 | 24.48 | 29.72 | 38.47 |
| 63 | 9.87 | 12.19 | 16.32 | 20.70 | 24.56 | 29.80 | 38.62 |
| 64 | 9.91 | 12.23 | 16.38 | 20.75 | 24.62 | 29.88 | 38.76 |
| 65 | 9.95 | 12.28 | 16.44 | 20.82 | 24.69 | 29.96 | 38.90 |
| 66 | 10.00 | 12.34 | 16.50 | 20.87 | 24.75 | 30.04 | 39.03 |
| 67 | 10.05 | 12.38 | 16.56 | 20.93 | 24.82 | 30.11 | 39.16 |
| 68 | 10.08 | 12.42 | 16.64 | 20.98 | 24.87 | 30.19 | 39.30 |
| 69 | 10.12 | 12.46 | 16.69 | 21.03 | 24.94 | 30.26 | 39.41 |
| 70 | 10.16 | 12.53 | 16.76 | 21.09 | 24.99 | 30.32 | 39.55 |
| Oversized | 34.75 | 38.94 | 45.10 | 54.87 | 66.41 | 82.14 | 106.00 |

1. For OBMC Presort discount, deduct $0.90 per parcel.
2. For BMC Presort discount, deduct $0.23 per parcel.
3. Parcels that weigh less than 15 pounds but measure more than 84 inches (but not more than 108 inches) in combined length and girth are charged the applicable rate for a 15-pound parcel.
4. Regardless of weight, a parcel that measures more than 108 inches (but not more than 130 inches) in combined length and girth must pay the oversized rate.

**Local and Intra-BMC/ASF Single-Piece Machinable Parcel Post**

1.3

| Weight Not Over (pounds) | Zone[1, 2, 3, 4] | | | | |
|---|---|---|---|---|---|
| | Local | 1 & 2 | 3 | 4 | 5 |
| 1 | $2.72 | $2.97 | $2.97 | $2.97 | $2.97 |
| 2 | 2.72 | 2.97 | 2.97 | 2.97 | 2.97 |
| 3 | 2.96 | 3.36 | 3.46 | 3.46 | 3.46 |
| 4 | 3.18 | 3.52 | 3.78 | 3.79 | 3.93 |
| 5 | 3.38 | 3.66 | 4.08 | 4.11 | 4.40 |
| 6 | 3.48 | 3.79 | 4.38 | 4.40 | 4.83 |
| 7 | 3.55 | 3.91 | 4.63 | 4.66 | 5.23 |
| 8 | 3.64 | 4.05 | 4.87 | 4.91 | 5.61 |
| 9 | 3.71 | 4.14 | 5.06 | 5.15 | 5.96 |
| 10 | 3.79 | 4.27 | 5.31 | 5.38 | 6.29 |
| 11 | 3.86 | 4.37 | 5.49 | 5.59 | 6.59 |
| 12 | 3.93 | 4.48 | 5.65 | 5.80 | 6.90 |
| 13 | 4.01 | 4.58 | 5.79 | 5.99 | 7.16 |
| 14 | 4.07 | 4.67 | 5.88 | 6.18 | 7.43 |
| 15 | 4.13 | 4.76 | 6.02 | 6.35 | 7.68 |
| 16 | 4.21 | 4.83 | 6.16 | 6.52 | 7.91 |
| 17 | 4.26 | 4.93 | 6.29 | 6.69 | 8.13 |
| 18 | 4.31 | 5.00 | 6.41 | 6.84 | 8.36 |
| 19 | 4.37 | 5.10 | 6.53 | 6.99 | 8.56 |
| 20 | 4.44 | 5.17 | 6.65 | 7.14 | 8.75 |
| 21 | 4.48 | 5.24 | 6.76 | 7.28 | 8.94 |
| 22 | 4.54 | 5.32 | 6.86 | 7.42 | 9.12 |
| 23 | 4.59 | 5.38 | 6.99 | 7.56 | 9.30 |
| 24 | 4.64 | 5.45 | 7.08 | 7.67 | 9.46 |
| 25 | 4.70 | 5.51 | 7.18 | 7.79 | 9.62 |
| 26 | 4.74 | 5.59 | 7.27 | 7.89 | 9.78 |
| 27 | 4.79 | 5.65 | 7.38 | 7.98 | 9.92 |
| 28 | 4.83 | 5.70 | 7.47 | 8.07 | 10.06 |
| 29 | 4.90 | 5.78 | 7.57 | 8.15 | 10.20 |
| 30 | 4.95 | 5.83 | 7.65 | 8.23 | 10.35 |
| 31 | 4.99 | 5.89 | 7.72 | 8.30 | 10.47 |
| 32 | 5.04 | 5.96 | 7.81 | 8.38 | 10.59 |
| 33 | 5.09 | 6.01 | 7.90 | 8.45 | 10.73 |
| 34 | 5.13 | 6.06 | 7.96 | 8.51 | 10.83 |
| 35 | 5.17 | 6.12 | 8.05 | 8.58 | 10.94 |

1. For barcoded discount, deduct $0.03 per parcel (machinable parcels only, 50-piece minimum).
2. Parcels that weigh less than 15 pounds but measure more than 84 inches (but not more than 108 inches) in combined length and girth are charged the applicable rate for a 15-pound parcel.
3. For parcels that weigh more than 35 pounds, see 1.4.
4. Regardless of weight, a parcel that meets any of the criteria in E711.2.3 must pay the rate for a nonmachinable parcel in 1.4.

**Local and Intra-BMC/ASF Single-Piece Nonmachinable Parcel Post**

1.4 Rates shown include the $1.35 nonmachinable surcharge. The nonmachinable surcharge does not apply to parcels mailed at oversized rates or parcels sent with special handling. Regardless of weight, a parcel that meets any of the criteria in E711.2.3 must pay the rate listed in this table.

| Weight Not Over (pounds) | Zone[1,2] | | | | |
|---|---|---|---|---|---|
| | Local | 1&2 | 3 | 4 | 5 |
| 1 | $4.07 | $4.32 | $4.32 | $4.32 | $4.32 |
| 2 | 4.07 | 4.32 | 4.32 | 4.32 | 4.32 |
| 3 | 4.31 | 4.71 | 4.81 | 4.81 | 4.81 |
| 4 | 4.53 | 4.87 | 5.13 | 5.14 | 5.28 |
| 5 | 4.73 | 5.01 | 5.43 | 5.46 | 5.75 |
| 6 | 4.83 | 5.14 | 5.73 | 5.75 | 6.18 |
| 7 | 4.90 | 5.26 | 5.98 | 6.01 | 6.58 |
| 8 | 4.99 | 5.40 | 6.22 | 6.26 | 6.96 |
| 9 | 5.06 | 5.49 | 6.41 | 6.50 | 7.31 |
| 10 | 5.14 | 5.62 | 6.66 | 6.73 | 7.64 |
| 11 | 5.21 | 5.72 | 6.84 | 6.94 | 7.94 |
| 12 | 5.28 | 5.83 | 7.00 | 7.15 | 8.25 |
| 13 | 5.36 | 5.93 | 7.14 | 7.34 | 8.51 |
| 14 | 5.42 | 6.02 | 7.23 | 7.53 | 8.78 |
| 15 | 5.48 | 6.11 | 7.37 | 7.70 | 9.03 |
| 16 | 5.56 | 6.18 | 7.51 | 7.87 | 9.26 |
| 17 | 5.61 | 6.28 | 7.64 | 8.04 | 9.48 |
| 18 | 5.66 | 6.35 | 7.76 | 8.19 | 9.71 |
| 19 | 5.72 | 6.45 | 7.88 | 8.34 | 9.91 |
| 20 | 5.79 | 6.52 | 8.00 | 8.49 | 10.10 |
| 21 | 5.83 | 6.59 | 8.11 | 8.63 | 10.29 |
| 22 | 5.89 | 6.67 | 8.21 | 8.77 | 10.47 |
| 23 | 5.94 | 6.73 | 8.34 | 8.91 | 10.65 |
| 24 | 5.99 | 6.80 | 8.43 | 9.02 | 10.81 |
| 25 | 6.05 | 6.86 | 8.53 | 9.14 | 10.97 |
| 26 | 6.09 | 6.94 | 8.62 | 9.24 | 11.13 |
| 27 | 6.14 | 7.00 | 8.73 | 9.33 | 11.27 |
| 28 | 6.18 | 7.05 | 8.82 | 9.42 | 11.41 |
| 29 | 6.25 | 7.13 | 8.92 | 9.50 | 11.55 |
| 30 | 6.30 | 7.18 | 9.00 | 9.58 | 11.70 |
| 31 | 6.34 | 7.24 | 9.07 | 9.65 | 11.82 |
| 32 | 6.39 | 7.31 | 9.16 | 9.73 | 11.94 |
| 33 | 6.44 | 7.36 | 9.25 | 9.80 | 12.08 |
| 34 | 6.48 | 7.41 | 9.31 | 9.86 | 12.18 |
| 35 | 6.52 | 7.47 | 9.40 | 9.93 | 12.29 |
| 36 | 6.55 | 7.52 | 9.47 | 9.99 | 12.42 |
| 37 | 6.60 | 7.58 | 9.53 | 10.05 | 12.52 |
| 38 | 6.64 | 7.64 | 9.62 | 10.11 | 12.63 |
| 39 | 6.69 | 7.69 | 9.69 | 10.16 | 12.72 |
| 40 | 6.73 | 7.73 | 9.76 | 10.21 | 12.83 |
| 41 | 6.78 | 7.79 | 9.84 | 10.26 | 12.92 |
| 42 | 6.82 | 7.84 | 9.89 | 10.31 | 13.01 |
| 43 | 6.86 | 7.88 | 9.97 | 10.45 | 13.11 |
| 44 | 6.92 | 7.93 | 10.02 | 10.49 | 13.19 |
| 45 | 6.95 | 7.98 | 10.08 | 10.54 | 13.28 |
| 46 | 6.99 | 8.04 | 10.16 | 10.58 | 13.36 |
| 47 | 7.03 | 8.09 | 10.21 | 10.62 | 13.44 |
| 48 | 7.07 | 8.13 | 10.28 | 10.66 | 13.54 |
| 49 | 7.11 | 8.18 | 10.34 | 10.70 | 13.61 |
| 50 | 7.15 | 8.21 | 10.39 | 10.73 | 13.69 |
| 51 | 7.19 | 8.27 | 10.44 | 10.77 | 13.76 |
| 52 | 7.22 | 8.31 | 10.52 | 10.80 | 13.83 |
| 53 | 7.26 | 8.35 | 10.57 | 10.83 | 13.90 |
| 54 | 7.31 | 8.39 | 10.63 | 10.86 | 13.98 |
| 55 | 7.35 | 8.43 | 10.67 | 10.89 | 14.04 |
| 56 | 7.38 | 8.48 | 10.73 | 10.92 | 14.10 |
| 57 | 7.41 | 8.53 | 10.79 | 10.96 | 14.18 |
| 58 | 7.46 | 8.57 | 10.83 | 10.99 | 14.24 |
| 59 | 7.50 | 8.61 | 10.89 | 11.01 | 14.30 |
| 60 | 7.52 | 8.65 | 10.94 | 11.05 | 14.37 |
| 61 | 7.58 | 8.71 | 10.96 | 11.11 | 14.43 |
| 62 | 7.60 | 8.75 | 10.99 | 11.16 | 14.48 |
| 63 | 7.65 | 8.78 | 11.01 | 11.22 | 14.54 |
| 64 | 7.68 | 8.82 | 11.03 | 11.26 | 14.60 |
| 65 | 7.72 | 8.87 | 11.05 | 11.31 | 14.65 |
| 66 | 7.74 | 8.92 | 11.07 | 11.37 | 14.72 |
| 67 | 7.79 | 8.96 | 11.09 | 11.42 | 14.76 |
| 68 | 7.83 | 8.98 | 11.11 | 11.46 | 14.81 |
| 69 | 7.87 | 9.02 | 11.13 | 11.51 | 14.87 |
| 70 | 7.90 | 9.07 | 11.15 | 11.56 | 14.92 |
| Oversized | 19.82 | 28.99 | 28.99 | 28.99 | 28.99 |

1. Parcels that weigh less than 15 pounds but measure more than 84 inches (but not more than 108 inches) in combined length and girth are charged the applicable rate for a 15-pound parcel.
2. Regardless of weight, a parcel that measures more than 108 inches (but not more than 130 inches) in combined length and girth must pay the oversized rate.

**Parcel Select — DBMC**

1.5 Destination facility ZIP Codes only:

| Weight Not Over (pounds) | Zone[1, 2, 3, 4] | | | |
|---|---|---|---|---|
| | 1 & 2 | 3 | 4 | 5 |
| 1 | $2.10 | $2.45 | $2.73 | $2.92 |
| 2 | 2.10 | 2.45 | 2.73 | 2.92 |
| 3 | 2.33 | 2.85 | 3.27 | 3.41 |
| 4 | 2.54 | 3.23 | 3.74 | 3.88 |
| 5 | 2.74 | 3.59 | 4.06 | 4.35 |
| 6 | 2.92 | 3.92 | 4.35 | 4.78 |
| 7 | 3.10 | 4.24 | 4.61 | 5.18 |
| 8 | 3.27 | 4.54 | 4.86 | 5.56 |
| 9 | 3.42 | 4.82 | 5.10 | 5.91 |
| 10 | 3.57 | 5.09 | 5.33 | 6.24 |
| 11 | 3.72 | 5.35 | 5.54 | 6.54 |
| 12 | 3.86 | 5.60 | 5.75 | 6.85 |
| 13 | 3.99 | 5.74 | 5.94 | 7.11 |
| 14 | 4.11 | 5.83 | 6.13 | 7.38 |
| 15 | 4.24 | 5.97 | 6.30 | 7.63 |
| 16 | 4.35 | 6.11 | 6.47 | 7.86 |
| 17 | 4.47 | 6.24 | 6.64 | 8.08 |
| 18 | 4.58 | 6.36 | 6.79 | 8.31 |
| 19 | 4.68 | 6.48 | 6.94 | 8.51 |
| 20 | 4.78 | 6.60 | 7.09 | 8.70 |
| 21 | 4.88 | 6.71 | 7.23 | 8.89 |
| 22 | 4.98 | 6.81 | 7.37 | 9.07 |
| 23 | 5.07 | 6.94 | 7.51 | 9.25 |
| 24 | 5.16 | 7.03 | 7.62 | 9.41 |
| 25 | 5.25 | 7.13 | 7.74 | 9.57 |
| 26 | 5.34 | 7.22 | 7.84 | 9.73 |
| 27 | 5.42 | 7.33 | 7.93 | 9.87 |
| 28 | 5.50 | 7.42 | 8.02 | 10.01 |
| 29 | 5.58 | 7.52 | 8.10 | 10.15 |
| 30 | 5.66 | 7.60 | 8.18 | 10.30 |
| 31 | 5.73 | 7.67 | 8.25 | 10.42 |
| 32 | 5.81 | 7.76 | 8.33 | 10.54 |
| 33 | 5.88 | 7.85 | 8.40 | 10.68 |
| 34 | 5.95 | 7.91 | 8.46 | 10.78 |
| 35 | 6.02 | 8.00 | 8.53 | 10.89 |
| 36 | 6.08 | 8.07 | 8.59 | 11.02 |
| 37 | 6.15 | 8.13 | 8.65 | 11.12 |
| 38 | 6.21 | 8.22 | 8.71 | 11.23 |
| 39 | 6.27 | 8.29 | 8.76 | 11.32 |
| 40 | 6.33 | 8.36 | 8.81 | 11.43 |
| 41 | 6.39 | 8.44 | 8.86 | 11.52 |
| 42 | 6.44 | 8.49 | 8.91 | 11.61 |
| 43 | 6.48 | 8.57 | 9.05 | 11.71 |
| 44 | 6.53 | 8.62 | 9.09 | 11.79 |
| 45 | 6.58 | 8.68 | 9.14 | 11.88 |
| 46 | 6.64 | 8.76 | 9.18 | 11.96 |
| 47 | 6.69 | 8.81 | 9.22 | 12.04 |
| 48 | 6.73 | 8.88 | 9.26 | 12.14 |
| 49 | 6.78 | 8.94 | 9.30 | 12.21 |
| 50 | 6.81 | 8.99 | 9.33 | 12.29 |
| 51 | 6.87 | 9.04 | 9.37 | 12.36 |
| 52 | 6.91 | 9.12 | 9.40 | 12.43 |
| 53 | 6.95 | 9.17 | 9.43 | 12.50 |
| 54 | 6.99 | 9.23 | 9.46 | 12.58 |
| 55 | 7.03 | 9.27 | 9.49 | 12.64 |
| 56 | 7.08 | 9.33 | 9.52 | 12.70 |
| 57 | 7.13 | 9.39 | 9.56 | 12.78 |
| 58 | 7.17 | 9.43 | 9.59 | 12.84 |
| 59 | 7.21 | 9.49 | 9.61 | 12.90 |
| 60 | 7.25 | 9.54 | 9.65 | 12.97 |
| 61 | 7.31 | 9.56 | 9.71 | 13.03 |
| 62 | 7.35 | 9.59 | 9.76 | 13.08 |
| 63 | 7.38 | 9.61 | 9.82 | 13.14 |
| 64 | 7.42 | 9.63 | 9.86 | 13.20 |
| 65 | 7.47 | 9.65 | 9.91 | 13.25 |
| 66 | 7.52 | 9.67 | 9.97 | 13.32 |
| 67 | 7.56 | 9.69 | 10.02 | 13.36 |
| 68 | 7.58 | 9.71 | 10.06 | 13.41 |
| 69 | 7.62 | 9.73 | 10.11 | 13.47 |
| 70 | 7.67 | 9.75 | 10.16 | 13.52 |
| Oversized | 18.65 | 20.61 | 27.84 | 28.94 |

1. For barcoded discount, deduct $0.03 per parcel (machinable parcels only). Except for mail entered at the Phoenix, AZ, ASF, the barcoded discount is not available for DBMC mail entered at an ASF.
2. Parcels that weigh less than 15 pounds but measure more than 84 inches (but not more than 108 inches) in combined length and girth are charged the applicable rate for a 15-pound parcel.
3. Regardless of weight, a parcel that measures more than 108 inches (but not more than 130 inches) in combined length and girth must pay the oversized rate.
4. For nonmachinable Parcel Select DBMC parcels, add $1.45 per parcel. Any parcel that weighs more than 35 pounds or that meets any of the criteria in E711.2.3 must pay the nonmachinable surcharge. The nonmachinable surcharge does not apply to parcels mailed at oversized rates or parcels sent with special handling.

**Parcel Select—DSCF**

1.6 Destination facility ZIP Codes only:

| Weight Not Over (pounds) | DSCF[1,2] |
|---|---|
| 1 | $1.68 |
| 2 | 1.68 |
| 3 | 1.80 |
| 4 | 1.91 |
| 5 | 2.01 |
| 6 | 2.10 |
| 7 | 2.19 |
| 8 | 2.27 |
| 9 | 2.35 |
| 10 | 2.43 |
| 11 | 2.50 |
| 12 | 2.57 |
| 13 | 2.63 |
| 14 | 2.69 |
| 15 | 2.76 |
| 16 | 2.81 |
| 17 | 2.87 |
| 18 | 2.93 |
| 19 | 2.98 |
| 20 | 3.03 |
| 21 | 3.08 |
| 22 | 3.13 |
| 23 | 3.18 |
| 24 | 3.23 |
| 25 | 3.27 |
| 26 | 3.32 |
| 27 | 3.36 |
| 28 | 3.40 |
| 29 | 3.44 |
| 30 | 3.49 |
| 31 | 3.52 |

| Weight Not Over (pounds) | DSCF[1,2] |
|---|---|
| 32 | 3.56 |
| 33 | 3.60 |
| 34 | 3.64 |
| 35 | 3.68 |
| 36 | 3.71 |
| 37 | 3.75 |
| 38 | 3.78 |
| 39 | 3.82 |
| 40 | 3.85 |
| 41 | 3.88 |
| 42 | 3.92 |
| 43 | 3.95 |
| 44 | 3.98 |
| 45 | 4.01 |
| 46 | 4.04 |
| 47 | 4.07 |
| 48 | 4.10 |
| 49 | 4.13 |
| 50 | 4.16 |
| 51 | 4.19 |
| 52 | 4.22 |
| 53 | 4.24 |
| 54 | 4.27 |
| 55 | 4.30 |
| 56 | 4.32 |
| 57 | 4.35 |
| 58 | 4.38 |
| 59 | 4.40 |
| 60 | 4.43 |
| 61 | 4.45 |
| 62 | 4.48 |

| Weight Not Over (pounds) | DSCF[1,2] |
|---|---|
| 63 | 4.50 |
| 64 | 4.52 |
| 65 | 4.55 |
| 66 | 4.57 |
| 67 | 4.59 |
| 68 | 4.62 |
| 69 | 4.64 |
| 70 | 4.66 |
| Oversized | 11.61 |

1. Parcels that weigh less than 15 pounds but measure more than 84 inches (but not more than 108 inches) in combined length and girth are charged the applicable rate for a 15-pound parcel.
2. Regardless of weight, a parcel that measures more than 108 inches (but not more than 130 inches) in combined length and girth must pay the oversized rate.

**Parcel Select—DDU**

1.7 Destination facility ZIP Codes only:

| Weight Not Over (pounds) | DDU[1,2] |
|---|---|
| 1 | $1.25 |
| 2 | 1.25 |
| 3 | 1.30 |
| 4 | 1.34 |
| 5 | 1.38 |
| 6 | 1.42 |
| 7 | 1.45 |
| 8 | 1.48 |
| 9 | 1.51 |
| 10 | 1.54 |
| 11 | 1.57 |
| 12 | 1.59 |
| 13 | 1.61 |
| 14 | 1.63 |
| 15 | 1.65 |
| 16 | 1.67 |
| 17 | 1.69 |
| 18 | 1.70 |
| 19 | 1.72 |
| 20 | 1.73 |
| 21 | 1.75 |
| 22 | 1.76 |
| 23 | 1.77 |
| 24 | 1.79 |
| 25 | 1.80 |
| 26 | 1.81 |
| 27 | 1.82 |
| 28 | 1.83 |
| 29 | 1.84 |
| 30 | 1.85 |

| Weight Not Over (pounds) | DDU[1,2] |
|---|---|
| 31 | 1.86 |
| 32 | 1.87 |
| 33 | 1.88 |
| 34 | 1.89 |
| 35 | 1.90 |
| 36 | 1.91 |
| 37 | 1.92 |
| 38 | 1.93 |
| 39 | 1.94 |
| 40 | 1.95 |
| 41 | 1.96 |
| 42 | 1.97 |
| 43 | 1.98 |
| 44 | 1.99 |
| 45 | 2.00 |
| 46 | 2.01 |
| 47 | 2.02 |
| 48 | 2.03 |
| 49 | 2.04 |
| 50 | 2.05 |
| 51 | 2.06 |
| 52 | 2.07 |
| 53 | 2.08 |
| 54 | 2.09 |
| 55 | 2.10 |
| 56 | 2.11 |
| 57 | 2.12 |
| 58 | 2.13 |
| 59 | 2.14 |
| 60 | 2.15 |

| Weight Not Over (pounds) | DDU[1,2] |
|---|---|
| 61 | 2.16 |
| 62 | 2.17 |
| 63 | 2.18 |
| 64 | 2.19 |
| 65 | 2.20 |
| 66 | 2.21 |
| 67 | 2.22 |
| 68 | 2.23 |
| 69 | 2.24 |
| 70 | 2.25 |
| Oversized | 7.53 |

1. Parcels that weigh less than 15 pounds but measure more than 84 inches (but not more than 108 inches) in combined length and girth are charged the applicable rate for a 15-pound parcel.
2. Regardless of weight, a parcel that measures more than 108 inches (but not more than 130 inches) in combined length and girth must pay the oversized rate.

## 2.0 BOUND PRINTED MATTER

**Single-Piece Rates**
2.1

Single-Piece Bound Printed Matter Rate:

| Weight Not Over (pounds) | Zone[1] | | | | | | |
|---|---|---|---|---|---|---|---|
| | Local, 1 & 2 | 3 | 4 | 5 | 6 | 7 | 8 |
| 1.0 | $1.73 | $1.76 | $1.79 | $1.85 | $1.90 | $1.97 | $2.10 |
| 1.5 | 1.73 | 1.76 | 1.79 | 1.85 | 1.90 | 1.97 | 2.10 |
| 2.0 | 1.77 | 1.81 | 1.86 | 1.93 | 2.01 | 2.10 | 2.27 |
| 2.5 | 1.82 | 1.87 | 1.92 | 2.02 | 2.11 | 2.22 | 2.44 |
| 3.0 | 1.87 | 1.92 | 1.99 | 2.10 | 2.22 | 2.35 | 2.61 |
| 3.5 | 1.91 | 1.98 | 2.06 | 2.19 | 2.32 | 2.48 | 2.78 |
| 4.0 | 1.96 | 2.03 | 2.12 | 2.27 | 2.43 | 2.60 | 2.95 |
| 4.5 | 2.00 | 2.09 | 2.19 | 2.36 | 2.53 | 2.73 | 3.12 |
| 5.0 | 2.05 | 2.14 | 2.26 | 2.44 | 2.64 | 2.86 | 3.29 |
| 6.0 | 2.14 | 2.26 | 2.39 | 2.62 | 2.85 | 3.11 | 3.62 |
| 7.0 | 2.23 | 2.37 | 2.52 | 2.79 | 3.06 | 3.36 | 3.96 |
| 8.0 | 2.32 | 2.48 | 2.66 | 2.96 | 3.27 | 3.62 | 4.30 |
| 9.0 | 2.41 | 2.59 | 2.79 | 3.13 | 3.48 | 3.87 | 4.64 |
| 10.0 | 2.51 | 2.70 | 2.92 | 3.30 | 3.68 | 4.12 | 4.98 |
| 11.0 | 2.60 | 2.81 | 3.06 | 3.47 | 3.89 | 4.38 | 5.32 |
| 12.0 | 2.69 | 2.92 | 3.19 | 3.64 | 4.10 | 4.63 | 5.66 |
| 13.0 | 2.78 | 3.03 | 3.32 | 3.81 | 4.31 | 4.88 | 6.00 |
| 14.0 | 2.87 | 3.14 | 3.46 | 3.98 | 4.52 | 5.14 | 6.34 |
| 15.0 | 2.96 | 3.25 | 3.59 | 4.15 | 4.73 | 5.39 | 6.68 |

1. For barcoded discount, deduct $0.03 per parcel (machinable parcels only, 50-piece minimum).

**Presorted and Carrier Route Rates**
2.2

Each piece is subject to both a piece rate and a pound rate:

| Rate | Zone | | | | | | |
|---|---|---|---|---|---|---|---|
| | Local, 1 & 2 | 3 | 4 | 5 | 6 | 7 | 8 |
| Per Piece | | | | | | | |
| Presorted[1] | $0.91 | $0.91 | $0.91 | $0.91 | $0.91 | $0.91 | $0.91 |
| Carrier Route | 0.81 | 0.81 | 0.81 | 0.81 | 0.81 | 0.81 | 0.81 |
| Per Pound | 0.07 | 0.09 | 0.11 | 0.15 | 0.19 | 0.23 | 0.32 |

1. For barcoded discount, deduct $0.03 per piece (machinable parcels only). Barcoded discount is not available for parcels mailed at Carrier Route rates.

**Destination Entry Rates**
2.3

Each piece is subject to both a piece rate and a pound rate:

| Rate | DDU | DSCF | DBMC Zone[1] | | | |
|---|---|---|---|---|---|---|
| | | | 1 & 2 | 3 | 4 | 5 |
| Per Piece | | | | | | |
| Presorted | $0.57[2] | $0.63 | $0.78 | $0.78 | $0.78 | $0.78 |
| Carrier Route | 0.47 | 0.53 | 0.68 | 0.68 | 0.68 | 0.68 |
| Per Pound | 0.03 | 0.05 | 0.06 | 0.09 | 0.11 | 0.15 |

1. For barcoded discount on Presorted pieces, deduct $0.03 per piece (machinable parcels only). Except for mail entered at the Phoenix, AZ, ASF, the barcoded discount is not available for DBMC mail entered at an ASF. Barcoded discount is not available for parcels mailed at Carrier Route rates.
2. This rate is not available for flats that weigh 1 pound or less.

## 3.0 MEDIA MAIL

| Weight Not Over (pounds) | Single-Piece[1] | 5-Digit | BMC[1] |
|---|---|---|---|
| 1 | $1.30 | $0.70 | $1.00 |
| 2 | 1.75 | 1.15 | 1.45 |
| 3 | 2.20 | 1.60 | 1.90 |
| 4 | 2.65 | 2.05 | 2.35 |
| 5 | 3.10 | 2.50 | 2.80 |
| 6 | 3.55 | 2.95 | 3.25 |
| 7 | 4.00 | 3.40 | 3.70 |
| 8 | 4.30 | 3.70 | 4.00 |
| 9 | 4.60 | 4.00 | 4.30 |
| 10 | 4.90 | 4.30 | 4.60 |
| 11 | 5.20 | 4.60 | 4.90 |
| 12 | 5.50 | 4.90 | 5.20 |
| 13 | 5.80 | 5.20 | 5.50 |
| 14 | 6.10 | 5.50 | 5.80 |
| 15 | 6.40 | 5.80 | 6.10 |
| 16 | 6.70 | 6.10 | 6.40 |
| 17 | 7.00 | 6.40 | 6.70 |
| 18 | 7.30 | 6.70 | 7.00 |
| 19 | 7.60 | 7.00 | 7.30 |
| 20 | 7.90 | 7.30 | 7.60 |
| 21 | 8.20 | 7.60 | 7.90 |
| 22 | 8.50 | 7.90 | 8.20 |
| 23 | 8.80 | 8.20 | 8.50 |
| 24 | 9.10 | 8.50 | 8.80 |
| 25 | 9.40 | 8.80 | 9.10 |
| 26 | 9.70 | 9.10 | 9.40 |
| 27 | 10.00 | 9.40 | 9.70 |
| 28 | 10.30 | 9.70 | 10.00 |
| 29 | 10.60 | 10.00 | 10.30 |
| 30 | 10.90 | 10.30 | 10.60 |
| 31 | 11.20 | 10.60 | 10.90 |
| 32 | 11.50 | 10.90 | 11.20 |
| 33 | 11.80 | 11.20 | 11.50 |
| 34 | 12.10 | 11.50 | 11.80 |
| 35 | 12.40 | 11.80 | 12.10 |
| 36 | 12.70 | 12.10 | 12.40 |
| 37 | 13.00 | 12.40 | 12.70 |
| 38 | 13.30 | 12.70 | 13.00 |
| 39 | 13.60 | 13.00 | 13.30 |
| 40 | 13.90 | 13.30 | 13.60 |
| 41 | 14.20 | 13.60 | 13.90 |
| 42 | 14.50 | 13.90 | 14.20 |
| 43 | 14.80 | 14.20 | 14.50 |
| 44 | 15.10 | 14.50 | 14.80 |
| 45 | 15.40 | 14.80 | 15.10 |
| 46 | 15.70 | 15.10 | 15.40 |
| 47 | 16.00 | 15.40 | 15.70 |
| 48 | 16.30 | 15.70 | 16.00 |
| 49 | 16.60 | 16.00 | 16.30 |
| 50 | 16.90 | 16.30 | 16.60 |
| 51 | 17.20 | 16.60 | 16.90 |
| 52 | 17.50 | 16.90 | 17.20 |
| 53 | 17.80 | 17.20 | 17.50 |
| 54 | 18.10 | 17.50 | 17.80 |
| 55 | 18.40 | 17.80 | 18.10 |
| 56 | 18.70 | 18.10 | 18.40 |
| 57 | 19.00 | 18.40 | 18.70 |
| 58 | 19.30 | 18.70 | 19.00 |
| 59 | 19.60 | 19.00 | 19.30 |
| 60 | 19.90 | 19.30 | 19.60 |
| 61 | 20.20 | 19.60 | 19.90 |
| 62 | 20.50 | 19.90 | 20.20 |
| 63 | 20.80 | 20.20 | 20.50 |
| 64 | 21.10 | 20.50 | 20.80 |
| 65 | 21.40 | 20.80 | 21.10 |
| 66 | 21.70 | 21.10 | 21.40 |
| 67 | 22.00 | 21.40 | 21.70 |
| 68 | 22.30 | 21.70 | 22.00 |
| 69 | 22.60 | 22.00 | 22.30 |
| 70 | 22.90 | 22.30 | 22.60 |

1. For barcoded discount, deduct $0.03 per parcel (machinable parcels only, 50-piece minimum for single-piece rate).

## 4.0 LIBRARY MAIL

| Weight Not Over (pounds) | Single-Piece[1] | 5-Digit | BMC[1] |
|---|---|---|---|
| 1 | $1.24 | $0.67 | $0.95 |
| 2 | 1.67 | 1.10 | 1.38 |
| 3 | 2.10 | 1.53 | 1.81 |
| 4 | 2.53 | 1.96 | 2.24 |
| 5 | 2.96 | 2.39 | 2.67 |
| 6 | 3.39 | 2.82 | 3.10 |
| 7 | 3.82 | 3.25 | 3.53 |
| 8 | 4.11 | 3.54 | 3.82 |
| 9 | 4.40 | 3.83 | 4.11 |
| 10 | 4.69 | 4.12 | 4.40 |
| 11 | 4.98 | 4.41 | 4.69 |
| 12 | 5.27 | 4.70 | 4.98 |
| 13 | 5.56 | 4.99 | 5.27 |
| 14 | 5.85 | 5.28 | 5.56 |
| 15 | 6.14 | 5.57 | 5.85 |
| 16 | 6.43 | 5.86 | 6.14 |
| 17 | 6.72 | 6.15 | 6.43 |
| 18 | 7.01 | 6.44 | 6.72 |
| 19 | 7.30 | 6.73 | 7.01 |
| 20 | 7.59 | 7.02 | 7.30 |
| 21 | 7.88 | 7.31 | 7.59 |
| 22 | 8.17 | 7.60 | 7.88 |
| 23 | 8.46 | 7.89 | 8.17 |
| 24 | 8.75 | 8.18 | 8.46 |
| 25 | 9.04 | 8.47 | 8.75 |
| 26 | 9.33 | 8.76 | 9.04 |
| 27 | 9.62 | 9.05 | 9.33 |
| 28 | 9.91 | 9.34 | 9.62 |
| 29 | 10.20 | 9.63 | 9.91 |
| 30 | 10.49 | 9.92 | 10.20 |
| 31 | 10.78 | 10.21 | 10.49 |
| 32 | 11.07 | 10.50 | 10.78 |
| 33 | 11.36 | 10.79 | 11.07 |
| 34 | 11.65 | 11.08 | 11.36 |
| 35 | 11.94 | 11.37 | 11.65 |
| 36 | 12.23 | 11.66 | 11.94 |
| 37 | 12.52 | 11.95 | 12.23 |
| 38 | 12.81 | 12.24 | 12.52 |
| 39 | 13.10 | 12.53 | 12.81 |
| 40 | 13.39 | 12.82 | 13.10 |
| 41 | 13.68 | 13.11 | 13.39 |
| 42 | 13.97 | 13.40 | 13.68 |
| 43 | 14.26 | 13.69 | 13.97 |
| 44 | 14.55 | 13.98 | 14.26 |
| 45 | 14.84 | 14.27 | 14.55 |
| 46 | 15.13 | 14.56 | 14.84 |
| 47 | 15.42 | 14.85 | 15.13 |
| 48 | 15.71 | 15.14 | 15.42 |
| 49 | 16.00 | 15.43 | 15.71 |
| 50 | 16.29 | 15.72 | 16.00 |
| 51 | 16.58 | 16.01 | 16.29 |
| 52 | 16.87 | 16.30 | 16.58 |
| 53 | 17.16 | 16.59 | 16.87 |
| 54 | 17.45 | 16.88 | 17.16 |
| 55 | 17.74 | 17.17 | 17.45 |
| 56 | 18.03 | 17.46 | 17.74 |
| 57 | 18.32 | 17.75 | 18.03 |
| 58 | 18.61 | 18.04 | 18.32 |
| 59 | 18.90 | 18.33 | 18.61 |
| 60 | 19.19 | 18.62 | 18.90 |
| 61 | 19.48 | 18.91 | 19.19 |
| 62 | 19.77 | 19.20 | 19.48 |
| 63 | 20.06 | 19.49 | 19.77 |
| 64 | 20.35 | 19.78 | 20.06 |
| 65 | 20.64 | 20.07 | 20.35 |
| 66 | 20.93 | 20.36 | 20.64 |
| 67 | 21.22 | 20.65 | 20.93 |
| 68 | 21.51 | 20.94 | 21.22 |
| 69 | 21.80 | 21.23 | 21.51 |
| 70 | 22.09 | 21.52 | 21.80 |

1. For barcoded discount, deduct $0.03 per parcel (machinable parcels only, 50-piece minimum for single-piece rate).

**5.0 FEES**

**Address Correction Service Fees**
5.1

Fees per correction:

a. Manual notice: $0.60.

b. Electronic notice: $0.20.

**Destination Entry Mailing Fees**
5.2

Destination entry mailing fees, per 12-month period:

a. Parcel Select: $125.00.

b. Bound Printed Matter (DBMC, DSCF, DDU): $125.00.

**Pickup Fees**
5.3

Parcel Post only, per occurrence: $10.25. May be combined with Express Mail and Priority Mail pickups.

**Presort Mailing Fees**
5.4

Presort mailing fees, per 12-month period:

a. Presorted Media Mail: $125.00.

b. Presorted Library Mail: $125.00.

**6.0 BARCODED DISCOUNT**

Deduct $0.03 for machinable parcels with a barcode (see E700 for eligibility).

# R900 Services

## 1.0 ADDRESS CORRECTION SERVICE (F030)

For all classes of mail:

a. Manual notice, each: $0.60.

b. Electronic notice, each: $0.20.

## 2.0 ADDRESS SEQUENCING SERVICE (A920)

**Basic Service**
2.1

Each card removed because of an incorrect or undeliverable address: $0.25.

**Blanks for Missing Addresses**
2.2

Each card removed because of an incorrect or undeliverable address: $0.25.

Insertion of blank cards for missing addresses: No charge.

**Missing or New Addresses Added**
2.3

Each card removed because of an incorrect or undeliverable address: $0.25.

Each address added: $0.25.

## 3.0 BULK PARCEL RETURN SERVICE (BPRS) (S924)

**Permit Fee**
3.1

Annual permit fee: $125.00.

**Accounting Fee**
3.2

Annual accounting fee: $375.00.

**Per Piece Charge**
3.3

For each piece returned, regardless of weight: $1.62.

## 4.0 BUSINESS REPLY MAIL (BRM) (S922)

**Basic BRM**
4.1

Annual permit fee: $125.00.

Per piece charge (in addition to the applicable First-Class Mail or Priority Mail postage (R100)): $0.35.

**High-Volume BRM**
4.2

Annual permit fee: $125.00.

Annual accounting fee (for advanced deposit account): $375.00.

Per piece charge (in addition to the applicable First-Class Mail or Priority Mail postage (R100)): $0.10.

**Basic QBRM**
4.3

Annual permit fee: $125.00.

Annual accounting fee (for advanced deposit account): $375.00.

Per piece charge (in addition to the automation First-Class Mail QBRM postage (R100.3.0)): $0.05.

**High-Volume QBRM**
4.4

Annual permit fee: $125.00.

Annual accounting fee (for advanced deposit account): $375.00.

Quarterly fee: $1,800.00.

Per piece charge (in addition to First-Class Mail QBRM postage (R100.3.0)): $0.01.

**Bulk Weight Averaged Nonletter-Size BRM**
4.5

Annual permit fee: $125.00.

Annual accounting fee (for advanced deposit account): $375.00.

Monthly maintenance fee: $600.00.

Per piece charge (in addition to the applicable First-Class Mail or Priority Mail postage (R100)): $0.01.

**5.0 CALLER SERVICE (D920)**

Fees are charged as follows:

a. For each separation provided, per semiannual period (all post offices): $375.00.

b. For each reserved call number, per calendar year (all post offices): $30.00.

**6.0 CERTIFICATE OF MAILING (S914)**

**Per Piece**
6.1

Fee, in addition to postage:

a. For each Form 3817 or facsimile: $0.75.

b. For firm mailing books (Form 3877 or facsimile), per piece listed: $0.25 (minimum charge $0.75).

c. For duplicate copy of Form 3817, Form 3877, or facsimile, per page: $0.75.

**Bulk Quantities**
6.2

Fee, in addition to postage for each Form 3606 (or facsimile):

| Service | Fee |
|---|---|
| One certificate for first 1,000 pieces (or fraction thereof) | $3.50 |
| Each additional 1,000 pieces (or fraction thereof) | 0.40 |
| Duplicate copy of Form 3606 | 0.75 |

**7.0 CERTIFIED MAIL (S912)**

Fee, in addition to postage and other fees, per piece: $1.90.

## 8.0 COLLECT ON DELIVERY (COD) (S921)

Fee, in addition to postage and other fees, per piece:

| Amount to be collected or insurance coverage desired[1] | | | Fee |
|---|---|---|---|
| $0.01 | to | 50.00 | $4.50 |
| 50.01 | to | 100.00 | 5.50 |
| 100.01 | to | 200.00 | 6.50 |
| 200.01 | to | 300.00 | 7.50 |
| 300.01 | to | 400.00 | 8.50 |
| 400.01 | to | 500.00 | 9.50 |
| 500.01 | to | 600.00 | 10.50 |
| 600.01 | to | 700.00 | 11.50 |
| 700.01 | to | 800.00 | 12.50 |
| 800.01 | to | 900.00 | 13.50 |
| 900.01 | to | 1,000.00 | 14.50 |
| Restricted delivery[2] | | | $3.20 |
| Notice of nondelivery | | | 3.00 |
| Alteration of COD charges or designation of new addressee | | | 3.00 |
| Registered COD[3] | | | 4.00 |

1. For Express Mail COD shipments, the COD fee charged is based on the amount to be collected.
2. Not available with Express Mail COD.
3. Fee for registered COD, regardless of amount to be collected or insurance value.

## 9.0 DELIVERY CONFIRMATION (S918)

Fee, in addition to postage and other fees, per piece:

| Type | Fee |
|---|---|
| **Priority Mail** | |
| Electronic | $0.00 |
| Retail | 0.40 |
| **Standard Mail**[1] | |
| Electronic | 0.12 |
| **Package Services** | |
| Electronic | 0.12 |
| Retail | 0.50 |

1. Only available for pieces subject to the residual shape surcharge.

## 10.0 EXPRESS MAIL INSURANCE (S500)

Fee, in addition to postage and other fees:

a. For amount of merchandise insurance liability:

| Insurance Coverage Desired | | | Fee |
|---|---|---|---|
| $ 0.01 | to | $ 500.00 | $0.00 |
| 500.01 | to | 5,000.00 | $1.00 per $100 or fraction thereof over $500 in desired coverage |
| Express Mail merchandise maximum liability: $5,000.00. | | | |

b. Document reconstruction maximum liability: $500.00.

**11.0 INSURED MAIL (S913)**

Fee, in addition to postage and other fees, for merchandise insurance liability, per piece:

| Insurance Coverage Desired | | | Fee | Bulk Insurance Fee |
|---|---|---|---|---|
| $ 0.01 | to | $ 50.00[1] | $1.10 | $0.50 |
| 50.01 | to | 100.00[2] | 2.00 | 1.20 |
| 100.01 | to | 200.00 | 3.00 | 2.20 |
| 200.01 | to | 300.00 | 4.00 | 3.20 |
| 300.01 | to | 400.00 | 5.00 | 4.20 |
| 400.01 | to | 500.00 | 6.00 | 5.20 |
| 500.01 | to | 600.00 | 7.00 | 6.20 |
| 600.01 | to | 700.00 | 8.00 | 7.20 |
| 700.01 | to | 800.00 | 9.00 | 8.20 |
| 800.01 | to | 900.00 | 10.00 | 9.20 |
| 900.01 | to | 1,000.00 | 11.00 | 10.20 |
| 1,000.01 | to | 5,000.00 | 11.00 plus $1.00 per $100 or fraction thereof over $1,000 in desired coverage | 10.20 plus $1.00 per $100 or fraction thereof over $1,000 in desired coverage |

Insured mail maximum liability: $5,000.00.

1. For merchandise insured for $50 or less, Form 3813 is used with an elliptical insured marking (no insured number is assigned).
2. For merchandise insured for more than $50, Form 3813-P is used with an insured number.

**12.0 MAILING LIST SERVICE (A910)**

**List Correction**
12.1 For each address on list: $0.25.
Minimum charge per list: $7.50.

**5-Digit ZIP Code Sortation**
12.2 For sortation of mailing lists on cards into groups labeled by 5-digit ZIP Code, per 1,000 addresses or fraction: $73.00.

**Election Boards**
12.3 For address changes provided to election boards and voter registration commissions, per Form 3575: $0.23.

**13.0 MERCHANDISE RETURN SERVICE (S923)**

**Permit Fee**
13.1 Annual permit fee: $125.00.

**Accounting Fee**
13.2 Annual accounting fee (for advance deposit account): $375.00.

**Per Piece Charge**
13.3 For each piece returned: $0.00.

**14.0 METER SERVICE (P030)**

Fees for on-site meter service:

a. Meter service (per employee, per visit): $31.00.

b. Meters reset/examined (per meter): $4.00.

c. Checking meters in/out service (per meter, except for Secured Postage meters): $4.00.

## 15.0 MONEY ORDERS (S020)

Fees, each:

a. Domestic money order: $0.75.

b. Postal military money order (issued by military facilities authorized by the Department of Defense): $0.25.

c. Inquiry (includes the issuance of a copy of a paid money order): $2.75.

## 16.0 PARCEL AIRLIFT (PAL) (S930)

Fee, in addition to postage and other fees, per piece:

| Weight | Fee |
|---|---|
| Not more than 2 pounds | $0.40 |
| Over 2 but not more than 3 pounds | 0.75 |
| Over 3 but not more than 4 pounds | 1.15 |
| Over 4 pounds but not more than 30 pounds | 1.55 |

## 17.0 PERMIT IMPRINT (P040)

Application fee: $125.00.

## 18.0 PICKUP SERVICE (D010)

Available for Express Mail, Priority Mail, and Parcel Post, per pickup: $10.25.

## 19.0 POST OFFICE BOX SERVICE (D910)

For service provided:

a. Deposit per key issued: $1.00.

b. Key duplication or replacement (after first two keys), each: $4.00.

c. Post office box lock replacement, each: $10.00.

d. Box fee per semiannual (6-month) period:

| | Box Size and Fee | | | | |
|---|---|---|---|---|---|
| Fee Group | 1 | 2 | 3 | 4 | 5 |
| B2 | $30.00 | $45.00 | $85.00 | $170.00 | $300.00 |
| C3 | 27.50 | 40.00 | 75.00 | 150.00 | 250.00 |
| C4 | 22.50 | 32.50 | 60.00 | 125.00 | 212.50 |
| C5 | 19.00 | 27.50 | 50.00 | 87.50 | 150.00 |
| D6 | 10.00 | 16.00 | 25.00 | 50.00 | 90.00 |
| D7 | 8.50 | 13.00 | 22.50 | 40.00 | 65.00 |
| E[1] | 0.00 | 0.00 | 0.00 | 0.00 | 0.00 |

1. A customer ineligible for carrier delivery service may obtain one post office box at the Group E fee, subject to administrative decisions regarding customer's proximity to post office. See D910.

## 20.0 REGISTERED MAIL (S911)

| Insurance Status | Declared Value | | | Fee (in addition to postage and handling charge) | Handling Charge (in addition to postage and fee) |
|---|---|---|---|---|---|
| **Without Insurance** | $ .00 | | | $7.25 | — |
| **With Insurance** (for declared value) | $ 0.01 | to | 100.00 | 7.50 | — |
| | 100.01 | to | 500.00 | 8.25 | — |
| | 500.01 | to | 1,000.00 | 9.00 | — |
| | 1,000.01 | to | 2,000.00 | 9.75 | — |
| | 2,000.01 | to | 3,000.00 | 10.50 | — |
| | 3,000.01 | to | 4,000.00 | 11.25 | — |
| | 4,000.01 | to | 5,000.00 | 12.00 | — |
| | 5,000.01 | to | 6,000.00 | 12.75 | — |
| | 6,000.01 | to | 7,000.00 | 13.50 | — |
| | 7,000.01 | to | 8,000.00 | 14.25 | — |
| | 8,000.01 | to | 9,000.00 | 15.00 | — |
| | 9,000.01 | to | 10,000.00 | 15.75 | — |
| | 10,000.01 | to | 25,000.00 | $15.75 plus $0.75 per $1,000 or fraction over $10,000 | — |
| **With Insurance**[1] (for declared value) | $25,000.01 | to | $1,000,000.00 | $27.00 | plus 75 cents for each $1,000 (or fraction thereof) over $25,000 |
| | 1,000,000.01 | to | 15,000,000.00 | 758.25 | plus 75 cents for each $1,000 (or fraction thereof) over $1,000,000 |
| | 15,000,000.01+ | | | 11,258.25 | plus amount determined by the Postal Service based on weight, space, and value |

1. Articles with a declared value of more than $25,000 can be registered, but compensation for loss or damage is limited to $25,000.

## 21.0 RESTRICTED DELIVERY (S916)

Fee, in addition to postage and other fees, per piece: $3.20.

## 22.0 RETURN RECEIPT (S915)

Fee, in addition to postage and other fees, per piece:

| Type | Fee |
|---|---|
| **Requested at time of mailing** (showing to whom delivered, original signature, date of delivery, and addressee's address, if different) | $1.50 |
| **Requested after mailing** (showing to whom delivered, signature, date of delivery, and delivery address) | 3.50 |

## 23.0 RETURN RECEIPT FOR MERCHANDISE (S917)

Fee, in addition to postage and other fees, per piece:

| Type | Fee |
|---|---|
| **Requested at time of mailing** (showing to whom delivered, signature, date of delivery, and delivery address if available) | $2.35 |
| **Delivery record** | 3.50 |

## 24.0 SHIPPER PAID FORWARDING (F010)

Annual accounting fee for (optional) advance deposit account: $375.00.

## 25.0 SIGNATURE CONFIRMATION (S919)

Fee, in addition to postage and other fees, per piece:

| Type | Fee |
|---|---|
| **Priority Mail** | |
| Electronic | $1.25 |
| Retail | 1.75 |
| **Package Services** | |
| Electronic | $1.25 |
| Retail | 1.75 |

## 26.0 SPECIAL HANDLING (S930)

Fee, in addition to postage and other fees, per piece:

| Weight | Fee |
|---|---|
| Not more than 10 pounds | $5.40 |
| Over 10 pounds | 7.50 |

BILLING CODE 7710–12–C

## S SPECIAL SERVICES

### S000 Miscellaneous Services

*S010 Indemnity Claims*

* * * * *

2.0 GENERAL FILING INSTRUCTIONS

**2.1 Who May File**

[Amend 2.1 by revising 2.1a and 2.1c to read as follows:]

A claim may be filed by:

a. Only the sender, for the complete loss of a registered, insured, COD, or Express Mail item (including merchandise return service parcels to which special services were added and paid for by the sender).

* * * * *

c. Only the merchandise return permit holder, for merchandise return service parcels that are registered or insured as indicated by the permit holder on the MRS label.

* * * * *

*S070 Mixed Classes*

1.0 BASIC INFORMATION

**1.1 Priority Mail Drop Shipment**

[Amend 1.1 by replacing ''Standard Mail (B)'' with ''Package Services''; and by providing for use of Delivery Confirmation and Signature Service with enclosed mail to read as follows:]

For a Priority Mail drop shipment, enclosed First-Class Mail may be sent certified or special handing; enclosed Standard Mail may be sent with electronic option Delivery Confirmation; enclosed Package Services mail may be sent special handling, electronic option Delivery Confirmation, or electronic option Signature Confirmation. Enclosed mail may not be sent registered, insured, or collect on delivery (COD). No special services may be added to the Priority Mail segment of the drop shipment.

**1.2 Special Handling**

[Amend 1.2 by replacing ''Standard Mail (B)'' with ''Package Services''; no other changes to text.]

* * * * *

### S500 Special Services for Express Mail

* * * * *

[Amend 2.0 by changing ''Standard Mail'' to ''Package Services'' and by providing for use of electronic option Delivery Confirmation and electronic option Signature Service with enclosed mail to read as follows:]

2.0 EXPRESS MAIL DROP SHIPMENT

Mail enclosed in an Express Mail drop shipment may be sent certified (if First-Class Mail) or special handling. For an Express Mail drop shipment, enclosed First-Class Mail may be sent certified or, if Priority Mail, with electronic option Delivery Confirmation service; enclosed Standard Mail parcels may be sent with electronic option Delivery Confirmation service; enclosed Package Services mail may be sent with special handling, electronic option Delivery Confirmation service, or electronic option Signature Confirmation service. The enclosed mail may not be sent collect on delivery (COD), insured, or registered. For Express Mail indemnity coverage, the content of each Express Mail pouch is considered one mailpiece.

### S900 Special Postal Services

*S910 Security and Accountability*

*S911 Registered Mail*

1.0 BASIC INFORMATION

* * * * *

**1.5 Additional Services**

[Amend 1.5 by clarifying the additional services that can be used with registered mail to read as follows:]

Purchasing registered mail service allows customers to then purchase restricted delivery service or a return receipt. The following additional services may be combined with registered mail if the applicable standards for the services are met and the additional service fees are paid:

a. COD.

b. Delivery Confirmation.

c. Signature Confirmation.

* * * * *

*S912 Certified Mail*

1.0 BASIC INFORMATION

* * * * *

**1.4 Additional Services**

[Revise 1.4 to read as follows:]

Purchasing certified mail service allows customers to then purchase restricted delivery service or a return receipt.

[Add new 1.5 to specify that mailers may request a receipt after mailing to read as follows:]

**1.5 Delivery Record**

Mailers may request a delivery record after mailing under S915.

2.0 MAILING

* * * * *

**2.5 Procedure**

[Amend 2.5 by revising 2.5a to read as follows:]

A mailer of certified mail must:

a. Enter on Form 3800 the name and complete address of the person or firm to whom the mail is addressed.

* * * * *

*S913 Insured Mail*

1.0 BASIC INFORMATION

* * * * *

**1.2 Eligible Matter**

[Amend 1.2 by changing the class names, removing the ''Standard Mail Enclosed'' marking requirement, and adding bulk insurance to Standard Mail to read as follows:]

The following types of mail matter may be insured:

a. Package Services.

b. First-Class Mail (including Priority Mail), if it contains matter that may be mailed as Package Services.

c. Standard Mail pieces subject to the residual shape surcharge (bulk insurance only).

d. Official government mail endorsed ''Postage and Fees Paid.''

**1.3 Ineligible Matter**

[Amend 1.3 by revising 1.3f to read as follows:]

The following types of mail may not be insured:

* * * * *

f. Standard Mail cards, letters, and flats (i.e., pieces that are not subject to the residual shape surcharge).

* * * * *

**1.5 Additional Services**

[Revise 1.5 to read as follows:]

Insuring an item for more than $50 allows customers to then purchase restricted delivery service or a return receipt. The following additional services may be combined with insurance if the applicable standards for the services are met and the additional service fees are paid:

a. Delivery Confirmation.

b. Parcel airlift service (PAL).

d. Return receipt for merchandise (for items insured for up to $50).

f. Signature Confirmation.

g. Special handling.

[Add new 1.6 to show that customers may request a delivery record after mailing to read as follows:]

**1.6 Delivery Record**

Mailers may request a delivery record after mailing under S915.

* * * * *

2.0 MAILING

* * * * *

[Effective November 30, 2000, the Postal Service revised DMM S913.2.0 to include new information about integrated barcodes. See Postal Bulletin 22038 (11–30–00). The revisions below reflect those changes.]

**2.5 Integrated Barcodes**

[Amend 2.5 to include information about Signature Confirmation to read as follows:]

There are two other options available for mailers who print their own labels:

a. An integrated barcode may be used by Delivery Confirmation electronic option mailers who wish to combine insurance with Delivery Confirmation or insurance with Signature Confirmation into a single barcode on the shipping label to eliminate multiple labels and barcodes on packages. Additional information on the integrated barcode solution can be found in Publication 91, Delivery Confirmation Technical Guide, November 2000 edition (which includes the Addendum on Signature Confirmation and integrated barcodes.)

b. Mailers have a third option for privately printed labels with insurance. The privately printed form must meet the specifications described in Publication 91 (see Exhibit 2.4). Applicable certification procedures must be followed, also as specified in Publication 91.

* * * * *

4.0 DELIVERY

[Amend 4.0 by changing ''parcel'' to ''item'' to read as follows:]

An item insured for $50 or less is delivered as ordinary mail. Delivery of insured mail is subject to D042.

*S914 Certificate of Mailing*

1.0 BASIC INFORMATION

**1.1 Description**

[Amend 1.1 to read as follows:]

Certificate of mailing service provides evidence that mail has been presented to the Postal Service for mailing. Certificate of mailing service does not provide a record of delivery.

[Revise heading of 1.2 to read as follows:]

**1.2 Eligible Matter—Bulk Quantities**

[Amend 1.2 by clarifying text to read as follows:]

Form 3606 is used for a bulk mailing as a certificate to specify the number of pieces mailed. This certificate is provided only for a mailing of identical pieces of First-Class Mail, Standard Mail, and Package Services. This certificate states only the total number of articles mailed and must not be used as an itemized list. A certificate of mailing cannot be issued for a bulk mailing paid with a permit imprint.

[Revise heading of 1.3 to read as follows:]

**1.3 Eligible Matter—Single Pieces**

[Amend 1.3 by clarifying text to read as follows:]

Form 3817 is used for a certificate for a single piece of First-Class Mail (including Priority Mail) or Package Services. Privately printed forms also may be used.

[Revise heading of 1.4 to read as follows:]

**1.4 Eligible Matter—Three or More Single Pieces**

[Amend 1.4 by clarifying the first sentence to read as follows:]

When requesting a certificate of mailing for three or more pieces of single-piece rate mail presented at one time, a mailer may use Form 3877 (firm mailing book) or a privately printed facsimile, subject to payment of the applicable fee for each item listed.

* * *

* * * * *

[Add new 1.7 to read as follows:]

**1.7 Additional Services**

The following services may be combined with certificate of mailing on single pieces if the applicable standards for the services are met and the additional service fees are paid:

a. Parcel airlift service (PAL).

b. Special handling.

* * * * *

*S915 Return Receipt*

1.0 BASIC INFORMATION

**1.1 Description**

[Revise 1.1 to show that the return receipt is mailed back to sender:]

Return receipt service provides a mailer with evidence of delivery (to whom the mail was delivered and date of delivery). After delivery, the return receipt is mailed back to the sender. A return receipt requested before mailing also supplies the recipient's actual delivery address, if the delivery address is different from the address used by the sender. A return receipt may be requested before or after mailing.

[Revise 1.2 to read as follows:]

**1.2 Eligible Matter**

Return receipt service is available for Express Mail. It is available also for First-Class Mail (including Priority Mail) and Package Services when purchased at the time of mailing with one of the following services:

a. Certified mail.

b. COD.

c. Insurance (for more than $50).

d. Registered mail.

* * * * *

[Add new 1.7 to show additional services to read as follows:]

**1.7 Additional Services**

If return receipt service has already been purchased with one of the services listed in 1.2, then one or more of the following special services may be combined with those services at the time of mailing if the applicable standards for the services are met and the additional service fees are paid:

a. Delivery Confirmation (Priority Mail and Package Services only).

b. Parcel airlift service (PAL) (Priority Mail and Package Services only).

c. Restricted delivery.

d. Signature Confirmation (Priority Mail and Package Services only).

e. Special handling.

2.0 OBTAINING SERVICE

* * * * *

**2.2 After Mailing**

[Revise 2.2 to clarify how to apply for a delivery record after mailing:]

The mailer may request a delivery record after mailing for Express Mail, certified mail, registered mail, COD mail, and mail insured for more than $50. When a delivery record is available, the USPS provides the mailer information from that record, including to whom the mail was delivered and the date of delivery. The mailer requests a delivery record by completing Form 3811–A, paying the appropriate fee in R900, and submitting the request to one of the following offices:

a. For items mailed to an APO/FPO, U.S. territory or possession, or freely associated state (with the exception of Puerto Rico and the U.S. Virgin Islands), the form should be sent to the office of delivery.

b. For items delivered prior to activation of the signature capture process (August 1, 2000), send the form to the office of delivery.

c. For items delivered on or after activation of the signature capture process (August 1, 2000), send the form to any post office.

[Add new 2.3 to show the time limits for requesting a delivery record after mailing:]

**2.3 Time Limit**

A request for a return receipt after mailing for Express Mail must be submitted within 90 days after the date of mailing. All other requests must be submitted within 2 years from the date of mailing.

* * * * *

4.0 REQUESTS FOR DELIVERY INFORMATION

* * * * *

[Amend 4.2 to remove references to the ''actual delivery record'' to read as follows:]

**4.2 Form 3811–A**

The mailer must complete a Form 3811–A at any post office. The applicable fee is waived if the mailer can produce a receipt showing the applicable return receipt fee was paid.

* * * * *

*S916 Restricted Delivery*

1.0 BASIC INFORMATION

* * * * *

[Revise the heading and text of 1.2 to clarify that restricted delivery cannot be used with Standard Mail to read as follows:]

**1.2 Eligible Matter**

Restricted delivery service is available for First-Class Mail (including Priority Mail) and Package Services that is sent COD, insured for more than $50, registered, or certified.

* * * * *

[Add new 1.7 to read as follows:]

**1.7 Additional Services**

In addition to the prerequisites listed in 1.2, the following services may be combined with restricted delivery if the applicable standards for the services are met and the additional service fees are paid:

a. Delivery Confirmation.
b. Parcel airlift service (PAL).
c. Signature Confirmation.
d. Special handling.

* * * * *

*S917 Return Receipt for Merchandise*

1.0 BASIC INFORMATION

**1.1 Description**

[Add the following sentence after the first sentence:]

* * * After delivery, the return receipt is mailed back to the sender. * * *

* * * * *

[Revise heading of 1.2 to read as follows:]

**1.2 Eligible Matter**

[Amend 1.2 to add return receipt for merchandise service to Standard Mail:]

Return receipt for merchandise is available for merchandise sent as Priority Mail, Standard Mail pieces subject to the residual shape surcharge, and Package Services.

**1.3 Additional Services**

[Amend 1.3 by clarifying text to read as follows:]

The following services may be combined with return receipt for merchandise if the applicable standards for the services are met and the additional service fees are paid:

a. Delivery Confirmation.
b. Insurance (for up to $50).
c. Parcel airlift service (PAL).
d. Special handling.

* * * * *

[Add new 2.7 to specify how a mailer applies for a delivery record:]

**2.7 Receipt Not Received**

A mailer who does not receive return receipt for merchandise service for which the mailer has paid may request information from the delivery record, at no additional charge, by using Form 3811–A. Any request must be filed within 2 years after the date of mailing. Mailers cannot request a delivery record unless the item originally was sent with return receipt for merchandise.

3.0 DELIVERY

[Amend 3.0 to delete information about delivery records to read as follows:]

Delivery of return receipt for merchandise mail is subject to D042.

*S918 Delivery Confirmation*

1.0 BASIC INFORMATION

* * * * *

**1.2 Eligible Matter**

[Amend 1.2 by adding availability of electronic option to Standard Mail subject to residual shape surcharge to read as follows:]

Delivery Confirmation service is available for Priority Mail, Standard Mail pieces subject to the residual shape surcharge (electronic option only), and Package Services.

[Revise the heading and text of 1.3 to read as follows:]

**1.3 Ineligible Matter**

Delivery Confirmation is not available for the following:

a. Mail addressed to APO/FPO destinations or to United States territories, possessions, and freely-associated states listed in G011 (except for Puerto Rico and U.S. Virgin Islands, to which service is available).
b. Mail paid with precanceled stamps.
c. Standard Mail cards, letters, and flats (i.e., pieces that are not subject to the residual shape surcharge).

* * * * *

3.0 BARCODES

* * * * *

[Effective November 30, 2000, the Postal Service revised DMM S918.3.4 and S918.4.0c to include new information about integrated barcodes. See Postal Bulletin 22038 (11–30–00). The revisions below reflect those changes.]

**3.4 Integrated Barcodes**

An integrated barcode may be used by mailers printing their own barcodes and using the electronic service option. Mailers may combine Delivery Confirmation and insurance services into a single barcode on the shipping label and eliminate multiple labels and barcodes on packages. Mailers must still meet existing specifications in 3.1 and 3.2. Minor modifications allow users to request multiple special services on Priority Mail and Package Services. Two required changes are:

a. Change the text above the barcode to identify the service requested. Exhibits are included in Publication 91, Delivery Confirmation Technical Guide, November 2000 edition (which includes the Addendum on Signature Confirmation and integrated barcode).
b. Change the service type code in the barcode to identify the class of mail and/or type of special services combined with Delivery Confirmation. Additional information on the Service Type Code Matrix can be found in the Publication 91, Delivery Confirmation Technical Guide, November 2000 edition.

4.0 ELECTRONIC FILE TRANSMISSION

* * * * *

c. Mailers using the electronic option are required to include additional fields in the electronic file when planning to use the integrated barcode. For more information consult Publication 91, Delivery Confirmation Technical Guide, November 2000 edition.

5.0 ACCEPTANCE

[Amend 5.0 by deleting the last sentence in 5.0a.]

* * * * *

[Add new S919 for Signature Confirmation to read as follows:]

*S919 Signature Confirmation*

1.0 BASIC INFORMATION

**1.1 Description**

Signature Confirmation service provides the mailer with information about the date and time an article was delivered and, if delivery was attempted but not successful, the date and time of the delivery attempt. A delivery record, including the recipient's signature, is maintained by the USPS and is

available, via fax or mail, upon request. No acceptance record is kept at the office of mailing. Signature Confirmation service is available only at the time of mailing. Signature Confirmation service does not include insurance.

**1.2 Eligible Matter**

Signature Confirmation is available for Priority Mail and Package Services.

**1.3 Ineligible Matter**

Signature Confirmation service is not available for the following:

a. Mail addressed to APO/FPO destinations or to United States territories, possessions, and freely-associated states listed in G011 (except for Puerto Rico and U.S. Virgin Islands, to which service is available).

b. Mail paid with precanceled stamps.

**1.4 Service Options**

The two Signature Confirmation service options are:

a. Retail option: Available at post offices at the time of mailing. A mailing receipt is provided. Mailers can access delivery information over the Internet at www.usps.com or by calling 1–800–222–1811 toll-free and providing the article number.

b. Electronic option: Available to mailers who apply identifying barcodes to each piece, establish an electronic link with the Postal Service to exchange acceptance and delivery data, provide an electronic file of Signature Confirmation pieces that are entered for mailing, and retrieve delivery status information electronically. No mailing receipt is provided. Mailers can access delivery information over the Internet at www.usps.com or through their electronic file. Requests for delivery records can be made over the Internet or by calling 1–800–222–1811 toll-free and providing the article number.

**1.5 Fees and Postage**

The applicable Signature Confirmation fee in R900 must be paid in addition to the correct postage. The fee and postage may be paid with postage stamps, meter stamps, or permit imprint.

**1.6 Additional Services**

The following special services may be combined with Signature Confirmation if the applicable standards for the services are met and the additional service fees are paid:

a. Collect on delivery (COD).

b. Insurance.

c. Registered mail.

d. Restricted delivery (if purchased with insurance for more than $50, COD, or registry service).

e. Special handling.

**1.7 Where to Mail**

A mailer may mail articles with retail option Signature Confirmation at a post office, branch, or station, or give articles to a rural carrier.

**1.8 Firm Mailing Books**

If three or more articles are presented for mailing at one time, the mailer may use Form 3877, Firm Mailing Book for Accountable Mail, provided by the Postal Service at no charge, or privately printed firm mailing bills. Privately printed or computer-generated firm mailing bills that contain the same information as Form 3877 may be used if approved by the local postmaster. The mailer may omit columns from Form 3877 that are not applicable to Signature Confirmation mail. Required elements are the package identification code (PIC), 5-digit destination ZIP Code, and applicable fees. If the mailer wants the firm mailing bills receipted by the Postal Service, the mailer must present the books with the articles to be mailed at a post office. The sheets of the books are the mailer's receipts. All entries made in firm mailing books must be made by typewriter or ink. Alterations must be initialed by the mailer and accepting postal employee. All unused portions of the addressee column must be obliterated with a diagonal line. A receipt is required for refund requests.

**1.9 Signature Waiver**

Customers who waive the signature requirement must accept the delivery employee's signature and date of delivery as proof of delivery. Customers who waive the signature requirement will be provided only the date of delivery in the delivery record, unless a special request for the delivery employee's signature is made. For retail labels, detach both parts of the gummed label and attach to the mailpiece. Waiver of signature is not available when Signature Confirmation is combined with other special services.

2.0 LABELS

**2.1 Types of Labels**

Mailers may use one of the three Signature Confirmation label options shown in Exhibit 2.1. Additional information may be found in a supplement to Publication 91, Delivery Confirmation Technical Guide (November 2000 edition):

a. Form 153 obtained from the post office at no charge. This form may be used only with the retail option (see Exhibit 2.1a).

[Exhibit 2.1a, PS Form 153, will be published at a later date.]

b. USPS Label 315, available at no charge to electronic option mailers (see Exhibit 2.1b).

[Exhibit 2.1b, Label 315, will be published at a later date.]

c. Privately printed barcoded labels that meet the requirements in 2.0 and 3.0 (see Exhibit 2.1c).

[Exhibit 2.1c, Privately Printed Label, will be published at a later date.]

**2.2 Label Placement**

The barcoded label section of Label 315 or Form 153 must be placed either above the delivery address and to the right of the return address or to the left of the delivery address. A privately printed Signature Confirmation label that is separate from a privately printed address label must be placed in close proximity to the address label. In all cases, the entire Signature Confirmation label must be placed on the address side of the mailpiece and not overlap any adjacent side.

3.0 BARCODES

**3.1 Symbology**

Labels printed by mailers must meet the following symbology requirements:

a. Mailers printing their own barcodes and using the retail option (1.4a) must print their barcodes using Automatic Identification Manufacturers' (AIM) Uniform Specifications for USS Code Interleaved 2 of 5.

b. Mailers printing their own barcodes and using the electronic option (1.4b) must use one of the following barcode symbologies: UCC/EAN 128, USS Code Interleaved 2 of 5, USS Code 39, or USS Code 128. Each barcode must represent a unique Package Identification Code (PIC) as specified in 3.2. The barcodes must meet the specifications in Publication 91.

**3.2 Package Identification Code (PIC)**

Each barcode symbology must represent a unique PIC:

a. For UCC/EAN 128, each barcode must represent a unique PIC and be made up of five fields totaling from 16 to 22 characters. Additional information and specifications can be found in Publication 91. The five required data fields are:

(1) Application Identifier (AI): two characters; identifies the barcode as a postal barcode.

(2) Service Type Code (STC): two characters; identifies the type of product or service used for each item.

(3) Customer ID: nine characters; DUNS® number that uniquely identifies the customer.

(4) Package Sequence Number (PSN): variable from 2 to 8 numbers.

(5) Modulus 10 Check digit: one character. See Publication 91 for use of the concatenated barcode for routing purposes.

b. For USS Code Interleaved 2 of 5, USS Code 39, and USS Code 128, each barcode must contain a unique PIC and be made up of four fields totaling 20 characters. The four required data fields are fields 2 through 5 above with a fixed sequential number of 8 digits. Additional information and specifications can be found in Publication 91. These symbologies do not use an Application Identifier (AI).

**3.3 Printing**

Labels printed by mailers must meet the following specifications:

a. Each barcoded label must bear a unique Signature Confirmation PIC barcode as specified in 3.2 and have ''USPS SIGNATURE CONFIRMATION'' printed between ⅛ inch and ½ inch above the barcode in minimum 12-point bold sans serif type. Human-readable characters that represent the barcode ID must be printed between ⅛ inch and ½ inch under the barcode in minimum 10-point bold sans serif type. These characters must be parsed in accordance with Publication 91. There must be a minimum of ⅛-inch clearance between the barcode and any printing. The preferred range of widths of narrow bars and spaces is 0.015 inch to 0.017 inch. The width of the narrow bars or spaces must be at least 0.013 inch but no more than 0.021 inch. All bars must be at least ¾ inch high. Bold (1/16 inch minimum) bars must appear between ⅛ inch and ½ inch above and below the human-readable endorsements to segregate the Signature Confirmation barcode from other areas of the shipping label. The line length must be equal to the length of the barcode (see Exhibit 2.1b).

b. Each barcode must meet the requirements in 3.1 for the type of service requested.

c. Mailers must obtain Postal Service certification for each printer used to print barcoded Signature Confirmation labels. For certification, a mailer must forward for evaluation and approval 20 barcoded labels/forms generated by each printer to the National Customer Support Center (NCSC), Attention Barcode Certification (see G043 for address). The Postal Service will issue the mailer a PS Form 3152, Delivery Confirmation Certification, for each printer certified. All barcodes must be in accordance with 2.0 and 3.0. Further certification instructions are included in Publication 91.

d. Barcodes that do not meet specifications will not be accepted by the USPS. The USPS will contact the mailer if problems with the barcodes are found and will try to resolve the problem. The USPS may suspend a mailer's certification if electronic file quality does not meet specifications.

e. Mailers who have previously received certification for label printing under the Delivery Confirmation program are not required to obtain any additional certification to use Signature Confirmation.

**3.4 Integrated Barcodes**

An integrated barcode may be used by mailers printing their own barcodes and using the electronic service option. Mailers may combine Signature Confirmation and insurance into a single barcode on the shipping label and eliminate multiple labels and barcodes on packages. Mailers must still meet existing specifications in 3.1 and 3.2. Minor modifications allow users to request multiple special services on Priority Mail and Package Services. Two required changes are:

a. Change the text above the barcode to identify the service requested. Exhibits are included in Publication 91, Delivery Confirmation Technical Guide, November 2000 edition (which includes the Addendum on Signature Confirmation and integrated barcode).

b. Change the service type code in the barcode to identify the class of mail and/or type of special services combined with Signature Confirmation. Additional information on the Service Type Code Matrix can be found in the Publication 91, Delivery Confirmation Technical Guide, November 2000 edition.

4.0 ELECTRONIC FILE TRANSMISSION

Mailers must meet the following standards for electronic file transmission:

a. Publication 91 contains specifications for electronic file transmission. A test file transmission must be uploaded and approved before mailings begin. Upon certification, USPS will issue to the mailer a Form 3152, Delivery Confirmation Certification.

b. Mailers using the electronic option will be required to transmit a file with a unique record for each article mailed. The USPS may suspend a mailer's certification if the electronic file quality does not meet specifications. In addition, USPS acceptance units will be notified to charge the customer the retail option Signature Confirmation fee.

c. Mailers who have previously received certification for electronic file transmission under the Delivery Confirmation program are not required to obtain any additional certification for Signature Confirmation service use.

d. Mailers using the electronic option are required to include additional fields in the electronic file when planning to use the integrated barcode. For more information, consult Publication 91.

5.0 ACCEPTANCE

Customers must meet the following requirements when presenting electronic option Signature Confirmation mail for acceptance:

a. Presorted or permit imprint mailings containing pieces for which fees are paid for Signature Confirmation service must be presented to a post office business mail entry unit (BMEU), detached mail unit (DMU) at the mailer's plant, bulk mail center or auxiliary service facility business mail entry unit, or other postal facility capable of properly verifying the mailing and at which the mailer has obtained the necessary permits or license and paid any applicable mailing fee.

b. Mailers who use the electronic option must submit a completed Form 3152 with each mailing. Each Form 3152 must contain the electronic file number or barcode equivalent, date of mailing, and, if available, the total number of pieces by class of mail. The barcode format must comply with standards in Publication 91.

*S920 Convenience*

*S921 Collect on Delivery (COD) Mail*

1.0 BASIC INFORMATION

**1.1 Description**

[Amend 1.1 to show the new $1,000 limit for COD to read as follows:]

Any mailer may use collect on delivery (COD) service to mail an article for which the mailer has not been paid and have its price and the cost of the postage collected from the recipient. If the recipient pays the amount due by check payable to the mailer, the USPS forwards the check to the mailer. If the recipient pays the amount due in cash, the USPS collects the money order fee(s) from the recipient and sends a postal money order(s) to the mailer. The amount collected from the recipient may not exceed $1,000. COD service provides the mailer with a mailing receipt, and a delivery record is maintained by the Postal Service.

[Amend 1.2 by replacing ''Standard Mail (B)'' with ''Package Services'' and ''Special Standard Mail'' with ''Media Mail''; no other changes to text.]

* * * * *

[Amend title of 1.4 by replacing ''Other'' with ''Additional'' to read as follows:]

**1.4 Additional Services**

[Amend 1.4 by clarifying the text to read as follows:]

Purchasing COD service allows customers to then purchase restricted delivery service or a return receipt. The following additional services may be combined with COD if the applicable standards for the services are met and the additional service fees are paid:

a. Delivery Confirmation (not available with Express Mail COD).

b. Registered mail.

c. Signature Confirmation.

d. Special handling.

* * * * *

[Effective November 5, 2000, the Postal Service completely rewrote DMM standards for business reply mail (see Postal Bulletin 22035 (10–19–00), available via www.usps.com). This rewrite was done for clarity and consistency. Therefore, standards for business reply mail in this final rule have been reorganized to reflect the new structure of DMM units E150, P014, R900, and S922. There have been no substantive changes to these standards since publication in the proposed rule.]

*S922 Business Reply Mail (BRM)*

* * * * *

3.0 POSTAGE, PER PIECE CHARGES, AND ACCOUNTING FEES

* * * * *

**3.3 Annual Accounting Fee and Advance Deposit Account**

[Amend 3.3 to show that BRM no longer requires a unique advance deposit account:]

A permit holder may choose to pay an annual accounting fee and establish an advance deposit account, which qualifies returned BRM pieces for the high-volume per piece charge. The accounting fee must be paid once each 12-month period at each post office where a permit holder holds an advance deposit account. Payment of the accounting fee is based on the anniversary date of the initial payment. The fee may be paid in advance only for the next 12-month period and only during the last 60 days of the current 12-month period. The fee charged is that which is in effect on the date of payment. An advance deposit account can be used for BRM under these conditions:

* * * * *

7.0 ADDITIONAL STANDARDS FOR QUALIFIED BUSINESS REPLY MAIL (QBRM)

* * * * *

[Add new 7.7 and 7.8 for the quarterly fee to read as follows:]

**7.7 Quarterly Fee for High-Volume QBRM**

Mailers may choose to pay a quarterly fee in addition to the annual accounting fee; payment of the quarterly fee entitles mailers to a lower per piece charge (the high-volume QBRM per piece charge listed in R900.4.4). The quarterly fee (and annual accounting fee) must be paid at each post office where mail is returned and for each separate billing desired. Mailers are committed to the ''quarterly fee system'' only for the time they pay the quarterly fee (*i.e.,* mailers can opt out of the quarterly fee and high-volume QBRM per piece charges by simply not paying the fee for the next quarter). The quarterly fee cannot be paid or renewed retroactively to receive a lower per piece charge on pieces already paid for and delivered. The quarterly fee can be paid for any three consecutive calendar months.

**7.8 Payment Period for Quarterly Fee**

The quarterly fee must be paid in advance for at least one but no more than four quarterly periods. A quarterly period begins on either the first day of the month (if a mailer pays on or before the 15th of the month) or the first day of the following month (if a mailer pays after the 15th of the month) and continues for three consecutive calendar months. A mailer who pays the quarterly fee is entitled to the high-volume QBRM per piece charge from the date of payment through the end of the quarterly period. The fee paid is that which is in effect on the date of payment.

* * * * *

*S923 Merchandise Return Service*

1.0 BASIC INFORMATION

**1.1 Description**

[Amend 1.1 by replacing ''Standard Mail (B)'' with ''Package Services'' and ''Special Standard Mail'' with ''Media Mail'' and by deleting references to the per piece fee to read as follows:]

Merchandise return service allows an authorized permit holder to pay the postage and special service fees on single-piece rate First-Class Mail, Priority Mail, and Package Services parcels that are returned to the permit holder by the permit holder's customers via a special label produced by the permit holder.

* * * * *

**1.3 Payment Guarantee**

[Revise 1.3 to read as follows:]

The permit holder guarantees payment of the proper postage and special service fees (except for insurance purchased by the sender) on all parcels returned via a special label produced by the permit holder.

* * * * *

**1.8 Priority Mail Reshipment**

[Amend 1.8 by replacing ''Standard Mail'' with ''Package Services''; no other changes to text.]

* * * * *

**1.11 Mailer Markings and Endorsements**

[Amend 1.11 to show that unmarked pieces will be treated as Parcel Post to read as follows:]

It is recommended but not required that permit holders preprint a rate marking on the merchandise return service labels they distribute. Preprinting a rate marking guarantees that returned parcels will be given service and charged postage according to the wishes of the permit holder. Regardless of weight, all unmarked parcels will be treated as Parcel Post and charged Parcel Post rates.

[Remove item 1.12.]

2.0 PERMITS

* * * * *

**2.3 Multiple Accounts**

[Amend 2.3 to clarify the reference to the annual accounting fee:]

When an advance deposit account is kept at each entry location, a separate permit is needed and the annual merchandise return service permit and annual accounting fees must be paid at each office.

* * * * *

**2.7 Permit Cancellation**

[Amend 2.7 to remove references to the per piece fee and to delete the last sentence to read as follows:]

The USPS may cancel a permit if the permit holder refuses to accept and pay postage and fees on merchandise return service parcels, fails to keep sufficient funds in the advance deposit account to cover postage and fees, or distributes merchandise return labels or tags that do not meet USPS standards.

* * * * *

[Revise 3.0 to read as follows:]

3.0 POSTAGE AND FEES

**3.1 Postage**

Merchandise return service parcels are charged single-piece rate postage and special service fees based on the class or subclass marking on the label. If a parcel is unmarked, then it is charged Parcel Post rates. If the postage for the returned parcel is zoned and there is no way to determine where it was sent from (i.e., no postmark or return address), then postage is calculated at zone 4 (for Priority Mail) or zone 4 Inter-BMC/ASF rates (for Parcel Post). Postage is deducted from an advance deposit account.

**3.2 Per Piece Charge**

There is no per piece charge for returned parcels.

**3.3 Permit Fee**

A permit fee is charged once each 12-month period on the anniversary date of the permit. The fee may be paid in advance only for the next year and only during the last 60 days of the current service period. The fee charged is that which is in effect on the date of payment.

**3.4 Advance Deposit Account and Annual Accounting Fee**

The permit holder must pay postage and special service fees through an advance deposit account and must pay an annual accounting fee (see R900). The accounting fee is charged once each 12-month period on the anniversary date of the initial accounting fee payment. The fee may be paid in advance only for the next year and only during the last 60 days of the current service period. The fee charged is that which is in effect on the date of payment. A separate advance deposit account for MRS is not required; the annual accounting fee is charged if MRS postage and fees are paid from an existing account.

a. For each withdrawal, only one statement is provided for each annual accounting fee paid.

b. The permit holder must pay an annual accounting fee for each separate statement (accounting) requested. If only one annual account fee is paid, then the permit holder receives only one statement.

4.0 ADDITIONAL FEATURES

[Amend heading of 4.1 by adding ''Indicated by Permit Holder'' to read as follows:]

**4.1 Insurance Indicated by Permit Holder**

[Amend 4.1 by clarifying text to read as follows:]

The permit holder may obtain insured mail service with MRS. Only Package Services matter (i.e., matter not required to be mailed at First-Class Mail rates under E110) may be insured. Insured mail may be combined with Delivery Confirmation and special handling, or both. To request insured mail service, the permit holder must preprint or rubber-stamp ''Insurance Desired by Permit Holder for $____(value)'' to the left of and above the ''Merchandise Return Label'' legend and below the ''Total Postage and Fees Due'' statement on the merchandise return label. The value part of the endorsement, showing the dollar amount of insurance for the article, may be handwritten by the permit holder. If insurance is paid for by the MRS permit holder, then only the MRS permit holder may file a claim (S010).

[Remove current 4.2. Add new 4.2 to read as follows:]

**4.2 Insurance Added by Sender**

If the permit holder has not indicated insured mail service on the MRS label, then the sender has the option of adding insurance and paying the applicable insured fee. If insurance is paid by the sender, then only the sender may file a claim (S010). The permit holder pays postage upon receipt, but does not pay the insured fee when insurance is added by the sender.

[Revise the title of 4.3 to read ''Insured Markings''; no other changes to text.]

* * * * *

5.0 FORMAT

* * * * *

**5.6 Format Elements**

[Amend 5.6 by revising 5.6c to clarify that rate markings are optional on MRS labels.]

Format standards required for the merchandise return label are shown in Exhibit 5.6a, Exhibit 5.6b, Exhibit 5.6c, and Exhibit 5.6d, and described as follows:

* * * * *

c. Rate Marking. If the rate marking recommended in 1.11 is used, it must be placed in the space to the right and above the ''Merchandise Return Label'' legend. The marking must be at least 3/16 inch high and printed or rubber-stamped. Only the permit holder may apply this marking.

* * * * *

[Amend the postage and fee markings shown in 5.6d(2) to remove the entry for the merchandise return service fee.]

[Amend the postage and fee markings shown in 5.6e(2) to remove the entry for the merchandise return service fee.]

[Amend Exhibits 5.6a, 5.6b, 5.6d, and 5.6c to remove the entry for the merchandise return service fee.]

* * * * *

*S924 Bulk Parcel Return Service*

1.0 BASIC INFORMATION

**1.1 Description**

[Amend 1.1 to change ''Standard Mail (A)'' to ''Standard Mail'' and to add payment information:]

Bulk parcel return service (BPRS) allows mailers of large quantities of Standard Mail machinable parcels that are either undeliverable-as-addressed or opened and remailed by addressees to be returned to designated postal facilities. The mailer has the option of picking up all returned parcels from a designated postal facility at a predetermined frequency specified by the Postal Service or having them delivered by the Postal Service in a manner and frequency specified by the Postal Service. For this service a mailer pays an annual permit fee and a per piece charge for each parcel returned. Payment for the returned pieces is deducted from an advance deposit account.

**1.2 Availability**

[Amend 1.2 by replacing ''Standard Mail (A)'' with ''Standard Mail'' and ''Standard Mail (B)'' with ''Package Services'' in 1.2i; no other changes to text.]

* * * * *

[Add new 1.4 to indicate that bulk parcel return service cannot be used with special services to read as follows:]

**1.4 Special Services**

Special services cannot be added to pieces returned via bulk parcel return service.

* * * * *

[Amend 3.0 by replacing ''Postage'' with ''Charges'' to read as follows:]

3.0 CHARGES AND FEES

* * * * *

[Renumber current 3.2 as 3.5. Add new 3.2 through 3.4 to clarify the per piece charges and to describe the new annual accounting fee to read as follows:]

**3.2 Per Piece Charge**

Each piece returned through BPRS is charged only the per piece charge in R900. Postage is not charged for pieces returned through BPRS.

**3.3 Advance Deposit Account**

The permit holder must pay BPRS fees through an advance deposit account and pay an annual accounting fee (see

R900). This fee covers the administrative cost of maintaining the account and provides the mailer with a single accounting of all charges deducted from that account. The accounting fee is charged once each 12-month period on the anniversary date of the initial accounting fee payment. The fee may be paid in advance only for the next year and only during the last 60 days of the current service period. The fee charged is that which is in effect on the date of payment.

**3.4 Existing Advance Deposit Account**

A separate advance deposit account for BPRS is not required; the annual accounting fee is charged if BPRS postage and fees are paid from an existing account.

[Amend the title and content of renumbered 3.5 to clarify the payment guarantee to read as follows:]

**3.5 Payment Guarantee**

The permit holder guarantees payment of all applicable fees. The post office returns BPRS items to the permit holder only when there are sufficient funds in the advance deposit account to pay the fees on returned pieces.

* * * * *

5.0 FORMAT

[Amend Exhibit 5.0 to change the class marking to ''Standard Mail.''] * * * * *

**5.4 Class Endorsement**

[Amend 5.4 to change ''STANDARD MAIL A'' to ''STANDARD MAIL.'' No other changes to text.]

* * * * *

*S930 Handling*

1.0 SPECIAL HANDLING

* * * * *

**1.2 Availability**

[Amend 1.2 by replacing ''Standard Mail (B)'' with ''Package Services'' and ''Special Standard Mail'' with ''Media Mail''; no other changes to text.]

**1.3 Additional Services**

[Amend 1.3 to clarify the opening sentence, to change ''Standard Mail (B)'' to ''Package Services,'' and to add Signature Confirmation to read as follows:]

The following special services may be combined with special handling if the applicable standards for the services are met and the additional service fees are paid:

a. COD.
b. Delivery Confirmation.
c. Insurance.
d. PAL (for Package Services only).
e. Return receipt for merchandise.
f. Signature Confirmation.

* * * * *

[Add new 1.7 to clarify that the nonmachinable surcharge is not charged on pieces sent special handling:]

**1.7 Nonmachinable Parcels**

The Parcel Post nonmachinable surcharge is not charged on parcels sent special handling.

2.0 PARCEL AIRLIFT SERVICE (PAL)

* * * * *

[Amend 2.2 by replacing ''Standard Mail (B)'' with ''Package Services''; no other changes to text.]

**2.3 Additional Services**

[Amend 2.3 to clarify the opening sentence to read as follows:]

The following special services may be combined with PAL if the applicable standards for the services are met and the additional service fees are paid:

* * * * *

An appropriate amendment to 39 CFR 111 to reflect these changes will be published.

**Stanley F. Mires,**

*Chief Counsel, Legislative.*

[FR Doc. 00–31357 Filed 12–14–00; 8:45 am]

BILLING CODE 7710–12–P

Federal Register

Friday,
December 15, 2000

# Part III

# Federal Reserve System

## 12 CFR Part 203

## Home Mortgage Disclosure; Proposed Rules

**FEDERAL RESERVE SYSTEM**

**12 CFR Part 203**

**[Regulation C; Docket No. R–1001]**

## Home Mortgage Disclosure

**AGENCY:** Board of Governors of the Federal Reserve System.

**ACTION:** Proposed rule; proposed staff interpretation.

**SUMMARY:** The Board is proposing amendments to Regulation C (Home Mortgage Disclosure) and to the commentary that applies and interprets Regulation C. These amendments would simplify the definition of a ''refinancing,'' require lenders to report requests for preapproval, simplify the definition of a reportable home improvement loan, require lenders to report home-equity lines of credit, expand coverage of nondepository lenders, and require lenders to report the annual percentage rate of a loan, whether the loan is subject to the Home Ownership and Equity Protection Act, and whether the loan or application involves a manufactured home. The Board also proposes to reorganize the regulation and to make other changes.

**DATES:** Comments must be received by March 9, 2001.

**ADDRESSES:** Comments directed to the Board should refer to Docket No. R–1001 and may be mailed to Jennifer J. Johnson, Secretary, Board of Governors of the Federal Reserve System, 20th Street and Constitution Avenue, N.W., Washington, D.C. 20551, or mailed electronically to regs.comments@federalreserve.gov. Comments addressed to Ms. Johnson may be delivered to the Board's mail room between 8:45 a.m. and 5:15 p.m., and to the security control room at all other times. Both the mail room and the security control room are accessible from the courtyard entrance on 20th Street between Constitution Avenue and C Street, N.W. Members of the public may inspect comments in room MP–500 of the Martin Building between 9:00 a.m. and 5:00 p.m. on weekdays.

**FOR FURTHER INFORMATION CONTACT:** John C. Wood, Counsel, James H. Mann, Senior Attorney, or Kathleen C. Ryan, Senior Attorney, Division of Consumer and Community Affairs, Board of Governors of the Federal Reserve System, Washington, D.C. 20551, at (202) 452–3667 or (202) 452–2412. For users of Telecommunications Device for the Deaf (TDD) *only,* contact Janice Simms at (202) 452–4984.

**SUPPLEMENTARY INFORMATION:**

### I. Background on HMDA and Regulation C

The Home Mortgage Disclosure Act (HMDA) requires depository and certain for-profit, nondepository institutions to collect, report, and disclose data about originations and purchases of home mortgage and home improvement loans. Institutions must also report data about applications that do not result in originations.

The Board's Regulation C implements HMDA. Regulation C generally requires that institutions report data about:

- *Each application or loan,* including the application date; the action taken and the date of that action; the loan amount; the loan type and purpose; and, if the loan is sold, the type of purchaser;
- *Each applicant or borrower,* including national origin or race, gender, and annual income; and
- *Each property,* including occupancy status and location.[1]

HMDA data can be used to help determine whether institutions are serving the housing needs of their communities. The data help public officials target public investment to attract private investment where it is needed. HMDA data also assist in identifying possible discriminatory lending patterns and in enforcing antidiscrimination statutes.

### II. The Board's Review of Regulation C

The Board reviews its regulations periodically to identify ways to clarify and simplify the regulatory language; respond to technological and other developments; reduce undue regulatory burden on the industry; delete obsolete provisions; and improve the quality and usefulness of the data. The review of Regulation C began in March 1998 when the Board published an Advance Notice of Proposed Rulemaking (Advance Notice; 63 FR 12329 (March 12, 1998)). In the Advance Notice, the Board identified several possible areas for revision, including: reporting requests for preapproval; exempting loans acquired in a branch acquisition; reporting construction loans and other temporary financing; revising the definitions of reportable refinancings and home improvement loans; reporting manufactured home loans as a separate category; and requiring lenders to report additional data, such as reasons for denial and the appraised value of the property securing a loan. The Board received approximately 100 comment letters. Most commenters addressed only the issues identified in the Advance Notice.

The Board has received many suggestions on how it might use its authority under HMDA to increase understanding of the mortgage markets and to assist in fair lending enforcement. These suggestions have been the main focus of the Board's comprehensive review of the regulation and of its development of proposed revisions.

Other suggestions for change related to increased public and agency concerns about ''predatory lending'' practices.[2] Some of them were presented in *Curbing Predatory Home Mortgage Lending,* a report by the Department of Housing and Urban Development and the Department of the Treasury submitted to the Congress in June 2000 (HUD/Treasury Report). These suggestions include requiring reporting of the interest rate on a loan, the fees associated with a loan, whether a loan is subprime, and the applicant's credit score, debt-to-income ratio, and age. The Board received other suggestions at hearings on possible changes to the Home Ownership and Equity Protection Act (HOEPA) held in Charlotte, Boston, Chicago, and San Francisco. *See* 65 FR 42889 (July 12, 2000).[3]

The Board has analyzed the suggestions received from these and other sources—focusing on whether the likely benefits from each suggestion exceed the probable burdens. In the review of possible changes to Regulation C, the Board's staff met with a wide range of interested parties, including industry and consumer representatives, and officials of financial regulatory and

[1] Institutions report these data to their supervisory agencies on an application-by-application basis using a register format. Institutions must make their loan/application registers available to the public, with certain fields redacted to preserve applicants' privacy. The Federal Financial Institutions Examination Council (FFIEC), on behalf of the supervisory agencies, compiles the reported data and prepares an individual disclosure statement for each institution, aggregate reports for all covered institutions in each metropolitan area, and other reports. These disclosure statements and reports are also available to the public.

[2] While no precise definition of this term exists, predatory lending can be regarded as lending activities that, for example, involve targeting financially unsophisticated homeowners—frequently those having significant equity in their homes—for loans with high rates and fees and with repayment terms that are difficult or impossible to meet, thus putting their homes at risk. In addition, fraud or unlawful representations by brokers or lenders are often features of predatory lending.

[3] In 1994, HOEPA amended the Truth in Lending Act. 15 U.S.C. § 1601 *et seq.* The Act restricts certain loan terms, such as balloon payments in home-equity loans, where (1) the APR exceeds by more than 10 percentage points the yield on Treasury securities of comparable maturity to the loan, or (2) the total points and fees payable by the consumer exceed the greater of 8 percent of the loan amount or a dollar figure that is adjusted annually (currently $451).

fair lending enforcement agencies. The Board's analysis of possible changes has been guided by consideration of the purposes of the statute. In each case, the Board has considered whether changes to Regulation C could be proposed that might help the public and the regulatory agencies to better understand the mortgage markets, in light of changes that have been taking place in the past decade. The Board gave special attention to data associated with the subprime market—given that this sector has grown substantially in recent years and also in light of concerns that it is the market sector in which predatory lending practices appear more likely to occur.

The Board has considered carefully the many suggestions for amendments to Regulation C that have been received. This proposal reflects the Board's initial determination that Regulation C should be amended to reflect some of the suggestions but not others. Both types of suggestions are discussed below. The Board would find it helpful, in formulating a final rule, for the public to rank all these suggestions in two ways: First, by the importance or utility of the additional or revised data that would be reported; and second, by the cost of collecting and reporting those data.

Accordingly, based on the comments and on its own analysis, the Board is proposing certain changes to Regulation C. Each of the Board's proposals directly addresses one or more of HMDA's purposes, which include helping to determine whether financial institutions are serving the housing needs of their communities and assisting in fair lending enforcement.

The proposed changes pertaining to the coverage of transactions would broaden the data available on the home mortgage market generally and on the subprime market in particular; they would also reduce inconsistencies among the data reported. One recommended change would expand the coverage of nondepository lenders. Specifically, the Board proposes:

• *Simplifying the definition of a ''refinancing.''* The current definition offers lenders several options for deciding which refinancings to report; the proposed simplification would establish a definition applicable to all lenders. This would generate more complete and consistent data.

• *Requiring lenders to report requests for preapproval.* The rule proposed would capture requests for preapproval that are applications for credit, which are covered by the act. Requests for preapproval have been excluded from reporting under HMDA because of earlier concerns about how to differentiate between applications for credit and requests for prequalification. Defining coverage narrowly would limit compliance burden.

• *Simplifying the definition of a reportable home improvement loan.* In a change to the present reporting system, all loans for the purpose of home improvement would be reported; currently, lenders may exclude them if they do not classify them as home improvement loans. This would produce more consistent data.

• *Requiring lenders to report home-equity lines of credit.* The reporting of home-equity lines of credit, which is now optional, would become mandatory. Research by Board staff has shown that most home-equity lines of credit are used in part for home improvement purposes, so mandatory coverage would provide more complete information about the home improvement market. Gathering information about home improvement loans has been required by HMDA since its enactment in 1975.

• *Expanding coverage of nondepository lenders.* Nondepository lenders are particularly active in the subprime market. The Board proposes adding a dollar-volume threshold of $50 million to the current loan-percentage test to better ensure that all significant lenders are covered.

The Board's proposals would also require lenders to report additional items of data that would enhance understanding of the home mortgage market generally and the subprime market in particular. Capturing these data would also assist fair lending enforcement. Specifically, the Board proposes requiring institutions to report:

• The annual percentage rate (APR) of the loan and whether the loan is subject to HOEPA; and

• Whether the loan or application involves a manufactured home.

The Board has grouped under a single section (4(a)(9)) its proposals to require lenders to report additional data that it believes will help enhance public understanding of the home mortgage lending market in general and the subprime market in particular. In addition, as discussed under that section, the Board solicits comment on three other items of information (although it is not proposing their collection at this time): the reasons why a loan application was denied, the loan-to-value ratio (LTV), and the identity of an institution's parent company, if any.

Clarifying the definitions of refinancings and home improvement loans (including mandating the coverage of home-equity lines of credit) is necessary if those categories of HMDA data are to be made useful to the agencies and the public. Covering requests for preapproval is necessary to fully implement the statutory coverage of an ''application'' for credit. The narrowly drawn definition should mitigate the burden caused by the change. Amending the coverage test applicable to nondepository lenders will better ensure that significant participants in the mortgage market report under HMDA. The recommendations to require the reporting of pricing information and manufactured home status would produce data useful for fair lending analysis and helpful in understanding the subprime market. To reduce burden, these recommendations leverage existing regulatory definitions or requirements.

Some of the proposed changes have been under consideration for several years. For example, the Board has recognized for some time that the analysis of aggregate data on certain metropolitan areas is complicated by the lack of separate reporting of manufactured home transactions, which have underwriting standards significantly different from those of transactions involving site-built homes. The Board has waited to propose the separate reporting of these loans, together with other revisions, so that lenders could make all upcoming changes to their software and data collection systems at one time and minimize disruption.

There are many data collections suggested by other agencies and the public that, after careful consideration, the Board is not proposing; some of these include, for example, the credit score of the applicant, and certain loan terms, such as balloon payments. Generally, the Board determined—in the context of other changes being proposed—that in these and other cases a requirement to collect the additional data entailed burden not clearly justified by the resulting benefits. In some cases, the Board is proposing alternatives that the Board believes would generate greater benefits with less burden.

The Board believes that, taken as a whole, the proposed changes to Regulation C strike an appropriate balance between benefit and burden. The Board took account of the fact that the proposals cannot be evaluated in isolation, but must be assessed in the context of reporting requirements under other applicable laws and regulations.

The Board's proposal reflects its initial assessment on the merit of potential changes identified by the

public and the Board's own internal review. The Board solicits the public's views on whether there are other ways in which to implement the proposed changes that would further lessen and mitigate the anticipated burden, on all other aspects of the proposed changes, and on any other issues that might warrant further review. The Board also would find it helpful, in formulating a final rule, for commenters to rank all the proposed and suggested changes on which they are commenting in two ways: first, by the importance or utility of the additional or revised data that would be reported; and second, by the relative cost or burden of collecting and reporting these data.

*Solicitation of Comment on Alternative System of Categorizing Loans*

The Board solicits comment, as discussed below, on proposals to revise the definition of loan categories reported under HMDA. In addition, the Board solicits comment on an alternative system for categorizing loans. Under the current regulation, the categories of loans reported are (1) home purchase loans, (2) home improvement loans, and (3) refinancings. An alternative approach to categorizing loans would require the reporting of more loans, but would simplify the process for determining which loans must be reported. It could also facilitate some depository institutions' reporting of data for purposes of the Community Reinvestment Act of 1977 (CRA; 12 U.S.C. 2901 *et seq.*). It would potentially limit the additional burden for depository institutions because of its similarity to categories familiar to them from the Call Report or the Thrift Financial Report.[4] The Board specifically solicits public comment on whether lenders would experience more burden than benefit under this approach.

The alternative approach would eliminate refinancings and home improvement loans (except for unsecured home improvement loans) as distinct categories.[5] Instead, the categories reported would be (1) home purchase loans (subdivided into first and junior liens), (2) other mortgage loans (similarly subdivided), (3) home-equity lines of credit, and (4) unsecured home improvement loans. The alternative approach would cover the mortgage lending market more fully than either the current regulation or the proposed revision—for example, by capturing closed-end home-equity loans that are not made for home improvement purposes.

## III. Discussion of Proposed Revisions

The following discussion generally tracks the regulation (including its appendices) as the Board proposes to reorganize it. Proposed revisions to the staff commentary are addressed under the sections of the regulation that they interpret. Also discussed under the pertinent sections are issues regarding which the Board does not propose any revision. Proposed conforming and non-substantive changes to the regulation and commentary generally are not separately discussed. A few particularly significant features of the proposed reorganization are discussed specifically.

*Section 203.2—Definitions*

*2(b) Application*

*Requests for preapproval.* A consumer who wants to purchase a dwelling may request a lender to provide a ''preapproval'' or commitment, based on a comprehensive underwriting, to make a mortgage loan once the consumer identifies an acceptable property.[6] Regulation C currently instructs lenders not to report these requests. Under the present rule, if a request for preapproval ultimately results in an origination, it is the origination, not the preapproval, that is reported. Requests for preapproval disposed of in other ways—for example, those that are denied—go unreported.

The Advance Notice asked how requests for preapproval should be defined in the event they are covered. One option presented was to direct lenders to report all requests for credit that, in the case of denials, trigger an adverse action notice under Regulation B (Equal Credit Opportunity). These include all requests regarding which: (1) The creditor evaluates information about the consumer; (2) decides to decline the request; and (3) communicates the decision to the consumer. Some commenters believed that, assuming the Board amended Regulation C to cover requests for preapproval, parallel coverage under both regulations would reduce compliance burden. Other commenters countered that adopting the Regulation B approach would distort the data, capturing denied requests but not requests that are approved but do not lead to an origination.

The issue is whether a consumer who asks for preapproval has filed a credit application or whether a preapproval is a preliminary exercise. In August 1999, the Board published a proposed rule under Regulation B. 64 FR 44582 (August 16, 1999). The proposal revised the term ''application'' to include requests for preapproval made under procedures in which a creditor issues creditworthy persons a written commitment to extend credit that may be limited in three ways: (1) The lender specifies the maximum amount of credit that it commits to extend; (2) the lender specifies the period of time during which the commitment remains valid; and (3) the commitment may be subject to conditions.

Based on public comment and on further analysis, the Board proposes to cover requests for the preapproval of home purchase loans under Regulation C using the same definition as in the Regulation B proposal of August 1999. Under this approach, only a limited number of highly-structured preapproval programs would be covered—those most like programs involving traditional mortgage applications. The proposal would not cover more informal prequalification programs in which the underwriting may be less rigorous and the lender makes no binding, written commitment.

The statute requires that lenders report loan applications. The Board believes—in this context as under Regulation B—that requests for preapproval, defined in the fashion proposed, represent applications and thus should be reported. Moreover, requests for preapproval are an increasingly prevalent feature of the home mortgage lending process, and the proposed change would provide data about this developing part of the market. And although information about denied requests for preapproval would not include the property location, information about the race or national origin and gender of the applicant could be useful in fair lending enforcement.

The narrow scope of the proposed definition would promote the consistency and accuracy of the data collected—for example, all the data

[4] The Call Report categories include first lien closed-end mortgage loans, junior lien closed-end mortgage loans, open-end mortgage loans (that is, home-equity lines of credit), and unsecured consumer loans, subdivided into open-end and closed-end loans. The Thrift Financial Report is similar, but does not subdivide closed-end mortgage loans into first and junior liens, and shows unsecured home improvement loans as a subdivision of unsecured closed-end consumer loans. Refinancings are not treated as a separate category in the Call Report or Thrift Financial Report.

[5] HMDA defines a loan subject to reporting as ''a loan which is secured by residential real property or a home improvement loan,'' implying that unsecured home improvement loans are covered by the statute.

[6] Requests for preapproval are to be distinguished from requests for ''prequalification.'' The latter generally involve a cursory review of the consumer's creditworthiness; they do not result in a conditional commitment to extend credit.

would include information about the amount of the commitment. The proposed definition would also avoid affecting home-ownership counseling programs, which typically do not involve a credit decision by a lender.

The Board considered whether to propose requiring lenders to differentiate requests for preapproval from other applications—for example, through a separate code—or to distinguish actions taken on requests for preapproval from actions taken on other applications. The Board believes the resulting burden would likely exceed the value of these data. The Board does solicit comment, however, on whether lenders should use separate codes to identify requests for preapproval and the actions taken on them.

*Other matters.* The current definition of an ''application'' refers to requests for credit made in accordance with ''procedures established by a financial institution.'' To conform to the Board's proposed revision to Regulation B, the definition would be revised to refer to ''procedures used by a financial institution.'' This would focus the definition on what institutions actually do, rather than what their procedures state.

*2(d) Dwelling*

The Board proposes to clarify, through the staff commentary, that the term ''dwelling'' does not apply to transitory residences such as college dormitories. This responds to requests that the Board clarify the meaning of the term ''dwelling.''

*2(e) Financial Institution*

*Scope of coverage.* HMDA defines a covered nondepository lender as ''any person engaged for profit in the business of mortgage lending.'' Congress added this language to the statute in a 1989 amendment that for the first time brought unaffiliated nondepository mortgage lenders within the scope of HMDA.

To implement the statutory language, the Board adopted a coverage test focusing on a lender's home purchase mortgage lending as a proportion of its overall lending volume. Specifically, a nondepository mortgage lender is covered if in the preceding year its home purchase loan originations, including refinancings of home purchase loans, equaled or exceeded 10 percent of all its loan originations (by dollar volume).[7] The Board intended this test to avoid coverage of lenders that, although making some mortgage loans, arguably were not engaged ''in the business of'' mortgage lending.

The Board has noted for some time that this test exempts lenders originating large volumes of home purchase loans, when more than 90 percent of their originations involve credit card loans or other non-home purchase products. The HUD/Treasury Report recommended the modification or elimination of the 10 percent test.

The Board proposes to preserve the existing test, while adding a dollar-volume threshold for home purchase loan originations (and refinancings) to ensure coverage of nondepository lenders that are significant participants in the home mortgage market. Specifically, a nondepository lender would be required to report HMDA data if its prior-year home purchase loan originations, including refinancings of home purchase loans, equaled or exceeded $50 million, even if they did not equal or exceed 10 percent of total originations.

The average amount of a home purchase loan reported under HMDA is about $120,000, so a lender with annual home purchase originations (including refinancings) of $50 million would have originated between 400 and 500 loans. Among mortgage lenders covered in 1999, approximately half reported originations of $50 million or less. This suggests that a coverage threshold of $50 million is a reasonable test of whether such a lender is ''engaged * * * in the business of mortgage lending.'' The Board solicits comment on whether $50 million is an appropriate threshold.

*Other matters.* As part of the reorganization of the regulation, coverage criteria that currently appear in section 203.3—''Exempt Institutions''—would be consolidated under the definition of ''financial institution'' in section 203.2(e). Correspondingly, several staff comments that now appear under section 203.3 would appear instead under section 203.2(e).

*2(f) Home-Equity Line of Credit*

The Board proposes to define a home-equity line of credit as an open-end credit plan (as defined by Regulation Z) secured by a dwelling. This is substantially consistent with the definition that the Board has long applied informally.

*2(g) Home Improvement Loan*

The Advance Notice solicited comment on whether the reporting categories currently in use should be modified to simplify compliance and improve the usefulness of the data. The Board received a range of responses. Some suggested that the Board change the existing categories—for example, by eliminating the requirement to report home improvement loans, or by eliminating the portion of the definition relating to how a lender classifies the loan. Others suggested replacing the existing home improvement and refinancing categories with a single category consisting of all nonpurchase loans secured by a dwelling.

The Board proposes limited changes to the home improvement category, as discussed below.

*Classification.* Regulation C defines a home improvement loan as any loan classified as such by the lending institution and any part of whose proceeds are to be used for the improvement of a dwelling or the related real property. This definition was intended to minimize burden by not requiring institutions to determine whether a loan is a home improvement loan for HMDA purposes if the loan is classified otherwise by the institution. For example, a lender that makes home improvement loans on an installment basis, and classifies them as installment loans (without differentiating between home improvement loans and loans for other purposes) is not required to report those home improvement loans under HMDA.

The resulting data have proven to be of limited usefulness to examiners, community groups, and other data users. Institutions' classification schemes differ, making the data inconsistent; and not all loans for home improvement purposes are reported because some are classified as other types of credit.

The Board proposes to drop the classification test. Instead, lenders would be required to report a loan as a home improvement loan if any part of the proceeds is to be used for home improvement, regardless of how the institution classifies the loan. In determining whether loan proceeds are intended for home improvement purposes, lenders could rely on applicants' statements, and would not be required to take any other steps to determine the purpose of the loan. For example, a lender could use a check-box on a loan application to determine

[7] In addition, under Regulation C, a nondepository lender is exempt if its total assets, combined with those of any parent corporation, were $10 million or less on the preceding December 31, and if the institution originated fewer than 100 home purchase loans (again, including refinancings of home purchase loans) in the preceding calendar year. There is also a location test, under which a nondepository lender is exempt if on the preceding December 31 it had no office in a metropolitan area, and received applications for, originated, or purchased fewer than five home purchase or home improvement loans in a metropolitan area in the preceding calendar year.

whether or not a loan is intended for home improvement purposes. (*See* proposed comment 4(a)(2)–1.)

Redefining home improvement loans as proposed would increase reporting burden by requiring lenders to report a larger number of loans. The Board believes that this compliance burden is justified by the need to make home improvement loan data more consistent, complete, and, therefore, useful. The Board solicits comment, however, on whether the benefits of the proposed change justify the added burden.

*Home-equity lines of credit.* If a home-equity line of credit is to be used for home improvement purposes, an institution currently has the option to report the amount of the line to be used for those purposes as a home improvement loan or not to report credit lines at all. Although most home-equity lines are used, at least in part, for home improvement purposes, some institutions include home-equity credit lines in their reported home improvement loan data while others do not.[8]

To improve the completeness and comparability of data when lending proceeds are used for home improvement purposes, the Board proposes to require that all applications for home-equity lines of credit be reported. Also, to facilitate comparisons between the markets for open-end home-equity lines and closed-end home improvement loans—which have distinct demographic characteristics—the Board proposes that the two products be reported separately. Accordingly, the Board proposes to exclude home-equity lines of credit from the definition of a home improvement loan, and to place them in their own category.

To simplify the reporting of home-equity lines, and to make reporting more comparable with the reporting of home improvement loans, institutions would report the full amount of a credit line, rather than seeking to ascertain the amount that the borrower intends to use for home improvement purposes. The Board solicits comment on whether this approach would, in fact, simplify reporting, as well as on the more general question of whether the benefit resulting from the proposed changes regarding home-equity lines of credit justify the burden that would result from them. *See* section 203.4(a)(2) and Appendix A, paragraphs I.A.4. and I.A.6., below.

[8] *See* Glenn B. Canner, Thomas A. Durkin, and Charles A. Luckett, ''Recent Developments in Home Equity Lending,'' *Federal Reserve Bulletin*, vol. 84 (April 1998), pp. 241–251.

*2(h) Home Purchase Loan*

A new staff comment would be added to clarify that if an institution making a first mortgage loan also makes a second mortgage loan that finances part or all of the borrower's downpayment, the institution reports each loan separately as a home purchase loan.

*2(i) Manufactured Home*

The Board proposes to add a definition of ''manufactured home.'' *See* the discussion under section 4(a)(9), below, regarding additional data items relating to the home mortgage lending market in general and the subprime market in particular.

*2(j) Metropolitan Area*

Currently, Regulation C defines ''metropolitan statistical area'' or ''MSA'' to mean a metropolitan statistical area or a primary metropolitan statistical area, as defined by the U.S. Office of Management and Budget (OMB). OMB is in the process of revising the standards for defining metropolitan areas. In August 2000, OMB published a notice and request for comment entitled ''Final Report and Recommendations From the Metropolitan Area Standards Review Committee to the Office of Management and Budget Concerning Changes to the Standards for Defining Metropolitan Areas'' (65 FR 51060 (August 22, 2000)). The report recommended that OMB adopt a new concept called a ''core based statistical area'' (CBSA) to replace the existing metropolitan statistical area and primary metropolitan statistical area concepts. CBSAs would be subdivided into two categories, ''micropolitan areas,'' which would be defined based on urban cores of 10,000 to 49,999 population, and ''metropolitan areas,'' based on urban cores of 50,000 or more population. The report further stated that, if OMB adopts the recommended standards, the first areas to be designated using the revised standards and Census 2000 data could be designated in 2003.

The Board proposes to replace the term ''metropolitan statistical area'' with ''metropolitan area.'' ''Metropolitan area'' would have the same meaning as ''metropolitan statistical area'' does currently, until such time as OMB adopts and implements revised standards for metropolitan areas; at that time, the term would refer to the areas as defined in the revised standards.

*2(k) Refinancing*

*Definition.* Regulation C requires the reporting of refinancings of home purchase and home improvement loans. The regulation defines a refinancing as a loan that satisfies and replaces an existing obligation by the same borrower.

The Board has adopted several successive approaches to determining whether an application is for the refinancing of a home purchase or home improvement loan. At one time, Regulation C permitted the reporting of refinancings only if they involved an increase in the outstanding principal. This approach did not adequately cover refinancing activity, such as rate-driven refinancings.

For some years thereafter, Regulation C provided that a loan was covered if the balance owed on the existing loan, plus the amount of new money for home purchase or home improvement purposes, exceeded half of the total new loan amount. But lenders found this computation burdensome—for example, because they were often unable to determine the portion of new money used for the specified purposes. These difficulties also impaired the accuracy and consistency of the data.

To facilitate compliance, Regulation C currently identifies four scenarios typical of the refinancing of a home purchase or home improvement loan. It allows lenders to select from among them in deciding on which refinancings to report:

(1) The existing obligation was a home purchase or home improvement loan, as determined by the lender (for example, by reference to available documents); or

(2) The applicant states that the existing obligation was a home purchase or home improvement loan; or

(3) The existing obligation was secured by a lien on a dwelling; or

(4) the new obligation will be secured by a lien on a dwelling.

This rule eases burden, but it generates inconsistent data to the extent that different lenders choose different scenarios to determine if their refinancings are to be reported. Moreover, it is impossible for the data user to know what the data represent. The proposed rule makes it more likely that the HMDA reporting will capture refinancings of loans originally for home purchase or home improvement.

In the Advance Notice, the Board solicited comment about whether changes to the refinancing category would produce more useful data, as well as whether such changes could ease compliance burden. A number of commenters suggested modifications. Some, including community groups, federal agencies, and others, contended that the existing definition does not result in the collection of useful data because the types of refinancings reported can vary widely from one

lender to another. Several financial institutions suggested dropping refinancings from coverage altogether. Others suggested permitting only those refinancings to be reported that satisfy and replace home purchase or home improvement loans, or suggested replacing the home improvement and refinancing categories with a single category consisting of all nonpurchase loans secured by a dwelling.

Based on the public comments and its own analysis, the Board proposes to revise the definition of a refinancing for reporting purposes. A refinancing would be defined as a new obligation satisfying and replacing an existing obligation by the same borrower, where both the existing obligation and the new obligation are secured by a lien on a dwelling. The proposed definition would reduce the inconsistency of refinancing data, because all lenders would report using a single two-pronged test.

This expanded reporting would entail additional burden to the extent that lenders must adopt a different regimen for identifying covered refinancings. The Board believes that the increased burden would be outweighed by benefits of more focused coverage and more consistent and complete data. The Board solicits comment, however, on whether the proposed change strikes the right balance between benefit and burden.

In addition, the Board solicits comment on whether the definition should include not only refinancings where the existing loan was a dwelling-secured loan, but in addition refinancings of unsecured debt, as long as the new loan is dwelling-secured. Under this alternative, for example, a lender that pays off a consumer's existing unsecured loan by extending a new, dwelling-secured loan to that consumer would report the new loan.

*MECAs.* The Board is not proposing any changes regarding modification, extension, and consolidation agreements (MECAs). Several commenters on the Advance Notice suggested that the Board consider treating certain MECAs as refinancings under Regulation C. MECAs substitute for traditional refinancings in some states, such as New York and Texas, to avoid mortgage recording fees and taxes. Such transactions currently are not reported because they do not meet the definition of a refinancing (satisfaction and replacement of an existing mortgage loan). Some commenters suggested that lenders should be allowed to report MECAs that are the functional equivalent of a refinancing.

The existing definition of a refinancing establishes a bright line test for reportable transactions, by defining refinancings as extensions of credit that satisfy and replace an existing loan. Covering other agreements that are ''functionally equivalent'' to refinancings would complicate the application of this test by requiring institutions and others to resolve innumerable questions about whether particular transactions are in fact functionally equivalent to refinancings. The Board believes that MECA data may be useful in certain instances, but that, under the existing loan-classification scheme, the advantages of a bright-line test for determining whether a transaction should be reported—especially in reducing compliance burden—outweigh the benefits of additional data on these transactions. Moreover, the bright-line test benefits the entire industry, whereas the benefits of a rule adapted to MECAs would be confined to a few states. Therefore, the Board does not propose to revise the definition of refinancing to include MECAs.

*Section 203.4—Compilation of Loan Data*

*4(a) Data Format and Itemization*

Consistent with the proposed revisions regarding the definitions of ''home improvement loan,'' ''refinancing,'' and ''home-equity line of credit,'' the Board proposes to revise the introductory material in section 203.4(a) so that it refers to these loan types as distinct categories.

*4(a)(1) Application Date*

The staff commentary would be revised (proposed comment 4(a)(1)-5) to clarify that the date an institution receives an application is the date on which it or its agent first takes possession of a completed copy of the application.

*4(a)(2) Type and Purpose of the Loan*

See the discussion of home-equity lines of credit under section 2(f, above.

*4(a)(5) Type of Action Taken and Date*

*Counteroffers.* The staff commentary would be revised to clarify that an institution must report a denial on the original terms requested by the applicant when the institution makes a counteroffer—such as an offer of a different amount of credit from the amount requested—and the applicant does not accept the counteroffer or fails to respond. (*See* comment 4(a)(5)–1.)

*Underwriting conditions.* The staff commentary would be revised to clarify that if an institution issues a loan approval subject to the applicant's meeting underwriting conditions and the applicant does not meet them, the institution must report the action taken as a denial. Currently, the staff commentary excludes from this rule the situation in which an approval is subject to ''customary conditions.'' Because of confusion about the scope of this term, and the impracticality of making it precise and comprehensive, the exclusion is being deleted. (*See* comment 4(a)(5)–4.)

*Other matters.* As part of the reorganization of the regulation, the Board proposes to move some material, regarding the date action is taken, from Appendix A into the staff commentary. *See* proposed comment 4(a)(5)–7.

*4(a)(7) Race or National Origin*

*See* Appendix A, paragraph I.D.3., below, regarding changes to conform to revised OMB guidance.

*4(a)(9) Additional Items*

The Board has received many suggestions that it amend Regulation C to require lenders to report additional data. The Board believes that some of the suggested additional data could be useful in helping the public and regulators to better understand mortgage lending patterns, particularly in the subprime market, and in enforcing the fair lending laws. Therefore, the Board proposes amending Regulation C to require the reporting of certain additional data, discussed below. This action would be taken pursuant to the Board's authority under section 305 of the statute to adopt new provisions to carry out the act's purposes.

*Annual percentage rate.* HMDA data currently include no information on loan pricing. The Board proposes to require that creditors report the annual percentage rate (APR) charged on a loan.

Information about the APR would permit the identification of subprime loans, which have different characteristics, such as denial rates, from other home mortgage loans. These data may also help the public and supervisory agencies identify practices that potentially raise fair lending concerns and warrant further investigation.

Some commenters recommended that the Board require lenders to identify subprime loans. The Board believes, however, that disclosure of the APR will be effective in identifying subprime loans, as these loans typically are priced higher than other loans. Disclosure of the APR would also impose less burden on lenders, given the lack of a generally accepted definition of a subprime loan. Similarly, the Board has not adopted the

recommendation that lenders be required to report the interest rate and fees on a loan. The Board believes that the APR is a better measure of the overall cost of credit than the interest rate and fees on a loan, and would impose less burden on lenders than calculating the total fees on a loan.

To minimize the burden imposed, the requirement to report the APR would apply only to loans that are covered by the Truth in Lending Act (TILA) and for which the lender is required to disclose the APR to the consumer. (For example, if the borrower withdraws an application before the lender is required to disclose the APR under Regulation Z, the lender would not be required to report the APR under Regulation C.) The APR must be calculated and disclosed by the lender to comply with TILA in any case, although software changes would be required to capture APR data for HMDA reporting purposes.

Some loans covered by HMDA, such as loans made to corporate borrowers or for multifamily properties, would not be covered by the reporting requirement because they are not subject to TILA.[9]

*HOEPA status.* Obtaining information on the volume and pattern of lending covered under HOEPA would be useful for better understanding the mortgage market, particularly the subprime market. The Board proposes to require that HMDA reporters indicate whether a loan is covered by the HOEPA provisions as implemented in Regulation Z. To limit the burden imposed, reporting of this item would be required only for the same loans that would be subject to the APR-reporting requirement (loans covered by Regulation Z and for which the lender is required to disclose an APR).

*Manufactured home status.* Currently, loans to purchase mobile and other manufactured homes are reported together with loans to purchase site-built or other types of housing. The Advance Notice solicited comment on whether the Board could improve the usefulness of the HMDA data by requiring reporters to identify transactions involving mobile homes. (The Advance Notice referred to ''mobile homes,'' which are a type of manufactured home. This proposal employs the broader term.)

Many commenters—including the federal agencies charged with enforcing the fair lending laws—believed that the Board should require creditors to distinguish loans and applications that involve manufactured homes from other transactions. These commenters contended that such a requirement would further HMDA's purpose of providing the public with data useful in identifying possible discriminatory lending patterns and in enforcing antidiscrimination statutes. Manufactured home loans are typically underwritten differently from other home mortgage loans and have different denial rates. So distinguishing manufactured home transactions, commenters believed, would help those analyzing HMDA data to determine whether a lender's high denial rates are due to its focus on manufactured home lending rather than to some potentially unlawful practice. Other commenters—such as financial institution trade associations—opposed distinguishing transactions involving manufactured homes.

Based on the comments and on its own analysis, the Board proposes to require that creditors identify manufactured home loans and applications. The proposal would identify these loans by using a widely understood definition that appears in the Department of Housing and Urban Development (HUD) regulation that establishes construction and safety standards for manufactured homes.

*Solicitation of comment on certain data collections not proposed.* The Board solicits comment on whether it should consider requiring the collection of three items that are discussed below. Their collection is not proposed at this time

*Denial Reasons.* The statute permits, but does not require, a financial institution to report the reasons why a loan application was denied. Regulation C similarly gives institutions the option to report this information, although under section 305 the Board could make such reporting mandatory.

Institutions supervised by the Office of the Comptroller of the Currency and the Office of Thrift Supervision must report denial reasons under those agencies' rules. For institutions not required to report reasons for denial, the level of reporting has varied widely by supervisory agency. For example, in 1999, denial reasons were reported for approximately 77 percent of the loan/application register entries for denied loans submitted to the Federal Deposit Insurance Corporation and for approximately 64 percent of the entries for denied loans submitted to the Board. By contrast, about 34 percent of the entries for denied loans reported to HUD included denial reasons.

Most commenters who addressed this issue—including several financial institutions, one banking trade association, regulatory agencies, and civil rights and community groups—supported requiring all institutions covered by HMDA to report reasons for denial. These commenters argued that requiring such reporting would facilitate the identification of potential discrimination, and that all lending institutions should be subject to the same rules. They pointed out that reporting denial reasons in all cases would allow better comparison of data from different lenders. They also contended that reporting denial reasons would not be burdensome, because lenders currently must provide the reasons to applicants under the Equal Credit Opportunity Act and Regulation B (or at least inform them of their right to know the reasons).

Some commenters—primarily financial institutions—opposed mandatory reporting. These commenters maintained that denial reasons are not a reliable fair lending indicator because they may oversimplify the reasons for a credit decision. Thus, these commenters contended, users of the HMDA data could be led to believe that discrimination exists when in fact it does not. Some commenters also opposed mandatory reporting on the basis of cost and burden; others argued that the requirement is unnecessary, since examiners can obtain denial reasons from loan files.

Based on the comments and on its own initial analysis of the benefit and burden of collecting and reporting denial reasons, the Board does not propose to require reporting of denial reasons under Regulation C. The Board requests comment, however, on the value of requiring these data, relative to the burden that would be imposed on lenders.

*Loan-to-Value Ratio/Appraised Value.* In the Advance Notice, the Board requested comment on whether the appraised value of the property that secures a loan should be reported. Some commenters, primarily community groups, supported requiring lending institutions to report appraised value, or related information such as LTV, noting that such information could assist in identifying discriminatory practices in the performance and use of appraisals. Commenters stated that appraisals have a significant role in credit decisions affecting low-income communities, and that discrimination involving appraisals remains difficult to document.

The majority of commenters who addressed the issue—and almost all the financial institutions that addressed it—

[9] TILA disclosure requirements apply only to loans to consumers for personal, family, or household purposes; therefore, commercial loans are excluded. In addition, several other types of credit, such as public utility credit, securities credit, and credit over $25,000 not secured by a lien on a dwelling, are exempted from TILA.

opposed a requirement to report either appraised value or LTV ratio, maintaining that the data would not be comparable, and thus not useful, due to the many different methods used for determining property value. Commenters also argued that reporting appraised value is unnecessary because examiners can get the information from loan files; that appraised value would not provide a reliable indicator of possible credit discrimination because many other factors enter into a credit decision; and that collection and reporting for appraised value would add cost and burden to HMDA compliance. Commenters noted that the information could not be reported in many instances; for example, a loan application may be denied or withdrawn before an appraisal is conducted.

The Board solicits comment on the relative merits of requiring that lenders report LTV or appraised value, in light of the potential burden imposed on institutions.

*Identity of Parent Company.* Regulation C previously required HMDA reporters to indicate the name of any parent company on the Transmittal Sheet. The requirement was eliminated a few years ago as part of a set of amendments to the regulation; at the time, the Board noted that the change would reduce burden, and that data users could ascertain the reporting institution's parent from National Information Center (NIC) data. 63 *Fed. Reg.* 52140 (September 30, 1998).

Many users of HMDA data clearly find it useful to have information on parent-subsidiary relationships included in HMDA data, rather than available only in a separate database. Although the additional reporting burden imposed by the suggested requirement would likely be minimal, there is another way to make data on parent-subsidiary relationships available without requiring any additional reporting. Board staff, in the course of processing reported HMDA data to produce the public disclosures, could add parent-subsidiary information based on NIC data. Although this option would increase the processing cost for the agencies slightly, it would avoid increasing reporting requirements for lending institutions, and would likely produce significantly more accurate and complete information on parent-subsidiary relationships. The Board requests comment on the comparative benefit and burden of requiring institutions, rather than the agencies, to provide these data.

*4(b) Collection of Data on Race or National Origin, Sex, and Income*

*4(b)(2) Optional Collection*

Regulation C currently provides, in accordance with the statute, that depository institutions with assets on the preceding year-end of $30 million or less may, but need not, collect the data on applicants' race or national origin, sex, and income. Also in accordance with the statute, Regulation C entirely exempts from coverage a depository institution with total assets on the preceding year-end at or below the threshold set annually by the Board based on changes in the Consumer Price Index for Urban Wage Earners and Clerical Workers. In 1999, the Board set this threshold at $30 million for data collection in 2000.

Thus, institutions with assets of less than $30 million are now exempt not only from collecting certain types of data, but from the entire regulation. The more limited exemption is superfluous; the Board proposes to delete it.

*4(d) Excluded Data*

*4(d)(3) Temporary Financing*

The Board is not proposing any change to this provision.

*Reporting.* Regulation C generally does not permit lenders to report temporary financing. Rather than defining temporary financing, Regulation C provides illustrations, such as bridge and construction loans. While data about some of these loans are captured when a loan is converted to permanent financing, some persons have expressed concern that construction-only loans are not being reported. Also, some institutions have requested that Regulation C include a general, precise definition of temporary financing.

The Advance Notice solicited comment on the usefulness of data on construction lending and the burden of collecting such data. A few commenters, including community groups, believed the data would be useful and encouraged coverage. These commenters noted that some institutions offer only construction loans and do not provide permanent financing. These institutions are thus unable to report significant portions of their home lending activity.

The majority of commenters on this issue, however, believed that reporting construction lending generally would be duplicative because much of the same data would be captured when the permanent loan is reported. Some commenters also expressed concern about the difficulty of reporting the required property location information for properties that may lack street addresses at the construction phase.

The Board is not proposing to cover construction loans or other temporary financing. In some cases, the data would not be duplicative—such as where a lender originates construction loans but does not offer permanent financing. But these instances appear to be relatively few. Imposing additional burden industry wide would not be justified.

*Time period.* The Advance Notice also requested comment on whether the regulation should define ''temporary loans'' in terms of a time period. Some commenters suggested various periods, ranging from no more than one year to three or more years. Others supported leaving the term defined by example. In the absence of any generally accepted timeframe for ''temporary financing,'' the Board is not proposing a ''bright-line'' definition. Instead, the regulation will continue to offer examples—such as construction financing.

*4(d)(6) Purchased Loans*

*Branch acquisition.* HMDA requires institutions to report all loans that they purchase, including loans purchased in bulk. Under the authority conferred by Section 305 of the statute, the Board has excluded loans acquired through a merger or acquisition from the reporting requirements of Regulation C. *See* 60 FR 63996 (December 11, 1995).

The Advance Notice solicited comment on whether HMDA data for loans purchased as part of a branch acquisition are useful or whether the exclusion currently allowed for loans obtained through a merger should be extended to such loans. Most commenters who addressed this issue—primarily financial institutions—believed the data would not be useful and need not be reported. These commenters argued that the purchase of a loan as part of a branch acquisition, like the purchase of loans as part of a merger, is not primarily a credit decision but rather is incidental to an investment decision—in this case, to acquire the branch. These commenters also contended that such reporting is burdensome. Some commenters, including community groups and a few financial institutions, urged the Board not to expand the merger exception because doing so would reduce the publicly available data about creditors' loan acquisitions.

Based on the comments and its own analysis, the Board proposes to exclude loans purchased as part of a branch acquisition from HMDA's reporting requirements. A ''branch acquisition'' entails the purchase of *all* the assets and liabilities of a branch of a depository

institution; it need not involve the purchase of the branch's physical facilities. Loans purchased as part of a branch asset sale (not including sale of the branch's liabilities) would continue to be reported.

*Bulk purchases.* The Board is not proposing any change regarding bulk purchases. A number of commenters on the Advance Notice proposed excluding loans acquired through bulk purchases from the reporting requirements. However, unlike mergers and branch acquisitions, which are transactions driven by a number of factors, bulk purchases typically are based on a credit analysis of the portfolio being sold. Excluding bulk purchases, therefore, would result in the loss of data useful in determining whether institutions are serving the housing needs of their communities. Accordingly, the Board is not proposing to exclude bulk purchases.

*Purchase of ''seasoned loans.''* The Board is not proposing any changes regarding the purchase of ''seasoned loans.'' The Advance Notice solicited comment on whether other revisions regarding purchased loans could improve data quality and reduce burden. The Advance Notice referred specifically to the possible exclusion of seasoned loans—such as those originated more than one or two years before the year being reported on. Several commenters, including financial institutions and trade associations, recommended excluding loans that had been originated, for example, more than six months, one year, or two years prior to purchase. These commenters contended that purchasing such loans does not reflect credit decisions by the acquirer, but rather decisions to purchase assets. They noted that reporting such loans was burdensome since data may be incomplete and difficult to locate.

Other commenters believed that seasoned loans should be reported. These commenters (including financial institutions and community groups) noted, for example, that certain programs prohibit the sale of loans before one or two years have passed—in order to ensure the loans are performing. Some commenters expressed concern that institutions would no longer receive positive consideration for purchases of these loans under the CRA, which could reduce the loans' marketability. Certain commenters believed that the burden of tracking seasoned loans in order to exclude them could outweigh the benefits of lessened reporting requirements.

Based on the comments and on further analysis, the Board believes that data on loan purchases generally, including seasoned loans, are useful in evaluating an institution's mortgage lending activity. The Board therefore does not propose to exclude seasoned loans from the reporting requirements.

*Section 203.5—Disclosure and Reporting*

*5(b) Public Disclosure of Statement*

The regulation requires that a financial institution make its disclosure statement available to the public, under certain circumstances, within a specified number of ''business days.'' A paragraph would be added to the staff commentary to clarify that for this purpose a ''business day'' is any calendar day other than a Saturday, Sunday, or legal public holiday. (*See* proposed comment 5(b)–1.)

*5(f) Loan Aggregation and Central Depositories*

As part of the reorganization of the regulation, material on loan aggregation and central depositories that now appears in section 203.1—''Authority, purpose, and scope''—would be moved to section 203.5, as paragraph (f).

*Section 203.6—Enforcement*

As part of the reorganization of the regulation, material from the staff commentary (see comments 4(a)–1 and 6(b)–1) would be moved to this section of the regulation. This material clarifies that certain actions do not violate the act or regulation.

## IV. Appendix A

The Board's proposed reorganization of the regulation entails non-substantive revisions of Appendix A, such as redesignating several provisions. The Board also proposes certain substantive changes that would conform Appendix A to proposals discussed above.

**I. Instructions for Completion of Loan/Application Register**

*A. Application or Loan Information*

4. Purpose

*Code 5—Home-equity line of credit.* The Board is proposing to add a code identifying home-equity lines of credit. *See* discussion under section 2(f), above.

*Code 6—Manufactured home.* The Board is proposing to add a code for loans and applications involving manufactured homes. *See* the discussion of ''Manufactured home status'' under section 4(a)(9), above. A reporting entity would use this code in addition to any other code identifying the purpose of the transaction. For example, an application to purchase a single-family manufactured home would be coded as ''1, 6.''

6. Loan Amount

The Board proposes to require institutions to report the full amount of home-equity credit lines. *See* discussion under section 2(f), above.

*C. Property Location*

*Coordination with the CRA.* Appendix A provides guidance to institutions that report data under the CRA regarding the reporting of property-location information for loans located outside the metropolitan areas where those lenders have offices. In response to inquiries from lenders, the Board proposes to clarify this guidance, without changing it substantively.

These lenders must report the metropolitan area, state, and county where the property is located. In general, they must also report the census tract. However, if the property is located in an untracted area, they may report either ''NA'' or the block numbering area instead of census tract information; and if the property is located in a county with a population of 30,000 or less, a lender may report either ''NA'' or the census tract number.

*Requests for preapproval.* The Board is proposing explicitly to include certain requests for preapproval in the definition of an ''application'' for credit. *See* section 2(b), above. Since these requests would not include data on property location, the Board proposes to clarify that lenders may report ''NA'' in the property location fields associated with requests for preapproval.

*D. Applicant Information—Race or National Origin, Sex, and Income*

3. Race or National Origin of Borrower or Applicant

The Office of Management and Budget (OMB) has revised its ''Standards for Maintaining, Collecting, and Presenting Federal Data on Race and Ethnicity.'' The revised standards prescribe five racial designations: American Indian or Alaska Native, Asian, Black or African American, Native Hawaiian or Other Pacific Islander, and White. For data on ethnicity, the standards provide for data on whether individuals are Hispanic or Latino, or do not fall within this category. 62 *Fed. Reg.* 58782 (October 30, 1997). The standards require that respondents be offered the option of selecting one or more designations.

Federal agencies use these OMB standards when racial and ethnic data are collected by means of respondent self-identification or by observers. The Bureau of the Census uses these standards, for example, in its decennial and other data collections.

The Board proposes to revise Regulation C to conform to the revised OMB standards. The Board is also proposing to continue permitting institutions to report that race and ethnicity data were not provided by an applicant in a mail or telephone application, or that such data are not applicable—for example, in connection with a loan to a corporation rather than to a natural person.

5. Income

The Board is not proposing any changes regarding the reporting of applicant income.

Section 203.4(a)(7) of Regulation C provides that an institution must report the

''gross annual income relied upon in processing the application'' on its loan/application register. In some instances, institutions make credit decisions based only on the portion of an applicant's income necessary for the applicant to qualify for a loan (such as the applicant's earned income), rather than on the applicant's total annual income from all sources.

CRA examiners evaluate a large retail institution's CRA performance in part based on the number and amount of home mortgages (as reported under HMDA) that the institution makes to low-, moderate-, middle-, and upper-income individuals. 12 CFR 228.22(b)(2)(iii) and (3)(i). The CRA regulations define these income categories based on the median family income for an area, which is calculated using gross annual income. If an institution reports only part of an applicant's income on its loan/application register, the applicant may appear to be in an income category that is lower than the applicant's actual income category, thus misstating the lender's CRA performance.

Changing Regulation C, however, would impose significant burden on institutions, many of which are not subject to CRA. It is unclear whether the difference between income relied upon and total annual income is large enough to have a material impact on an assessment of an institution's CRA performance. The Board believes that given this lack of information, imposing additional burden on institutions is not warranted.

*G. Other Data*

The Board proposes to add fields regarding the APR and HOEPA status. *See* the discussion under section 4(a)(9), above, of additional items proposed for data collection.

*Form of Transmittal Sheet.* The form of transmittal sheet that accompanies the loan/application register currently calls for the telephone and facsimile numbers of the reporting institution, but not for the e-mail address. The Board proposes to require the institution to provide its e-mail address, if one exists, on the transmittal sheet, for use in contacting the financial institution.

**V. Appendix B**

Appendix B would be revised to clarify that if an application is made entirely by telephone, the reporting institution is permitted, although not required, to request data on race or national origin and sex. (Lenders are reminded, however, that these data must be requested when an application is taken over the Internet.) This clarification makes explicit the Board's longstanding views on this issue. Other changes would reflect the revised OMB guidance discussed above.

**VI. Reorganization of the Regulation**

Currently, formal guidance for compliance with HMDA is contained in Regulation C, in the instructions for completing the loan/application register (Appendix A to the regulation), in the instructions for the collection of certain applicant data (Appendix B), and in the staff commentary. Informal guidance is provided in the FFIEC's ''A Guide to HMDA Reporting: Getting It Right!'' Compliance officers and other commenters have expressed concern about having to consult several sources to locate a requirement or interpretation dealing with a particular issue.

The Advance Notice solicited comment on the benefit of incorporating all of the interpretive materials into the commentary, reducing the instructions in Appendix A to code descriptions, and reorganizing the material within the regulation. These changes were supported by most of the commenters that addressed them—including both data reporters and data users. They believed that a reorganization would make the regulation easier to understand and decrease possible misinterpretations by reporters and others. For these commenters, the benefits of simplification outweighed the burden of learning a new system of organization.

Several financial institutions opposed any changes. They considered Regulation C easy to understand and expressed concern that the benefits of reorganization did not justify the burden of relearning the regulation. A few commenters recommended streamlining the reporting requirements, rather than the interpretive material, to reduce burden.

Based on the comments and its own analysis, the Board has reorganized the regulation and commentary, eliminated redundant provisions, revised the instructions to make reporting easier, and made other changes—such as rewording some provisions—so that the regulation becomes easier to use.

The cross-references to Appendix A in the staff commentary would be deleted; they would be unnecessary in view of the simplification and reorganization of Appendix A. ''A Guide to HMDA Reporting: Getting It Right!'' will continue to be published, in a format reflecting the reorganized regulation.

Provisions of the regulation, appendices, and commentary are redesignated as indicated in the tables below. The first five tables identify redesignated provisions in the first five sections of the regulation and in the corresponding paragraphs of the staff commentary; the sixth and seventh tables identify redesignated provisions in Appendices A and B. While the tables present a substantially complete summary of the proposed reorganization, they should not be used as a substitute for a detailed comparison of the proposal with the existing regulation.

TABLE 1.—SECTION 203.1—AUTHORITY, PURPOSE, AND SCOPE

| Current | Proposed |
|---|---|
| Commentary 203.1(c)–2, 3, 4 | Regulation 203.2(k) |
| Commentary 203.1(c)–5 | Commentary 203.1(c)–2 |
| Commentary 203.1(c)–6 | Commentary 203.1(c)–3 |
| Commentary 203.1(c)–7 | Commentary 203.1(c)–4 |
| Commentary 203.1(c)–8 | Commentary 203.1(c)–5 |
| Commentary 203.1(c)–9 | Commentary 203.1(c)–6 |
| Commentary 203.1(c)–10 | Commentary 203.1(c)–7 |
| Commentary 203.1(c)–11 | Commentary 203.1(c)–8 |
| Commentary 203.1(c)–12 | Commentary 203.1(c)–9 |
| Regulation 203.1(d) | Regulation 203.5(f) |

TABLE 2.—SECTION 203.2—DEFINITIONS

| Current | Proposed |
|---|---|
| Regulation 203.2(f) | Regulation 203.2(g) |
| Regulation 203.2(g) | Regulation 203.2(h) |
| Regulation 203.2(h) | Regulation 203.2(j) |
| Commentary 203.2(e)–1 | Commentary 203.2(e)–5 |

TABLE 2.—SECTION 203.2—DEFINITIONS—Continued

| Current | Proposed |
|---|---|
| Commentary 203.2(e)–2 | Commentary 203.2(e)–6 |
| Commentary 203.2(f)–1 | Deleted |
| Commentary 203.2(f)–2 | Commentary 203.4(a)(2)–1 |
| Commentary 203.2(f)–3 | Deleted |
| Commentary 203.2(f)–4 | Deleted |
| Commentary 203.2(f)–5 | Commentary 203.2(g)–1 |
| Commentary 203.2(f)–6 | Commentary 203.2(g)–2 |
| Commentary 203.2(f)–7 | Commentary 203.4(g)(4)–2 |
| Commentary 203.2(f)–8 | Commentary 203.2(g)–3 |
| Commentary 203.2(g)–6 | Deleted |

TABLE 3.—SECTION 203.3—EXEMPT INSTITUTIONS

| Current | Proposed |
|---|---|
| Regulation 203.3(a)(1) | Regulation 203.2(e)(1) |
| Regulation 203.3(a)(2) | Regulation 203.2(e)(2) |
| Regulation 203.3(b) | Regulation 203.3(a) |
| Regulation 203.3(c)(1) | Commentary 203.2(e)–1 |
| Regulation 203.3(c)(2) | Regulation 203.3(b) |
| Commentary 203.3(a)–1 | Commentary 203.2(e)–1 |
| Commentary 203.3(a)–2 | Commentary 203.2(e)–2 |
| Commentary 203.3(a)–3 | Commentary 203.2(e)–3 |
| Commentary 203.3(a)–4 | Commentary 203.4(c)–1 |

TABLE 4.—SECTION 203.4—COMPILATION OF LOAN DATA

| Current | Proposed |
|---|---|
| Commentary 203.4(a)–1 | Regulation 203.6(b)(3) |
| Commentary 203.4(a)(2)–1 | Commentary 203.2(g)–4 |
| Commentary 203.4(a)(3)–1 | Deleted |
| Commentary 203.4(a)(3)–2 | Commentary 203.4(a)(3)–1 |
| Commentary 203.4(a)(4)–3 | Deleted |
| Commentary 203.4(a)(4)–4 | Commentary 203.4(a)(4)–3 |
| Commentary 203.4(d)–1 | Deleted |

TABLE 5.—SECTION 203.5—DISCLOSURE AND REPORTING

| Current | Proposed |
|---|---|
| Regulation 203.5(a) | Regulation 203.5(a)(1) |
| Regulation 203.5(b)(1) | Regulation 203.5(b)(2) |
| Regulation 203.5(b)(2) | Regulation 203.5(b)(3) |
| Commentary 203.5(a)–1 | Commentary 203.5(a)–4 |
| Commentary 203.5(a)–2 | Commentary 203.5(a)–5 |

TABLE 6. APPENDIX A

| Current | Proposed |
|---|---|
| I.A | Deleted |
| I.B | Deleted |
| I.C | Deleted |
| I.D | Deleted |
| I.E | Regulation 203.5(a)(2) |
| I.F | Regulation 203.3(a)(3) |
| II.A | Commentary 203.5(a)–1 |
| II.B | Commentary 203.5(a)–2 |
| II.C | Commentary 203.5(a)–3 |
| II.D | Commentary 203.5(a)–3 |
| II.E | Regulation 203.4(a)(8) |
| III.A | Deleted |
| III.B | Commentary 203.5(a)–6 |
| III.C | Commentary 203.5(a)–7 |
| III.D.1 | Regulation 203.5(b)(1) and (2); Commentary 203.5(b)–1 |
| III.D.1.a | Regulation 203.5(b)(3) |

TABLE 6. APPENDIX A—Continued

| Current | Proposed |
|---|---|
| III.D.1.b | Regulation 203.5(b)(3) |
| III.D.2 | Commentary 203.5(b)–2 |
| III.E.1 | Regulation 203.5(c) |
| III.E.2 | Commentary 203.5(c)–1 |
| III.E.3 | Regulation 203.5(c) |
| III.F.1 | Commentary 203.5(e)–1 |
| III.F.2 | Commentary 203.5(e)–2 |
| IV.A.1 | Commentary 203.4(a)–1(i) |
| IV.A.2 | Commentary 203.4(a)–1(ii) |
| IV.A.3 | Commentary 203.4(a)–1(iii) |
| IV.A.4 | Commentary 203.4(a)–1(iv) |
| IV.A.5 | Commentary 203.4(a)–1(v) |
| IV.B | Deleted |
| V.A.1 | 1st paragraph App.A.I.A.1; 2nd paragraph Commentary 203.4(a)(1)–4 |
| V.A.2 | App. A.I.A.2 |
| V.A.3 | App. A.I.A.3 |
| V.A.4 | App. A.I.A.4 |
| V.A.5 | App. A.I.A.4; explanatory material regarding home purchase, HELOCs, deleted |
| V.A.6 | App. A.I.A.5 |
| V.A.7 | App. A.I.A.5 |
| V.A.8 | App. A.I.A.6 |
| V.B.1 | App. A.I.B.1 |
| V.B.2 | App. A.I.B.1 |
| V.B.3 | App. A.I.B.2 |
| V.C | App. A.I.C |
| V.C.1 | App. A.I.C.1 |
| V.C.2 | App. A.I.C.2 |
| V.C.3 | App. A.I.C.3 |
| V.C.4 | App. A.I.C.4 |
| V.C.5 | App. A.I.C.5 |
| V.C.6 | Deleted |
| V.C.7 | App. A.I.C.6 |
| V.D | App. A.I.D |
| V.D.1 | App. A.I.D.1 |
| V.D.2 | App. A.I.D.2; App.B. I.B.5 |
| V.D.3 | App. A.I.D.3 |
| V.D.4 | App. A.I.D.4 |
| V.D.5 | App. A.I.D.5 |
| V.E.1., 2.a, b, c, e | App. A.I.E. |
| V.E.1., 2.d | Commentary 203.4(a)(8)–2 |
| V.F | App. A.I.F |
| VI. | App. A.II. |

TABLE 7. APPENDIX B

| Current | Proposed |
|---|---|
| I.B.2 | App. B.I.B.3 |
| I.B.3 | App. B.I.B.4 |
| I.B.4 | App. B.I.B.5 |
| I.B.5 | Deleted |

## VII. Form of Comment Letters

Comment letters should refer to Docket No. R–1001, and, when possible, should use a standard typeface with a type size of 10 or 12 characters per inch. This will enable the Board to convert the text to machine-readable form through electronic scanning, and will facilitate automated retrieval of comments for review. Comments may, of course, be transmitted electronically to the address provided in this notice. Also, comments may be submitted on 3½ or 5½ inch computer diskettes in any IBM-compatible DOS-or Windows-based format, if accompanied by an original document in paper form.

## VIII. Paperwork Reduction Act

In accordance with section 3506 of the Paperwork Reduction Act of 1995 (44 U.S.C. Ch. 35; 5 CFR 1320 Appendix A.1), the Board has reviewed the proposed revisions under the authority delegated to the Board by OMB. The Federal Reserve may not conduct or sponsor, and an organization is not required to respond to, this information collection unless it displays a currently valid OMB number. The OMB control number is 7100–0247.

The information collection requirements that would be revised by this rulemaking appear in 12 CFR part 203. The information collection is mandatory under 12 U.S.C. 2801–2810. It generates data used to help determine whether financial institutions are serving the housing needs of their

communities, to help target investment to promote private investment where it is needed, and to provide data to assist in identifying possible discriminatory lending patterns and in enforcing antidiscrimination statutes.

The respondents are all types of financial institutions that meet the tests for coverage under the regulation. Under the Paperwork Reduction Act, however, the Federal Reserve accounts for the burden of the paperwork associated with the regulation only for state member banks, their subsidiaries, subsidiaries of bank holding companies, U.S. branches and agencies of foreign banks (other than federal branches, federal agencies, and insured state branches of foreign banks), commercial lending companies owned or controlled by foreign banks, and organizations operating under section 25 or 25A of the Federal Reserve Act (12 U.S.C. 601–604a; 611–631). Other federal agencies account for the paperwork burden for the institutions they supervise. Respondents must maintain their loan/application registers and modified registers for three years, and their disclosure statements for five years.

The current estimated annual burden for this information collection varies from 10 to 10,000 hours, depending on individual circumstances, with estimated averages of 202 hours for state member banks and 160 hours for mortgage banking subsidiaries and other respondents. The current estimated annual burden for the 625 institutions under Federal Reserve supervision is approximately 122,000 hours.

The proposed revisions would increase by 10 to 20 percent the overall burden imposed on institutions with respect to the data collection and reporting requirements. The majority of the proposed revisions would require new information to be reported on the loan/application registers (requests for preapproval, home-equity lines of credit, APR of a loan, HOEPA status of a loan, and whether a loan is for manufactured housing) as well as redefined information (home improvement loans and refinancings). These proposed revisions would require extra training for all lenders. The hourly paperwork burden will increase due to the new requirements. The modification of the coverage test for nondepository lenders would increase by a small amount—probably well under 5 percent—the number of those lenders required to report HMDA data. The proposed exclusion for the reporting of loans acquired in a branch acquisition would slightly decrease the overall burden. The Federal Reserve expects individual institution burden to vary according to the amount and types of lending done by the institution.

In order to quantify the burden estimates, the Federal Reserve solicits comment on the incremental burden associated with collecting and reporting information on: requests for preapproval, home-equity lines of credit, the redefinition of home improvement loans and refinancings (as well as on the alternative of collecting and reporting information on nonpurchase home loans generally), APR data, HOEPA status, and manufactured housing status. The Federal Reserve also solicits comment on how many institutions have a ''structured'' preapproval program that would be covered by the proposed HMDA revisions and how long it would take those institutions to collect and report the preapproval data. The Federal Reserve solicits comment on the number of hours on average an institution spends training its staff in a year when no revisions are proposed and how many hours the institution foresees training staff to review these revisions.

The Board's Legal Division has determined that HMDA data collection and reporting are required by law; completion of the loan/application register, submission to the Federal Reserve, and disclosure to the public upon request are mandatory. The data, as modified according to the regulation, are made publicly available and are not considered confidential. Information that might identify an individual borrower or applicant is given confidential treatment under exemption 6 of the Freedom of Information Act (5 U.S.C. 552(b)(6)).

The Paperwork Reduction Act requires that the Board solicit comment on: (a) Whether the proposed revised collection of information is necessary for the proper performance of the Federal Reserve's functions, including whether the information has practical utility; (b) the accuracy of the Federal Reserve's estimate of the burden of the proposed revised information collection, including the cost of compliance; (c) ways to enhance the quality, utility, and clarity of the information to be collected; and (d) ways to minimize the burden of information collection on respondents, including through the use of automated collection techniques or other forms of information technology. Comments on the collection of information should be sent to OMB, Paperwork Reduction Project (7100–0247), Washington, D.C. 20530, with copies of such comments sent to Mary M. West, Federal Reserve Clearance Officer, Mail Stop 97, Board of Governors of the Federal Reserve System, Washington, D.C. 20551.

## IX. Initial Regulatory Flexibility Analysis

In accordance with section 3(a) of the Regulatory Flexibility Act (5 U.S.C. 603(a)), the Board's Division of Research and Statistics has prepared a preliminary regulatory analysis of this proposal. A copy of the analysis may be obtained from Publications Services, Board of Governors of the Federal Reserve System, Washington, D.C. 20551, at (202) 452–3245. A summary of the preliminary analysis follows.

The major changes proposed for the regulation involve bringing more institutions and transactions under requirements for data collection and reporting and requiring more data on each covered transaction. Among the proposed revisions, those increasing the transactions covered and the data that are required to be reported for each transaction are the most significant in terms of potential benefits and in increasing regulatory burden. The proposal would affect all institutions currently within the scope of the regulation, including covered small institutions. The number of institutions that would newly be brought under the regulation is probably fairly limited; no newly covered institution would be a small mortgage lender in that, to be covered, institutions would have originated $50 million or more of home-purchase loans (including refinancings of such loans) in the prior calendar year and they may have significant other lending activities as well.

The draft proposal does not arise from a need to implement specific legislative changes. Rather, it is a consequence of Board policy to review its regulations periodically and a desire to update the regulation to reflect mortgage markets better, enhance consumer protection, and comply with new guidance from the Office of Management and Budget concerning collection of data on race and ethnicity by federal agencies.

It is difficult to quantify the benefits and costs associated with the proposed changes to the regulation. The expanded coverage will provide data to help identify possible discriminatory lending patterns and assist regulators in conducting examinations under the CRA and other laws. The data will also help inform the public about developments in the mortgage market by revealing the distribution of annual percentage rates on home loans and by ensuring that information is available about a significant and growing segment of the home loan market, home-equity lines of credit.

Although the proposed changes may offer a number of benefits they also will impose significant costs on lenders by requiring changes to their current procedures and systems for collecting and reporting required data. The regulatory agencies will take steps to mitigate these costs, but start-up costs for financial institutions to revise current computer and compliance systems are likely to be significant. The regulatory agencies themselves will also incur costs to revise computer software used to edit the HMDA data prior to its release to the public and to prepare required reports for both the regulated institutions and the public.

**List of Subjects in 12 CFR Part 203**

Banks, Banking, Federal Reserve System, Mortgages, Reporting and recordkeeping requirements.

**Text of Proposed Revisions**

Certain conventions have been used to highlight the proposed revisions to the text of Regulation C, Appendix B (including the Sample Data-Collection Form), and the Official Staff Commentary. New language is shown inside arrows, while language that would be deleted is set off in brackets. However, these conventions are not used in Appendix A because of the substantial number of changes; likewise, the changes to the forms in Appendix A are not highlighted, because these forms—which are very detailed—are easier to read without the conventions.

For the reasons set forth in the preamble, the Board proposes to revise 12 CFR part 203 to read as follows:

## PART 203—HOME MORTGAGE DISCLOSURE (REGULATION C)

Sec.
203.1 Authority, purpose, and scope.
203.2 Definitions.
203.3 Exempt institutions.
203.4 Compilation of loan data.
203.5 Disclosure and reporting.
203.6 Enforcement.
Appendix A to Part 203—Form and Instructions for Completion of HMDA Loan/Application Register
Appendix B to Part 203—Form and Instructions for Data Collection on Race or National Origin and Sex
Supplement I to Part 203—Staff Commentary

**Authority:** 12 U.S.C. 2801–2810.

### § 203.1 Authority, purpose, and scope.

(a) *Authority.* This regulation is issued by the Board of Governors of the Federal Reserve System (''Board'') pursuant to the Home Mortgage Disclosure Act (12 U.S.C. 2801 *et seq.*), as amended. The information-collection requirements have been approved by the U.S. Office of Management and Budget ►(''OMB'')◄ under 44 U.S.C. 3501 *et seq.* and have been assigned OMB numbers 1557–0159, 3064–0046, 1550–0021, [and] 7100–0247 ►, and 2502–0529,◄ for institutions reporting data to the Office of the Comptroller of the Currency, the Federal Deposit Insurance Corporation, the Office of Thrift Supervision, [and] the Federal Reserve System, ►and the Department of Housing and Urban Development (''HUD''),◄ respectively [; numbers]►. A number◄ for the National Credit Union Administration [and the Department of Housing and Urban Development are] ►is◄ pending.

(b) *Purpose.* (1) This regulation implements the Home Mortgage Disclosure Act, which is intended to provide the public with loan data that can be used:

(i) To help determine whether financial institutions are serving the housing needs of their communities;

(ii) To assist public officials in distributing public-sector investments so as to attract private investment to areas where it is needed; and

(iii) To assist in identifying possible discriminatory lending patterns and enforcing antidiscrimination statutes.

(2) Neither the act nor this regulation is intended to encourage unsound lending practices or the allocation of credit.

(c) *Scope.* This regulation applies to certain financial institutions, including banks, savings associations, credit unions, and other mortgage lending institutions, as defined in § 203.2(e). ►The regulation◄ [It] requires an institution to report data to its supervisory agency about home purchase ►loans,◄ [and] home improvement loans, ►refinancings, and home equity lines of credit that◄ it originates or purchases, or for which it receives applications; and to disclose certain data to the public.

[(d) *Loan aggregation and central data depositories.* Using the loan data made available by financial institutions, the Federal Financial Institutions Examination Council will prepare disclosure statements and will produce various reports for individual institutions for each metropolitan statistical area (''MSA''), showing lending patterns by location, age of housing stock, income level, sex, and racial characteristics. The disclosure statements and reports will be available to the public at central data depositories located in each MSA. A listing of central data depositories can be obtained from the Federal Financial Institutions Examination Council, Washington, D.C. 20006.]

### § 203.2 Definitions.

In this regulation:

(a) *Act* means the Home Mortgage Disclosure Act (12 U.S.C. 2801 *et seq.*), as amended.

(b) *Application* means an oral or written request for a home purchase ►loan, a◄ [or] home improvement loan ►, a refinancing, or a home-equity line of credit◄ that is made in accordance with procedures [established] ►used◄ by a financial institution for the type of credit requested. ►The term includes a request for a preapproval under procedures in which a financial institution issues to creditworthy persons a written commitment for a home purchase loan up to a specified amount that is valid for a designated period of time, even if issued subject to the identification of a suitable property or other conditions.◄

(c) *Branch office* means: (1) Any office of a bank, savings association, or credit union that is approved as a branch by a federal or state supervisory agency, but excludes free-standing electronic terminals such as automated teller machines; and

(2) Any office of a ►for-profit◄ mortgage-lending institution (other than a bank, savings association, or credit union) that takes applications from the public for home purchase ►loans◄ or home improvement loans. A ►for-profit◄ mortgage-lending institution is also deemed to have a branch office in a[n MSA] ►metropolitan area◄ if, in the preceding calendar year, it received applications for, originated, or purchased five or more home purchase ►loans◄ or home improvement loans ►related to◄ [on] property located in that [MSA] ►metropolitan area◄.

(d) *Dwelling* means a residential structure (whether or not [it is] attached to real property) located in a state of the United States of America, the District of Columbia, or the Commonwealth of Puerto Rico. The term includes an individual condominium unit, cooperative unit, or [mobile or] manufactured home.

[(e) *Financial institution* means:

(1) A bank, savings association, or credit union that originated in the preceding calendar year a home purchase loan (other than temporary financing such as a construction loan) including a refinancing of a home purchase loan, secured by a first lien on a one-to four-family dwelling if—

(i) The institution is federally insured or regulated; or

(ii) The loan is insured, guaranteed, or supplemented by any federal agency; or

(iii) The institution intended to sell the loan to the Federal National

Mortgage Association or the Federal Home Loan Mortgage Corporation;

(2) A for-profit mortgage-lending institution (other than a bank, savings association, or credit union) whose home purchase loan originations (including refinancings of home purchase loans) equaled or exceeded ten percent of its loan-origination volume, measured in dollars, in the preceding calendar year.]

►(e) *Financial institution* means:

(1) A bank, savings association, or credit union that:

(i) On the preceding December 31 had assets in excess of the asset threshold established and published annually by the Board for coverage by the act, based on the year-to-year change in the average of the Consumer Price Index for Urban Wage Earners and Clerical Workers, not seasonally adjusted, for each twelve month period ending in November, with rounding to the nearest million;

(ii) On the preceding December 31, had a home or branch office in a metropolitan area;

(iii) In the preceding calendar year, originated at least one home purchase loan (excluding temporary financing such as a construction loan) or refinancing of a home purchase loan, secured by a first lien on a one-to-four-family dwelling; and

(iv) Meets at least one of the following three criteria:

(A) The institution is federally insured or regulated;

(B) The mortgage loan referred to in paragraph (e)(1)(iii) of this section was insured, guaranteed, or supplemented by a federal agency; or

(C) The mortgage loan referred to in paragraph (e)(1)(iii) oF THIS SECTION was intended by the institution for sale to the Federal National Mortgage Association or the Federal Home Loan Mortgage Corporation; and

(2) A for-profit mortgage-lending institution (other than a bank, savings association, or credit union) that:

(i) In the preceding calendar year either:

(A) Originated home purchase loans, including refinancings of home purchase loans, that equaled at least ten percent of its loan-origination volume, measured in dollars; or

(B) Originated home purchase loans, including refinancings of home purchase loans, that equaled at least $50 million;

(ii) Had either a home office or a branch office in a metropolitan area, on the preceding December 31; and

(iii) Either:

(A) Had total assets of more than $10 million, counting the assets of any parent corporation, on the preceding December 31; or

(B) Originated at least 100 home purchase loans, including refinancings of home purchase loans, in the preceding calendar year.

(f) *Home-equity line of credit* means an open-end credit plan secured by a dwelling as defined in Regulation Z (Truth in Lending), 12 CFR part 226.◄

[(f)]►(g)◄ *Home improvement loan* means any loan ►, other than a home-equity line of credit,◄ that [: (1)] is for the purpose, in whole or in part, of repairing, rehabilitating, remodeling or improving a dwelling or the real property on which it is located ►.◄ [; and (2) is classified by the financial institution as a home improvement loan.]

[(g)]►(h)◄ *Home purchase loan* means any loan secured by and made for the purpose of purchasing a dwelling.

►(i) *Manufactured home* means any residential structure as defined under regulations of the Department of Housing and Urban Development establishing manufactured home construction and safety standards (24 CFR 3280.2).◄

[(h)]►(j)◄ *Metropolitan [statistical] area [or MSA]* means a metropolitan area as defined by OMB.

►(k) *Refinancing* means a new obligation satisfying and replacing an existing obligation by the same borrower, where:

(1) For coverage purposes, the existing obligation is a home purchase loan (as determined by the lender, for example, by reference to available documents, or as stated by the applicant), and both the existing obligation and the new obligation are secured by first liens on dwellings; and

(2) For reporting purposes, both the existing obligation and the new obligation are secured by a lien on a dwelling.◄

**§ 203.3 Exempt institutions.**

[(a) *Exemption based on location, asset size, or number of home purchase loans.* (1) A bank, savings association, or credit union is exempt from the requirements of this regulation for a given calendar year if on the preceding December 31—

(i) The institution had neither a home office nor a branch office in an MSA; or

(ii) The institution's total assets were at or below the asset threshold established by the Board. The asset threshold was adjusted from $10 million to $28 million as of December 31, 1996. For subsequent years, the Board will adjust the threshold based on the year-to-year change in the average of the Consumer Price Index for Urban Wage Earners and Clerical Workers, not seasonally adjusted, for each 12-month period ending in November, with rounding to the nearest million. The Board will publish any adjustment in the asset figure in December in the staff commentary.

(2) A for-profit mortgage lending institution (other than a bank, savings association, or credit union) is exempt from the requirements of this regulation for a given calendar year if—

(i) The institution had neither a home office nor a branch office in an MSA on the preceding December 31; or

(ii) The institution's total assets combined with those of any parent corporation were $10 million or less on the preceding December 31, and the institution originated fewer than 100 home purchase loans (including refinancings of home purchase loans) in the preceding calendar year.]

[(b)] ►(a)◄ *Exemption based on state law.* (1) A state-chartered or state-licensed financial institution is exempt from the requirements of this regulation if the Board determines that the institution is subject to a state disclosure law that contains requirements substantially similar to those imposed by this regulation and ►that◄ contains adequate provisions for enforcement.

(2) Any state-chartered or state-licensed financial institution, or association of such institutions may apply to the Board for an exemption under this paragraph.

(3) An institution that is exempt under this paragraph shall ►use the disclosure form required by its state law and◄ submit the data required by ►that◄ [the state disclosure] law to its state supervisory agency for purposes of aggregation.

[(c)] ►(b)◄ *Loss of exemption.* [(1) An institution losing an exemption that was based on the criteria set forth in paragraph (a) of this section shall comply with this regulation beginning with the calendar year following the year in which it lost its exemption.]

[(2)] An institution losing a[n] ►state-law◄ exemption under paragraph [(b)] ►(a)◄ of this section shall comply with this regulation beginning with the calendar year following the year for which it last reported loan data under the state disclosure law.

**§ 203.4 Compilation of loan data.**

(a) *Data format and itemization.* A financial institution shall collect data regarding applications for, and originations and purchases of, home purchase ►loans,◄ [and] home improvement loans ►,◄ [(including]

refinancings [of both)] ►, and home-equity lines of credit◄ for each calendar year. These transactions shall be recorded, within thirty calendar days after the end of each calendar quarter in which final action is taken (such as origination or purchase of a loan, or denial or withdrawal of an application), on a register in the format prescribed in Appendix A of this part and shall include the following items:

(1) A►n identifying◄ number for the loan or loan application, and the date the application was received.

(2) The type and purpose of the loan ►or application◄.

(3) The owner-occupancy status of the property to which the loan ►or application◄ relates.

(4) The amount of the loan or application.

(5) The type of action taken, and the date.

(6) The location of the property to which the loan ►or application◄ relates, by ►metropolitan area◄ [MSA], state, county, and census tract, if the institution has a home or branch office in that ►metropolitan area◄ [MSA].

(7) The race or national origin and sex of the applicant or borrower, and the gross annual income relied on in processing the application.

(8) The type of entity purchasing a loan that the institution originates or purchases and then sells within the same calendar year ►(this information need not be included in quarterly updates).

(9) For a loan or application that is subject to Regulation Z (Truth in Lending, 12 CFR part 226), the following additional items:

(i) The annual percentage rate for the loan, as calculated and disclosed under § 226.14(b) or § 226.22 of Regulation Z.

(ii) An indication whether the loan is subject to the Home Ownership and Equity Protection Act of 1994, as implemented in § 226.32 of Regulation Z.◄

(b) *Collection of data on race or national origin, sex, and income.* (1) A financial institution shall collect data about the race or national origin and sex of the applicant or borrower as prescribed in appendix B ►of this part◄. [If the borrower or applicant chooses not to provide the information, the lender shall note the data on the basis of visual observation or surname, to the extent possible.]

(2) Race or national origin, sex, and income data may but need not be collected for[—

(i) Loans] ►loans◄ purchased by the financial institution►.◄[; or

(ii) Applications received or loans originated by a bank, savings association, or credit union with assets on the preceding December 31 of $30 million or less.]

(c) *Optional data.* A financial institution may report the reasons it denied a loan application.

(d) *Excluded data.* A financial institution shall not report:

(1) Loans originated or purchased by the financial institution acting in a fiduciary capacity (such as trustee);

(2) Loans on unimproved land;

(3) Temporary financing (such as bridge or construction loans);

(4) The purchase of an interest in a pool of loans (such as mortgage-participation certificates►, mortgage-backed securities, or real estate mortgage investment conduits◄); [or]

(5) The purchase solely of the right to service loans[.] ►; or

(6) Loans purchased as part of a merger or acquisition, or as part of the acquisition of all of the assets and liabilities of a branch office as defined in § 203.2(c)(1).◄

(e) *Data reporting under CRA for banks and savings associations with total assets of $250 million or more and banks and savings association that are subsidiaries of a holding company whose total banking and thrift assets are $1 billion or more.* As required by [agency] regulations that implement the Community Reinvestment Act ►of 1977 (12 U.S.C. 2901 *et seq.*)◄, banks and savings associations that had total assets of $250 million or more (or are subsidiaries of a holding company with total banking and thrift assets of $1 billion or more) as of December 31 for each of the immediately preceding two years [,] shall also collect the location of property located outside the ►metropolitan areas◄ [MSAs] in which the institution has a home or branch office, or outside any ►metropolitan areas◄ [MSAs].

**§ 203.5 Disclosure and reporting.**

(a) *Reporting to agency.* ►(1)◄ By March 1 following the calendar year for which the loan data are compiled, a financial institution shall send its complete loan/application register to the agency office specified in appendix A of this part ►.◄ [and] ►The institution◄ shall retain a copy for its records for [a period of not less than] ►at least◄ three years.

►(2) A subsidiary of a bank or savings association shall complete a separate loan/application register. The subsidiary shall submit the register, directly or through its parent, to the agency that supervises its parent.◄

(b) *Public disclosure of statement.* ►(1) The Federal Financial Institutions Examination Council (''FFIEC'') will prepare a disclosure statement from the data each institution submits.◄

[(1)] ►(2)◄ A financial institution shall make its [mortgage loan] disclosure statement ([to be] prepared by the [Federal Financial Institutions Examination Council] ►FFIEC◄) available to the public at its home office no later than three business days after receiving it from the [Examination Council] ►FFIEC◄.

[(2)] ►(3)◄ In addition, a financial institution shall either—

(i) Make its disclosure statement available to the public [(]within ten business days of receiving it [)] in at least one branch office in each additional ►metropolitan area◄ [MSA] where the institution has offices (the disclosure statement need only contain data relating to the ►metropolitan area◄ [MSA] where the branch is located); or

(ii) Post the address for sending written requests for the disclosure statement in the lobby of each branch office in a[n] ►metropolitan area◄ [MSA] where the institution has offices, and mail or deliver a copy of the disclosure statement, within fifteen calendar days of receiving a written request (the disclosure statement need only contain data relating to the ►metropolitan area◄ [MSA] for which the request is made). Including the address in the general notice required under paragraph (e) of this section satisfies this requirement.

(c) *Public disclosure of loan/application register.* A financial institution shall make its loan/application register available to the public after [modifying it in accordance with Appendix A.] ►removing the following information regarding each entry: the application or loan number, the date that the application was received, and the date action was taken.◄ ►An institution shall make its modified register available following the calendar year for which the data are compiled, by March 31 for a request received on or before March 1, and within 30 days for a request received after March 1. The modified register need only contain data relating to the ►metropolitan area◄ [MSA] for which the request is made.

(d) *Availability of data.* A financial institution shall make its modified register available to the public for a period of three years and its disclosure statement available for a period of five years. An institution shall make the data available for inspection and copying during the hours the office is normally open to the public for business. It may

impose a reasonable fee for any cost incurred in providing or reproducing the data.

(e) *Notice of availability.* A financial institution shall post a general notice about the availability of its HMDA data in the lobby of its home office and of each branch office located in a[n] ►metropolitan area◄ [MSA]. It shall ►provide◄ promptly upon request [provide] the location of the institution's offices where the statement is available for inspection and copying, or it may include the location in the ►lobby◄ notice.

►(f) *Loan aggregation and central data depositories.* Using the loan data made available by financial institutions, the FFIEC will produce reports for individual institutions for each metropolitan area, showing lending patterns by location, age of housing stock, income level, sex, and racial characteristics. These reports, as well as individual institution disclosure statements, will be available to the public at central data depositories located in each metropolitan area. A listing of central data depositories can be obtained from the Federal Financial Institutions Examination Council, Washington, D.C. 20006.◄

**§ 203.6 Enforcement.**

(a) *Administrative enforcement.* A violation of the act or this regulation is subject to administrative sanctions as provided in section 305 of the act, including the imposition of civil money penalties, where applicable. Compliance is enforced by the agencies listed in appendix A [of this regulation] ►of this part◄.

(b) *Bona fide errors.* ►(1)◄ An error in compiling or recording loan data is not a violation of the act or this regulation if it was unintentional and occurred despite the maintenance of procedures reasonably adapted to avoid such errors.

►(2) An incorrect entry for a census tract number is a bona fide error, and is not a violation of the act or this regulation, provided that the institution maintains reasonable procedures to avoid such errors.

(3) If an institution makes a good-faith effort to record all data concerning covered transactions fully and accurately within 30 days after the end of each calendar quarter, and some data are nevertheless inaccurate or incomplete, the error or omission is not a violation of the act or this regulation provided that the institution corrects and completes the information prior to reporting the loan/application register to its regulatory agency.◄

## ►Appendix A to Part 203—Form and Instructions for Completion of HMDA Loan/Application Register

**Paperwork Reduction Act Notice**

This report is required by law (12 U.S.C. 2801–2810 and 12 CFR part 203). An agency may not conduct or sponsor, and an organization is not required to respond to, a collection of information unless it displays a currently valid Office of Management and Budget (OMB) Control Number. See 12 CFR 203.1(a) for the currently valid OMB Control Numbers, applicable to this information collection, for the agencies responsible for the collection of information. Send comments regarding this burden estimate or any other aspect of this collection of information, including suggestions for reducing the burden, to the respective agencies and to OMB, Office of Information and Regulatory Affairs, Paperwork Reduction Project, Washington, D.C. 20503. Be sure to reference the applicable agency and its OMB control number, as found in 12 CFR 203.1(a), when submitting comments to OMB.

**I. Instructions for Completion of Loan/Application Register**

*A. Application or Loan Information*

1. *Application or Loan Number.* a. Enter an identifying number that can be used later to retrieve the loan or application file. It can be any number of your choosing (not exceeding 25 characters). You may use letters, numerals, or a combination of both.

2. *Date Application Received.* a. For paper submissions only, enter the date the loan application was received by your institution by month, day, and year, using numerals in the form MM/DD/CCYY (for example, 01/15/2000). For institutions submitting data in electronic form, the proper format is CCYYMMDD. If your institution normally records the date shown on the application form you may use that date instead. Enter ''NA'' for loans purchased by your institution.

3. *Type.* Indicate the type of loan or application by entering the applicable code from the following:

1—Conventional (any loan other than FHA, VA, FSA, or RHS loans)

2—FHA-insured (Federal Housing Administration)

3—VA-guaranteed (Veterans Administration)

4—FSA/RHS-guaranteed (Farm Service Agency or Rural Housing Service)

4. *Purpose.* Indicate the purpose of the loan or application by entering the applicable code from the following:

Code 1—Home purchase (one- to four-family)

Code 2—Home improvement (one- to four-family)

a. Report both secured and unsecured loans.

Code 3—Refinancings (one- to four-family)

a. Do not report a refinancing if, under the loan agreement, you are unconditionally obligated to refinance the obligation, or you are obligated to refinance the obligation subject to conditions within the borrower's control.

Code 4—Multifamily dwelling (home purchase, home improvement, and refinancings)

a. Code 4 applies to loans and applications on dwellings for five or more families, including home purchase loans, refinancings, and loans for repairing, rehabilitating, and remodeling purposes.

b. Do not use Code 4 for loans on individual condominium or cooperative units; use other Codes as applicable.

Code 5—Home-equity line of credit (one-to-four-family)

Code 6—Manufactured home

a. Use the applicable Code from Codes 1–5 and also use Code 6 if applicable.

5. *Owner Occupancy.* Indicate whether the property to which the loan or loan application relates is to be owner-occupied as a principal dwelling by entering the applicable code from the following:

Code 1—Owner-occupied as a principal residence

a. For purchased loans, use Code 1 unless the loan documents or application indicate that the property will not be owner-occupied as a principal residence.

Code 2—Not owner-occupied as a principal residence

a. Code 2 applies to second homes or vacation homes, as well as rental properties.

Code 3—Not applicable

a. Use Code 3 if the property to which the loan relates is a multifamily dwelling; is not located in a metropolitan area; or is located in a metropolitan area in which your institution has neither a home nor a branch office. Alternatively, at your option, you may use Code 1 or 2 for these situations, as applicable, to report the actual occupancy status.

6. *Loan Amount.* Enter the amount of the loan or application. Do not report loans below $500. Show the amount in thousands, rounding to the nearest thousand ($500 should be rounded up to the next $1,000). For example, a loan for $167,300 should be entered as 167 and one for $15,500 as 16.

a. For a home purchase loan that you originated, enter the principal amount of the loan.

b. For a home purchase loan that you purchased, enter the unpaid principal balance of the loan at the time of purchase.

c. For all home improvement loans, enter the entire amount of the loan—including unpaid finance charges if that is how such loans are recorded on your books—even if only a part of the proceeds is intended for home improvement.

d. Report the entire amount of a home-equity line of credit, but only in the year the line is established (or other action is taken, such as denial of an application).

e. For refinancings, indicate the total amount of the refinancing, including both the amount outstanding on the original loan and any amount of ''new money.''

f. For a loan application that was denied or withdrawn, enter the amount applied for.

*B. Action Taken*

1. *Type of action.* Indicate the type of action taken on the application or loan by using one of the following codes.

Code 1—Loan originated.

a. Use Code 1 for a loan that is originated, including one resulting from a counteroffer (your offer to the applicant to make the loan on different terms or in a different amount from the terms or amount initially applied for) that the applicant accepts.

Code 2—Approved but not accepted.

a. Use Code 2 when the application is approved but the applicant (or a loan broker or correspondent) fails to respond to your notification of approval or your commitment letter within the specified time.

Code 3—Application denied.

a. Report as a denial the situation when an applicant turns down or fails to respond to your counteroffer.

Code 4—Application withdrawn.

a. Use Code 4 when the application is expressly withdrawn by the applicant before a credit decision was made.

Code 5—File closed for incompleteness.

a. Use Code 5 if you sent a written notice of incompleteness under § 202.9(c)(2) of Regulation B (Equal Credit Opportunity) and the applicant failed to respond to your request for additional information within the period of time specified in your notice.

Code 6—Loan purchased by your institution.

2. *Date of action.* For paper submissions only, enter the date by month, day, and year, using numerals in the form MM/DD/CCYY (for example, 02/22/2000). For institutions submitting data in electronic form, the proper format is CCYYMMDD.

a. For loans originated, enter the settlement or closing date.

b. For loans purchased, enter the date of purchase by your institution.

c. For applications denied, applications approved but not accepted by the applicant, and files closed for incompleteness, enter the date that the action was taken by your institution or the date the notice was sent to the applicant.

d. For applications withdrawn, enter the date you received the applicant's express withdrawal; or enter the date shown on the notification from the applicant, in the case of a written withdrawal.

*C. Property Location*

Except as otherwise provided, in these columns enter the applicant codes for the metropolitan area, state, county, and census tract for the property to which a loan relates.

1. *Metropolitan area* For each loan or loan application, indicate the location of the property by the metropolitan area number. Metropolitan area boundaries are defined by OMB; use the boundaries that were in effect on January 1 of the calendar year for which you are reporting. A listing of metropolitan areas is available from your supervisory agency or the FFIEC.

2. *State and County.* Use the Federal Information Processing Standard (FIPS) two-digit numerical code for the state and the three-digit numerical code for the county. These codes are available from your supervisory agency or the FFIEC.

3. *Census Tract.* Indicate the census tract where the property is located. Notwithstanding paragraph 6:

a. Enter the code ''NA'' if the property is located in an area not divided into census tracts on the U.S. Census Bureau's census-tract outline maps (see paragraph 4 below). Alternatively, if the property is located in a block numbering area (BNA), you may enter the BNA number.

b. If the property is located in a county with a population of 30,000 or less in the 1990 census (as determined by the Census Bureau's 1990 CPH–2 population series), enter ''NA'' (even if the population has increased above 30,000 since 1990), or enter the census tract number (or the BNA number, if applicable).

4. *Census Tract Number.* For the census tract number, consult the U.S. Census Bureau's Census Tract/Street Index for 1990, and for addresses not listed in the index, consult the Census Bureau's census tract outline maps. Use the maps from the Census Bureau's 1990 CPH–3 series, or equivalent 1990 census data from the Census Bureau (such as the Census TIGER/Line file) or from a private publisher.

5. *Outside-Metropolitan Area.* For loans on property located outside the metropolitan areas in which the institution has a home or branch office, or outside any metropolitan area, an institution may choose one of the following two options. Under the first option, the institution may enter the metropolitan area, state, and county codes and the census tract number. It may enter ''NA'' in the metropolitan area or census tract column if no code or number exists for the property. In the census tract column, if there is a BNA number for the property rather than a census tract number, the institution may enter the BNA number at its option. (Codes exist for all states and counties). Under this first option, the codes and tract number must accurately identify the property location in question. Under the second option, which is not available if paragraph 6 applies, an institution enters ''NA'' in all four columns, whether or not the codes or numbers exist for the property.

6. *Data Reporting Under CRA for Banks and Savings Associations with Total Assets of $250 Million or More and Banks and Savings Associations that are Subsidiaries of a Holding Company Whose Total Banking and Thrift Assets are $1 Billion or More.* If you are a bank or savings association with total assets of $250 million or more as of December 31 for each of the immediately preceding two years, you must enter the location of property even if the property is outside metropolitan areas in which you have a home or branch office, or outside any metropolitan area. Enter this information also if you are a bank or savings association that is a subsidiary of a holding company with total banking and thrift assets of $1 billion or more as of December 31 for each of the immediately preceding two years.

7. *Requests for Preapproval.* Notwithstanding paragraphs 1–6, if the application is a request for preapproval, you may enter the code ''NA'' in all four columns.

*D. Applicant Information—Race or National Origin, Sex, and Income*

Appendix B of this part contains instructions for the collection of data on race or national origin and sex, and also contains a sample form for data collection.

1. *Applicability.* Report this information for loans that you originate as well as for applications that do not result in an origination.

a. You need not collect or report this information for loans purchased. If you choose not to, use the Codes for ''not applicable.''

b. If the borrower or applicant is not a natural person (a corporation or partnership, for example), use the Codes for ''not applicable.''

2. *Mail or Telephone Applications.* Any loan applications mailed to applicants must contain a collection form similar to that shown in appendix B of this part, and you must record on your register the data on race or national origin and sex if the applicant provides it. If the applicant chooses not to provide the data, enter the Code for ''information not provided by applicant in mail or telephone application'' specified in the next paragraph. (*See* Appendix B for complete information on the collection of these data in mail or telephone applications.)

3. *Race or National Origin of Borrower or Applicant.* Use the following Codes to indicate the race or national origin of the applicant or borrower under column ''A'' and of any co-applicant or co-borrower under column ''CA.''

If an applicant selects more than one designation, use all Codes corresponding to the applicant's selections. If there is more than one co-applicant, provide the required information only for the first co-applicant listed on the application form. If there are no co-applicants or co-borrowers, use Code 8 for ''not applicable'' in the co-applicant column.

1—American Indian or Alaska Native
2—Asian
3—Black or African American
4—Native Hawaiian or Other Pacific Islander
5—White
6—Hispanic or Latino
7—Information not provided by applicant in mail or telephone application
8—Not Applicable

4. *Sex of Borrower or Applicant.* Use the following Codes to indicate the sex of the applicant or borrower under column ''A'' and of any co-applicant or co-borrower under column ''CA.'' If there is more than one co-applicant, provide this information only for the first co-applicant listed on the application form. If there are no co-applicants or co-borrowers, use Code 4 for ''not applicable.''

1—Male
2—Female
3—Information not provided by applicant in mail or telephone application
4—Not applicable

5. *Income.* Enter the gross annual income that your institution relied on in making the credit decision.

a. Round all dollar amounts to the nearest thousand (round $500 up to the next $1,000), and show in terms of thousands. For example, $35,500 should be reported as 36.

b. For loans on multifamily dwellings, enter ''NA.''

c. If no income information is asked for or relied on in the credit decision, enter ''NA.''

*E. Type of Purchaser*

Enter the applicable code to indicate whether a loan that your institution originated or purchased was then sold to a secondary market entity within the same calendar year:

Code 0—Loan was not originated or was not sold in calendar year covered by register.

a. Use Code 0 for applications that were denied, withdrawn, or approved but not accepted by the applicant; and for files closed for incompleteness.

b. Use Code 0 if you originated or purchased a loan and did not sell it during that same calendar year. If you sell the loan in a succeeding year, you need not report the sale.

Code 1—FNMA (Federal National Mortgage Association)

Code 2—GNMA (Government National Mortgage Association)

a. Use Code 2 if you conditionally assign a loan to GNMA in connection with a mortgage-backed security transaction.

Code 3—FHLMC (Federal Home Loan Mortgage Corporation)

Code 4—FAMC (Federal Agricultural Mortgage Corporation)

Code 5—Commercial bank

Code 6—Savings bank or savings association

Code 7—Life insurance company

Code 8—Affiliate institution

a. Use Code 8 for loans sold to an institution affiliated with you, such as your subsidiary or a subsidiary of your parent corporation.

Code 9—Other type of purchaser

*F. Reasons for Denial*

1. You are not required to enter the reasons for denial of an application. But if you choose to do so you may indicate up to three reasons using the following codes. Leave this column blank if the ''action taken'' on the application is not a denial. For example, do not complete this column if the application was withdrawn or the file was closed for incompleteness.

1—Debt-to-income ratio
2—Employment history
3—Credit history
4—Collateral
5—Insufficient cash (downpayment, closing costs)
6—Unverifiable information
7—Credit application incomplete
8—Mortgage insurance denied
9—Other

2. If your institution uses the model form for adverse action contained in Appendix to Regulation B (Form C–1 in Appendix C, Sample Notification Form), use the foregoing codes as follows:

a. Code 1 for: Income insufficient for amount of credit requested, and Excessive obligations in relation to income.

b. Code 2 for: Temporary or irregular employment, and Length of employment.

c. Code 3 for: Insufficient number of credit references provided; Unacceptable type of credit references provided; No credit file; Limited credit experience; Poor credit performance with us; Delinquent past or present credit obligations with others; Garnishment, attachment, foreclosure, repossession, collection action, or judgment; and Bankruptcy.

d. Code 4 for: Value or type of collateral not sufficient.

e. Code 6 for: Unable to verify credit references; Unable to verify employment; Unable to verify income; and Unable to verify residence.

f. Code 7 for: Credit application incomplete.

g. Code 9 for: Length of residence; Temporary residence; and Other reasons specified on notice.

*G. Other Data*

For an application or loan covered by the Truth in Lending Act (TILA), enter the following information:

1. *Annual Percentage Rate.* Enter the annual percentage rate (APR) as calculated and disclosed under Regulation Z (12 CFR part 226).

a. If the application or loan is not subject to TILA, or is subject to TILA but an APR was not required to be disclosed to the applicant (for example, because the application was withdrawn before the time disclosure was required), enter ''NA.''

b. If only an estimated APR was required to be disclosed to the applicant, enter the estimated APR.

c. Enter the APR to two decimal places. If the APR was disclosed to the applicant showing less than two decimal places, fill the remaining decimal places with zeros; if showing more than two decimal places, the APR may be rounded or the digits beyond two decimal places may be truncated.

d. In a home-equity line of credit with an introductory rate, where both the introductory and regular APR were required to be disclosed to the applicant, enter the regular APR.

2. *HOEPA status.* a. If the loan or application is covered by TILA, but is not covered by the Home Ownership and Equity Protection Act of 1994 (HOEPA), as implemented in Regulation Z, § 226.32, enter Code 0.

b. If the loan or application is covered by TILA and by § 226.32, enter Code 1.

c. If the loan or application is not covered by TILA, is covered by TILA but no APR was required to be disclosed to the applicant, or for any other reason it cannot be determined whether the loan or application is covered by § 226.32, enter Code 2.

**II. Federal Supervisory Agencies**

Send your loan/application register, direct any questions, and direct any requests (such as for a listing of metropolitan areas or FIPS codes) to the office of your federal supervisory agency as specified below. Terms used below that are not defined in the Federal Deposit Insurance Act (12 U.S.C. 1813(s)) have the meanings given to them in the International Banking Act of 1978 (12 U.S.C. 3101).

*A. National Banks and Their Subsidiaries and Federal Branches and Federal Agencies of Foreign Banks*

District office of the Office of the Comptroller of the Currency for the district in which the institution is located.

*B. State Member Banks of the Federal Reserve System, Their Subsidiaries, Subsidiaries of Bank Holding Companies, Branches and Agencies of Foreign Banks (Other than Federal Branches, Federal Agencies, and Insured State Branches of Foreign Banks), Commercial Lending Companies Owned or Controlled By Foreign Banks, and Organizations Operating Under Section 25 or 25A of the Federal Reserve Act*

Federal Reserve Bank serving the District in which the state member bank is located; for institutions other than state member banks, the Federal Reserve Bank specified by the Board of Governors.

*C. Nonmember Insured Banks (Except for Federal Savings Banks) and Their Subsidiaries and Insured State Branches of Foreign Banks*

Regional director of the Federal Deposit Insurance Corporation for the region in which the institution is located.

*D. Savings Institutions Insured Under the Savings Association Insurance Fund of the FDIC, Federally Chartered Savings Banks Insured Under the Bank Insurance Fund of the FDIC (but not Including State-Chartered Savings Banks Insured Under the Bank Insurance Fund), their Subsidiaries, and Subsidiaries of Savings Institution Holding Companies*

Regional or other office specified by the Office of Thrift Supervision.

*E. Credit Unions and Their Subsidiaries*

National Credit Union Administration, Office of Examination and Insurance, 1775 Duke Street, Alexandria, V.A. 22314.

*F. Other Depository Institutions*

Regional director of the Federal Deposit Insurance Corporation for the region in which the institution is located.

*G. Other Mortgage-Lending Institutions*

Assistant Secretary for Housing, HMDA Reporting—Room 9233, U.S. Department of Housing and Urban Development, 451 7th Street, S.W., Washington, D.C. 20410.◄

**BILLING CODE 6210–01–P**

Form FR HMDA-LAR
OMB No. 7100-0247. Approval expires May 31, 2000

# LOAN/APPLICATION REGISTER

TRANSMITTAL SHEET

**You must complete this transmittal sheet (please type or print) and attach it to the Loan/Application Register, required by the Home Mortgage Disclosure Act, that you submit to your supervisory agency.**

| Reporter's Identification Number | Agency Code | Reporter's Tax Identification Number | Total line entries contained in attached Loan/Application Register |
|---|---|---|---|
| _ _ _ _ _ _ _ _ _ _ | _ | _ _ - _ _ _ _ _ _ _ | _____ |

The Loan/Application Register that is attached covers activity during the year_____ and contains a total of _____ pages.

Enter the name and address of your institution. The disclosure statement that is produced by the Federal Financial Institutions Examination Council will be mailed to the address you supply below:

_____
Name of Institution

_____
Address

_____
City, State, ZIP

Enter the name, telephone number, facsimile number, and e-mail address of a person who may be contacted about questions regarding your register:

| Name | ( ) Telephone Number | ( ) Facsimile Number (if applicable) | e-mail address |
|---|---|---|---|
| | | | |

An officer of your institution must complete the following section.

**I certify to the accuracy of the data contained in this register.**

| Name of Officer | Signature | Date |
|---|---|---|
| | | |

LOAN/APPLICATION REGISTER Page___of___

Form FR HMDA–LAR

Name of Reporting Institution

City, State, ZIP

Reporter's Identification Number

Agency Code

All columns (except Reasons for Denial) must be completed for each entry. See the instructions for details.

| Application or Loan Information | | | | | | Action Taken | | Property Location | | | | Applicant Information A = Applicant CA = Co-Applicant | | | | | | | Other Data | |
|---|---|---|---|---|---|---|---|---|---|---|---|---|---|---|---|---|---|---|---|---|
| | | | | | | | | | | | | Race or National Origin | | Sex | | Gross Annual Income in thousands | | | | |
| Application or Loan Number | Date Application Received (mm/dd/ccyy) | Type | Purpose | Owner Occupancy | Loan Amount in Thousands | Type | Date (mm/dd/ccyy) | Four-Digit Metropolitan Area Number | Two-Digit State Code | Three-Digit County Code | Six-Digit Census Tract | A | CA | A | CA | | Type of Purchaser of Loan | Reasons for Denial (optional) | APR | HOEPA Status |
| **Example of Loan Originated** | | | | | | | | | | | | | | | | | | | | |
| LB-6743 9 | 01/15/2000 | 2 | 1 | 1 | 65 | 1 | 02/22/2000 | 8840 | 51 | 059 | 421.85 | 3,5 | 8 | 1 | 4 | 24 | 7 | | | |
| **Example of Application Denied** | | | | | | | | | | | | | | | | | | | | |
| 0123456789-98765432 10 | 03/20/2000 | 1 | 1 | 1 | 125 | 3 | 04/30/2000 | 0450 | 01 | 015 | 002100 | 5,6 | 4 | 2 | 1 | 55 | 0 | 4,1,5 | | |

# LOAN/APPLICATION REGISTER CODE SHEET

Use the following codes to complete the Loan/Application Register. The instructions to the HMDA-LAR explain the proper use of each code.

## Application or Loan Information

Type:

1—Conventional (any loan other than FHA, VA, FSA, or RHS loans)
2—FHA-insured (Federal Housing Administration)
3—VA-guaranteed (Veterans Administration)
4—FSA/RHS (Farm Service Agency or Rural Housing Service)

Purpose:

1—Home purchase (one-to-four family)
2—Home improvement (one-to-four family)
3—Refinancing (one-to-four family)
4—Multifamily dwelling (home purchase, home improvement, and refinancings)
5—Home-equity line of credit (one-to-four family)
6—Manufactured home

Owner-Occupancy:

1—Owner-occupied as a principal dwelling
2—Not owner-occupied
3—Not applicable

Action Taken:

1—Loan originated
2—Application approved but not accepted
3—Application denied by financial institution
4—Application withdrawn by applicant
5—File closed for incompleteness
6—Loan purchased by your institution

## Applicant Information

Race or National Origin:

1—American Indian or Alaska Native
2—Asian
3—Black or African American
4—Native Hawaiian or Other Pacific Islander
5—White
6—Hispanic or Latino
7—Information not provided by applicant in mail or telephone application
8—Not applicable

Sex:

1—Male
2—Female
3—Information not provided by applicant in mail or telephone application
4—Not applicable

## Type of Purchaser

0—Loan was not originated or was not sold in calendar year covered by register
1—FNMA (Federal National Mortgage Association)
2—GNMA (Government National Mortgage Association)
3—FHLMC (Federal Home Loan Mortgage Corporation)
4—FAMC (Federal Agricultural Mortgage Corporation)
5—Commercial bank
6—Savings bank or savings association
7—Life insurance company
8—Affiliate institution
9—Other type of purchaser

## Reasons for Denial (optional)

1—Debt-to-income ratio
2—Employment history
3—Credit history
4—Collateral
5—Insufficient cash (downpayment, closing costs)
6—Unverifiable information
7—Credit application incomplete
8—Mortgage insurance denied
9—Other

## HOEPA Status

0—Covered by TILA (Truth in Lending Act) but not HOEPA (Home Ownership and Equity Protection Act)
1—Covered by TILA and HOEPA
2—Not covered by TILA, or covered but no APR disclosed

BILLING CODE 6210–01–C

## Appendix B to Part 203—Form and Instructions for Data Collection on Race or National Origin and Sex

### I. Instructions on Collection of Data on Race or National Origin and Sex

[A. *Format.*]

You may list questions regarding the race or national origin and sex of the applicant on your loan application form, or on a separate form that refers to the application. (See the sample form below for recommended language.)

[B.] ►II.◄ *Procedures.*

[1] ►A.◄ You must ask the applicant for this information, but cannot require the applicant to provide it.

►B. You must offer the applicant the option of selecting one or more designations.◄

[2.] ►C.◄ If the applicant chooses not to provide the information for an application taken in person, note this fact on the form and note the data, to the extent possible, on the basis of visual observation or surname.

[3.] ►D.◄ Inform the applicant that the federal government is requesting his information in order to monitor compliance with federal statutes that prohibit lenders from discriminating against applicants on these bases. Inform the applicant that if the information is not provided where the application is taken in person, you are required to note the data on the basis of visual observation or surname.

[4.] ►E.◄ If an application is made entirely by telephone, [this information need not be requested] ►you are permitted to request this information but not required to do so◄. And the data need not be provided when an application is taken by mail, if the applicant fails to answer these questions on the application form. Whether an application was received by mail or telephone must be indicated, if it is not otherwise evident on the face of the application.

[5. The ''other block is available only to the applicant who chooses to indicate some other appropriate category for race or national origin. If completing the form based on visual observation, do not use this category; use one of the other five categories.]

BILLING CODE 6210–01–P

# SAMPLE DATA-COLLECTION FORM
# INFORMATION FOR GOVERNMENT MONITORING PURPOSES

The following information is requested by the federal government for certain types of loans related to a dwelling in order to monitor the lender's compliance with equal credit opportunity, fair housing, and home mortgage disclosure laws. You are not required to furnish this information, but are encouraged to do so. ▸You may select one or more designations for "Race or National Origin."◂ The law provides that a lender may not discriminate on the basis of this information, or on whether you choose to furnish it. However, if you choose not to furnish the information and you have made this application in person, under federal regulations the lender is required to note race or national origin and sex on the basis of visual observation or surname. If you do not wish to furnish the information, please check below.

**APPLICANT:**

☐ I do not wish to furnish this information

Race or National Origin:

☐ American Indian, Alaska[n] Native
☐ Asian [, Pacific Islander]
☐ Black ▸or African American◂
▸☐Native Hawaiian or Other Pacific Islander◂
☐ Hispanic ▸or Latino◂
☐ White
[ ☐Other (specify) _____ ]

Sex:

☐ Female
☐ Male

**CO-APPLICANT:**

☐ I do not wish to furnish this information

Race or National Origin:

☐ American Indian, Alaska[n] Native
☐ Asian [, Pacific Islander]
☐ Black ▸or African American◂
▸☐Native Hawaiian or Other Pacific Islander◂
☐ Hispanic ▸or Latino◂
☐ White
[ ☐Other (specify) _____ ]

Sex:

☐ Female
☐ Male

BILLING CODE 6210–01–C

## Supplement I to Part 203—Staff Commentary

### Introduction

1. *Status [and citations].* The commentary in this supplement is the vehicle by which the Division of Consumer and Community Affairs of the Federal Reserve Board issues formal staff interpretations of Regulation C (12 CFR part 203). [The parenthetical citations given are references to Appendix A to Regulation C, Form and Instructions for Completion of the HMDA Loan/Application Register.]

*Section 203.1—Authority, Purpose, and Scope*

1(c) *Scope.*

1. *General.* The comments in this section address issues affecting coverage of institutions ►and◄ exemptions from coverage [, and data-collection requirements].

2. *Meaning of refinancing.* A refinancing of a loan is the satisfaction and replacement of an existing obligation by a new obligation by the same borrower. The term ''refinancing'' refers to the new obligation. If the existing obligation is not satisfied and replaced, but is only renewed, modified, extended, or consolidated (as in certain modification, extension, and consolidation agreements), the transaction is not a refinancing for purposes of HMDA.

3. *Refinancing—coverage.* The regulation bases coverage, in part, on whether an institution originates home purchase loans. For determining whether an institution is subject to Regulation C or is exempt from coverage, an origination of a home purchase loan includes the refinancing of a home purchase loan. An institution may always determine the actual purpose of the existing obligation (for example, by reference to available documents). Alternatively, an institution may—

i. Rely on the statement of the applicant that the existing obligation was (or was not) a home purchase loan; or

ii. Assume that the new obligation is not a refinancing of a home purchase loan if either the existing obligation or the new obligation is not secured by a first lien on the dwelling.

4. *Refinancing—data collection.* The regulation requires collection and reporting of data on refinancings of home purchase and home improvement loans. An institution may always determine the actual purpose of the existing obligation (for example, by reference to available documents). Alternatively, an institution may—

i. Rely on the statement of the applicant that the existing obligation was (or was not) a home purchase or home improvement loan; or

ii. Assume that the new obligation is a refinancing of a home purchase or home improvement loan only if the existing obligation was secured by a lien on a dwelling; or

iii. Assume that the new obligation is a refinancing of a home purchase or home-improvement loan only if the new obligation will be secured by a lien on a dwelling.]

[5.] ►2.◄ *The broker rule and the meaning of ''broker'' and ''investor.''* For the purposes of the guidance given in this commentary, an institution that takes and processes a loan application and arranges for another institution to acquire the loan at or after closing is acting as a ''broker,'' and an institution that acquires a loan from a broker at or after closing is acting as an ''investor.'' (The terms used in this commentary may have different meanings in certain parts of the mortgage lending industry, and other terms may be used in place of these terms, for example in the Federal Housing Administration mortgage insurance programs.) Depending on the facts, a broker may or may not make a credit decision on an application (and thus it may or may not have reporting responsibilities). If the broker makes a credit decision, it reports that decision; if it does not make a credit decision, it does not report. If an investor reviews an application and makes a credit decision prior to closing, the investor reports that decision. If the investor does not review the application prior to closing, it reports only the loans that it purchases; it does not report the loans it does not purchase. Thus, an institution that makes a credit decision on an application prior to closing reports that decision regardless of whose name the loan closes in.

[6.] ►3.◄ *Illustrations of the broker rule.* Assume that, prior to closing, four investors receive the same application from a broker; two deny it, one approves it, and one approves it and acquires the loan. In these circumstances, the first two report denials, the third reports the transaction as approved but not accepted, and the fourth reports an origination (whether the loan closes in the name of the broker or the investor). Alternatively, assume that the broker denies a loan before sending it to an investor; in this situation, the broker reports a denial.

[7.] ►4.◄ *Broker's use of investor's underwriting criteria.* If a broker makes a credit decision based on underwriting criteria set by an investor, but without the investor's review prior to closing, the broker has made the credit decision. The broker reports as an origination a loan that it approves and closes, and reports as a denial an application that it turns down (either because the application does not meet the investor's underwriting guidelines or for some other reason). The investor reports as purchases only those loans it purchases.

[8.] ►5.◄ *Insurance and other criteria.* If an institution evaluates an application based on the criteria or actions of a third party other than an investor (such as a government or private insurer or guarantor), the institution must report the action taken on the application (loan originated, approved but not accepted, or denied, for example).

[9.] ►6.◄ *Credit decision of agent is decision of principal.* If an institution approves loans through the actions of an agent, the institution must report the action taken on the application (loan originated, approved but not accepted, or denied, for example). State law determines whether one party is the agent of another.

[10.] ►7.◄ *Affiliate bank underwriting (250.250 review).* If an institution makes an independent evaluation of the creditworthiness of an applicant (for example, as part of a preclosing review by an affiliate bank under 12 CFR 250.250, which interprets section 23A of the Federal Reserve Act), the institution is making a credit decision. If the institution then acquires the loan, it reports the loan as an origination whether the loan closes in the name of the institution or its affiliate. An institution that does not acquire the loan but takes another action reports that action.

[11.] ►8.◄ *Participation loan.* An institution that originates a loan and then sells partial interests to other institutions reports the loan as an origination. An institution that acquires only a partial interest in such a loan does not report the transaction even if it has participated in the underwriting and origination of the loan.

[12.] ►9.◄ *Assumptions.* An assumption occurs when an institution enters into a written agreement accepting a new borrower as the obligor on an existing obligation. An institution reports as a home purchase loan an assumption (or an application for an assumption) in the amount of the outstanding principal. If a transaction does not involve a written agreement between a new borrower and the institution, it is not an assumption for HMDA purposes and is not reported.

*Section 203.2—Definitions*

2(b) *Application.*

1. *Consistency with Regulation B.* Board interpretations that appear in the official staff commentary to Regulation B (Equal Credit Opportunity, 12 CFR part 202, Supplement I) are generally applicable to the definition of an application under Regulation C. However, under Regulation C the definition of an application does not include prequalification requests.

2. *Prequalification.* A prequalification request is a request by a prospective loan applicant ►(other than a request for preapproval)◄ for a preliminary determination on whether the prospective applicant would likely qualify for credit under an institution's standards, or on the amount of credit for which the prospective applicant would likely qualify. Some institutions evaluate prequalification requests through a procedure that is separate from the institution's normal loan application process; others use the same process. In either case, Regulation C does not require an institution to report prequalification requests on the HMDA–LAR, even though these requests may constitute applications under Regulation B.

2(c) *Branch office.*

1. *Credit union.* For purposes of Regulation C, a ''branch'' of a credit union is any office where member accounts are established or loans are made, whether or not the office has been approved as a branch by a federal or state agency. (*See* 12 U.S.C. 1752.)

2. *Depository institution.* A branch of a depository institution does not include a loan production office, the office of an affiliate, or the office of a third party such as a loan broker. (But see appendix A of this part, Paragraph ►I.C.6◄ [V.C.7], which requires certain depository institutions to report property location even for properties located outside those ►metropolitan areas◄ [MSAs] in which the institution has a home or branch office.)

3. *Nondepository institution.* A branch of a nondepository institution does not include the office of an affiliate or other third party such as a loan broker. (But [see appendix A of this part, Paragraph V.C.6, which requires] certain nondepository institutions ►must◄ [to] report property location even in ►metropolitan areas◄ [MSAs] where they do not have a physical location.)

2(d) *Dwelling.*

1. ►*Coverage*◄ [*Scope*]. The definition of ''dwelling'' is not limited to the principal or other residence of the applicant or borrower, and thus includes vacation or second homes and rental properties. A dwelling also includes [a mobile or manufactured home,] a multifamily structure (such as an apartment building) [, and a condominium or a cooperative unit. Recreational vehicles such as boats or campers are not dwellings for purposes of HMDA].

►2. *Exclusions.* Recreational vehicles such as boats or campers are not dwellings for purposes of HMDA. Also excluded are transitory residences—whose occupants previously occupied principal residences elsewhere and expect to do so again. Examples include hotels, hospitals, and college dormitories.◄

2(e) *Financial institution.*

►1. *General.* An institution that met the test for coverage under HMDA in year 1, and then ceases to meet the test (for example, because its assets fall below the threshold on December 31 of year 2) stops collecting HMDA data beginning with year 3. Similarly, an institution that did not meet the coverage test for a given year, and then meets the test in the succeeding year, begins collecting HMDA data for the calendar year following the year in which it meets the test for coverage. For example, a for-profit mortgage lending institution (other than a bank, savings association, or credit union) that, in year 1, falls below the thresholds specified in section 203.2(e)(2)(iii), but meets one of them in year 2 (and otherwise meets the criteria for coverage), need not collect data in year 2, but begins collecting data in year 3.

2. *Adjustment of exemption threshold for depository institutions.* Depository institutions with assets at or below $30 million are exempt from collecting data for 2000.

3. *Coverage after a merger.* Several scenarios of data-collection responsibilities for the calendar year of a merger are described below. Under all the scenarios, if the merger results in a covered institution, that institution must begin data collection January 1 of the following calendar year.

i. Two institutions are not covered by Regulation C because of asset size. The institutions merge. No data collection is required for the year of the merger (even if the merger results in a covered institution).

ii. A covered institution and an exempt institution merge. The covered institution is the surviving institution. For the year of the merger, data collection is required for the covered institution's transactions. Data collection is optional for transactions handled in offices of the previously exempt institution.

iii. A covered institution and an exempt institution merge. The exempt institution is the surviving institution, or a new institution is formed. Data collection is required for transactions of the covered institution that take place prior to the merger. Data collection is optional for transactions taking place after the merger date.

iv. Two covered institutions merge. Data collection is required for the entire year. The surviving or resulting institution files either a consolidated submission or separate submissions for that year.◄

►4. *Originations.* Institutions are reminded that coverage depends in part on whether they have originated home purchase loans. To determine whether their activities with respect to a particular loan constitute an origination, institutions should consult, among other parts of the staff commentary, the discussion of the broker rule under §§ 203.1(c) and 203.4(a).◄

[1.] ►5.◄ *Branches of foreign banks—treated as* [a] *bank*►*s*◄. A federal branch or a state-licensed insured branch of a foreign bank is a ''bank'' under section 3(a)(1) of the Federal Deposit Insurance Act (12 U.S.C. 1813(a)), and is covered by HMDA if it meets the tests for a depository institution found in section[s] 203.2(e)(1) [and 203.3(a)(1)] of Regulation C.

[2.] ►6.◄ *Branches and offices of foreign banks—treated as [a] for-profit mortgage lending institution*►*s*◄. Federal agencies, state-licensed agencies, state-licensed uninsured branches of foreign banks, commercial lending companies owned or controlled by foreign banks, and entities operating under section 25 or 25A of the Federal Reserve Act, 12 U.S.C. 601 and 611 (Edge Act and agreement corporations) are not ''banks'' under the Federal Deposit Insurance Act. These entities are nonetheless covered by HMDA if they meet the tests for a ►for-profit◄ nondepository mortgage lending institution found in section[s] 203.2(e)(2) [and 203.3(a)(2)] of Regulation C.

2[(f)] ►(g)◄ *Home improvement loan.*

[1. *Definition.* A home improvement loan is a loan that is made for the purpose of home improvement and that is classified by the institution as a home improvement loan.

2. *Statement of the applicant.* An institution may rely on the oral or written statement of an applicant regarding the proposed use of loan proceeds

3. *Home-equity lines.* An institution that has chosen to report home-equity lines of credit reports as a home improvement loan only the part of a home-equity line that is intended for home improvement. An institution that reports home-equity lines reports the disposition of all applications, not just originations.

4. *Classification requirement.* An institution has ''classified'' a loan as a home improvement loan if it has entered the loan on its books as a home improvement loan, or has otherwise coded or identified the loan as a home improvement loan. For example, an institution that has booked a loan or reported it on a ''call report'' as a home improvement loan has classified it as a home improvement loan. An institution may also classify loans as home improvement loans in other ways (for example, by color-coding loan files).]

[5.] ►1.◄ *Improvements to real property.* Home improvements include improvements both to a dwelling and to the real property on which the dwelling is located (for example, installation of a swimming pool, construction of a garage, or landscaping).

[6.] ►2.◄ *Commercial and other loans.* A ►home improvement◄ loan [for improvement purposes] ►may include a loan◄ originated outside an institution's [consumer] ►residential mortgage◄ lending division (such as a loan to improve an apartment building made through the commercial loan department)►.◄[is reported if the institution classifies it as a home improvement loan.]

[7. *Multiple-purpose loan.* A loan for home improvement and for other purposes is treated as a home improvement loan even if less than 50 percent of the total loan proceeds are to be used for improvement, provided the institution classifies the loan as a home improvement loan. (But see comment (2)(f)–3 of this supplement on home-equity lines of credit.)]

[8.] ►3.◄ *Mixed-use property.* A loan to improve property used for residential and commercial purposes (for example, a building containing apartment units and retail space) [satisfies the purpose requirement] ►is a home improvement loan◄ if the loan proceeds are ►used◄ primarily to improve the residential portion of the property. If the loan proceeds are ►used◄ to improve the entire property (for example, to replace the heating system), the loan [satisfies the purpose requirement] ►is a home improvement loan◄ if the property itself is primarily residential. An institution may use any reasonable standard to determine the primary use of the property, such as by square footage or by the income generated. An institution may select the standard to apply on a case-by-case basis. [To report the loan as a home improvement loan, the institution must also classify it as such.]

►4. *Multiple-category loans.* If a loan is a home improvement loan as well as a refinancing, an institution reports the loan as a home improvement loan.◄

2[(g)]►(h)◄ *Home purchase loan.*

1. *Multiple properties.* A home purchase loan includes a loan secured by one dwelling and used to purchase another dwelling.

2. *Mixed-use property.* A ►dwelling-secured◄ loan to purchase property used primarily for residential purposes (for example, an apartment building containing a convenience store) is a home purchase loan. An institution may use any reasonable standard to determine the primary use of the property, such as by square footage or by the income generated. An institution may select the standard to apply on a case-by-case basis.

3. *Farm loan.* A loan to purchase property used primarily for agricultural purposes is not a home purchase loan even if the property includes a dwelling. An institution may use any reasonable standard to determine the primary use of the property, such as by reference to the exemption from Regulation X (Real Estate Settlement Procedures, 24 CFR 3500.5(b)(1)) for a loan on property of 25 acres or more. An institution may select the standard to apply on a case-by-case basis.

4. *Commercial and other loans.* A home purchase loan ►may◄ include[s] a loan

originated outside an institution's residential mortgage lending division (such as a loan for the purchase of an apartment building made through the commercial loan department). [For home purchase loans, there is no classification test.]

5. *Construction and permanent financing.* A home purchase loan includes both a combined construction/permanent loan and the permanent financing that replaces a construction-only loan. It does not include a construction-only loan, which is considered ''temporary financing'' under Regulation C and is not reported.

[6. *Home-equity line.* An institution that has chosen to report home-equity lines of credit reports as a home purchase loan only the part that is intended for home purchase. An institution may rely on the applicant's oral or written statement about the proposed use of the funds. An institution that reports home-equity lines reports the disposition of all applications, not just the originations.]

►6. *Second mortgages that finance the downpayments on first mortgages.* If an institution making a first mortgage loan to a home purchaser also makes a second mortgage loan to the same purchaser to finance part or all the home purchaser's downpayment, the institution reports each loan separately as a home purchase loan.

7. *Multiple-category loans.* If a loan is a home purchase loan as well as a home improvement loan, refinancing, or home-equity line of credit, an institution reports the loan as a home purchase loan.◄

*Section 203.3—Exempt Institutions*

[3(a) *Exemption based on location, asset size, or number of home purchase loans.*

1. *General.* An institution that ceases to meet the tests for HMDA coverage (such as the 10 percent test for nondepository institutions) or becomes exempt may stop collecting HMDA data beginning with the next calendar year. For example, a bank whose assets are at or below the threshold on December 31 of a given year reports data for that full calendar year, in which it was covered, but does not report data for the succeeding calendar year.

2. *Adjustment of exemption threshold for depository institutions.* For data collection in 2000, the asset-size exemption threshold is $30 million. Depository institutions with assets at or below $30 million are exempt from collecting data for 2000.

3. *Coverage after a merger.* Several scenarios of data-collection responsibilities for the calendar year of a merger are described below. Under all the scenarios, if the merger results in a covered institution, that institution must begin data collection January 1 of the following calendar year.

i. Two institutions are exempt from Regulation C because of asset size. The institutions merge. No data collection is required for the year of the merger (even if the merger results in a covered institution).

ii. A covered institution and an exempt institution merge. The covered institution is the surviving institution. For the year of the merger, data collection is required for the covered institution's transactions. Data collection is optional for transactions handled in offices of the previously exempt institution.

iii. A covered institution and an exempt institution merge. The exempt institution is the surviving institution, or a new institution is formed. Data collection is required for transactions of the covered institution that take place prior to the merger. Data collection is optional for transactions taking place after the merger date.

iv. Two covered institutions merge. Data collection is required for the entire year. The surviving or resulting institution files either a consolidated submission or separate submissions for that year.

4. *Mergers versus purchases in bulk.* If a covered institution acquires loans in bulk from another institution (for example, from the receiver for a failed institution) but no merger or acquisition of an institution is involved, the institution reports the loans as purchased loans.]

*Section 203.4—Compilation of Loan Data*

*Paragraph 4(a) Data Format and Itemization.*

►1. *Reporting requirements.* i. An institution reports data on covered loans that it originated and covered loans that it purchased during the calendar year described in the report. An institution reports these data even if the loans were subsequently sold by the institution.

ii. An institution reports the data for applications for covered loans that did not result in originations—for example, applications that the institution denied or that the applicant withdrew during the calendar year described in the report.

iii. In the case of brokered loan applications or applications forwarded through a correspondent, the institution reports as originations loans that it approved and subsequently acquired according to a pre-closing arrangement (whether or not they closed in the institution's name). Additionally, the institution reports the data for all applications that did not result in originations—for example, applications that the institution denied or that the applicant withdrew during the calendar year covered by the report (whether or not they would have closed in the institution's name). For all of these loans and applications, the institution reports the required data regarding the borrower's or applicant's race or national origin, sex, and income.

iv. Originations are to be reported only once. If the institution is the loan broker or correspondent, it does not report as originations loans that it forwarded to another lender for approval prior to closing, and that were approved and subsequently acquired by that lender (whether or not they closed in the institution's name).

v. An institution reports applications that were received in the previous calendar year but were acted upon during the calendar year covered by the current register.

vi. A financial institution submits all required data to its supervisory agency in one package, with the prescribed transmittal sheet. An officer of the institution certifies to the accuracy of the data.

vii. The transmittal sheet states the total number of line entries contained in the accompanying data transmission.◄

[1. *Quarterly updating.* An institution must make a good-faith effort to record all required data concerning covered transactions—loan originations (including refinancings), loan purchases, and the disposition of applications that did not result in originations—fully and accurately within 30 days after the end of each calendar quarter. If some data are inaccurate or incomplete despite this good-faith effort, the error or omission is not a violation of Regulation C provided that the institution corrects and completes the information prior to reporting the HMDA–LAR to its regulatory agency.]

2. *Updating—agency requirements.* Certain state or federal regulations, such as the Federal Deposit Insurance Corporation's regulations, may require an institution to update its data more frequently than is required under Regulation C.

3. *Form of updating.* An institution may maintain the quarterly updates of the HMDA–LAR in electronic or any other format, provided the institution can make the information available to its regulatory agency in a timely manner upon request.

*Paragraph 4(a)(1) Application* ►*number and application*◄ *date.*

1. *Application date—consistency.* In reporting the date of application, an institution reports the date the application was received or the date shown on the application. Although an institution need not choose the same approach for its entire HMDA submission, it should be generally consistent (such as by routinely using one approach within a particular division of the institution or for a category of loans).

2. *Application date—application forwarded by a broker.* For an application forwarded by a broker, an institution reports the date the application was received by the broker, the date the application was received by the institution, or the date shown on the application. Although an institution need not choose the same approach for its entire HMDA submission, it should be generally consistent (such as by routinely using one approach within a particular division of the institution or for a category of loans).

3. *Application date—reinstated application.* If, within the same calendar year, an applicant asks an institution to reinstate a counteroffer that the applicant previously did not accept (or asks the institution to reconsider an application that was denied, withdrawn, or closed for incompleteness), the institution may treat that request as the continuation of the earlier transaction or as a new transaction. If the institution treats the request for reinstatement or reconsideration as a new transaction, it reports the date of the request as the application date.

►4. *Application or loan number.* An institution ensures that each reported identifying number is unique within the institution. If an institution's register contains data for branch offices, for example, the institution could use a letter or a numerical code to identify the loans or applications of different branches, or could assign a certain series of numbers to particular branches to avoid duplicate numbers. Institutions are strongly encouraged not to use the applicant's or borrower's name or social security number, for privacy reasons.

5. *Application—date of receipt.* For reporting purposes, the date a lender or broker receives an application is the date on which it or its agent first takes possession of a physical or electronic copy of the application in completed form. State law determines whether one party is the agent of another. For example, if a completed application is received by a lender on the Friday before a three-day weekend, and the lender uploads the application onto its computer system the following Tuesday, the lender should report Friday's date as the date it received the application.

6. *Application—year action taken.* An institution must report an application in the calendar year in which the institution takes final action on the application.◄

*Paragraph 4(a)(2) Type and purpose.*

►1. *Purpose—statement of applicant.* An institution may rely on the oral or written statement of an applicant regarding the proposed use of loan proceeds. For example, a lender could use a check-box on a loan application to determine whether or not the applicant intends to use loan proceeds for home improvement purposes.◄

[1. *Purpose—multiple-purpose loan.* If a loan is for home improvement and another covered purpose, an institution reports the loan as a home improvement loan if the institution classifies it as a home improvement loan. Otherwise the institution reports the loan as a home purchase loan or a refinancing, as appropriate. An institution may determine how to report such loans on a case-by-case basis.]

*Paragraph 4(a)(3) Occupancy.*

[1. *Occupancy—actual occupancy status.* If a loan relates to multifamily property, property located outside an MSA, or property in an MSA where the institution has no home or branch office, the institution may either report the actual occupancy status or report using the code for ''not applicable.'' (A nondepository institution may be deemed to have a home or branch office in an MSA under § 203.2(c)(2) of Regulation C.)]

[2.] ►1.◄ *Occupancy—multiple properties.* If a loan relates to multiple properties, the institution reports the owner occupancy status of the property for which property location is being reported. (See the comments to paragraph 4(a)(6), Property location.)

*Paragraph 4(a)(4) Loan amount.*

1. *Loan amount—counteroffer.* If an applicant accepts a counteroffer for an amount different from the amount initially requested, the institution reports the loan amount granted. If an applicant does not accept a counteroffer or fails to respond, the institution reports the loan amount initially requested.

2. *Loan amount—multiple-purpose loan.* [Except in the case of a home-equity line of credit, a]►A◄n institution reports the entire amount of the loan, even if only a part of the proceeds is intended for home purchase or home improvement.

[3. *Loan amount—home-equity line.* An institution that reports home-equity lines of credit reports only the part that is intended for home improvement or home purchase purposes. An institution may rely on the applicant's oral or written statement about the proposed use of the loan proceeds.]

[4.] ►3.◄ *Loan amount—assumption.* An institution that enters into a written agreement accepting a new party as the obligor on a loan reports the amount of the outstanding principal on the assumption as the loan amount.

*Paragraph 4(a)(5) Type of action taken and date.*

1. *Action taken—counteroffers.* If an institution makes a counteroffer to lend on terms different from the applicant's initial request (for example, for a shorter loan maturity ►or in a different amount◄) and the applicant does not accept the counteroffer or fails to respond, the institution reports the action taken as a denial ►on the original terms requested by the applicant.◄

2. *Action taken—rescinded transactions.* If a borrower rescinds a transaction after closing, the institution, on a case-by-case basis, may report the transaction either as an origination or as an application that was approved but not accepted.

3. *Action taken—purchased loans.* An institution reports the loans that it purchased during the calendar year, and does not report the loans that it declined to purchase.

4. *Action taken—conditional approvals.* If an institution issues a loan approval subject to the applicant's meeting underwriting conditions [(other than customary loan-commitment or loan closing conditions, such as a clear-title requirement or an acceptable property survey)] and the applicant does not meet them, the institution reports the action taken as a denial.

5. *Action taken date—approved but not accepted.* For a loan approved by an institution but not accepted by the applicant, the institution reports using any reasonable date, such as the approval date, the deadline for accepting the offer, or the date the file was closed. Although an institution need not choose the same approach for its entire HMDA submission, it should be generally consistent (such as by routinely using one approach within a particular division of the institution or for a category of loans).

6. *Action taken date—originations.* For loan originations, an institution generally reports the settlement or closing date. For loan originations that an institution acquires through a broker, the institution reports either the settlement or closing date, or the date the institution acquired the loan from the broker. If the disbursement of funds takes place on a date later than the settlement or closing date, the institution may use the date of disbursement. For a construction/permanent loan, the institution reports either the settlement or closing date, or the date the loan converts to the permanent financing. Although an institution need not choose the same approach for its entire HMDA submission, it should be generally consistent (such as by routinely using one approach within a particular division of the institution or for a category of loans).

►Notwithstanding this flexibility regarding the use of the closing date in connection with reporting the date action was taken, the year in which an origination goes to closing is the year in which the institution must report the origination.

7. *Action taken—pending applications.* An institution does not report any loan application still pending at the end of the calendar year; it reports that application on its register for the year in which final action is taken.◄

*Paragraph 4(a)(6) Property location.*

1. *Property location—multiple properties (home improvement/refinance of home improvement).* For a home improvement loan, an institution reports the property being improved. If more than one property is being improved, the institution reports the location of one of the properties or reports the loan using multiple entries on its HMDA–LAR (with unique identifiers) and allocating the loan amount among the properties.

2. *Property location—multiple properties (home purchase/refinance of home purchase).* For a home purchase loan, an institution reports the property taken as security. If an institution takes more than one property as security, the institution reports the location of the property being purchased if there is just one. If the loan is to purchase multiple properties and is secured by multiple properties, the institution reports the location of one of the properties or reports the loan using multiple entries on its HMDA–LAR (with unique identifiers) and allocating the loan amount among the properties.

3. *Property location—loans purchased from another institution.* The requirement to report the property location by census tract in a[n MSA] ►metropolitan area◄ where the institution has a home or branch office applies not only to loan applications and originations but also to loans purchased from another institution. This includes loans purchased from an institution that did not have a home or branch office in that ►metropolitan area◄ [MSA] and did not collect the property-location information.

4. *Property location—[mobile or] manufactured home.* If information about the potential site of a [mobile or] manufactured home is not available, an institution reports using the code for ''not applicable.''

5. *Property location—use of BNA.* At its option, an institution may report property location by using a block numbering area (BNA). The U.S. Census Bureau, in conjunction with state agencies, has established BNAs as statistical subdivisions of counties in which census tracts have not been established. BNAs are generally identified in census data by numbers in the range 9501 to 9989.99.

*Paragraph 4(a)(7) Applicant and income data.*

1. *Applicant data—completion by applicant.* An institution reports the monitoring information as provided by the applicant. For example, if an applicant checks the ►''Asian''◄ [''other''] box the institution reports using the ►''Asian''◄ [''other''] code.

2. *Applicant data—completion by lender.* If an applicant fails to provide the requested information for an application taken in person, the institution reports the data on the basis of visual observation or surname. [As stated in paragraph I.B.5 to Appendix B of this part, the institution does not use the ''other'' code, but selects from the categories listed on the form.]

3. *Applicant data—application completed in person.* When an applicant meets in

person with a lender to complete an application that was begun by mail or telephone, the institution must request the monitoring information. If the meeting occurs after the application process is complete, for example, at closing, the institution is not required to obtain monitoring information.

4. *Applicant data—joint applicant.* A joint applicant may enter the government-monitoring information on behalf of an absent joint applicant. If the information is not provided, the institution reports using the code for ''information not provided by applicant in mail or telephone application.''

5. *Applicant data—video and other electronic-application processes.* An institution that accepts applications through electronic media with a video component treats the applications as taken in person and collects the information about the race or national origin and sex of applicants. An institution that accepts applications through electronic media without a video component (for example, the Internet or facsimile) treats the applications as accepted by mail. [(See Appendix B of this part for procedures to be used for data collection.)]

6. *Income data—income relied on.* An institution reports the gross annual income relied on in evaluating the creditworthiness of applicants. For example, if an institution relies on an applicant's salary to compute a debt-to-income ratio but also relies on the applicant's annual bonus to evaluate creditworthiness, the institution reports the salary and the bonus to the extent relied upon. Similarly, if an institution relies on the income of a cosigner to evaluate creditworthiness, the institution includes this income to the extent relied upon. But an institution does not include the income of a guarantor who is only secondarily liable.

7. *Income data—co-applicant.* If two persons jointly apply for a loan and both list income on the application, but the institution relies only on the income of one applicant in computing ratios and in evaluating creditworthiness, the institution reports only the income relied on.

8. *Income data—loan to employee.* An institution may report ''NA'' in the income field for loans to employees to protect their privacy, even though the institution relied on their income in making its credit decisions.

*Paragraph 4(a)(8) Purchaser.*

1. *Type of purchaser—loan-participation interests sold to more than one entity.* An institution that originates a loan, and then sells it to more than one entity, reports the ''type of purchaser'' based on the entity purchasing the greatest interest, if any. If an institution retains a majority interest, it does not report the sale.

►2. *Type of purchaser—swapped loans.* Loans ''swapped'' for mortgage-backed securities are to be treated as sales; the purchaser is the type of entity receiving the loans that are swapped.◄

*4(c) Optional data.*

1. *Agency requirements.* Certain state or federal entities, such as the Office of Thrift Supervision, require institutions to report the reasons for denial even though this is optional reporting under HMDA and Regulation C.

*4(d) Excluded data.*

[1. *Loan pool.* The purchase of an interest in a loan pool (such as a mortgage-participation certificate, a mortgage-backed security, or a real estate mortgage investment conduit or ''REMIC'') is a purchase of an interest in a security under HMDA and is not reported on the HMDA–LAR.]

►1. *Mergers, purchases in bulk, and branch acquisitions.* If a covered institution acquires loans in bulk from another institution (for example, from the receiver for a failed institution) but no merger or acquisition of the institution, or acquisition of a branch, is involved, the institution reports the loans as purchased loans.◄

Section 203.5'Disclosure and Reporting

*5(a) Reporting to agency.*

►1. *Submission of data.* Institutions submit data to their supervisory agencies in an automated, machine-readable form. The format conforms to that of the HMDA–LAR. An institution should contact its federal supervisory agency for information regarding procedures and technical specifications for automated data submission; in some cases, agencies also make software for automated data submission available to institutions. The data are edited before submission, using the edits included in the agency-supplied software or equivalent edits in software available from vendors or developed in-house. (Institutions that report twenty-five or fewer entries on their HMDA–LAR may collect and report the data in paper form. An institution that submits its register in nonautomated form sends two copies that are typed or computer printed and must use the format of the HMDA–LAR (but need not use the form itself). Each page is numbered, and the total number of pages are given (for example, ''Page 1 of 3'').

2. *Procedures for entering data.* The required data are entered in the register for each loan origination, each application acted on, and each loan purchased during the calendar year. The institution should decide on the procedure it wants to follow—for example, whether to begin entering the required data, when an application is received, or to wait until final action is taken (such as when a loan goes to closing or an application is denied).

3. *Options for collection.* An institution may collect data on separate registers at different branches, or on separate registers for different loan types (such as for home purchase or home improvement loans, or for loans on multifamily dwellings). Entries need not be grouped on the register by metropolitan area, or chronologically, or by census tract numbers, or in any other particular order.◄

[1.] ►4.◄ *Change in supervisory agency.* If the supervisory agency for a covered institution changes (as a consequence of a merger or a change in the institution's charter, for example), the institution must report data to its new supervisory agency for the year of the change and subsequent years.

[2] ►5.◄ *Subsidiaries.* An institution is a subsidiary of a bank or savings association (for purposes of reporting HMDA data to the parent's supervisory agency) if the bank or savings association holds or controls an ownership interest that is greater than 50 percent of the institution.

►6. *Transmittal sheet—additional data submissions.* Each additional data submission that becomes necessary (for example, because the institution discovers that data were omitted from the initial submission, or because revisions are called for) must be accompanied by a separate transmittal sheet.

7. *Transmittal sheet—revisions or deletions.* If a data submission involves revisions or deletions of previously submitted data, state the total of all line entries contained in that submission, including both those representing revisions or deletions of previously submitted entries, and those that are being resubmitted unchanged or are being submitted for the first time. Depository institutions must provide a list of the metropolitan areas in which they have home or branch offices.

*5(b) Public disclosure of statement.*

1. *Business day.* For purposes of § 203.5, a business day is any calendar day other than a Saturday, Sunday, or legal public holiday.

2. *Format.* An institution may make the disclosure statement available in paper form or, if the person requesting the data agrees, in automated form (such as by PC diskette or computer tape).

*5(c) Public disclosure of loan/application register.*

1. *Format.* An institution may make the modified register available in paper or automated form (such as by PC diskette or computer tape). Although institutions are not required to make the modified register available in census tract order, they are strongly encouraged to do so in order to enhance its utility to users.◄

*5(e) Notice of availability.*

1. *Poster—suggested text.* [The suggested wording of the poster text provided in Appendix A of this part is optional. An institution may use other text that meets the requirements of the regulation.] ►An institution may use any text that meets the requirements of the regulation. Some of the federal financial regulatory agencies and HUD provide HMDA posters that an institution can use to inform the public of the availability of its HMDA data, or the institution may create its own posters. If an institution prints its own, the following language is suggested but is not required:

*Home Mortgage Disclosure Act Notice*

*The HMDA data about our residential mortgage lending are available for review. The data show geographic distribution of loans and applications; race, gender, and income of applicants and borrowers; and information about loan approvals and denials. Inquire at this office regarding the locations where HMDA data may be inspected.*

2. *Additional language for institutions making the disclosure statement available on request.* An institution that posts a notice informing the public of the address to which a request should be sent could include the following sentence, for example, in its general notice: ''To receive a copy of these data send a written request to [address].''◄

*Section 203.6—Enforcement*

*6(b) Bona fide errors.*

1. *Bona fide error—information from third parties.* An institution that obtains the property-location information for applications and loans from third parties (such as appraisers or vendors of ''geocoding'' services) is responsible for ensuring that the information reported on its HMDA–LAR is correct. [An incorrect entry for a census tract number is a bona fide error, and is not a violation of the act or regulation, provided that the institution maintains reasonable procedures to avoid such errors (for example, by conducting periodic checks of the information obtained from these third parties).]

By order of the Board of Governors of the Federal Reserve System, December 8, 2000.

**Jennifer J. Johnson,**

*Secretary of the Board.*

[FR Doc. 00–31796 Filed 12–14–00; 8:45 am]

BILLING CODE 6210–01–P

Federal Register

Friday,
December 15, 2000

# Part IV

# Department of the Interior

## 25 CFR Part 1000

## Office of the Assistant Secretary—Indian Affairs; Tribal Self-Governance; Final Rule

**DEPARTMENT OF THE INTERIOR**

**25 CFR Part 1000**

**RIN 1076–AD21**

## Office of the Assistant Secretary—Indian Affairs; Tribal Self-Governance

**AGENCY:** Office of the Assistant Secretary—Indian Affairs, Interior.

**ACTION:** Final rule.

**SUMMARY:** This is a rule to implement Tribal Self-Governance, as authorized by Title IV of the Indian Self-Determination and Education Assistance Act. This rule has been negotiated among representatives of Self-Governance and non-Self-Governance Tribes and the U.S. Department of the Interior. The intended effect is to transfer to participating Tribes control of, funding for, and decision making concerning certain Federal programs.

**EFFECTIVE DATE:** January 16, 2001.

**FOR FURTHER INFORMATION CONTACT:** Questions concerning this rule should be directed to: William Sinclair, Director, Office of Self-Governance, MS–2548 MIB, 1849 C Street NW, Washington, DC, 20240; telephone: 202–219–0240; electronic mail: William__Sinclair@IOS.DOI.GOV

**SUPPLEMENTARY INFORMATION:** These regulations are to implement Title II of Pub. L. 103–413, the Indian Self-Determination Act Amendments of 1994. This Act established the Tribal Self-Governance program on a permanent basis and was added as Title IV (Tribal Self Governance Act of 1994) of the Indian Self-Determination and Education Assistance Act of 1975 (the ISDEA) (Pub. L. 93–638). Title I of Pub. L. 103–413 consisted of amendments to the self-determination contracting provision of the ISDEA and regulations for Title I of Pub. L. 103–413 have already been promulgated. When Pub. L. 93–638 is mentioned in these regulations, it generally refers to what are now Sections 109 and Title I of the ISDEA, as amended.

The ISDEA has been amended by Congress by the following:

Pub. L. 98–250 Technical Amendments to Indian Self-Determination and Education Assistance Acts, April 3, 1984;

Pub. L. 100–202 Continuing Appropriations, Fiscal year 1988, December 22, 1987;

Pub. L. 100–446 Department of the Interior and Related Agencies Appropriations Act, 1989, September 27, 1988;

Pub. L. 100–472 Indian Self-Determination And Education Assistance Act Amendments of 1988, October 5, 1988;

Pub. L. 100–581 Review of Tribal Constitutions and Bylaws, November 1, 1988;

Pub. L. 101–301 Indian Law: Miscellaneous Amendments, May 24, 1990;

Pub. L. 101–512 Department of the Interior and Related Agencies Appropriations Act, 1991, November 5, 1990;

Pub. L. 101–644 Indian Arts and Crafts Act of 1990, November 29, 1990;

Pub. L. 102–184 Tribal Self-Governance Demonstration Project Act, December 4, 1991;

Pub. L. 103–413 Indian Self-Determination Act Amendments of 1994, October 25, 1994;

Pub. L. 103–435 Indian Technical Corrections, November 2, 1994;

Pub. L. 104–109 Technical Corrections to Law Relating to Native Americans, February 12, 1996;

Pub. L. 104–208 Omnibus Appropriations Act, September 30, 1996.

Since most of the legal citations are to Pub. L. 103–413, the Indian Self-Determination Act Amendments of 1994, the following table may be used to find pertinent parts of this act in 25 U.S.C.:

| Section of Pub. L. 103–413 | 25 U.S.C. part |
|---|---|
| Sections 202, 203 and 401. | 25 U.S.C. 458aa |
| Section 402 | 25 U.S.C. 458bb |
| Section 403 | 25 U.S.C. 458cc |
| Section 404 | 25 U.S.C. 458dd |
| Section 405 | 25 U.S.C. 458ee |
| Section 406 | 25 U.S.C. 458ff |
| Section 407 | 25 U.S.C. 458gg |
| Section 408 | 25 U.S.C. 458hh |

The following table may be used to find the pertinent parts of Pub. L. 93–638, the ISDEA:

| Section of Pub. L. 93–638 | 25 U.S.C. part |
|---|---|
| Section 3 | 25 U.S.C. 450a |
| Section 4 | 25 U.S.C. 450b |
| Section 5 | 25 U.S.C. 450c |
| Section 6 | 25 U.S.C. 450d |
| Section 9 | 25 U.S.C. 450e–1 |
| Section 102 | 25 U.S.C. 450f |
| Section 103 | 25 U.S.C. 450h |
| Section 104 | 25 U.S.C. 450i |
| Section 105 | 25 U.S.C. 450j |
| Section 106 | 25 U.S.C. 450j–1 |
| Section 107 | 25 U.S.C. 450k |
| Section 108 | 25 U.S.C. 450l |
| Section 109 | 25 U.S.C. 450m |
| Section 110 | 25 U.S.C. 450m–1 |
| Section 111 | 25 U.S.C. 450n |

The Indian Self-Determination Act Amendments of 1988 (Pub. L. 100–472), authorized the Tribal Self-Governance Demonstration Project for a 5-year period and directed the Secretary to select up to 20 Tribes to participate. The purpose of the demonstration project was to transfer to participating Tribes the control of, funding for, and decision making concerning certain Federal programs, services, functions and activities or portions thereof. In 1991, there were 7 annual funding agreements under the project, and this expanded to 17 in 1992. In 1991, the demonstration project was extended for an additional 3 years and the number of Tribes authorized to participate was increased to 30 (Pub. L. 102–184). The number of self-governance agreements increased to 19 in 1993 and 28 in 1994. The 28 agreements in 1994 represented participation in self-governance by 95 Tribes authorized to participate.

After finding that the Demonstration Project had successfully furthered Tribal self-determination and self-governance, Congress enacted the ''Tribal Self-Governance Act of 1994'', Public Law 103–413 that was signed by the President on October 25, 1994. The Tribal Self-Governance Act of 1994 made the Demonstration Project a permanent program and authorized the continuing participation of those Tribes already in the program.

A key feature of the 1994 Act included the authorization of up to 20 Tribes per year in the program, based on their successfully completing a planning phase, being duly authorized by the Tribal government body and demonstrating financial stability and management capability. The Act was amended by Public Law 104–208 on September 30, 1996, to allow up to 50 Tribes annually to be selected from the applicant pool. In 1996, the Act was also amended by Public Law 104–109, ''An Act to make certain technical corrections and law related to Native Americans''. Section 403 was amended to state:

> (1) INCORPORATE SELF-DETERMINATION PROVISIONS.—At the option of a participating Tribe or Tribes, any or all provisions of title I of this Act shall be made part of an agreement entered into under title III of this Act or this title. The Secretary is obligated to include such provisions at the option of the participating Tribe or Tribes. If such provision is incorporated, it shall have the same force and effect as if set out in full in title III or this title.

The number of annual funding agreements grew by one to 29 in 1995 and grew to 53 and 60 agreements in 1996 and 1997, respectively, to include 180 and 202 Tribes. Self-Governance has continued to grow. In 1999, there were 67 annual funding agreements

with BIA covering 209 Federally recognized Tribes. Also in 1999, there were three annual funding agreements between Self-Governance Tribes and non-BIA bureaus.

The Tribal Self-Governance Act of 1994, as amended, authorizes the following: (1) The Director of the Office of Self-Governance may select up to 50 Tribes annually from the applicant pool to participate in Tribal Self-Governance. (2) To be a member of the applicant pool each Tribe must have: (a) Successfully completed a planning phase that includes budgetary research and internal Tribal government planning and organizational preparation; (b) have requested to participate in Self-Governance by resolution; and (c) have demonstrated financial stability and financial management capability for the previous 3 years as evidenced by the Tribe having no material audit exceptions in their required annual audits of Self-Determination contracts. (3) The Secretary is to negotiate and enter into annual written funding agreements with the governing body of each participating Tribe that will allow that Tribe to plan, conduct, consolidate and administer programs that were administered by the Bureau of Indian Affairs (BIA) without regard to agency or office within which such programs were administered. Subject to such terms of the agreement, the Tribes are also authorized to redesign or consolidate programs and reallocate funds. (4) The Secretary is to negotiate annual funding agreements with Tribes for programs administered by the Department other than through BIA that are otherwise available to Indian Tribes. Annual funding agreements may also include programs from non-BIA bureaus that have a special geographic, historic or cultural significance to the participating Tribe. (5) Tribes may retrocede all or a portion of the programs. (6) For construction projects, the parties may negotiate specific provisions of the Office of Federal Procurement and Policy Act and Federal Acquisition Regulations for inclusion in annual funding agreements. If not included, then such provisions do not apply. (7) Not later than 90 days before the effective date of the agreements, the agreements are to be sent to the Congress and to potentially affected Tribes. (8) Funding agreements shall provide for advance payments to the Tribes of amounts equal to what the Tribe would be eligible to receive under contracts and grants under this Act. This is to include direct program and contract support costs in addition to any funds that are specifically or functionally related to the provision of benefits and services by the Secretary to the Tribe or its members without regard to the organizational level within the Department where such functions are provided. (9) Except as otherwise provided by law, the Secretary shall interpret laws and regulations in a manner that will facilitate the inclusion of programs and the implementation of the agreements. (10) The Secretary has 60 days from the receipt of a Tribal request for a waiver of Departmental regulations in which to approve or deny such a request; denial can only be based upon a finding that such a waiver is prohibited by Federal law. (11) An annual report is to be submitted to the Congress regarding, among other things, the identification of the costs and benefits of Self-Governance and the independent views of the participating Tribes. The Secretary is to publish in the **Federal Register**, after consultation with the Tribes, a list of, and programmatic targets for, non-BIA programs eligible for inclusion in annual funding agreements. (12) Nothing in the Act shall be construed to limit or reduce in any way the services, contracts or funds that any other Indian Tribes or Tribal organizations are eligible to receive under any applicable Federal law or diminish the Secretary's trust responsibility to Indian Tribes, individual Indian or Indians with trust allotments.

The Act also authorized the formation of a negotiated rulemaking committee if so requested by a majority of the Indian Tribes with Self-Governance agreements. Such a request was made to the Department of the Interior and a rule making committee was formed. Under section 407 of the Act, membership was restricted to Federal and Tribal government representatives, with a majority of the Tribal members representing Tribes with agreements under the Act. Eleven Tribal representatives joined the Committee. Seven Tribal representatives were from Tribes with Self-Governance agreements and four were from Tribes that were not in the Self-Governance Program. Formation of the Rulemaking Committee was announced in the **Federal Register** on February 15, 1995.

The first meeting of the Joint Tribal/Federal Self-Governance Negotiated Rule Making Committee was held in Washington, DC on May 18,1995 prior to publication of the proposed rule, a total of 12 meetings of the full Committee were held in different locations throughout the country. Subsequently, several meetings were held to review public comments and to negotiate changes in the final rule. The last meeting was held in Washington, DC in March 1999. There were numerous workgroup meetings and teleconferences during this period that were used to develop draft material and exchange information in support of the full Committee meetings. At the first meeting of the Committee, protocols were developed. The main provisions of the protocols were: (1) The Committee meetings were open, and minutes kept. The Federal Advisory Committee Act did not apply under the Unfunded Mandates Reform Act of 1995. (2) A quorum consisted of 8 members, including 7 Tribal members and 1 Federal member. The Tribal and Federal representatives each selected co-chairs for the Committee and an alternate. (3) The Committee operated by consensus of the Federal and Tribal members and formed 5 working groups to address specific issues and make recommendations to the Committee. (4) The intended product of the negotiations is proposed regulations developed by the Committee on behalf of the Secretary and Tribal representatives. The Secretary agreed to use the preliminary report and the recommendations on the final regulations, developed by the Committee, as the basis for the Notice of Proposed Rulemaking. (5) The Committee has reviewed all comments received from the notice of the Proposed Rule making and has submitted a final report with recommendations to the Secretary for promulgation of a final rule. (6) The Federal Mediation and Conciliation Services was used to facilitate meetings.

The proposed regulation was published in the **Federal Register** on February 12, 1998 with a 90-day public comment period. Topics on which the Negotiating Committee had not reached agreement were identified in a preamble section titled, ''Key Areas of Disagreement.'' The **Federal Register** notice specifically invited comments on these areas. Fifty-four comments were received from a wide variety of Tribal groups and individual Tribes, Federal entities, and other groups and individuals. Many comments presented positions on the areas of disagreement. Subpart S, which pertained to Property Donation in the preamble of the proposed rule, pertains to Conflicts of Interest in the final rule. Property Donation is now in subpart Q of the final rule.

To facilitate comparison from the Proposed Rule to the Final Rule, the following table is reflective of the section numbers from proposed to final. Sections 1000.1–1000.73 maintain the

same section numbers from proposed to final rule.

| Proposed | Final | Proposed | Final | Proposed | Final | Proposed | Final | Proposed | Final | Proposed | Final |
|---|---|---|---|---|---|---|---|---|---|---|---|
| .78 | .80 | .111 | .121 | .160 | .170 | .201 | .221 | .266 | .307 | .318 | .359 |
| .79 | .81 | .112 | .122 | .161 | .171 | .202 | .222 | .267 | .308 | .319 | .360 |
| .80 | .82 | .113 | .125 | .162 | .172 | .203 | .223 | .268 | .309 | .320 | .361 |
| .81 | .83 | .114 | .126 | .165 | .173 | .204 | .224 | .269 | .310 | .321 | .362 |
| .82 | .84 | .115 | .128 | .166 | .173 | .205 | .225 | .270 | .311 | .322 | .363 |
| .83 | .85 | .116 | .129 | .167 | .173 | .206 | .226 | .271 | .312 | .323 | .364 |
| .84 | .86 | .117 | .130 | .168 | .174 | .207 | .227 | .272 | .313 | .324 | .365 |
| .85 | .87 | .118 | .131 | .169 | .175 | .208 | .228 | .273 | .314 | .325 | .366 |
| .86 | .88 | .119 | .132 | .170 | .176 | .209 | .229 | .274 | .315 | .326 | .367 |
| .87 | .89 | .120 | .133 | .171 | .177 | .210 | .230 | .275 | .316 | .339 | .380 |
| .88 | .91 | .121 | .134 | .172 | .178 | .211 | .231 | .276 | .317 | .340 | .381 |
| .89 | .92 | .122 | .135 | .173 | .179 | .212 | .232 | .277 | .318 | .341 | .382 |
| .90 | .93 | .123 | .136 | .174 | .180 | .220 | .240 | .289 | .330 | .352 | .390 |
| .91 | .94 | .124 | .137 | .175 | .181 | .221 | .241 | .290 | .331 | .353 | .391 |
| .92 | .95 | .125 | .138 | .176 | .182 | .222 | .242 | .291 | .332 | .354 | .392 |
| .93 | .96 | .126 | .139 | .180 | .190 | .223 | .243 | .292 | .333 | .355 | .393 |
| .94 | .97 | .127 | .140 | .181 | .191 | .224 | .245 | .293 | .334 | .356 | deleted |
| .95 | .98 | .128 | .141 | .182 | .192 | .225 | .246 | .294 | .335 | .357 | .394 |
| .96 | .99 | .129 | .142 | .183 | .193 | .226 | .247 | .295 | .336 | .358 | .395 |
| .97 | .100 | .130 | .143 | .184 | .194 | .227 | .248 | .296 | .337 | .359 | .396 |
| .98 | .101 | .150 | .160 | .185 | .195 | .228 | .249 | .297 | .338 | .360 | .400 |
| .99 | .102 | .151 | .161 | .186 | .196 | .229 | .250 | .298 | .339 | .361 | .401 |
| .100 | .103 | .152 | .162 | .187 | .197 | .230 | .251 | .310 | .350 | .362 | .402 |
| .101 | .104 | .153 | .163 | .188 | .198 | .259 | .300 | .311 | .351 | .363 | .403 |
| .102 | .105 | .154 | .164 | .190 | .210 | .260 | .301 | .312 | .352 | .364 | .404 |
| .103 | .106 | .155 | .165 | .191 | .211 | .261 | .302 | .313 | .353 | .365 | .405 |
| .104 | .107 | .156 | .166 | .192 | .212 | .262 | .303 | .314 | .354 | .366 | .406 |
| .105 | .108 | .157 | .167 | .193 | .213 | .263 | .304 | .315 | .355 | .367 | .407 |
| .106 | .109 | .158 | .168 | .194 | .214 | .264 | .305 | .316 | .356 | | |
| .110 | .120 | .159 | .169 | .200 | .220 | .265 | .306 | .317 | .358 | | |

**Summary of Regulations and Comments Received**

The narrative and discussion of comments below is keyed to specific subparts of the rule. Matters addressed under the heading ''Key Areas of Disagreement'' in the Notice of Proposed Rulemaking are discussed under the appropriate subpart.

*Subpart A—General Provisions*

Summary of Subpart

This Subpart provides interpretation of the language used throughout the Self-Governance Determination and Education Assistance Act of 1975, as amended, 25 U.S.C. 450. Subpart A also addresses the purpose and scope of the regulation and describes Congressional perspectives on the Tribal Self-Governance Act of 1994.

Comments

Several comments requested that the use of the word ''Act'' be clarified. The ''Act'' was then determined to mean the Tribal Self-Governance Act, Title IV of the Indian Self-Determination and Education Assistance Act of 1975.

A suggestion that the definition of construction management services be deleted from Section 1000.2 was accepted.

One comment suggested that a regulation be developed that would address tribal involvement in the budgets of non-BIA bureaus. This suggestion was not accepted. For budget consultation purposes, non-BIA bureaus can participate in the Self-Governance conferences, BIA budget consultations and their own consultations as a result of specific Self-Governance tribal requests. In addition, § 1000.4(c)(7) addresses communication with Tribal governments regarding budgetary matters.

There were many comments concerning the definition of inherently Federal functions. While there is no definition of inherently Federal functions contained in this rule, the Committee agreed that:

Sections 1000.91 through 1000.109 contain detailed provisions explaining what funds are available for inclusion in a BIA AFA. Sections 1000.94 and 1000.97 define ''residual funds'' and ''Tribal shares'', respectively. In defining what is a residual, a critical step is to determine what functions are inherently Federal. The regulations do not define the term ''inherently Federal'' function. The Department will decide what functions are residual or inherently Federal on a case by case basis after consultation with the Office of the Solicitor. For current guidance on inherently Federal functions (IFF) determinations, please see Solicitor's memorandum dated May 17, 1997. The Memorandum is available on the Office of Self-Governance's Internet web page or can be requested directly from the Office of Self-Governance. Determination that functions are inherently Federal shall be applied consistently in Central Office and all regional offices to all Tribes in a consistent and uniform manner. The Department shall provide information on why specific functions have been determined inherently Federal to Tribes in accordance with § 1000.95.

Several comments suggested that the definition of Tribal shares should reference the statute. This suggestion was accepted and the definition of Tribal shares was also changed to be identical with the definition of Tribal shares in § 1000.97.

Several comments noted that the definition of BIA and non-BIA programs does not mention program jointly administered with other Federal agencies. The definitions were not changed to accommodate this suggestion because the Committee believed that the issue has been addressed in § 1000.93. Several other comments suggested that annual

funding agreement for BIA and non-BIA programs be included in this definition section. This suggestion was not included and the definitions of annual funding agreement for BIA and non-BIA programs are covered in §§ 1000.81 and 1000.121 respectively.

Several comments recommended that a definition of a self-determination contract should be included in the definition section and be broad enough to have contracts also include as part of the definition the subcontracts between Tribal members and their Consortium for the operation of Federal programs. The suggestion to define self-determination contracts was not accepted because it is defined in Pub.L. 93–638. Further, the Act states that to be eligible for Self-Governance, a Tribe, among other things, must have ''no material audit exception in the required annual audit of the self-determination contracts of the Tribes'' [Title I sec. 402(c)]. Subcontracts between member Tribes and their Consortium are not considered to be the same as self-determination contracts.

*Subpart B—Selection of Additional Tribes for Participation in Tribal Self-Governance*

Summary of Subpart

This subpart describes the eligibility and selection process that the Secretary uses to decide which Indian Tribes may participate in Tribal self-governance as authorized by section 402 of the Tribal Self Governance Act of 1994. Subpart B also describes when a Tribe withdraws from an AFA. It also specifies the documents that Tribes must submit for admission into the applicant pool and describes what a Tribe must do during the planning phase. The subpart explains what a ''material audit exception'' is and what the consequences are of having a ''material audit exception''. This subpart also summarizes what happens if a Tribe wishes to withdraw from a Consortium's annual funding agreement and how disputes between the Consortium and withdrawing Tribe are handled.

Comments

A comment suggested that although the Act does not employ standard accounting terms, it seems that the intent of the law is that applicants must have three successive audits that do not disclose any material weakness; consequently the comment recommended that 1000.21 be changed to reflect that a material audit exception is one where there is an identified material weakness or finding of substantial financial mismanagement. This suggestion was accepted. Another comment recommend that the level of questioned and subsequently disallowed costs should be changed from 5 percent of the total expenditures to a dollar threshold of anything in excess of $10,000. This recommendation was accepted because the percentage threshold could conceivably allow Tribes to enter Self-Governance that had financially mismanaged several millions of dollars given that some Tribes have total expenditures that exceed $100 million. Further, Office of Management and Budget (OMB) Circular A–133, which has been adopted as a common rule by the Department of the Interior requires auditors to report questioned costs that are greater than $10,000.

A comment recommended that participating Tribes that are members of a Consortium and are recipients of contracts with the Consortium for the delivery of programs covered by the annual funding agreement should be considered as eligible for entrance into Self-Governance once they have had three years of subcontracting experience free of material audit exceptions as defined in § 1000.21. This suggestion was not accepted because the Act states that to be eligible a Tribe, among other things, must have ''* * * no material audit exceptions in the required annual audit of the self-determination contracts of the Tribes'' (Title IV sec. 402(c)(2)). Subcontracts between member Tribes and their Consortium are not considered to be the same as self-determination contracts.

Several comments addressed the concern about what happens to funding and project delivery schedules for Indian Reservation Road projects if a member Tribe withdraws from a Consortium. It is anticipated that this issue will be a subject of the separate Tribal-Federal negotiated rulemaking process established under Transportation Equity Act for the 21st Century (TEA–21) (23 U.S.C. 202(d)(2)(C)), Pub. L. 105–178, and therefore was not addressed in this regulation.

Another comment said that § 1000.33(b) implies that a Tribe may withdraw from a Consortium within the middle of the year and suggested deleting reference to the 90-day Congressional review period. However, § 1000.32(c) indicates that the effective date of any withdrawal is the date on which the current funding agreement expires unless there is mutual agreement between the Tribe, Consortium, OSG and the appropriate bureau, in which case any and all issues would have to be resolved at that time. This suggestion was not accepted.

A comment identified a confusion in § 1000.34(b)(1) with the words ''within 10 days'' because it was unclear as to the reference point. Those words have been replaced with ''at least 5 days before the 90-day Congressional review''. Another comment suggested that the chart in § 1000.34 be modified to identify who the non-BIA official is who is receiving the decision from the non-BIA bureau head. This was accepted and the chart modified. The comment further asserts that the Office of Indian Education Programs (OIEP) is not properly identified. The chart was modified to specifically identify OIEP.

*Subpart C—Section 402(d) Planning and Negotiation Grants*

Summary of Subpart

Subpart C describes the criteria and procedures for awarding various self-governance negotiation and planning grants. These grants are discretionary and will be awarded by the Director of the Office of Self-Governance (OSG). The award amount and number of grants depends upon Congressional appropriation. If funding in any year is insufficient to meet total requests for grants and financial assistance, priority will be given first to negotiation grants and second to planning grants.

Negotiation grants are non-competitive. In order to receive a negotiation grant, a Tribe/Consortium must first be selected from the applicant pool and then submit a letter affirming its readiness to negotiate and requesting a negotiation grant. This subpart also indicates that Tribe/Consortium may also elect to negotiate for a self-governance agreement if selected from the applicant pool without applying for or receiving a negotiation grant. Planning grants will be awarded to Tribes/Consortia requesting financial assistance in order to complete the planning phase requirement for admission into the applicant pool.

Comments

A few comments requested that language be added to subpart C that indicate a commitment by the Department to provide funds annually for planning and negotiation grants as well as short fall funds to assist in implementing the Act. The Committee agreed that the Department cannot commit funding that is not appropriated. Another comment indicated that the language at § 1000.50(b), concerning material audit exceptions, was confusing and the Committee agreed to change the language from ''be identified as eligible'' to ''be qualified as eligible.''

*Subpart D—Other Financial Assistance for Planning and Negotiating Grants for Non-BIA Programs*

Summary of Subpart

This subpart describes the financial assistance for planning and negotiating non-BIA programs available to any Tribe/Consortium that:

(a) Has an existing AFA;

(b) Is in the applicant pool; or

(c) Has been selected from the applicant pool.

Tribes/Consortia may submit only one application per year for a grant under this subpart. This financial assistance will support information gathering, analysis, and planning activities that may involve consulting with appropriate non-BIA bureaus, and negotiation activities. The subpart also describes the selection criteria, scoring, and notification process that Office of Self Governance will use to award planning and negotiation grants for a non-BIA program. The decision of the Director of OSG to not award a planning or negotiation grant for a non-BIA program is final for the Department.

Comments

A comment asked that the Director of the Office of Self Governance establish selection criteria and a review committee to select grants. Selection criteria are established at § 1000.70. The Committee believes that a review committee is an unnecessary and burdensome requirement. Several comments indicated that Tribe should have a right to appeal the decision of the Director of OSG to not award a planning or negotiation grant for a non-BIA program. Subpart D does not provide for an appeals process because the decision to award a grant will be made using selection criteria with associated points established by this rule. Those criteria and the point system were agreed to by the Committee. A comment indicated that the Director of OSG should seek and consider the comments on grant applications by the affected non-BIA bureau. The Committee found that this was not a regulatory matter.

*Subpart E—Annual Funding Agreements for Bureau of Indian Affairs Programs*

Summary of Subpart

This subpart describes the components of an Annual Funding Agreement (AFA) for BIA programs. An AFA is a legally binding and mutually enforceable written agreement between a self-governance Tribe/Consortium and BIA. It specifies the programs that are to be performed by BIA as inherently Federal functions identified as residuals, programs transferred to the Tribe/Consortium, and programs retained by BIA to be carried out for the self-governance Tribe. The division of the responsibilities between the Tribe/Consortium and BIA is to be clearly stated in the AFA.

Subpart E states that a Tribe/Consortium may include BIA-administered programs in its AFA regardless of BIA agency or office that performs the program. The Secretary must provide to the Tribe/Consortium:

(a) Funds equal to what the Tribe/Consortium would have received under contracts and grants under Title I of Pub. L. 93–638 (25 U.S.C. 450);

(b) Any funds specifically or functionally related to providing services to the Tribe/Consortium by the Secretary; and

(c) Any funds that are otherwise available to Indian Tribes for which appropriations are made to other agencies other than the Department of the Interior and are administered by the Department of the Interior.

Except for construction or when a waiver of regulations is involved, a Tribe/Consortium may redesign a program without approval from BIA except when the redesign first requires a waiver of a Departmental regulation. Redesign does not entitle Tribes/Consortia to an increase in the negotiated funding amount.

In determining the funding amount to be included in an AFA, this subpart defines residual funds as those funds needed to carry out BIA residual functions should all Tribes assume programmatic responsibility. The residual level will be determined through a process that is consistent with the overall process used by BIA.

The subpart defines Tribal shares as the amount determined for that Tribe/Consortium from a particular program. Tribal share amounts may be determined by either:

(a) A formula that has a reasonable basis in the function or service performed by BIA office and is consistently applied to all Tribes served by the regional and agency offices; or

(b) On a Tribe-by-Tribe basis, such as awarded competitive grants or special project funding.

Funding amounts may be adjusted while the AFA is in effect in order to adjust for certain Congressional actions, correct a mistake, or if there is mutual agreement. During the year, a Tribe/Consortium may reallocate funds between programs, except construction programs (see §§ 1000.254 and 255 in Subpart K of this part), without Secretarial approval.

This subpart also defines base budgets as the amount of recurring funding identified in the annual budget of the President as adjusted by Congressional action. Base budgets are derived from:

(a) A Tribe/Consortium's Pub. L. 93–638 contract amounts;

(b) Negotiated amounts of agency, regional, and central office funding;

(c) Other recurring funding;

(d) Special projects, if applicable;

(e) Programmatic shortfall; and

(f) Any other general increases/decreases to Tribal priority allocations that might include pay, retirement, or other inflationary cost adjustments.

Base budgets do not include any non-recurring program funds, Congressional earmarks, or other funds specifically excluded by Congress or other recurring programs that are currently in Tribal priority applications (TPA) such as general assistance, housing improvement program (HIP), road maintenance and contract support.

Once base budgets are established, a Tribe/Consortium need not renegotiate these amounts unless it wants to. If the Tribe/Consortium wishes to renegotiate, it also would be required to renegotiate all funding included in the AFA on the same basis as all other Tribes.

Comments

Several comments indicated § 1000.82 implies that residuals are limited to inherently Federal functions. However, § 1000.94 makes it clear that BIA residual funds are those funds that are necessary to carry out BIA residual activities and that these residual activities are those that can only be performed by BIA employees and may include some functions that are not ''inherently Federal.'' Further, the Secretary must take into consideration the other statutory mandates, such as Section 406(a), in determining residuals.

Several comments recommended that the term ''annual funding agreement'' be changed to ''funding agreement'' throughout the regulation contending that these two terms are used interchangeably throughout the Act. This would also be consistent with § 1000.85 that allows Tribes/Consortia to negotiate an AFA with a term that exceeds one year in accordance with Section 105(c)(1) of Title I of Pub. L. 93–638 and subject to the availability of Congressional appropriations. The decision was made to retain the term ''annual funding agreement'' in these regulations because the Act is clear that the Secretary is authorized to negotiate ''annual funding agreements''. Even though § 1000.85 allows Tribes to negotiate an AFA that exceeds one year, this only applies to BIA programs,

services, functions or activities. Moreover, most appropriations for non-BIA bureaus are annual in nature and do not permit multi-year terms in advance of appropriations.

Several comments expressed concerns about the effect of the proposed regulations on the Indian Reservation Road (IRR) program that is jointly administered by the Departments of Transportation and Interior. Following the publication of the proposed rule on February 12, 1998, the Transportation Equity Act for the 21st Century was enacted on June 9, 1998. This Act, known as TEA–21, made a number of changes to the Federal lands highway program, that includes IRR activities. Some of the comments received regarding the IRR program will be the subject of the separate Tribal-Federal negotiated rulemaking process established under TEA–21 (23 U.S.C. sec. 202(d)(2)(C)).

TEA–21 specifically makes funds for Indian roads and bridges available to Indian Tribes for Title I contracts and Title IV agreements in accordance with the Indian Self-Determination and Education Assistance Act of 1975, as amended. The pertinent provision reads as follows:

(3) CONTRACTS AND AGREEMENTS WITH INDIAN TRIBES.—

(A) IN GENERAL.—Notwithstanding any other provision of law or any interagency agreement, program guideline, manual or policy directive, all funds made available under this title for Indian reservation roads and for highway bridges located on Indian reservation roads to pay for the costs of programs, services, functions and activities or portions thereof, that are specifically or functionally related to the cost of planning, research, engineering and construction of any highway, road, bridge, parkway, or transit facility that provides access to or is located within the reservation or community of an Indian Tribes shall be made available upon request of the Indian Tribal government, to the Indian Tribal government for contracts and agreements for such planning, research, engineering, and construction in accordance with the Indian Self-Determination and Education Assistance Act.

Pub. L. 105–178, sec. 1115(b)(4)(3)(A)

Accordingly, the Committee believes that the TEA–21 statute and these final regulations provide the mechanism for including IRR programs, functions, services and activities or portions thereof in Self-Governance agreements subject to § 1000.93 that defers to the requirements of funding agencies other than the Department of the Interior.

Several comments recommended that the regulations be specific that inherently Federal functions can not be transferred and be more specific about what can be included in an AFA. The Committee believes that what can be included in an AFA is adequately covered in § 1000.86. Further, § 1000.94 discusses residual and § 1000.95 discusses how residual information is determined. Several comments recommended that inherently Federal functions should be defined and included in the definition part of the regulation. The Solicitor has ruled that inherently Federal functions cannot be defined and must be determined on a case-by-case basis; consequently, this suggestion was not accepted.

In § 1000.92, the words ''associated with programs'' were added to the answer, following the word ''funds'', for clarity.

Sections 1000.91 and 1000.97 deal with negotiated and Tribal share amounts of central office operations. Many comments were received supporting the retention of central office shares in these sections, even though there has been a prohibition in the Department of the Interior and Related Agencies Appropriations Acts for the past three years. Several comments argued that Title IV of Pub. L. 93–638 is clear that Tribes have a right to negotiated shares of the central office and that the legislative prohibition is only an annual prohibition. Several commentaries emphasized that the central office issue is related only to BIA and that for non-BIA programs, any funds transferred to a self-governance Tribe should be those that the Department would have spent, either directly or indirectly, for the benefit of those Tribes.

The Committee agreed to retain central office in §§ 1000.91 and 1000.97. Should the Congressional prohibition be lifted, then BIA would be willing to negotiate a portion of central office operations that are not a part of BIA residual or inherently Federal responsibilities and can be shown to be specifically and functionally related to the responsibilities being assumed by a self-governance Tribe.

Section 1000.94 has been rewritten by deleting specific reference to inherently Federal functions and to indicate that residual functions are those functions that can only be performed by BIA employees. The reason for deleting the reference to inherently Federal functions is that there could be some functions that are not inherently Federal in nature but that still must be performed by a BIA employee. An example would be a function that could be performed by Tribe but because of the indivisibility (e.g. one forester serving four Tribes) the function would remain a residual function.

Section 1000.95 has been rewritten to focus on the residual information that will be made available to Tribes. This section also identifies the overall process that BIA will follow and the general principles that will be used in determining and providing the residual information to Tribes. Also included are procedures to have the Deputy Commissioner reconsider residual levels for particular programs, and procedures to appeal the Deputy Commissioner's determination to the Assistant Secretary-Indian Affairs. A comment recommended that the Assistant Secretary—Indian Affairs provide a written determination on a Tribe's appeal within 30 days of receiving it and this suggestion was accepted. Another comment suggested changes to Section 1000.95 to specify active tribal involvement in the determination of residuals. This suggestion was not accepted but a new subsection, (c)(9) was added to § 1000.4 that indicates that Executive Order 13084 on Consultation and Coordination with Indian Tribal governments will be applied in the implementation of these regulations.

Regarding § 1000.95, the Tribal team raised the issue that when BIA is determining residuals for a particular function, service, or activity, that consideration should be made without regard to the organizational level at which the functions are being performed. It is the intent of BIA in determining residuals to take into consideration those functions that the Secretary must retain to ensure that the Secretary's statutory and trust obligations are met. In making this determination, BIA will first look to the appropriate organization level at which the service is being provided which may be the agency, regional or central office when appropriate. Depending upon where the service is being provided, the residual determination will be made.

Section 1000.96 was modified by removing reference to an ''annual list of residual activities'' to be consistent with the changes made in § 1000.95.

Another comment suggested that the term ''Tribal shares'' comply with the language of the Act. This suggestion was accepted by adding references to section 403(g)(3) and 405(d) of the Act to § 1000.97.

A comment identified confusion in § 1000.100. This has been corrected by replacing the word ''by'' with the word ''to'' so that funds would be ''distributed to a Tribe'' not ''distributed by a Tribe''. Another comment suggested that allowing Tribes to take a share of a competitive grant program violates section 403(g) and section 406(a) of the Act. No change was made because this

rule allows for a competitive grant funds to be distributed on a formula basis unless prohibited by Congress. If there is no Congressional prohibition to distributing all or a portion of a competitive grant program by formula, then other Tribes would be eligible to receive funds on a formula basis, as well.

The suggestion to change Section 1000.103 to allow funds to be reallocated to any program that is administered by the Tribe/Consortium rather than any program that the Tribe/Consortium administers under the AFA was not accepted. Section 403(b)(5) of the Act requires that the annual funding agreement specify ''* * * the services to be provided, the functions to be performed and the responsibility of the tribe and the Secretary under the agreement.'' The Department believes that allowing reallocation to programs included in the annual funding agreement is consistent with the Act.

A comment suggested that the word ''between'' be changed to ''among'' in the answer of § 1000.104(a)(3) and this suggestion was accepted. Another comment suggested that the answer be changed to allow for more BIA discretion in distributing increases in an equitable manner. This suggestion was accepted by adding the word ''and Tribes'' after the word ''regions'' in (a)(3). A similar change was made to § 1000.109(a)(3). Another comment suggested that before any reduction in funds, that Tribes be notified in writing and agree to the reduction. No change was made since any reduction being addressed in this section will be a change that reflects Congressional appropriation. Further, § 1000.104 states that Tribes will be notified and that the Tribes will be given an opportunity to reconcile.

A comment recommended deleting contract support from base budgets and this suggestion was accepted. An item (c) was added to § 1000.105 to clarify that other recurring programs that are in TPA, such as general assistance, housing improvement program (HIP), road maintenance and contract support are not to be included in the base unless any of them should become eligible for base transfer for all Tribes. The reason for including item (c) is to make clear about what is excluded from base budgets. An additional comment recommended that item (c) not be included and this suggestion was not accepted. The four programs included in (c) either have a special method for distributing funds, such as contract support, or are based upon neediest of the needy. Further, (c) does indicate that Self-Governance tribes could have these four programs based transferred if such an option were made available to all tribes.

Several comments regarding §§ 1000.106 and 1000.107 objected to the language that requires a Tribe to negotiate all base budget funding in order to re-negotiate a specific line item contending that this is an incorrect interpretation of the Act. The Committee agreed to the wording in §§ 1000.106 and 1000.107 as the best way to handle the issue of re-negotiation of base amounts.

Another comment suggested that § 1000.109 needed to more thoroughly reflect BIA's intent and the amount of discretion it seeks to retain in allocating any general increases/decreases. No action was taken because the Committee believed that answer is clear enough regarding BIA's discretion for base budget adjustments.

Several comments noted that there is no statutory authority for the Secretary to suspend, withhold or delay payment under an annual funding agreement and such authority implies evaluation and oversight of Tribal actions. Even though such a provision is in Title I of the Act, it is absent in Title IV. Several other comments maintain that since annual funding agreements are legally binding and mutually enforceable written agreements that require some mechanism to withhold, delay, or suspend funds when there is a determination that the Tribe/Consortium has not substantially carried out the AFA. After discussion, the Committee agreed not to regulate this issue.

*Subpart F—Non-BIA Annual Self-Governance Compacts and Funding Agreements*

Summary of Subpart

This subpart describes program eligibility, funding for, and terms and conditions relating to, AFAs covering non-BIA programs. This subpart also establishes procedures for consultation with Tribes for preparation of an annual **Federal Register** listing of non-BIA programs that are eligible for negotiation by self-governance Tribes.

Sections 1000.122 through 1000.136 of this subpart contain rules on the eligibility of programs for inclusion in AFAs. Under the Tribal Self-Governance Act of 1994, non-BIA programs are eligible for negotiation and inclusion in AFAs based on either section 403(b)(2), (25 U.S.C. 485cc(b)(2)) (pertaining to programs available to Indians), or section 403(c), (25 U.S.C. 458cc(c) (pertaining to programs of special geographic, historical, or cultural significance to the participating Tribe/Consortium).

These provisions reflect the discretion afforded by the Act with respect to the terms of eligibility of non-BIA programs for inclusion in AFAs, as compared to agreements covering BIA programs. For instance, section 403(b)(2) authorizes a non-BIA bureau to negotiate terms that it may require in AFAs and section 403(b)(3) allows redesign and consolidation of non-BIA programs or reallocation of funds when the parties agree.

Sections 1000.137 through 1000.142 of this subpart describe how AFA funding is determined. Programs that would be eligible for self-determination contracts under Title I of the Indian Self-Determination and Education Assistance Act (ISDEA) (Pub. L. 93–638, as amended) are to be funded at the same level as required for self-determination contracts.

Programs that are only available because of a special geographic, historical, or cultural significance eligible under section 403(c) of the Act are not eligible for self-determination contracting. The regulations provide that such programs generally are to be funded at the level that would have been spent by the bureau to operate the program, plus provisions for allowable indirect costs. The latter are generally based on rates negotiated by the Department of the Interior Inspector General, or the Inspector General of another applicable Federal agency.

Comments

This subpart of the regulations was one of the most contentious both to the Committee and to the many who commented. The central focus of concerns expressed was the degree of discretion that should be accorded to the Secretary in entering into AFAs for non-BIA programs. While the Tribal team and representative comments from several Tribes and Tribal organizations supported limited discretion, the Federal team and representative comments from outside Federal bureaus and non-governmental organizations supported broad Secretarial discretion. In addition to the issue of Secretarial discretion, the comments discussed what could be included in an AFA for a non-BIA bureau and, specifically, the term ''otherwise available''; the degree to which a non-BIA bureau program could be redesigned for Tribal needs; the method of entering into successor agreements; the explanation of ''nexus'' as it applied to 403(c) programs; and the calculation of indirect costs for such programs. Despite the wide range of differing views and comments, the

Committee did come to agreement on most disputed issues. Because the views of the Tribal team and representative comments from the several Tribes and Tribal organizations and the views of the Federal team and the representative comments from outside Federal bureaus and non-governmental organizations can be aligned between ''Tribal'' and ''Federal'', they are addressed as such below.

The Tribal view of ''otherwise available'' as it pertains to the inclusion of programs into AFAs for non-BIA bureaus is to interpret this phrase as meaning *any* Federal program unless it is an inherently Federal function of the non-BIA bureau. According to the Tribal comments, Section 403(b)(2) was meant to extend the reach of Title I and to increase Tribal operation of non-BIA programs within the Department of the Interior. The Federal team, however, views ''otherwise available'' under Section 403(b)(2) as essentially a different way of describing those programs that are eligible for contracting under Pub. L. 93–638. The Federal comments stressed the view that it was never the intention of Congress to give Tribes or Tribal organizations authority over non-BIA, non-Indian programs—such programs are not merely Tribal in scope but, rather, national in scope. The term ''otherwise available,'' therefore, would simply extend the availability of those Indian programs ''otherwise available'' to Tribes for inclusion in AFAs with non-BIA bureaus. The Committee could not agree on this matter and the regulation, therefore, reflects the Federal view at §§ 1000.122 through 1000.136.

Tribal comments and Federal comments differed on the matter of whether non-BIA bureaus must negotiate and must contract with Tribes/Consortia on those programs that are not identified as ''programs for the benefit of Indians because of their status as Indians.'' Tribal comments refer to the Congressional goal of providing opportunities for Tribes to have the dominant role in administering those programs that benefit Indians. Therefore, Tribal comments noted that unless a program, function, service or activity is inherently Federal, the non-BIA bureau must negotiate and enter into an AFA with the Tribe/Consortium. The Federal comments stressed that it is within the discretion of the Secretary to enter into an AFA with a Tribe/Consortium for those programs that may *coincidentally* benefit Indians but that are national in scope and were not by definition ''programs for the benefit of Indians because of their status as Indians.'' The Committee did not agree on this matter and the regulation, therefore, reflects the Federal view at §§ 1000.122 through 1000.136.

Intertwined with the perceptions of Secretarial discretion and programs available for inclusion in AFAs with non-BIA bureaus is whether or not Tribes may reallocate program funds and otherwise redesign non-BIA programs to better suit Tribal needs. Tribal comments reflected their contention that the Tribal Self-Governance Act was meant to be inclusive and, therefore, Tribes should have broad authority to assume non-BIA programs and redesign them in a manner that best suits their needs. Federal comments continued to stress that Congress did not intend Tribes to assume the administration and operation of non-BIA, non-Indian programs unless specifically authorized by the Secretary. After much discussion in committee, it was decided that the Federal view on this matter prevail. Therefore, the regulations at §§ 1000.144–1000.145 reflect that the Tribe/Consortium may reallocate funds or otherwise redesign non-BIA programs if mutually agreed to by the non-BIA bureau and the Tribe/Consortium as reflected in an executed AFA.

With respect to successor agreements, Tribal comments noted that successor agreements should be ''more or less'' automatic. The difficulties in negotiating fine points of an AFA should have already been worked out and, therefore, the Tribal comments asked the Committee to more closely review the mechanisms for negotiating successor AFAs. The Federal concerns were that the regulations not give the impression that multi-year funding agreements were being negotiated—in violation of Federal appropriation laws. The Committee discussed this matter in some detail and agreed that the mechanism for negotiating successor AFAs would be the same as for initial AFAs; however, since the terms of such agreements had already been worked out previously, unless major changes were to be included in a successor agreement the process would be an expedited one. The negotiation process for successor agreements is now found in subpart G and reflects the Committee's agreement at §§ 1000.180–1000.182.

Both Tribal and Federal comments discussed the need to have more ''complete'' definitions of the geographical, historic, and cultural ''nexus'' that would be found in Section 403(c) non-BIA programs. With some modest revisions, the Committee agreed to more explanatory definitions that are reflected in the regulations at § 1000.126.

It was evident in reviewing Tribal and Federal comments that the notion of ''indirect costs'' is a confusing one. The Tribal comments indicated a confusion between ''Tribal shares'' and allowable indirect costs associated with the management and operation of a Federal program. In addition, the method of determining the rate of indirect costs was a matter of disagreement even among Tribal comments. The Federal comments noted a wariness of negotiating agreements that would require an indirect cost expense to the government that was above and beyond the funds that were available to expend. In committee it was clearly noted by the Federal team that the government was not opposed to giving Tribes/Consortia allowable indirect costs. However, the Federal team confessed confusion in determining how best to provide the Tribes/Consortia with all necessary funds to administer non-BIA programs and factor in a further indirect cost expense. The Committee agreed to allow the non-BIA bureaus and the Tribes/Consortia to negotiate the amount of indirect costs for one particular AFA that might be different from the established rate set by the Office of the Inspector General. Indeed, the non-BIA bureau and the Tribe are encouraged to negotiate fee-for-service alternatives that facilitate entering into an AFA. These agreements by the Committee are reflected in the regulations at §§ 1000.138–1000.142.

A suggestion was made to redraft Section 1000.145 to allow for the reallocation of funds in non-BIA annual funding agreements. This suggestion was accepted but modified to exclude construction projects.

*Subpart G—Negotiation Process for Annual Funding Agreements*

Summary of Subpart

This subpart establishes the process and time lines for a newly selected or participating Tribe/Consortium wishing to negotiate either an initial or a successor AFA with any DOI bureau. Under subpart G, the negotiation process consists of two phases, an information phase and a negotiation phase.

In the information phase, any Tribe/Consortium that has been admitted to the self-governance program or to the applicant pool may submit requests for information concerning programs they wish to administer under the Tribal Self-Governance Act of 1994. Although this phase is not mandatory, it is expected to facilitate successful

negotiations by providing for a timely exchange of information on the requested programs.

The negotiation phase establishes detailed time lines and procedures for conducting negotiations with Tribes that have been accepted into the self-governance program, identifying the responsibilities of the Tribe/Consortium and bureau representatives in the negotiation process, and for executing AFAs. The deadlines for the negotiation process were chosen by the Committee to reflect the availability of annual budget information and the time needed for the bureau and the Tribe/Consortium to reach an agreement and the requirement under the Tribal Self-Governance Act of 1994 that each AFA must be submitted for Congressional review at least 90 days before its proposed effective date.

This subpart also establishes, in §§ 1000.180 through 1000.182, rules for the negotiation process for successor AFAs. A successor agreement is a funding agreement negotiated with a particular bureau after an initial agreement with that bureau. The procedures for negotiating a successor agreement are the same as those for initial agreements. The Committee expects, however, that successor agreements will build upon the prior agreements and will result in an expedited and simplified negotiation process.

The model compact serves as an umbrella document to recognize the government-to-government relationship between the Tribe(s) and the Department. Self-governance Tribes may choose to execute a compact with the Secretary but are not required to do so in order to enter into AFAs with Departmental bureaus. A model self-governance compact is provided in Appendix A. The model compact is not the same as an AFA and is not intended to replace, duplicate or lessen the importance of the AFA. Section 1000.163 permits the parties to agree to additional terms and conditions for inclusion in compacts.

The Committee agreed that for BIA programs only, a Tribe/Consortium may elect to continue under the terms of its pre-regulation compact as long as those provisions are in compliance with other Federal laws and are consistent with these regulations. For BIA programs, a Tribe/Consortium may include any term that may be included in a contract under Title I (Pub. L. 93–638; 25 U.S.C. 450) in the model compact.

Comments

A comment noted that the wording of § 1000.162 could be interpreted to require that Tribes/Consortia enter model compacts before an AFA could be negotiated. The Committee has noted this possible interpretation and has provided, in § 1000.164, that the Tribe/Consortium, at its option, can enter into an AFA without first entering into a model compact.

The Committee did not agree that any term under Title I could be included in a non-BIA bureau AFA at the Tribe's/Consortium's option. The Tribal team advocated for this position; however, the Federal team did not agree and noted that Title I programs are identified as Indian programs' and, therefore, would not necessarily have any relevance to non-BIA bureau programs. In a related matter, the Committee agreed that for BIA programs the Tribe/Consortium may include any provision of Title I in the model compact. The regulations at § 1000.163 reflect this position.

Several comments noted that Tribes/Consortia should be able to negotiate Tribal-specific provisions in their compacts. The Committee agreed with this premise as long as there was mutual agreement between the Tribe/Consortium and the bureau. The regulations at § 1000.163 reflect this position.

Compacts have been entered into with a number of Tribes/Consortia without final regulations in place. Therefore, concern was raised that compacts negotiated before the promulgation of final regulations should be validated after final regulations are in place. The Committee agreed and included a process in § 1000.165 that would allow for validation of existing compacts and renegotiation procedures for those terms and conditions from prior compacts that might be inconsistent with the final regulations. Disputes that might arise from this process are further provided for in subpart R of this part. A comment suggested that Section 1000.165 be modified to allow compacts to remain in effect even if they are inconsistent with these regulations. This suggestion was not accepted because initially compacts were created to clarify the relation between the Department and the Tribes/Consortia during the period when there were no regulations and many of the earlier compacts did not receive a careful legal review by the Department.

Concerns were raised about information collection from Departmental bureaus for initial and successor AFAs. The Committee has provided a comprehensive listing of information protocols in § 1000.172 that should address these concerns. Similarly, concerns were raised about the lack of a dispute resolution process. The Committee has provided such processes under § 1000.172 that refers to subpart R (Appeals) of these regulations.

With respect to the negotiation process itself, comments were made that asked for guidance on the designation of negotiators for both the Tribe/Consortium and the bureau(s). The regulations clearly provide for the designation of such negotiators in § 1000.173 and § 1000.174. It is within the discretion of the Tribe/Consortium and the bureau(s) to name such representatives according to their own policies and procedures, however the Committee agreed that these representatives must be authorized to negotiate on behalf of their respective governments as noted at § 1000.175 of these regulations.

Some comments noted that there should be no distinction between BIA and non-BIA programs on the issue of successor AFAs. The Committee agreed and made no distinction between BIA and non-BIA in the procedures for negotiating successor AFAs.

The Committee agreed that dispute resolution should be referenced to subpart R of these regulations and that a waiver of fees under the Freedom of Information Act would be entertained under that Act's provisions.

*Subpart H—Limitation and/or Reduction of Services, Contracts, and Funds*

Summary of Subpart

This subpart describes the process used by the Secretary to determine whether the implementation of an AFA will cause a limitation or reduction in services, contracts or funds to any other Indian Tribe/Consortium or Tribal organization as prohibited by section 406(a) of Pub. L. 93–638 (25 U.S.C. 458ff(a)). Subpart H applies only to BIA programs and does not apply to the general public and non-Indians.

BIA may raise the issue of limitation and/or reduction of services, contracts, or funding to other Tribes from the beginning of the negotiation period until the end of the first year of implementation of the AFA. An adversely affected Tribe/Consortium may raise the issue of limitation or reduction of services, contracts, or funding during region-wide Tribal shares meetings before the first year of implementation, within the 90-day review period before the effective date of the AFA, and during the first year of implementation of the AFA. Claims not filed on time are barred.

A claim by either the Department or an adversely affected Tribe/Consortium or Tribal organization must be a written

notification that specifies the alleged limitation or reduction of services, contracts, or funding. If a limitation and/or reduction exists, then BIA must use shortfall funding, supplemental funding, or other available BIA resources to prevent the reduction during the existing AFA year. BIA may, in a subsequent AFA, adjust the funding to correct a finding of actual reduction in services, contracts, or funds for that subsequent year. All adjustments under this subpart must be mutually agreed to between BIA and the Tribe/Consortium.

Comments

Some comments questioned the applicability of this subpart only to BIA. The concern was that Tribes should have the right to protest limitations or reductions in services regardless of whether or not the program was managed by BIA or a non-BIA bureau. The Committee took great care to ascertain that Section 406(a) of the Act could only apply to BIA since non-BIA bureaus do not contemplate providing services to the entire Indian community that would necessitate any formal parceling of services, activities, and resources. The types of non-BIA programs for which Tribes/Consortia would contract under self-governance would be limited to those discretionary programs already being provided to the general community. Therefore, there would never be an instance of program limitation or reduction in services to another Tribe/Consortium since the Tribe/Consortium contracting with the non-BIA bureau would be merely stepping into the place of the Federal entity and continuing to provide the same services as always to the general community.

Another comment wondered whether or not individual Indians should have the right to protest a limitation or reduction in services. The Committee considered this concept; however, it was determined that the Tribal Self-Governance Act of 1994 applies to sovereign Tribal governments as an expression of government-to-government relations between the Federal entity and Indian Nations. The particular case of an individual Tribal member's personal concerns must be handled, then, by that Tribal member's government and is not the subject of regulation by the Federal entity. Therefore, no revisions were made to the regulations.

Another comment noted that the time-frame for raising the issue of limitation or reduction of services was inconsistent with the statute. However, the Committee determined that the time-frames were necessary to allow for efficient management of the program.

*Subpart I—Public Consultation Process*

Summary of Subpart

This subpart describes when public consultation is appropriate and the protocols that should be used in this process. The roles of the Tribe/Consortium and the bureau are outlined, including notification procedures and the commitment to share information concerning inquiries about AFAs.

Public consultation is used when required by law or when appropriate under bureau discretion. When the law requires a public consultation process, the bureau will include the Tribe/Consortium to the maximum extent possible. When a public consultation process is a matter of bureau discretion, the bureau and the Tribe/Consortium may develop guidelines for the conduct of public meetings.

When the bureau conducts a public meeting, it must notify the Tribe/Consortium and involve the Tribe/Consortium in as much of the conduct of the meeting as is practicable and allowed by law. When someone other than the bureau conducts a meeting to discuss a particular AFA and the bureau is invited to attend, the bureau will notify the Tribe/Consortium of the invitation and encourage the meeting sponsor to invite the Tribe/Consortium to participate.

The bureau and the Tribe/Consortium will exchange information about other inquiries relating to the AFA under negotiation from other affected or interested parties.

Comments

The Committee was asked to clarify when a Tribe/Consortium may work jointly with the bureau to establish public consultation guidelines. Clarifying edits were made. Also, a comment asked that corresponding requirements for bureau participation in establishing Tribal guidelines for Tribal public consultation procedures be included in the final regulation. The Committee rejected this comment, because the Tribes/Consortia are considered sovereign entities and the Department of the Interior has no authority, therefore, to dictate guidelines for their internal purposes.

*Subpart J—Waiver of Regulations*

Summary of Subpart

This subpart implements section 403(i)(2)(A) of the Tribal Self-Governance Act of 1994 (25 U.S.C. 458cc(i)(2)(A)). It authorizes the Secretary to waive all DOI regulations governing programs included in an AFA, as identified by the Tribe/Consortium.

Subpart J also provides time lines, explains how a Tribe/Consortium applies for a waiver, the basis for granting or denying a waiver request, the documentation requirements for a decision, and establishes a process for reconsideration of the Secretary's denial of a waiver request.

The basis for the Secretary's denial of a waiver request depends on whether the request is made for a BIA or non-BIA program. For a BIA program, denial of a requested waiver must be predicated on a prohibition of Federal law. For a non-BIA program, denial of a requested waiver must be predicated on a prohibition of Federal law, or inconsistency with the express provisions of the AFA. Examples of waivers prohibited by law are provided in the body of the regulation.

This subpart does not specify whether or not a granted waiver must be requested with subsequent funding agreements. Many of the waivers that are granted are on a one time basis or are waivers that are intended to continue unless there is a change in the law, Federal regulations or what the tribe wants to do. Section 1000.220 states that the parties should identify waived regulations in the AFA's and because the funding agreements are annual, both the tribes and the Federal government have an opportunity to determine whether or not the current waivers are still appropriate.

Comments

A comment asked that provisions be included for formal bureau comment on the advisability of granting a waiver request. The Committee rejected the comment, however, as it did not want to place additional administrative burdens on bureaus that may slow or impede action on waiver requests.

Another comment asked whether or not the waiver provisions of the regulation would be inconsistent with the Unfunded Mandates Act of 1995. The Committee found that the regulation imposed no unfunded mandates on Tribes.

A comment from the Department of Transportation expressed concern that waivers of Department of Transportation regulations be ''jointly reviewed'' by the Secretary of the Interior and the Secretary of Transportation. The Committee notes that the only regulations that may be waived by the Secretary of the Interior are Department of the Interior regulations.

Some comments proposed language that would limit the discretion of the

Secretary in granting waivers. The Committee agreed that the Act narrows the scope of Secretarial discretion and, therefore, the Committee would not be empowered to expand the scope of discretion beyond the limits already imposed by the statute.

Another comment proposed that waivers be disallowed only if prohibited by Federal law. The Committee agreed that this would be one of the factors to be considered in denying a waiver request. However, the Federal team allowed that a waiver request might *also* be denied if it was inconsistent with the express provisions of the AFA. This standard is included, therefore, in the final regulation.

A comment proposed that § 1000.226 be changed to deem a waiver request as being denied if a decision is not rendered by the Department within 60 days and this proposal was accepted.

A comment recommended that the regulations address appeals on the denial of a waiver request beyond the Secretary. The Committee rejected this comment, however, because it believes the regulations are clear that whenever all administrative appeals are exhausted, the Tribe/Consortium may avail itself of judicial review in a Federal District Court.

A comment noted that publication of approved waivers of regulations be published in the **Federal Register** to provide notice to Tribes/Consortia for prospective waiver requests. The Committee added language that would post approved waivers on the Office of Self-Governance web page and would additionally make such waivers available upon request from any Tribe/Consortium.

*Subpart K—Construction*

Summary of Subpart

Subpart K applies to all construction, both BIA and non-BIA. It is designed as a stand-alone subpart; that is, other subparts do not apply to construction agreements if they are inconsistent with the provisions in subpart K. The subpart specifies that construction program activities are subject to subpart K, such as design, construction management services, actual construction; and that are not, such as planning services, operation and maintenance activities, and certain construction programs that cost less than $100,000. The subpart specifies the roles and responsibilities of the Tribes and the Secretary in construction programs, including performance, changes, monitoring, inspections, and a special reassumption provision for construction. It addresses whether inclusion of a construction program in an AFA creates an agency relationship with self-governance Tribes.

Federal Acquisition Regulations provisions are specifically not incorporated into these regulations, however, they may be negotiated by the parties in the AFA. Also, construction AFAs must address applicable Federal laws, program statutes, and regulations. In addition to requirements for all AFAs referenced in subpart F, other special provisions are added for construction programs, including health and safety standards, brief progress reports, and suspension of work when appropriate. Building codes appropriate for the project must be used and the Federal agency must notify the Tribe when Federal standards are appropriate for any project.

Comments

Several comments expressed the view that all of the self-governance regulations should apply to all Title IV agreements, including construction. In the preamble to the proposed rule, the Federal team had recommended that several general sections of the rule should not apply to construction and that the construction subpart should be a stand-alone section. It was decided that the provisions of subpart K should take precedence over any other subpart provisions that are inconsistent with subpart K. A question and an answer were added to subpart K stating at § 1000.252, ''Do all provisions of other subparts apply to construction portions of AFAs? Yes, unless they are inconsistent with this subpart.''

Other issues raised in the preamble to the proposed rule are discussed separately below.

Several comments raised concerns about the effects that a withdrawal from a Consortium would have on AFAs concerning construction projects. The comments thereon involving Tribal withdrawals from Consortiums, the comments were adopted and new questions and answers were agreed upon as reflected in §§ 1000.35 and 1000.253.

A comment regarding § 1000.82 (now § 1000.84) did not require a change in the regulation because a Tribe could not properly adopt construction provisions of Title I of the Act out of context; i.e., it would be inconsistent with a properly drafted construction AFA to adopt the Model Contract, section 108 of the Act, which is inapplicable to construction in Title I.

With regard to comments on inherent Federal functions, residuals, and the Secretary's responsibility to ensure construction safety, a new question and an answer were added to the construction subpart to reserve a portion of project funds from the AFA so that the Secretary has the funds to carry out his statutory mandate of Title IV to ensure construction safety (see § 1000.256).

In response to comments in regarding BIA reallocation of funds in § 1000.100 (now § 1000.103), two new questions and answers were added to the final regulation, as §§ 1000.254 and 1000.255, discussing reallocation of funds.

A comment that recommended that Bureau of Land Management Cadastral Surveys in Alaska should be defined as being construction was not adopted because the regulations are sufficiently clear to provide guidance for cadastral surveys in AFAs.

Comments regarding proposed Title V to the Act involving the Indian Health Service were rejected as not relevant to Title IV.

A comment recommended that ''construction management services'' should be defined. The Committee agreed and a definition was added to the final regulation.

A comment that phrasing in Subpart K confuses the meaning of ''design'' as to whether it is included in construction or not was not adopted because the Committee believed that these two sections are clear on this subject.

A comment suggested that some activities described in § 1000.240(b) be deleted and not subject to Subpart K because they are more applicable to Subpart E. This suggestion was accepted and Section 1000.240(b)(1) was changed to make explicit what activities and functions are covered by Subpart K. In essence, those activities that are administrative in nature are not subject to Subpart K and those activities that are associated with the actual construction are subject to Subpart K. Another comment recommended that TEA–21 road construction funds derived from the Federal Highway Trust Fund and transferred to BIA should be exempt from Subpart K if the funds are for a tribe assuming the entire road construction program. This suggestion was not accepted. While some of the activities included in a road construction program can be regulated by Subpart E, the bulk of the activities involve specific road construction projects that should comply with Subpart K. Further the TEA–21 negotiated rule making effort currently underway assume that road construction projects included in a tribe's AFA need to comport to Subpart K.

Comments regarding the lack of clarity in § 1000.241 as to the meaning

of ''an agency relationship'' were accepted and this section was modified in the final regulation.

The Committee adopted a comment recommending that § 1000.244 should be changed to delete the 5-day notice to a Tribe before suspending work in a emergency.

The comment that § 1000.223(e) of the proposed rule should be made into a separate section was adopted and is now § 1000.244. A comment recommended that § 1000.244 be changed to limit suspension of construction to a condition of imminent jeopardy to public health and safety only and this suggestion was not accepted. Another comment recommended that a new section be inserted that would indicate that compensation costs due to a suspension would not be paid from construction costs. This suggestion was accepted in part. Section 1000.244 was modified to indicate that project funds will not be used to compensate for costs associated with a suspension of construction work that occurs through no fault of the Tribe/Consortium.

A comment was made concerning the last sentence of § 1000.246 concerning the Secretary's option of accepting commonly accepted industry construction standards. The comment noted that this issue may create a problem in Alaska where building permits are not required in much of the state and ''common standards'' could be none at all. This comment was not adopted since the language in the regulation regarding commonly accepted industry standards is permissive and this section does permit the Federal agency to provide Federal standards that are mandatory unless a Tribally proposed standard is consistent with or exceeds the Federal standard. Other comments were also rejected because the Committee believed that this section of the regulation is clear.

A comment recommending that § 1000.246 use the concept of ''scope of work'' was not adopted because ''project design'' is appropriate language for construction projects.

Comments relating to 23 U.S.C., such as for § 1000.249, did not require clarification because § 1000.243(b) requires compliance with applicable Federal laws and program statutes.

A recommendation to add the citation to the Contract Disputes Act referenced in § 1000.251 was adopted.

A comment that to comply with the Solicitor's July 9, 1997, memorandum entitled, ''Tribal Self-Governance Draft Regulations—Construction Safety'', that a provision should be added that if the requirements of § 1000.243 are not met in an AFA, that the AFA should not be entered into, was considered unnecessary because it is obvious that the Secretary cannot properly enter into an AFA for construction projects if the criteria of § 1000.243 are not complied with in the AFA proposed by a Tribe/Consortium.

A comment suggested that § 1000.256 be deleted because it allows the Secretary to retain funds to monitor health and safety standards and that the residual funds identified in §§ 1000.94 to 1000.96 addresses this issue. This suggestion was not accepted because the funds identified in § 1000.256 are to cover the Secretary's necessary costs associated with specific construction projects. If the Secretary were not allowed to retain such costs from the specific project funds, then a higher than needed residual would be required at regional offices to accommodate for construction projects if and when they should be funded.

*Subpart L—Federal Tort Claims*

Summary of Subpart

This subpart explains the applicability of the Federal Tort Claims Act (FTCA).

Comments

A recommendation was made to incorporate FTCA rules from Title I. This suggestion was accepted and the appropriate Title I rules dealing with FTCA have been incorporated and modified slightly for Self-Governance. Sections 1000.270 to 100.286 replaced §§ 1000.240 to 1000.255 of the proposed rule.

*Subpart M—Reassumption*

Summary of Subpart

Reassumption is the Federally initiated action of reassuming control of Federal programs formerly performed by a Tribe. Subpart M explains the types of reassumption authorized under the Tribal Self-Governance Act of 1994, including the rights of a Consortium member, the types of circumstances necessitating reassumption, and Secretarial responsibilities including prior notice requirements and other procedures.

Subpart M also describes activities to be performed after reassumption has been completed, such as authorization for ''windup'' costs, Tribal obligations regarding the return of Federal property to the Secretary, and the effect of reassumption on other provisions of an AFA.

Comments

A comment recommended that language regarding those funds impacted by the notice of reassumption be more specific to the management of trust assets, resources, or the public health and safety. The Committee agreed. Other comments recommended editorial changes in the wording that were also agreed to by the Committee.

*Subpart N—Retrocession*

Summary of Subpart

Retrocession is the Tribally initiated action of returning control of certain programs to the Federal government. Subpart N defines retrocession, including how Tribes may retrocede, the effect of retrocession on future AFA negotiations, and Tribal obligations regarding the return of Federal property to the Secretary after retrocession.

Comments

A comment on this subpart recommended that the term ''contractor status'' be changed to read ''contract status''. The Committee agreed and the phrase was changed.

*Subpart O—Trust Evaluation Review*

Summary of Subpart

Subpart O establishes a procedural framework for the annual trust evaluation mandated by the Tribal Self-Governance Act of 1994. The purpose of the annual trust evaluation is to ensure that trust functions assumed by Tribes/Consortia are performed in a manner that does not place trust assets in imminent jeopardy.

Imminent jeopardy of a physical trust asset or natural resource (or their intended benefits) exists where there is an immediate threat and likelihood of significant devaluation, degradation, or loss to such asset. Imminent jeopardy to public health and safety means an immediate and significant threat of serious harm to human well-being, including conditions that may result in serious injury, or death, caused by Tribal action or inaction or as otherwise provided in an annual funding agreement.

Subpart O requires the Secretary's designated representative to prepare a written report for each AFA under which trust functions are performed by a Tribe. The regulation also authorizes a review of Federal performance of residual and nondelegble trust functions affecting trust resources.

Comments

Several comments were received on this subpart. A few dealt with editorial changes that the Committee agreed to

including: capitalizing ''Federal'' and ''Tribal'' throughout the regulation; striking a reference to the Code of Federal Regulations deemed to be unnecessary; and clarifying that the provisions of the AFA to be reviewed are the *trust* provisions. A comment recommended the addition of a question and answer that would address negotiating standards for review for purposes of the trust evaluation. The Committee agreed on the language to be used and that the question and answer should be added. A comment dealt with amending the section establishing standards to be used in the review of the Secretary's residual trust functions. The Committee agreed to add language that would articulate the criteria to be used in reviewing the Secretary's residual trust functions. A comment dealt with the need for clarification of the responsibilities of Consortia when a trust evaluation reveals problems in the performance of trust functions that do not rise to imminent jeopardy. The Committee agreed on clarifying language. A comment was concerned with establishing more Federal participation in assuring no breach of trust when a Tribe is operating a trust program and corrective action is necessary. The Committee agreed to language that clarified these responsibilities.

*Subpart P—Reports*

Summary of Subpart

This subpart describes the report on self-governance that the Secretary prepares annually for transmittal to Congress. It includes the requirements for the annual report that Tribes submit to the Secretary.

Comments

Comments noted that a Government Performance and Results Act (GPRA)-type reporting requirement should be applied to the Tribes and the bureaus as this would help justify more programs and services to Tribes/Consortia. While the Committee noted the merits of oversight and justification of further funding, it recognized that GPRA is a separate activity apart from self-governance. Further, there was no authority under the statute to mandate GPRA in this regulation. One comment suggested that the reporting requirement be made discretionary on the part of the tribes and this suggestion was accepted because there is no statutory basis requiring Tribes/Consortia to submit an annual report.

*Subpart Q—Miscellaneous Provisions*

Summary of Subpart

This subpart addresses many facets of self-governance not covered in the other subparts. Issues covered include the applicability of various laws and OMB circulars, how funds are handled in various situations, and the relationship between employees of the Tribe/Consortium and employees of the Federal government. Conflicts of Interest was moved to become Subpart S. For comments on Conflicts of Interest, see subpart S.

Comments

The committee agreed to delete § 1000.356 from the proposed rule which dealt with how payments will be made to self-governance Tribes/Consortia.

A suggestion was made to delete the requirement that tribe/consortium maintain minimum management standards that existed when the Tribe/Consortium first entered the Self-Governance program. This suggestion was not accepted. As an alternative § 1000.396 has been changed so that it is similar to what appears in the Title I regulations (§ 900.40)

Cash Management

It was suggested that § 1000.397, which addresses restrictions on the use of funds under the AFA, be deleted because it restricts the Tribe's/Consortium's ability to adopt programs and focus funds on local needs. This suggestion was not accepted. Section 403(b)(5) of the Act requires that the annual funding agreement specify ''* * * the services to be provided, the functions to be performed and the responsibility of the tribe and the Secretary under the agreement.'' It is critical that the regulations reflect the general parameters for use of funds transferred under AFA's.

As to cash management, there was considerable discussion on the investment of funds transferred to the Tribe/Consortium under an AFA. In comment and committee, the overwhelming Tribal view was that the Tribe/Consortium should be allowed to invest any funds transferred to them under an AFA according to the prudent investor standard. It was stressed that such investments would allow the Tribes/Consortia to increase their cash holdings and, hence, allow for greater achievement in the management of their programs under Tribal Self-Governance. While the Federal team could agree that investment—when it paid off—was a good way to enhance cash reserves, the Federal team and comments from agencies other than DOI questioned the propriety of investing Federal funds in other than secured vehicles. The chance to lose Federal funds seemed to be inapposite to the goals of self-governance. After consultation with the Office of the Solicitor, it was decided by the Federal team to allow limited investment in secured transactions. This decision is reflected in the regulations at § 1000.398.

Property Donation

Several comments were received regarding this subpart. The issues centered around the procedures and obligation of the Department to transfer BIA and non-BIA property to Tribes for use under an AFA. Much of the Committee's discussion concerned the applicability of 105(f)(2)(A) of Pub. L. 93–638 to non-BIA bureaus. After consideration, the Committee concluded that it would not regulate this section. Instead, Tribes and the Department will be required to follow already existing statutes, regulations and guidance issued by the Federal government.

Supply Sources

Several comments were received supporting the Tribal proposal for language regarding supply sources. The Committee recognizes that Tribes have had difficulties with the General Services Administration (GSA). However, only the GSA has the legal authority over a Tribe's/Consortium's use of Federal supply sources. To assist Tribes in exercising their options with regard to Federal supply sources, the Committee agreed that the Department should help facilitate discussions between the GSA and a Tribe/Consortium. Therefore, the Committee agreed to accept the Tribal language with a modification to the last sentence. The last sentence to § 1000.408 now reads: While implementation of this provision is the responsibility of the General Services Administration, the Department shall assist the Tribes/Consortia to resolve any barriers to full implementation that may arise to the fullest extent possible.

*Subpart R—Appeals*

Summary of Subpart

Subpart R prescribes the process Tribes/Consortia may use to resolve disputes with the Department arising before or after execution of an AFA or compact and certain other disputes related to self-governance. This subpart also describes the administrative process for reviewing disputes related to compact provisions. This subpart describes the process for administrative

appeals to: (1) the Interior Board of Indian Appeals; (2) the Interior Board of Contract Appeals; (3) the Assistant Secretary for the bureau responsible for certain disputed decisions; (4) the Secretary for reconsideration of decisions involving self-governance compacts, and; (5) the bureau head for certain pre-award disputes.

Subpart R indicates those decisions that are *not* administratively appealable under this subpart and makes provisions for informal conferences to settle disputes before filing an appeal. Pre-award disputes of Title I-eligible programs, functions, services and activities may only be filed with the Interior Board of Indian Appeals under the regulations promulgated in 25 CFR 900.150(a)–(h), 900.152–169. Other pre-award disputes of non-Title I-eligible programs, functions, services, and activities may be appealed through the administrative route within the Department or directly to the Interior Board of Indian Appeals. With the exception of certain decisions concerning reassumption for imminent jeopardy, the Tribe/Consortium may appeal post-award administrative decisions to the Interior Board of Contract Appeals.

Subpart R does *not* provide an appeals process for disputes arising from construction AFAs, as these procedures are found in subpart K of these regulations.

Comments

Comments on this subpart asked the Committee to simplify the appeals process and otherwise refrain from unnecessary cross-referencing that only confuses the reader of the regulations. The Committee arranged the appeals subpart to clearly indicate areas of dispute resolution including informal conferences, administrative resolution of both pre-award and post-award disputes, and matters that were not administratively appealable under this subpart.

A comment indicated that Tribes/Consortia should be able to go to the Interior Board of Indian Appeals for reassumption for imminent jeopardy. The Committee agreed that the Tribe/Consortium may go to the Interior Board of Indian Appeals for Title 1-eligible programs; however, non-Title I-eligible programs would go before the Interior Board of Contract Appeals. The Committee agreed that a Tribe/Consortium may choose to appeal directly to the Interior Board of Indian Appeals on an ''abuse of discretion'' standard. The Tribal team had advocated that this standard be further qualified ''as governed by the applicable canons of construction and the mandates of Section 403(i)(1).'' However, the Federal team did not agree with this further qualification of the abuse of discretion of standard because it felt that canons of construction was a term of art during litigation and was inappropriate as a regulatory parameter. The regulations, therefore, do not refer to canons of construction.

There was some discussion of whether the appropriate assistant secretary or the bureau head should be the final arbitrator of administrative appeals. The Committee recognized that conflicts could arise where it would be inappropriate for the bureau to decide an appeal. Therefore, the regulations provide that the bureau head would be the first line of appeal, unless the decision being appealed was the decision of the bureau head in which case the appeal would go to the appropriate assistant secretary. If the Tribe/Consortium does not receive a favorable decision from the bureau head, the appeal is automatically sent forward to the appropriate assistant secretary for final decision.

*Subpart S—Conflicts of Interest*

Summary of Subpart

The conflict of interest regulation subpart applies only if the AFA fails to provide equivalent protection against conflict of interests to these regulations. Section 1000.460 defines an organizational conflict of interest and addresses only those conflicts discovered after an AFA is signed. Section 1000.463 defines personal conflicts of interest and requires a Tribe/Consortium to have a Tribally-approved mechanism to ensure that no officer, employee, or agent of the Tribe/Consortium has a financial or employment interest that conflicts with that of the trust beneficiary.

Comments

Several comments were received supporting the proposed Tribal position or questioning the need for a section on conflicts of interest. Ultimately, the Department must balance the Federal-Tribal government-to-government relationship with the Federal trust responsibilities. In recognition of this responsibility, and in an attempt to minimize any intrusion or burden on Tribes/Consortia, the Committee agreed to adopt the Federal regulations published in Pub. L. 93–638 (25 U.S.C. 450).

Comments suggested that it was improper to subject a Tribe/Consortium to conflicts of interest provisions and not impose similar regulations on Federal employees. Federal employees are subject to conflicts of interest standards under 5 CFR 2635.

Some comments objected to the Federal proposal because they were inconsistent with the Federal policy on self-governance. While there is a strong Federal policy of self-governance, it does not diminish the Federal government's trust responsibility. The standards adopted with this regulation balance the Federal government's trust responsibilities with the policy of self-governance. The organizational conflicts of interest apply only if the AFA affects the interests of allottees, trust resources or statutory obligations to a third party. The personal conflicts of interest regulations only apply to trust programs. These provisions would only apply in the absence of a Tribal code or AFA provision that adequately protects trust beneficiaries from conflicts of interest. The rule also acknowledges that Tribal codes and negotiated AFA provisions, that are agreed to by the Department, are the preferred manner to address conflicts of interest. A proposal was made to replace §§ 1000.462–.464 with a single question and answer that allows the Tribe/Consortium to have some procedure in place that will avoid as is practicable possible conflicts of interest. This suggestion was not accepted even though the Department acknowledges that such regulations may be difficult for some smaller tribes to implement. However, the Department must ensure that there is no conflict of interest when a Tribe/Consortium manages trust programs so that the Secretary's trust responsibility is not compromised.

**Review Under Executive Order 12612**

The Department has determined that this rule does not have significant Federalism effects because it pertains solely to Federal-Tribal relations and will not interfere with the roles, rights, and responsibilities of States.

**Review Under Executive Order 12630**

The Department has determined that this rule does not have significant ''takings'' implications. The rule does not pertain to ''takings'' of private property interests, nor does it impact private property.

**Review Under Executive Order 12866**

Under Executive Order 12866 (58 FR 51735, October 4, 1993), BIA must determine whether the regulatory action is ''significant'' and therefore subject to OMB review and the requirements of the Executive Order. The Order defines ''significant regulatory action'' as one that is likely to result in a rule that may:

(1) Have an annual effect on the economy of $100 million or more or adversely affect in a material way the economy, a sector of the economy, productivity, competition, jobs, the environment, public health or safety, or State, local or tribal governments or communities;

(2) Create a serious inconsistency or otherwise interfere with an action taken or planned by another agency;

(3) Materially alter the budgetary impact of entitlements, grants, user fees, or loan programs or the rights and obligations or recipients thereof; or

(4) Raise novel legal or policy issues arising out of legal mandates, the President's priorities, or the principles set forth in the Executive Order.

The rule describes the process and procedures for negotiating annual funding agreements with Indian Tribes/consortia. Thus, the impact of the rule is confined to the federal government and the Indian trust beneficiaries and does not impose a compliance burden on the economy generally. No new monies are introduced into the stream of commerce with this rulemaking. Accordingly, it has been determined that this rule is not a ''significant regulatory action'' from an economic standpoint, or otherwise creates any inconsistencies or budgetary impacts to any other agency or federal program. However, the Department submitted the rule for review by the Office of Management and Budget (OMB) as a significant policy matter impacting federally-recognized tribes/consortia that participate in the Tribal Self-Governance Program administered by BIA.

**Review Under Executive Order 12988**

With respect to the review of existing regulations and the promulgation of new regulations, section 3(a) of Executive Order 12988, ''Civil Justice Reform,'' 61 FR 4729 (February 7, 1996), imposes on Executive agencies the general duty to adhere to the following requirements: (1) Eliminate drafting errors and ambiguity; (2) write regulations to minimize litigation; and (3) provide a clear legal standard for affected conduct rather than a general standard and promote simplification and burden reduction. With regard to the review required by section 3(a), section (b) of Executive Order 12988 specifically requires that Executive agencies make every reasonable effort to ensure that the regulation: (1) Clearly specifies the preemptive effect, if any; (2) clearly specifies any effect on existing federal law or regulation; (3) provides a clear legal standard for affected conduct while promoting simplification and burden reduction; (4) specifies the retroactive effect, if any; (5) adequately defines key terms; and (6) addresses other important issues affecting clarity and general draftsmanship under guidelines issues by the Attorney General. Section 3(c) of Executive Order 12988 requires Executive agencies to review regulations in light of applicable standards in section 3(a) and section 3(b) to determine whether they are met or it is unreasonable to meet one or more of them. The Department of the Interior has determined that, to the extent permitted by law, the final rule meets the relevant standards of Executive Order 12988.

**Review Under the Regulatory Flexibility Act**

This rule was reviewed under the Regulatory Flexibility Act, 5 U.S.C. 601 *et seq.*, which requires preparation of a regulatory flexibility analysis for any rule which is likely to have significant economic impact on a substantial number of small entities. This rule establishes the process and procedures for negotiating annual funding agreements with Indian Tribes/consortia. Indian tribes are not small entities under the Regulatory Flexibility Act. Accordingly, the Department of the Interior has determined that this proposed regulation will not have a significant economic impact on a substantial number of small entities, and, therefore, no regulatory flexibility analysis has been prepared.

**Review Under the Small Business Regulatory Enforcement Fairness Act of 1996 (SBREFA)**

This final rule is not a major rule as defined by section 804 of the Small Business Regulatory Enforcement Fairness Act of 1996. This proposed rule will not result in an annual effect on the economy of $100 million or more. The rule establishes the process and procedures for negotiating annual funding agreements with Indian Tribes/consortia and no new monies are being introduced into the stream of commerce. The final rule will not result in a major increase in costs or prices. The effect of this final rule will be to ensure consistent administration of the Tribal Self-Governance Program. No increases in costs for administration will be realized and no prices would be impacted through this administrative rulemaking. The final rule will not result in any significant adverse effects on competition, employment, investment, productivity, innovation, or on the ability of the United States-based companies to compete with foreign-based companies in domestic and export markets. The impact of the final rule will be realized by Indian Tribes/Consortia, and the administrative process and procedures promulgated in the final rule will not otherwise have a significant impact on any small businesses or enterprises.

**Review Under Executive Order 13132—Federalism**

The final rule will not have substantial direct effects on the States, on the relationship between the national government and the States, or on the distribution of power and responsibilities among the various levels of government. While this final rule will impact tribal governments, there is no Federalism impact on the trust relationship or balance of power between the United States government and the various Indian Tribes/consortia affected by this rulemaking. Therefore, in accordance with Executive Order 13132, it is determined that this rule will not have sufficient Federalism implications to warrant the preparation of a Federalism Assessment.

**Review Under the Unfunded Mandates Reform Act of 1995**

Title II of the Unfunded Mandates Reform Act of 1995, Public Law 104–4, establishes requirements for federal agencies to assess the effects of their regulatory actions on state, local, and tribal governments and the private sector. Under section 202 of the Act, the Department generally must prepare a written statement, including a cost-benefit analysis, for proposed and final rules with ''Federal mandates'' that may result in expenditures to state, local, and tribal governments, in the aggregate, or to the private sector, of $100 million or more in any one year. This final rule will not result in the expenditure by the state, local and tribal governments, in the aggregate, or by the private sector, of $100 million or more in any one year. The Department, however, determined that because the rulemaking will uniquely affect tribal governments it would follow Departmental and Administration protocols in consulting with tribal governments on the rulemaking. As this final rule was the result of a negotiated rulemaking process, with both a ''Tribal Team'' and a ''Federal Team,'' the Department asserts that appropriate consultation was achieved. Results of the ongoing negotiated rulemaking process were periodically reported and discussed in Federal/Tribal fora and these consultations met the mandates established by the President's Executive Order 13084, ''Consultation and

Coordination with Indian Tribal Governments.'' Tribal officials and the effected tribal constituency were given the opportunity for meaningful and timely input in the development of the final rule.

**NEPA Compliance**

The Department has determined that this rule does not constitute a major Federal action significantly affecting the quality of the human environment and that no detailed statement is required under the National Environmental Policy Act of 1969.

**Federal Paperwork Reduction Act**

In accordance with 44 U.S.C. 3507(d), OSG submitted the information collection and record keeping requirements of 25 CFR Part 1000 to the Office of Management and Budget (OMB) for review and approval. The OMB approved the self-governance information collection and assigned control number 1076–0143 to it.

25 CFR Part 1000

*Title:* Annual Funding Agreements Under the Tribal Self-Governance Act Amendments to the Indian Self-Determination and Education Act.

*OMB Control Number:* 1076–0143.

*Abstract:* The Department of the Interior and Indian government representatives negotiated a rule to implement section 407 of Pub. L. 103–413, the Tribal Self-Governance Act of 1994. As required by section 407 of the Act, the Secretary, upon request of a majority of the self-governance Tribes, initiated procedures under subchapter III of Chapter 5 of Title 5, U.S.C., to negotiate and promulgate regulations that are necessary to carry out title IV. This rule will allow the Department to negotiate annual funding agreements with self-governance Tribes for programs, services, functions and activities conducted by the Department. The Department developed this negotiated rulemaking with active Tribal participation, and it contains the proposed information collection.

*Need for and Use:* The information provided by the Tribes will be used by the Department of the Interior for a variety of purposes. The first purpose will be to ensure that qualified applicants are admitted into the applicant pool consistent with the requirements of the Act. In addition, Tribes seeking grant assistance to meet the planning requirements for admission into the applicant pool will provide information so that grants can be awarded to Tribes meeting basic eligibility (i.e. Tribal resolution indicating that the Tribe wants to plan for self-governance and has no material audit exceptions for the last three years). Other documentation is required to meet the reporting requirements as called for in Section 405 of the Act.

*Respondents:* Tribes and Tribal Consortia that may be affected by self-governance activities or request funding for projects or services.

*Total Annual Burden:* Refer to proposed 25 CFR 1000.3 for a detailed table of the burden estimates anticipated by this rulemaking.

*Comments were invited on:*

(a) Whether the proposed collection of information is necessary for the proper performance of the Department of the Interior, including whether the information will have practical utility;

(b) The accuracy of OSG's estimate of the burden of the proposed collection of information;

(c) Ways to enhance the quality, utility, and clarity of the information to be collected; and

(d) Ways to minimize the burden of collection on the respondents. No comments were received concerning the information collection requirements of this rule.

No comments were received on the information collection issues in the proposed regulation. Under the Paperwork Reduction Act, OSG must obtain OMB approval of all information and record keeping requirements. No person is required to respond to an information collection request unless the form or regulation requesting the information has a currently valid OMB control (clearance) number. This number appears in 25 CFR 1000.3. To obtain a copy of OSG's information collection clearance requests, explanatory information, and related form, contact the Information Collection Clearance Officer, Office of Self-Governance, at (202) 219–0240.

**List of Subjects in 25 CFR Part 1000**

Grant programs—Indians, Indians.

Dated: September 5, 2001.

**Bruce Babbitt,**

*Secretary of the Interior.*

For the reasons set out in the preamble, the Department of the Interior adds a new part 1000 in chapter VI of title 25 of the Code of Federal Regulations as set forth below.

## PART 1000—ANNUAL FUNDING AGREEMENTS UNDER THE TRIBAL SELF-GOVERNMENT ACT AMENDMENTS TO THE INDIAN SELF-DETERMINATION AND EDUCATION ACT

### Subpart A—General Provisions

Sec.
1000.1 Authority.
1000.2 Definitions.
1000.3 Purpose and scope.
1000.4 Policy statement.

### Subpart B—Selection of Additional Tribes for Participation in Tribal Self-Governance

**Purpose and Definitions**

1000.10 What is the purpose of this subpart?
1000.11 What is the ''applicant pool''?
1000.12 What is a ''signatory''?
1000.13 What is a ''nonsignatory Tribe''?

**Eligibility**

1000.14 Who is eligible to participate in Tribal self-governance?
1000.15 How many additional Tribes/Consortia may participate in self-governance per year?
1000.16 What criteria must a Tribe/Consortium satisfy to be eligible for admission to the ''applicant pool''?
1000.17 What documents must a Tribe/Consortium submit to OSG to apply for admission to the applicant pool?
1000.18 May a Consortium member Tribe withdraw from the Consortium and become a member of the applicant pool?
1000.19 What is done during the ''planning phase''?
1000.20 What is required in a planning report?
1000.21 When does a Tribe/Consortium have a ''material audit exception''?
1000.22 What are the consequences of having a material audit exception?

**Admission Into the Applicant Pool**

1000.23 How is a Tribe/Consortium admitted to the applicant pool?
1000.24 When does OSG accept applications to become a member of the applicant pool?
1000.25 What are the deadlines for a Tribe/Consortium in the applicant pool to negotiate a compact and annual funding agreement (AFA)?
1000.26 Under what circumstances will a Tribe/Consortium be removed from the applicant pool?
1000.27 How does the Director select which Tribes in the applicant pool become self-governance Tribes?
1000.28 What happens if an application is not complete?
1000.29 What happens if a Tribe/Consortium is selected from the applicant pool but does not execute a compact and an AFA during the calendar year?
1000.30 May a Tribe/Consortium be selected to negotiate an AFA under section 403(b)(2) without having or negotiating an AFA under section 403(b)(1)?
1000.31 May a Tribe/Consortium be selected to negotiate an AFA under section 403(c) without negotiating an AFA under section 403(b)(1) and/or section 403(b)(2)?

**Withdrawal From a Consortium Annual Funding Agreement**

1000.32 What happens when a Tribe wishes to withdraw from a Consortium annual funding agreement?

1000.33 What amount of funding is to be removed from the Consortium's AFA for the withdrawing Tribe?
1000.34 What happens if there is a dispute between the Consortium and the withdrawing Tribe?
1000.35 When a Tribe withdraws from a Consortium, is the Secretary required to award to the withdrawing Tribe a portion of funds associated with a construction project if the withdrawing Tribe so requests?

**Subpart C—Section 402(d) Planning and Negotiation Grants**

**Purpose and Types of Grants**

1000.40 What is the purpose of this subpart?
1000.41 What types of grants are available?

**Availability, Amount, and Number of Grants**

1000.42 Will grants always be made available to meet the planning phase requirement as described in section 402(d) of the Act?
1000.43 May a Tribe/Consortium use its own resources to meet its self-governance planning and negotiation expenses?
1000.44 What happens if there are insufficient funds to meet the Tribal requests for planning/negotiation grants in any given year?
1000.45 How many grants will the Department make each year and what funding will be available?

**Selection Criteria**

1000.46 Which Tribes/Consortia may be selected to receive a negotiation grant?
1000.47 What must a Tribe/Consortium do to receive a negotiation grant?
1000.48 What must a Tribe do if it does not wish to receive a negotiation grant?

**Advance Planning Grant Funding**

1000.49 Who can apply for an advance planning grant?
1000.50 What must a Tribe/Consortium seeking a planning grant submit in order to meet the planning phase requirements?
1000.51 How will Tribes/Consortia know when and how to apply for planning grants?
1000.52 What criteria will the Director use to award advance planning grants?
1000.53 Can Tribes/Consortia that receive advance planning grants also apply for a negotiation grant?
1000.54 How will a Tribe/Consortium know whether or not it has been selected to receive an advance planning grant?
1000.55 Can a Tribe/Consortium appeal within DOI the Director's decision not to award a grant under this subpart?

**Subpart D—Other Financial Assistance for Planning and Negotiations Grants for Non-BIA Programs**

**Purpose and Eligibility**

1000.60 What is the purpose of this subpart?
1000.61 Are other funds available to self-governance Tribes/Consortia for planning and negotiating with non-BIA bureaus?

**Eligibility and Application Process**

1000.62 Who can apply to OSG for grants to plan and negotiate non-BIA programs?
1000.63 Under what circumstances may planning and negotiation grants be awarded to Tribes/Consortia?
1000.64 How does the Tribe/Consortium, know when and how to apply to OSG for a planning and negotiation grant?
1000.65 What kinds of activities do planning and negotiation grants support?
1000.66 What must be included in the application?
1000.67 How will the Director award planning and negotiation grants?
1000.68 May non-BIA bureaus provide technical assistance to a Tribe/Consortium in drafting its planning grant application?
1000.69 How can a Tribe/Consortium obtain comments or selection documents received or utilized after OSG has made a decision on a planning grant application?
1000.70 What criteria will the Director use to rank the applications and how many maximum points can be awarded for each criterion?
1000.71 Can an applicant appeal a decision not to award a grant?
1000.72 Will OSG notify Tribes/Consortia and affected non-BIA bureaus of the results of the selection process?
1000.73 Once a Tribe/Consortium has been awarded a grant, may the Tribe/Consortium obtain information from a non-BIA bureau?

**Subpart E—Annual Funding Agreements for Bureau of Indian Affairs Programs**

1000.80 What is the purpose of this subpart?
1000.81 What is an annual funding agreement (AFA)?

**Contents and Scope of Annual Funding Agreements**

1000.82 What types of provisions must be included in a BIA AFA?
1000.83 Can additional provisions be included in an AFA?
1000.84 Does a Tribe/Consortium have the right to include provisions of Title I of Pub. L. 93–638 in an AFA?
1000.85 Can a Tribe/Consortium negotiate an AFA with a term that exceeds one year?

**Determining What Programs May Be Included in an AFA**

1000.86 What types of programs may be included in an AFA?
1000.87 How does the AFA specify the services provided, functions performed, and responsibilities assumed by the Tribe/Consortium and those retained by the Secretary?
1000.88 Do Tribes/Consortia need Secretarial approval to redesign BIA programs that the Tribe/Consortium administers under an AFA?
1000.89 Can the terms and conditions in an AFA be amended during the year it is in effect?
1000.90 What happens if an AFA expires before the effective date of the successor AFA?

**Determining AFA Amounts**

1000.91 What funds must be transferred to a Tribe/Consortium under an AFA?
1000.92 What funds may not be included in an AFA?
1000.93 May the Secretary place any requirements on programs and funds that are otherwise available to Tribes/Consortia or Indians for which appropriations are made to agencies other than DOI?
1000.94 What are BIA residual funds?
1000.95 How is BIA's residual determined?
1000.96 May a Tribe/Consortium continue to negotiate an AFA pending an appeal of residual functions and amounts?
1000.97 What is a Tribal share?
1000.98 How does BIA determine a Tribe's/Consortium's share of funds to be included in an AFA?
1000.99 Can a Tribe/Consortium negotiate a Tribal share for programs outside its region/agency?
1000.100 May a Tribe/Consortium obtain funding that is distributed on a discretionary or competitive basis?
1000.101 Are all funds identified as Tribal shares always paid to the Tribe/Consortium under an AFA?
1000.102 How are savings that result from downsizing allocated?
1000.103 Do Tribes/Consortia need Secretarial approval to reallocate funds between programs that the Tribe/Consortium administers under the AFA?
1000.104 Can funding amounts negotiated in an AFA be adjusted during the year it is in effect?

**Establishing Self-Governance Base Budgets**

1000.105 What are self-governance base budgets?
1000.106 Once a Tribe/Consortium establishes a base budget, are funding amounts renegotiated each year?
1000.107 Must a Tribe/Consortium with a base budget or base budget-eligible program amounts negotiated before January 16, 2001 negotiate new Tribal shares and residual amounts?
1000.108 How are self-governance base budgets established?
1000.109 How are self-governance base budgets adjusted?

**Subpart F—Non-BIA Annual Self-Governance Compacts and Funding Agreements**

**Purpose**

1000.120 What is the purpose of this subpart?
1000.121 What is an annual funding agreement for a non-BIA program?

**Eligibility**

1000.122 What non-BIA programs are eligible for inclusion in an AFA?
1000.123 Are there non-BIA programs for which the Secretary must negotiate for inclusion in an AFA subject to such terms as the parties may negotiate?
1000.124 What programs are included under section 403(b)(2) of the Act?

1000.125 What programs are included under section 403(c)?
1000.126 What does ''special geographic, historical or cultural'' mean?
1000.127 Under section 403(b)(2), when must programs be awarded non-competitively?
1000.128 Is there a contracting preference for programs of special geographic, historical, or cultural significance?
1000.129 Are there any programs that may not be included in an AFA?
1000.130 Does a Tribe/Consortium need to be identified in an authorizing statute in order for a program or element of a program to be included in a non-BIA AFA?
1000.131 Will Tribes/Consortia participate in the Secretary's determination of what is to be included on the annual list of available programs?
1000.132 How will the Secretary consult with Tribes/Consortia in developing the list of available programs?
1000.133 What else is on the list in addition to eligible programs?
1000.134 May a bureau negotiate with a Tribe/Consortium for programs not specifically included on the annual section 405(c) list?
1000.135 How will a bureau negotiate an annual funding agreement for a program of special geographic, historical, or cultural significance to more than one Tribe?
1000.136 When will this determination be made?

**Funding**

1000.137 What funds are included in an AFA?
1000.138 How are indirect cost rates determined?
1000.139 Will the established indirect cost rate always apply to new AFAs?
1000.140 How does the Secretary determine the amount of indirect contract support costs?
1000.141 Is there a predetermined cap or limit on indirect cost rates or a fixed formula for calculating indirect cost rates?
1000.142 Instead of the negotiated indirect cost rate, is it possible to establish a fixed amount or another negotiated rate for indirect costs where funds are limited?

**Other Terms and Conditions**

1000.143 May the bureaus negotiate terms to be included in an AFA for non-Indian programs?

**Reallocation, Duration and Amendments**

1000.144 Can a Tribe reallocate funds for a non-BIA non-Indian program?
1000.145 Do Tribes/Consortia need Secretarial approval to reallocate funds between Title-I eligible programs that the Tribe/Consortium administers under a non-BIA AFA?
1000.146 Can a Tribe/Consortium negotiate an AFA with a non-BIA bureau for which the performance period exceeds one year?
1000.147 Can the terms and conditions in a non-BIA AFA be amended during the year it is in effect?
1000.148 What happens if an AFA expires before the effective date of the successor AFA?

**Subpart G—Negotiation Process for Annual Funding Agreements**

**Purpose**

1000.160 What is the purpose of this subpart?

**Negotiating a Self-Governance Compact**

1000.161 What is a self-governance compact?
1000.162 What is included in a self-governance compact?
1000.163 Can a Tribe negotiate other terms and conditions not contained in the model compact?
1000.164 Can a Tribe/Consortium have an AFA without entering into a compact?
1000.165 Are provisions in compacts negotiated before January 16, 2001, effective after implementation?

**Negotiation of Initial Annual Funding Agreements**

1000.166 What are the phases of the negotiation process?
1000.167 Who may initiate the information phase?
1000.168 Is it mandatory to go through the information phase before initiating the negotiation phase?
1000.169 How does a Tribe/Consortium initiate the information phase?
1000.170 What is the letter of interest?
1000.171 When should a Tribe/Consortium submit a letter of interest?
1000.172 What steps does the bureau take after a letter of interest is submitted by a Tribe/Consortium?
1000.173 How does a newly selected Tribe/Consortium initiate the negotiation phase?
1000.174 How and when does the bureau respond to a request to negotiate?
1000.175 What is the process for conducting the negotiation phase?
1000.176 What issues must the bureau and the Tribe/Consortium address at negotiation meetings?
1000.177 What happens when the AFA is signed?
1000.178 When does the AFA become effective?
1000.179 What happens if the Tribe/Consortium and bureau negotiators fail to reach an agreement?

**Negotiation Process for Successor Annual Funding Agreements**

1000.180 What is a successor AFA?
1000.181 How does the Tribe/Consortium initiate the negotiation of a successor AFA?
1000.182 What is the process for negotiating a successor AFA?

**Subpart H—Limitation and/or Reduction of Services, Contracts, and Funds**

1000.190 What is the purpose of this subpart?
1000.191 To whom does this subpart apply?
1000.192 What services, contracts, or funds are protected under section 406(a)?
1000.193 Who may raise the issue of limitation or reduction of services, contracts, or funding?
1000.194 When must BIA raise the issue of limitation or reduction of services, contracts, or funding?
1000.195 When must an affected Tribe/Consortium or Tribal organization raise the issue of a limitation or reduction of services, contracts, or funding for which it is eligible?
1000.196 What must be included in a finding by BIA or in a claim by or an affected Tribe/Consortium or Tribal organization regarding the issue of a limitation or reduction of services?
1000.197 How will BIA resolve a claim?
1000.198 How must a limitation or reduction in services, contracts, or funds be remedied?

**Subpart I—Public Consultation Process**

1000.210 When does a non-BIA bureau use a public consultation process related to the negotiation of an AFA?
1000.211 Will the bureau contact the Tribe/Consortium before initiating public consultation process for a non-BIA AFA under negotiation?
1000.212 What is the role of the Tribe/Consortium when a bureau initiates a public meeting?
1000.213 What should the bureau do if it is invited to attend a meeting with respect to the Tribe's/Consortium's proposed AFA?
1000.214 Will the bureau and the Tribe/Consortium share information concerning inquiries about the Tribes/Consortia and the AFA?

**Subpart J—Waiver of Regulations**

1000.220 What regulations apply to self-governance Tribes?
1000.221 Can the Secretary grant a waiver of regulations to a Tribe/Consortium?
1000.222 How does a Tribe/Consortium obtain a waiver?
1000.223 When can a Tribe/Consortium request a waiver of a regulation?
1000.224 How can a Tribe/Consortium expedite the review of a regulation waiver request?
1000.225 Are meetings or discussions mandatory?
1000.226 On what basis may the Secretary deny a waiver request?
1000.227 What happens if the Secretary denies the waiver request?
1000.228 What are examples of waivers prohibited by law?
1000.229 May a Tribe/Consortium propose a substitute for a regulation it wishes to be waived?
1000.230 How is a waiver approval documented for the record?
1000.231 How does a Tribe/Consortium request a reconsideration of the Secretary's denial of a waiver?
1000.232 When must DOI respond to a request for reconsideration?

**Subpart K—Construction**

1000.240 What construction programs included in an AFA are subject to this subpart?
1000.241 Does this subpart create an agency relationship?
1000.242 What provisions relating to a construction program may be included in an AFA?
1000.243 What special provisions must be included in an AFA that contains a construction program?
1000.244 May the Secretary suspend construction activities under an AFA?
1000.245 May a Tribe/Consortium continue work with construction funds remaining in an AFA at the end of the funding year?
1000.246 Must an AFA that contains a construction project or activity incorporate provisions of Federal construction standards?
1000.247 May the Secretary require design provisions and other terms and conditions for construction programs or activities included in an AFA under section 403(c) of the Act?
1000.248 What is the Tribe's/Consortium's role in a construction program included in an AFA?
1000.249 What is the Secretary's role in a construction program in an AFA?
1000.250 How are property and funding returned if there is a reassumption for substantial failure to carry out an AFA?
1000.251 What happens when a Tribe/Consortium is suspended for substantial failure to carry out the terms of an AFA without good cause and does not correct the failure during the suspension?
1000.252 Do all provisions of other subparts apply to construction portions of AFAs?
1000.253 When a Tribe withdraws from a Consortium, is the Secretary required to award to the withdrawing Tribe a portion of funds associated with a construction project if the withdrawing Tribe so requests?
1000.254 May a Tribe/Consortium reallocate funds from a construction program to a non-construction program?
1000.255 May a Tribe/Consortium reallocate funds among construction programs?
1000.256 Must the Secretary retain project funds to ensure proper health and safety standards in construction projects?

**Subpart L—Federal Tort Claims**

1000.270 What does this subpart cover?
1000.271 What other statutes and regulations apply to FTCA coverage?
1000.272 Do Tribes/Consortia need to be aware of areas which FTCA does not cover?
1000.273 Is there a deadline for filing FTCA claims?
1000.274 How long does the Federal government have to process a FTCA claim after the claim is received by the Federal agency, before a lawsuit may be filed?
1000.275 Is it necessary for a self-governance AFA to include any clauses about FTCA coverage?
1000.276 Does FTCA apply to a self-governance AFA if FTCA is not referenced in the AFA?
1000.277 To what extent shall the Tribe/Consortium cooperate with the Federal government in connection with tort claims arising out of the Tribe's/Consortium's performance?
1000.278 Does this coverage extend to subcontractors of self-governance AFAs?
1000.279 Is FTCA the exclusive remedy for a tort claim, including a claim concerning personal injury or death, resulting from the performance of a self-governance AFA?
1000.280 What employees are covered by FTCA for medical-related claims?
1000.281 Does FTCA cover employees of the Tribe/Consortium who are paid by the Tribe/Consortium from funds other than those provided through the self-governance AFA?
1000.282 May persons who are not Indians or Alaska Natives assert claims under FTCA?
1000.283 If the Tribe/Consortium or the Tribe's/Consortium's employee receives a summons and/or complaint alleging a tort covered by FTCA, what should a Tribe/Consortium do?

**Subpart M—Reassumption**

1000.300 What is the purpose of this subpart?
1000.301 When may the Secretary reassume a Federal program operated by a Tribe/Consortium under an AFA?
1000.302 What is ''imminent jeopardy'' to a trust asset?
1000.303 What is imminent jeopardy to natural resources?
1000.304 What is imminent jeopardy to public health and safety?
1000.305 In an imminent jeopardy situation, what must the Secretary do?
1000.306 Must the Secretary always reassume a program, upon a finding of imminent jeopardy?
1000.307 What happens if the Secretary's designated representative determines that the Tribe/Consortium cannot mitigate the conditions within 60 days?
1000.308 What will the notice of reassumption include?
1000.309 How much time will a Tribe/Consortium have to respond to a notice of imminent jeopardy?
1000.310 What information must the Tribe's/Consortium's response contain?
1000.311 How will the Secretary reply to the Tribe's/Consortium's response?
1000.312 What happens if the Secretary accepts the Tribe's/Consortium's proposed measures?
1000.313 What happens if the Secretary does not accept the Tribe's/Consortium's proposed measures?
1000.314 What must a Tribe/Consortium do when a program is reassumed?
1000.315 When must the Tribe/Consortium return funds to the Department?
1000.316 May the Tribe/Consortium be reimbursed for actual and reasonable ''wind up costs'' incurred after the effective date of retrocession?
1000.317 Is a Tribe's/Consortium's general right to negotiate an AFA adversely affected by a reassumption action?
1000.318 When will the Secretary return management of a reassumed program?

**Subpart N—Retrocession**

1000.330 What is the purpose of this subpart?
1000.331 Is a decision by a Tribe/Consortium not to include a program in a successor agreement considered a retrocession?
1000.332 Who may retrocede a program in an AFA?
1000.333 How does a Tribe/Consortium retrocede a program?
1000.334 When will the retrocession become effective?
1000.335 How will retrocession affect the Tribe's/Consortium's existing and future AFAs?
1000.336 Does the Tribe/Consortium have to return funds used in the operation of a retroceded program?
1000.337 Does the Tribe/Consortium have to return property used in the operation of a retroceded program?
1000.338 What happens to a Tribe's/Consortium's mature contractor status if it has retroceded a program that is also available for self-determination contracting?
1000.339 How does retrocession affect a bureau's operation of the retroceded program?

**Subpart O—Trust Evaluation Review**

1000.350 What is the purpose of this subpart?
1000.351 Does the Tribal Self-Governance Act of 1994 alter the trust responsibility of the United States to Indian Tribes and individuals under self-governance?
1000.352 What are ''trust resources'' for the purposes of the trust evaluation process?
1000.353 What are ''trust functions'' for the purposes of the trust evaluation process?

**Annual Trust Evaluations**

1000.354 What is a trust evaluation?
1000.355 How are trust evaluations conducted?
1000.356 May the trust evaluation process be used for additional reviews?
1000.357 May the parties negotiate standards of review for purposes of the trust evaluation?
1000.358 Can an initial review of the status of the trust asset be conducted?
1000.359 What are the responsibilities of the Secretary's designated representative(s) after the annual trust evaluation?
1000.360 Is the trust evaluation standard or process different when the trust asset is held in trust for an individual Indian or Indian allottee?
1000.361 Will the annual review include a review of the Secretary's residual trust functions?
1000.362 What are the consequences of a finding of imminent jeopardy in the annual trust evaluation?
1000.363 What if the trust evaluation reveals problems that do not rise to the level of imminent jeopardy?

1000.364 Who is responsible for corrective action?
1000.365 What are the requirements of the review team report?
1000.366 Can the Department conduct more than one trust evaluation per Tribe per year?
1000.367 Will the Department evaluate a Tribe's/Consortium's performance of non-trust related programs?

**Subpart P—Reports**

1000.380 What is the purpose of this subpart?
1000.381 How is information about self-governance developed and reported?
1000.382 What may the Tribe's/Consortium's annual report on self-governance address?

**Subpart Q—Miscellaneous Provisions**

1000.390 How can a Tribe/Consortium hire a Federal employee to help implement an AFA?
1000.391 Can a Tribe/Consortium employee be detailed to a Federal service position?
1000.392 How does the Freedom of Information Act apply?
1000.393 How does the Privacy Act apply?
1000.394 What audit requirements must a self-governance Tribe/Consortium follow?
1000.395 Do OMB circulars and revisions apply to self-governance funding agreements?
1000.396 Does a Tribe/Consortium have additional ongoing requirements to maintain minimum standards for Tribe/Consortium management systems?
1000.397 Are there any restrictions on how AFA funds may be spent?
1000.398 May a Tribe/Consortium invest funds received under a self-governance agreement?
1000.399 How may interest or investment income that accrues on AFAs be used?
1000.400 Can a Tribe/Consortium retain savings from programs?
1000.401 Can a Tribe/Consortium carry over funds not spent during the term of the AFA?
1000.402 After a non-BIA AFA has been executed and the funds transferred to a Tribe/Consortium, can a bureau request the return of funds?
1000.403 How can a person or group appeal a decision or contest an action related to a program operated by a Tribe/Consortium under an AFA?
1000.404 Must self-governance Tribes/Consortia comply with the Secretarial approval requirements of 25 U.S.C. 81, 82a, and 476 regarding professional and attorney contracts?
1000.405 Are AFA funds non-Federal funds for the purpose of meeting matching requirements?
1000.406 Does Indian preference apply to services, activities, programs and functions performed under a self-governance AFA?
1000.407 Do the wage and labor standards in the Davis-Bacon Act apply to Tribes and Tribal Consortia?

**Supply Sources**

1000.408 Can a Tribe/Consortium use Federal supply sources in the performance of an AFA?

**Prompt Payment Act**

1000.409 Does the Prompt Payment Act (31 U.S.C. 3901) apply to a non-BIA, non-Indian program AFA?

**Subpart R—Appeals**

1000.420 What does ''Title-I eligible programs'' mean in this subpart?
1000.421 What is the purpose of this subpart?
1000.422 How must disputes be handled?
1000.423 Are there any decisions that are not administratively appealable under this subpart?
1000.424 Does a Tribe/Consortium have a right to an informal conference to resolve any disputes?
1000.425 How does a Tribe/Consortium request an informal conference?
1000.426 How is an informal conference held?
1000.427 What happens after the informal conference?
1000.428 How may a Tribe/Consortium appeal a decision made after the AFA or compact or amendment to an AFA or compact has been signed?
1000.429 What statutes and regulations govern resolution of disputes concerning signed AFAs or compacts that are appealed to IBCA?
1000.430 To whom are appeals directed regarding reassumption for imminent jeopardy?
1000.431 Does the Equal Access to Justice Act (EAJA) apply to appeals under this subpart?
1000.432 To whom may a Tribe appeal a decision made before the AFA or an amendment to the AFA or compact is signed?
1000.433 When and how must a Tribe/Consortium appeal an adverse pre-award decision?
1000.434 When must the bureau head (or appropriate Assistant Secretary) issue a final decision in the pre-award appeal?
1000.435 When and how will the Assistant Secretary respond to an appeal by a Tribe/Consortium?
1000.436 How may a Tribe/Consortium seek reconsideration of the Secretary's decision involving a self-governance compact?
1000.437 When will the Secretary respond to a request for reconsideration of a decision involving a self-governance compact?
1000.438 May Tribes/Consortia appeal Department decisions to a Federal court?

**Subpart S—Conflicts of Interest**

1000.460 What is an organizational conflict of interest?
1000.461 What must a Tribe/Consortium do if an organizational conflict of interest arises under an AFA?
1000.462 When must a Tribe/Consortium regulate its employees or subcontractors to avoid a personal conflict of interest?
1000.463 What types of personal conflicts of interest involving Tribal officers, employees or subcontractors would have to be regulated by a Tribe/Consortium?
1000.464 What personal conflicts of interest must the standards of conduct regulate?
1000.465 May a Tribe/Consortium negotiate AFA provisions on conflicts of interest to take the place of this subpart?
Appendix A—to Part 1000—Model Compact of Self-Governance Between the Tribe and the Department of the Interior

**Authority:** 25 U.S.C. 458aa–gg.

## Subpart A—General Provisions

### § 1000.1 Authority.

This part is prepared and issued by the Secretary of the Interior under the negotiated rulemaking procedures in 5 U.S.C. 565.

### § 1000.2 Definitions.

*403(c) Program* means a non-BIA program eligible under section 403(c) of the Indian Self-Determination and Education Assistance Act of 1975, as amended, 25 U.S.C. 450 *et seq.* and, specifically, a program, function, service, or activity that is of special geographic, historical or cultural significance to a self-governance Tribe/Consortium. These programs may be referred to, also, as ''nexus'' programs.

*Act* means the Tribal Self-Governance Act, Title IV of the Indian Self-Determination and Education Assistance Act of 1975, Pub. L. 93–638, as added by Pub. L. 103–413, amended by Pub. L. 104–109, as amended.

*Applicant pool* means Tribes/Consortia that the Director of the Office of Self-Governance has determined are eligible to participate in self-governance in accordance with § 1000.16 of these regulations.

*BIA* means the Bureau of Indian Affairs of the Department of the Interior.

*BIA Program* means any program, service, function, or activity, or portion thereof, that is performed or administered by the Department through the Bureau of Indian Affairs.

*Bureau* means a bureau or office of the Department of the Interior.

*Compact* means an executed document that affirms the government-to-government relationship between a self-governance Tribe and the United States. The compact differs from an annual funding agreement (AFA) in that parts of the compact apply to all bureaus within the Department of the Interior rather than a single bureau.

*Consortium* means an organization of Indian Tribes that is authorized by those Tribes to participate in self-governance under this part and is responsible for negotiating, executing, and implementing annual funding agreements and compacts.

*Construction management services (CMS)* means activities limited to

administrative support services, coordination, oversight of engineers and construction activities. CMS services include services that precede project design: all project design and actual construction activities are subject to Subpart K of these regulations whether performed by a Tribe subcontractor, or consultant.

*Days* means calendar days, except where the last day of any time period specified in this part falls on a Saturday, Sunday, or a Federal holiday, the period must carry over to the next business day unless otherwise prohibited by law.

*Director* means the Director of the Office of Self-Governance (OSG).

*DOI or Department* means the Department of the Interior.

*Funding year* means either fiscal or calendar year.

*Indian* means a person who is a member of an Indian Tribe.

*Indian Tribe or Tribe* means any Indian Tribe, band, nation or other organized group or community, including pueblos, rancherias, colonies and any Alaska Native village, or regional or village corporations as defined in or established pursuant to the Alaska Native Claims Settlement Act, that is recognized as eligible for special programs and services provided by the United States to Indians because of their status as Indians.

*Indirect cost rates* means the rate(s) arrived at through negotiation between an Indian Tribe/Consortium and the appropriate Federal agency.

*Indirect costs* means costs incurred for a common or joint purpose benefitting more than one program and that are not readily assignable to individual programs.

*Nexus Program* means a 403(c) Program as defined in this section.

*Non-BIA Bureau* means any bureau or office within the Department of the Interior other than the Bureau of Indian Affairs.

*Non-BIA programs* means those programs administered by bureaus or offices other than the Bureau of Indian Affairs within the Department of the Interior.

*Office of Self-Governance (OSG)* means the office within the Office of the Assistant Secretary-Indian Affairs responsible for the implementation and development of the Tribal Self-Governance Program.

*Program* means any program, service, function, or activity, or portions of programs administered by a bureau within the Department of the Interior.

*Pub. L. 93–638* means sections 1–9 and Title I of the Indian Self-Determination and Education Assistance Act of 1975, as amended.

*Reassumption* means that the Secretary reassumes control or operation of a program under § 1000.300 *et seq.*

*Retained Tribal shares* means those funds that were available as a Tribal share but under the AFA were left with BIA to administer.

*Retrocession* means the voluntary return by a Tribe/Consortium to a bureau of a program operated under an AFA before the agreement expires.

*Secretary* means the Secretary of the Interior (DOI) or his or her designee authorized to act on the behalf of the Secretary as to the matter at hand.

*Self-governance Tribe/Consortium* means a Tribe or Consortium that participates in permanent self-governance through application and selection from the applicant pool or has participated in the Tribal self-governance demonstration project. May also be referred to as ''participating Tribe/Consortium.''

*Successor AFA* means a funding agreement negotiated after a Tribe's/Consortium's initial agreement with a bureau for continuing to perform a particular program. The parties to the AFA should generally use the terms of the existing AFA to expedite and simplify the exchange of information and the negotiation process.

*Tribal share* means the amount determined for that Tribe/Consortium for a particular program at BIA region, agency, and central office levels under sec. 403(g)(3) and 405(d) of the Act.

### § 1000.3 Purpose and scope.

(a) *General.* This part codifies uniform and consistent rules for the Department of the Interior (DOI) in implementing Title IV of the Indian Self-Determination and Education Assistance Act (ISDEA) Public Law 93–638, 25 U.S.C. 450 *et seq.*, as amended by Title II of Pub. L. 103–413, the Tribal Self-Governance Act of 1994 (108 Stat. 4250, October 25, 1994).

(b) *Information Collection.* The information provided by the Tribes will be used by the Department for a variety of purposes. The first purpose will be to ensure that qualified applicants are admitted into the applicant pool consistent with the requirements of the Act. In addition, Tribes seeking grant assistance to meet the planning requirements for admission into the applicant pool, will provide information so that grants can be awarded to Tribes meeting basic eligibility (*i.e.* Tribal resolution indicating that the Tribe wants to plan for Self-Governance and has no material audit exceptions for the last three years of audits). There is no confidential information being solicited and confidentiality is not extended under the law. Other documentation is required to meet the reporting requirements as called for in section 405 of the Act. The information being provided by the Tribes is required to obtain a benefit, however, no person is required to respond to an information collection request unless the form or regulation requesting the information has a currently valid OMB control (clearance) number. Comments were solicited from the Tribes and the general public with respect to this collection. No adverse comments were received. The information collection has been cleared by OMB. The number is OMB control #1076–0143. The approval expires on April 30, 2003.

### § 1000.4 Policy statement.

(a) *Congressional findings.* In the Tribal Self-Governance Act of 1994, the Congress found that:

(1) The Tribal right of self-governance flows from the inherent sovereignty of Indian Tribes and nations;

(2) The United States recognizes a special government-to-government relationship with Indian Tribes, including the right of the Tribes to self-governance, as reflected in the Constitution, treaties, Federal statues, and the course of dealings of the United States with Indian Tribes;

(3) Although progress had been made, the Federal bureaucracy, with its centralized rules and regulations, had eroded Tribal self-governance and dominated Tribal affairs;

(4) The Tribal Self-Governance Demonstration Project was designed to improve and perpetuate the government-to-government relationship between Indian Tribes and the United States and to strengthen Tribal control over Federal funding and program management; and

(5) Congress has reviewed the results of the Tribal Self-Governance demonstration project and finds that:

(i) Transferring control over funding and decision making to Tribal governments, upon Tribal request, for Federal programs is an effective way to implement the Federal policy of government-to-government relations with Indian Tribes; and

(ii) Transferring control over funding and decision making to Tribal governments, upon request, for Federal programs strengthens the Federal policy of Indian self-determination.

(b) *Congressional declaration of policy.* It is the policy of the Tribal Self-Governance Act to permanently establish and implement self-governance:

(1) To enable the United States to maintain and improve its unique and continuing relationship with, and responsibility to, Indian Tribes;

(2) To permit each Tribe to choose the extent of its participation in self-governance;

(3) To coexist with the provisions of the Indian Self-Determination and Education Assistance Act relating to the provision of Indian services by designated Federal agencies;

(4) To ensure the continuation of the trust responsibility of the United States to Indian Tribes and Indian individuals;

(5) To permit an orderly transition from Federal domination of programs and services to provide Indian Tribes with meaningful authority to plan, conduct, redesign, and administer programs, services, functions, and activities that meet the needs of the individual Tribal communities; and

(6) To provide for an orderly transition through a planned and measurable parallel reduction in the Federal bureaucracy.

(c) *Secretarial self-governance policies.* (1) It is the policy of the Secretary to fully support and implement the foregoing policies to the full extent of the Secretary's authority.

(2) It is the policy of the Secretary to recognize and respect the unique government-to-government relationship between Tribes, as sovereign governments, and the United States.

(3) It is the policy of the Secretary to have all bureaus of the Department work cooperatively and pro-actively with Tribes and Tribal Consortia on a government-to-government basis within the framework of the Act and any other applicable provision of law, so as to make the ideals of self-determination and self-governance a reality.

(4) It is the policy of the Secretary to have all bureaus of the Department actively share information with Tribes and Tribal Consortia to encourage Tribes and Tribal Consortia to become knowledgeable about the Department's programs and the opportunities to include them in an annual funding agreement.

(5) It is the policy of the Secretary that all bureaus of the Department will negotiate in good faith, interpret each applicable Federal law and regulation in a manner that will facilitate the inclusion of programs in each annual funding agreement authorized, and enter into such annual funding agreements under Title IV, whenever possible.

(6) It is the policy of the Secretary to afford Tribes and Tribal Consortia the maximum flexibility and discretion necessary to meet the needs of their communities consistent with their diverse demographic, geographic, economic, cultural, health, social, religious, and institutional needs. These policies are designed to facilitate and encourage Tribes and Tribal Consortia to participate in the planning, conduct, and administration of those Federal programs, included, or eligible for inclusion in an annual funding agreement.

(7) It is the policy of the Secretary, to the extent of the Secretary's authority, to maintain active communication with Tribal governments regarding budgetary matters applicable to programs subject to the Act, and that are included in an individual self-governance annual funding agreement.

(8) It is the policy of the Secretary to implement policies, procedures, and practices at the Department to ensure that the letter, spirit, and goals of the Tribal Self-Governance Act are fully and successfully implemented.

(9) Executive Order 13084 on Consultation and Coordination with Indian Tribal Governments and any subsequent Executive Orders regarding consultation will apply to the implementation of these regulations.

## Subpart B—Selection of Additional Tribes for Participation in Tribal Self-Governance

### Purpose and Definitions

#### § 1000.10 What is the purpose of this subpart?

This subpart describes the selection process and eligibility criteria that the Secretary uses to decide that Indian Tribes may participate in Tribal self-governance as authorized by section 402 of the Tribal Self-Governance Act of 1994.

#### § 1000.11 What is the ''applicant pool''?

The applicant pool is the pool of Tribes/Consortia that the Director of the Office of Self-Governance has determined are eligible to participate in self-governance.

#### § 1000.12 What is a ''signatory''?

A signatory is a Tribe or Consortium that meets the eligibility criteria in § 1000.16 and directly signs the agreements. A signatory may exercise all of the rights and responsibilities outlined in the compact and annual funding agreement and is legally responsible for all financial and administrative decisions made by the signatory.

#### § 1000.13 What is a ''nonsignatory Tribe''?

(a) A nonsignatory Tribe is a Tribe that either:

(1) Does not meet the eligibility criteria in § 1000.16 and, by resolution of its governing body, authorizes a Consortium to participate in self-governance on its behalf.

(2) Meets the eligibility criteria in § 1000.16 but chooses to be a member of a Consortium and have a representative of the Consortium sign the compact and AFA on its behalf.

(b) A non-signatory tribe under paragraph (a)(1) of this section:

(1) May not sign the compact and AFA. A representative of the Consortium must sign both documents on behalf of the Tribe.

(2) May only become a ''signatory Tribe'' if it independently meets the eligibility criteria in § 1000.16.

### Eligibility

#### § 1000.14 Who is eligible to participate in Tribal self-governance?

Two types of entities are eligible to participate in Tribal self-governance:

(a) Indian Tribes; and

(b) Consortia of Indian Tribes.

#### § 1000.15 How many additional Tribes/Consortia may participate in self-governance per year?

(a) Sections 402(b) and (c) of the Act authorize the Director to select up to 50 additional Indian Tribes per year from an ''applicant pool''. A Consortium of Indian Tribes counts as one Tribe for purposes of calculating the 50 additional Tribes per year.

(b) Any signatory Tribe that signed a compact and AFA under the Tribal Self-Governance Demonstration project may negotiate its own compact and AFA in accordance with this subpart without being counted against the 50-Tribe limitation in any given year.

#### § 1000.16 What criteria must a Tribe/Consortium satisfy to be eligible for admission to the ''applicant pool''?

To be admitted into the applicant pool, a Tribe/Consortium must either be an Indian Tribe or a Consortium of Indian Tribes and comply with § 1000.17.

#### § 1000.17 What documents must a Tribe/Consortium submit to OSG to apply for admission to the applicant pool?

In addition to the application required by § 1000.23, the Tribe/Consortium must submit to OSG documentation that shows all of the following:

(a) *Successful completion of a planning phase and a planning report.* The requirements for both of these are described in § 1000.19 and § 1000.20. A Consortium's planning activities satisfy this requirement for all its member Tribes for the purpose of the Consortium meeting this requirement;

(b) *A request for participation in self-governance by a Tribal resolution and/or a final official action by the Tribal governing body.* For a Consortium, the governing body of each Tribe must authorize its participation by a Tribal resolution and/or a final official action by the Tribal governing body that specifies the scope of the Consortium's authority to act on behalf of the Tribe.

(c) *A demonstration of financial stability and financial management capability for the previous 3 fiscal years.* This will be done by providing, as part of the application, an audit report prepared in accordance with procedures promulgated under the Single Audit Act Amendments of 1996, 31 U.S.C. 7501, *et seq.*, for the previous 3 years of the self-determination contracts. These audits must not contain material audit exceptions as defined in § 1000.21.

**§ 1000.18 May a Consortium member Tribe withdraw from the Consortium and become a member of the applicant pool?**

In accordance with the expressed terms of the compact or written agreement of the Consortium, a Consortium member Tribe (either a signatory or nonsignatory Tribe) may withdraw from the Consortium to directly negotiate a compact and AFA. The withdrawing Tribe must do the following.

(a) Independently meet all of the eligibility criteria in §§ 1000.14 through 1000.20. If a Consortium's planning activities and report specifically consider self-governance activities for a member Tribe, that planning activity and report may be used to satisfy the planning requirements for the member Tribe if it applies for self-governance status on its own.

(b) Submit a notice of withdrawal to OSG and the Consortium as evidenced by a resolution of the Tribal governing body.

**§ 1000.19 What is done during the "planning phase"?**

The Act requires that all Tribes/Consortia seeking to participate in Tribal self-governance complete a planning phase. During the planning phase, the Tribe/Consortium must conduct legal and budgetary research and internal Tribal government and organizational planning. The availability of BIA grant funds for planning activities will be in accordance with subpart C. The planning phase may be completed without a planning grant.

**§ 1000.20 What is required in a planning report?**

As evidence that the Tribe/Consortium has completed the planning phase, the Tribe/Consortium must prepare and submit to the Secretary a final planning report.

(a) The planning report must:

(1) Identify BIA and non-BIA programs that the Tribe/Consortium may wish to subsequently negotiate for inclusion in a compact and AFA;

(2) Describe the Tribe's/Consortium's planning activities for both BIA and non-BIA programs that may be negotiated;

(3) Identify the major benefits derived from the planning activities;

(4) Identify the process that the Tribe/Consortium will use to resolve any complaints by service recipients;

(5) Identify any organizational planning that the Tribe/Consortium has completed in anticipation of implementing Tribal self-governance; and

(6) Indicate if the Tribe's/Consortium's planning efforts have revealed that its current organization is adequate to assume programs under Tribal self-governance.

(b) In supplying the information required by paragraph (a)(5) of this section:

(1) For BIA programs, a Tribe/Consortium should describe the process that it will use to debate and decide the setting of priorities for the funds it will receive from its AFA.

(2) For non-BIA programs that the Tribe/Consortium may wish to negotiate, the report should describe how the Tribe/Consortium proposes to perform the programs.

**§ 1000.21 When does a Tribe/Consortium have a "material audit exception"?**

A Tribe/Consortium has a material audit exception if any of the audits that it submitted under § 1000.17(c) identifies:

(a) A material weakness, that is a condition in which the design or operation of one or more of the internal control components does reduce to a relatively low level the risk that misstatements in amounts that would be material in relation to the financial statements being audited may occur and not be detected within a timely period by employees in the normal course of performing their assigned functions;

(b) a single finding of known questioned costs subsequently disallowed by a contracting officer or awarding official that exceeds $10,000. If the audits submitted under § 1000.17(c) identify any of the conditions described in this section, the Tribe/Consortium must also submit copies of the contracting officer's findings and determinations.

**§ 1000.22 What are the consequences of having a material audit exception?**

If a Tribe/Consortium has a material audit exception, the Tribe/Consortium is ineligible to participate in self-governance until the Tribe/Consortium meets the eligibility criteria in § 1000.16.

## Admission Into the Applicant Pool

**§ 1000.23 How is a Tribe/Consortium admitted to the applicant pool?**

To be considered for admission in the applicant pool, a Tribe/Consortium must submit an application to the Director, Office of Self-Governance, 1849 C Street NW; MS 2542–MIB; Department of the Interior; Washington, DC 20240. The application must contain the documentation required in § 1000.17.

**§ 1000.24 When does OSG accept applications to become a member of the applicant pool?**

OSG accepts applications to become a member of the applicant pool at any time.

**§ 1000.25 What are the deadlines for a Tribe/Consortium in the applicant pool to negotiate a compact and annual funding agreement (AFA)?**

(a) To be considered for negotiations in any year, a Tribe/Consortium must be a member of the applicant pool on March 1 of the year in which the negotiations are to take place.

(b) An applicant may be admitted into the applicant pool during one year and selected to negotiate a compact and AFA in a subsequent year. In this case, the applicant must, before March 1 of the negotiation year, submit to OSG updated documentation that permits OSG to evaluate whether the Tribe/Consortium still satisfies the application criteria in 1000.17.

**§ 1000.26 Under what circumstances will a Tribe/Consortium be removed from the applicant pool?**

Once admitted into the applicant pool, a Tribe/Consortium will only be removed if it:

(a) Fails to satisfy the audit criteria in § 1000.17(c); or

(b) Submits to OSG a Tribal resolution and/or official action by the Tribal governing body requesting removal.

**§ 1000.27 How does the Director select which Tribes in the applicant pool become self-governance Tribes?**

The Director selects up to the first 50 Tribes from the applicant pool in any given year ranked according to the earliest postmark date of complete applications. If multiple complete applications have the same postmark

date and there are insufficient slots available for that year, the Director will determine priority through random selection. A representative of each Tribe/Consortium that has submitted an application subject to random selection may, at the option of the Tribe/Consortium, be present when the selection is made.

**§ 1000.28 What happens if an application is not complete?**

(a) If OSG determines that a Tribe's/Consortium's application is deficient, OSG will immediately notify the Tribe/Consortium of the deficiency by letter, certified mail, return receipt requested. The letter will explain what the Tribe/Consortium must do to correct the deficiency.

(b) The Tribe/Consortium will have 20 working days from the date of receiving the letter to mail or telefax the corrected material and retain the applicant's original postmark.

(c) If the corrected material is deficient, the date of entry into the applicant pool will be the date the complete application is postmarked.

(d) If the postmark or date on the applicant's response letter or telefax is more than 20 working days after the date the applicant received the notice-of-deficiency letter, the date of entry into the applicant pool will be the date of full receipt of a completed application.

**§ 1000.29 What happens if a Tribe/Consortium is selected from the applicant pool but does not execute a compact and an AFA during the calendar year?**

(a) The Tribe/Consortium remains eligible to negotiate a compact and annual funding agreement at any time unless:

(1) It notifies the Director in writing that it no longer wishes to be eligible to participate in the Tribal Self-Governance Program;

(2) Fails to satisfy the audit requirements of § 1000.17(c); or

(3) Submits documentation evidencing a Tribal resolution requesting removal from the application pool.

(b) The failure of the Tribe/Consortium to execute an agreement has no effect on the selection of up to 50 additional Tribes/Consortia in a subsequent year.

**§ 1000.30 May a Tribe/Consortium be selected to negotiate an AFA under section 403(b)(2) without having or negotiating an AFA under section 403(b)(1)?**

Yes, a Tribe/Consortium may be selected to negotiate an AFA under section 403(b)(2) without having or negotiating an AFA under section 403(b)(1).

**§ 1000.31 May a Tribe/Consortium be selected to negotiate an AFA under section 403(c) without negotiating an AFA under section 403(b)(1) and/or section 403(b)(2)?**

No, section 403(c) of the Act states that any programs of special geographic, cultural, or historical significance to the Tribe/Consortium must be included in AFAs negotiated under section 403(a) and/or section 403(b). A Tribe may be selected to negotiate an AFA under section 403(c) at the same time that it negotiates an AFA under section 403(b)(1) and/or section 403(b)(2).

## Withdrawal From a Consortium Annual Funding Agreement

**§ 1000.32 What happens when a Tribe wishes to withdraw from a Consortium annual funding agreement?**

(a) A Tribe wishing to withdraw from a Consortium's AFA must notify the Consortium, bureau, and OSG of the intent to withdraw. The notice must be:

(1) In the form of a Tribal resolution or other official action by the Tribal governing body; and

(2) Received no later than 180 days before the effective date of the next AFA.

(b) The resolution referred to in paragraph (a)(1) of this section must indicate whether the Tribe wishes the withdrawn programs to be administered under a Title IV AFA, Title I contract, or directly by the bureau.

(c) The effective date of the withdrawal will be the date on which the current agreement expires, unless the Consortium, the Tribe, OSG, and the appropriate bureau agree otherwise.

**§ 1000.33 What amount of funding is to be removed from the Consortium's AFA for the withdrawing Tribe?**

When a Tribe withdraws from a Consortium, the Consortium's AFA must be reduced by the portion of funds attributable to the withdrawing Tribe. The Consortium must reduce the AFA on the same basis or methodology upon which the funds were included in the Consortium's AFA.

(a) If there is not a clear identifiable methodology upon which to base the reduction for a particular program, the Consortium, Tribe, OSG, and the bureau must negotiate an appropriate amount on a case-by-case basis.

(b) If a Tribe withdraws in the middle of a funding year, the Consortium agreement must be amended to reflect:

(1) A reduction based on the amount of funds passed directly to the Tribe, or already spent or obligated by the Consortium on behalf of the Tribe; and

(2) That the Consortium is no longer providing those programs associated with the withdrawn funds.

(c) Carryover funds from a previous fiscal year may be factored into the amount by which the Consortium agreement is reduced if:

(1) The Consortium, Tribe, OSG, and bureau agree it is appropriate; and

(2) The funds are clearly identifiable.

**§ 1000.34 What happens if there is a dispute between the Consortium and the withdrawing Tribe?**

(a) At least 15 days before the 90-day Congressional review period of the next AFA, the Consortium, OSG, bureau, and the withdrawing Tribe must reach an agreement on the amount of funding and other issues associated with the program or programs involved.

(b) If agreement is not reached:

(1) For BIA and OIEP programs, at least 5 days before the 90-day Congressional review, the Director must make a decision on the funding or other issues involved.

(2) For non-BIA programs, the bureau head will make a decision on the funding or other issues involved.

(c) A copy of the decision made under paragraph (b) of this section must be distributed in accordance with the following table.

| If the program is . . . | then a copy of the decision must be sent to . . . |
|---|---|
| (1) A BIA program. | BIA regional director, the Deputy Commissioner of Indian Affairs, the withdrawing Tribe, and the Consortium. |
| (2) An OIEP program. | the OIEP line officer, the Director of OIEP, the withdrawing Tribe, and the Consortium. |

(d) Any decision made under paragraph (b) of this section is appealable under subpart R of this part.

**§ 1000.35 When a Tribe withdraws from a Consortium, is the Secretary required to award to the withdrawing Tribe a portion of funds associated with a construction project if the withdrawing Tribe so requests?**

Under § 1000.32 of this part, a Tribe may withdraw from a Consortium and request that the Secretary award the Tribe its portion of a construction project's funds. The Secretary may decide not to award these funds if the Secretary determines that the award of the withdrawing Tribe's portion of funds would affect the ability of the remaining members of the Consortium to complete a severable or non-severable phase of the project within available funding.

(a) An example of a non-severable phase of a project would be the construction of a single building to serve all members of a Consortium.

(b) An example of a severable phase of a project would be the funding of a road in one village where the Consortium would be able to complete the roads in other villages that were part of the project approved initially in the AFA.

(c) The Secretary's decision under this section may be appealed under § 1000.428 of these regulations.

## Subpart C—Section 402(d) Planning and Negotiation Grants

### Purpose and Types of Grants

#### § 1000.40 What is the purpose of this subpart?

This subpart describes the availability and process of applying for planning and negotiation grants authorized by section 402(d) of the Act to help Tribes meet costs incurred in:

(a) Meeting the planning phase requirement of the Act, including planning to negotiate for non-BIA programs; and

(b) Conducting negotiations.

#### § 1000.41 What types of grants are available?

Three categories of grants may be available:

(a) Negotiation grants may be awarded to the Tribes/Consortia that have been selected from the applicant pool as described in subpart B of this part;

(b) Planning grants may be available to Tribes/Consortia requiring advance funding to meet the planning phase requirement of the Act; and

(c) Financial assistance may be available to Tribes/Consortia to plan for negotiating for non-BIA programs, as described in subpart D and §§ 1000.42–1000.45 of this subpart.

### Availability, Amount, and Number of Grants

#### § 1000.42 Will grants always be made available to meet the planning phase requirement as described in section 402(d) of the Act?

No, grants to cover some or all of the planning costs that a Tribe/Consortium may incur, depend upon the availability of funds appropriated by Congress. Notice of availability of grants will be published in the **Federal Register** as described in § 1000.45.

#### § 1000.43 May a Tribe/Consortium use its own resources to meet its self-governance planning and negotiation expenses?

Yes, a Tribe/Consortium may use its own resources to meet these costs. Receiving a grant is not necessary to meet the planning phase requirement of the Act or to negotiate a compact and an AFA.

#### § 1000.44 What happens if there are insufficient funds to meet the Tribal requests for planning/negotiation grants in any given year?

If appropriated funds are available but insufficient to meet the total requests from Tribes/Consortia:

(a) First priority will be given to Tribes/Consortia that have been selected from the applicant pool to negotiate an AFA; and

(b) Second priority will be given to Tribes/Consortia that require advance funds to meet the planning requirement for entry into the self-governance program.

#### § 1000.45 How many grants will the Department make each year and what funding will be available?

The number and size of grants awarded each year will depend on Congressional appropriations and Tribal interest. By no later than January 1 of each year, the Director will publish a notice in the **Federal Register** that provides relevant details about the application process, including the funds available, timeframes, and requirements for negotiation grants, advance planning grants, and financial assistance as described in subpart D of this part.

### Selection Criteria

#### § 1000.46 Which Tribes/Consortia may be selected to receive a negotiation grant?

Any Tribe/Consortium that has been accepted into the applicant pool and has been accepted to negotiate a self-governance AFA may apply for a negotiation grant. By March 15 of each year, the Director will publish a list of additional Tribes/Consortia that have been selected for negotiation along with information on how to apply for negotiation grants.

#### § 1000.47 What must a Tribe/Consortium do to receive a negotiation grant?

If funds are available, a grant will be awarded to help cover the costs of preparing for and negotiating a compact and an AFA. These grants are not competitive. To receive a negotiation grant, a Tribe/Consortium must:

(a) Be selected from the applicant pool to negotiate an AFA;

(b) Be qualified as eligible to receive a negotiation grant in the **Federal Register** notice discussed in § 1000.45;

(c) Not have received a negotiation grant within the 3 years preceding the date of the latest **Federal Register** announcement;

(d) Submit a letter affirming its readiness to negotiate; and

(e) Formally request a negotiation grant to prepare for and negotiate an AFA.

#### § 1000.48 What must a Tribe do if it does not wish to receive a negotiation grant?

A selected Tribe/Consortium may elect to negotiate without applying for a negotiation grant. In such a case, the Tribe/Consortium should notify OSG in writing so that funds can be reallocated for other grants.

### Advance Planning Grant Funding

#### § 1000.49 Who can apply for an advance planning grant?

Any Tribe/Consortium that is not a self-governance Tribe and needs advance funding to complete the planning phase requirement may apply. Tribes/Consortia that have received a planning grant within 3 years preceding the date of the latest **Federal Register** announcement are not eligible.

#### § 1000.50 What must a Tribe/Consortium seeking a planning grant submit in order to meet the planning phase requirements?

A Tribe/Consortium must submit the following material:

(a) A Tribal resolution or other final action of the Tribal governing body indicating a desire to plan for Tribal self-governance.

(b) Audits from the last 3 years that document that the Tribe/Consortium is free from material audit exceptions. In order to meet this requirement, a Tribe/Consortium may use the audit currently being conducted on its operations if this audit is submitted before the Tribe/Consortium completes the planning activity.

(c) A proposal that includes:

(1) The Tribe's/Consortium's plans for conducting legal and budgetary research;

(2) The Tribe's/Consortium's plans for conducting internal Tribal government and organizational planning;

(3) A timeline indicating when planning will start and end, and;

(4) Evidence that the Tribe/Consortium can perform the tasks associated with its proposal (i.e., resumes and position descriptions of key staff or consultants to be used).

#### § 1000.51 How will Tribes/Consortia know when and how to apply for planning grants?

The number and size of grants awarded each year will depend on Congressional appropriations. By no later than January 1 of each year, the Director will publish in the **Federal Register** a notice concerning the availability of planning grants for

additional Tribes. This notice must identify the specific details for applying.

**§ 1000.52 What criteria will the Director use to award advance planning grants?**

Advance planning grants are discretionary and based on need. The Director will use the following criteria to determine whether or not to award a planning grant to a Tribe/Consortium before the Tribe/Consortium is selected into the applicant pool.

(a) Completeness of application as described in § 1000.50.

(b) Financial need. The Director will rank applications according to the percent of Tribal resources that comprise total resources covered by the latest A–133 audit. Priority will be given to applications that have a lower level of Tribal resources as a percent of total resources.

(c) Other factors that the Tribe may identify as documenting its previous efforts to participate in self-governance and demonstrating its readiness to enter into a self-governance agreement.

**§ 1000.53 Can Tribes/Consortia that receive advance planning grants also apply for a negotiation grant?**

Yes, Tribes/Consortia that successfully complete the planning activity and are selected may apply to be included in the applicant pool. Once approved for inclusion in the applicant pool, the Tribe/Consortium may apply for a negotiation grant according to the process in §§ 1000.46–1000.48.

**§ 1000.54 How will a Tribe/Consortium know whether or not it has been selected to receive an advance planning grant?**

No later than June 1, the Director will notify the Tribe/Consortium by letter whether it has been selected to receive an advance planning grant.

**§ 1000.55 Can a Tribe/Consortium appeal within DOI the Director's decision not to award a grant under this subpart?**

No, the Director's decision to award or not to award a grant under this subpart is final for the Department.

## Subpart D—Other Financial Assistance for Planning and Negotiation Grants for Non-BIA Programs

### Purpose and Eligibility

**§ 1000.60 What is the purpose of this subpart?**

This subpart describes the availability and process of applying for other financial assistance that may be available for planning and negotiating for a non-BIA program.

**§ 1000.61 Are other funds available to self-governance Tribes/Consortia for planning and negotiating with non-BIA bureaus?**

Yes, Tribes/Consortia may contact OSG to determine if OSG has funds available for the purpose of planning and negotiating with non-BIA bureaus under this subpart. A Tribe/Consortium may also ask a non-BIA bureau for information on any funds that may be available from that bureau.

### Eligibility and Application Process

**§ 1000.62 Who can apply to OSG for grants to plan and negotiate non-BIA programs?**

Any Tribe/Consortium that is in the applicant pool, or has been selected from the applicant pool or that has an existing AFA.

**§ 1000.63 Under what circumstances may planning and negotiation grants be awarded to Tribes/Consortia?**

At the discretion of the Director, grants may be awarded when requested by the Tribe. Tribes/Consortia may submit only one application per year for a grant under this section.

**§ 1000.64 How does the Tribe/Consortium know when and how to apply to OSG for a planning and negotiation grant?**

When funds are available, the Director will publish a notice in the **Federal Register** announcing their availability and a deadline for submitting an application.

**§ 1000.65 What kinds of activities do planning and negotiation grants support?**

The planning and negotiation grants support activities such as, but not limited to, the following:

(a) Information gathering and analysis;

(b) Planning activities, that may include notification and consultation with the appropriate non-BIA bureau and identification and/or analysis of activities, resources, and capabilities that may be needed for the Tribe/Consortium to assume non-BIA programs; and

(c) Negotiation activities.

**§ 1000.66 What must be included in the application?**

The application for a planning and negotiation grant must include:

(a) Written notification by the governing body or its authorized representative of the Tribe's/Consortium's intent to engage in planning/negotiation activities like those described in § 1000.65;

(b) Written description of the planning and/or negotiation activities that the Tribe/Consortium intends to undertake, including, if appropriate, documentation of the relationship between the proposed activities and the Tribe/Consortium;

(c) The proposed timeline for completion of the planning and/or negotiation activities to be undertaken; and

(d) The amount requested from OSG.

**§ 1000.67 How will the Director award planning and negotiation grants?**

The Director must review all grant applications received by the date specified in the announcement to determine whether or not the applications include the required elements outlined in the announcement. OSG must rank the complete applications submitted by the deadline using the criteria in § 1000.70.

**§ 1000.68 May non-BIA bureaus provide technical assistance to a Tribe/Consortium in drafting its planning grant application?**

Yes, upon request from the Tribe/Consortium, a non-BIA bureau may provide technical assistance to the Tribe/Consortium in the drafting of its planning grant application.

**§ 1000.69 How can a Tribe/Consortium obtain comments or selection documents received or utilized after OSG has made a decision on a planning grant application?**

A Tribe/Consortium may request comments or selection documents under the Freedom of Information Act.

**§ 1000.70 What criteria will the Director use to rank the applications and how many maximum points can be awarded for each criterion?**

The Director will use the following criteria and point system to rank the applications:

(a) The application contains a clear statement of objectives and timelines to complete the proposed planning or negotiation activity and demonstrates that the objectives are legally authorized and achievable. (20 points)

(b) The proposed budget expenses are reasonable. (10 points)

(c) The proposed project demonstrates a new or unique approach to Tribal self-governance or broadens self-governance to include new activities within the Department. (5 points)

**§ 1000.71 Can an applicant appeal a decision not to award a grant?**

No, all decisions made by the Director to award or not to award a grant under this subpart are final for the Department.

**§ 1000.72 Will OSG notify Tribes/Consortia and affected non-BIA bureaus of the results of the selection process?**

Yes, OSG will notify all applicant Tribes/Consortia and affected non-BIA

bureaus in writing as soon as possible after completing the selection process.

**§ 1000.73 Once a Tribe/Consortium has been awarded a grant, may the Tribe/Consortium obtain information from a non-BIA bureau?**

Yes, see § 1000.169.

## Subpart E—Annual Funding Agreements for Bureau of Indian Affairs Programs

**§ 1000.80 What is the purpose of this subpart?**

This subpart describes the components of annual funding agreements for BIA programs.

**§ 1000.81 What is an annual funding agreement (AFA)?**

Annual funding agreements are legally binding and mutually enforceable written agreements negotiated and entered into annually between a self-governance Tribe/Consortium and BIA.

### Contents and Scope of Annual Funding Agreements

**§ 1000.82 What types of provisions must be included in a BIA AFA?**

Each AFA must specify the programs and it must also specify the applicable funding:

(a) Retained by BIA for ''inherently Federal functions'' identified as ''residuals'' (See § 1000.94);

(b) Transferred or to be transferred to the Tribe/Consortium (See § 1000.91); and

(c) Retained by BIA to carry out functions that the Tribe/Consortium could have assumed but elected to leave with BIA. (See § 1000.101).

**§ 1000.83 Can additional provisions be included in an AFA?**

Yes, any provision that the parties mutually agreed upon may be included in an AFA.

**§ 1000.84 Does a Tribe/Consortium have the right to include provisions of Title I of Pub. L. 93–638 in an AFA?**

Yes, under Pub. L. 104–109, a Tribe/Consortium has the right to include any provision of Title I of Pub. L. 93–638 in an AFA.

**§ 1000.85 Can a Tribe/Consortium negotiate an AFA with a term that exceeds one year?**

Yes, at the option of the Tribe/Consortium, and subject to the availability of Congressional appropriations, a Tribe/Consortium may negotiate an AFA with a term that exceeds one year in accordance with section 105(c)(1) of Title I of Pub. L. 93–638.

### Determining What Programs May Be Included in an AFA

**§ 1000.86 What types of programs may be included in an AFA?**

A Tribe/Consortium may include in its AFA programs administered by BIA, without regard to the BIA agency or office that administers the program, including any program identified in section 403(b)(1) of the Act.

**§ 1000.87 How does the AFA specify the services provided, functions performed, and responsibilities assumed by the Tribe/Consortium and those retained by the Secretary?**

(a) The AFA must specify in writing the services, functions, and responsibilities to be assumed by the Tribe/Consortium and the functions, services, and responsibilities to be retained by the Secretary.

(b) Any division of responsibilities between the Tribe/Consortium and BIA should be clearly stated in writing as part of the AFA. Similarly, when there is a relationship between the program and BIA's residual responsibility, the relationship should be in writing.

**§ 1000.88 Do Tribes/Consortia need Secretarial approval to redesign BIA programs that the Tribe/Consortium administers under an AFA?**

No, the Secretary does not have to approve a redesign of a program under the AFA, except when the redesign involves a waiver of a regulation.

(a) The Secretary must approve any waiver, in accordance with subpart J of this part, before redesign takes place.

(b) This section does not authorize redesign of programs where other prohibitions exist.

(c) Redesign shall not result in the Tribe/Consortium being entitled to receive more or less funding for the program from BIA.

(d) Redesign of construction project(s) included in an AFA must be done in accordance with subpart K of this part.

**§ 1000.89 Can the terms and conditions in an AFA be amended during the year it is in effect?**

Yes, terms and conditions in an AFA may be amended during the year it is in effect as agreed to by both the Tribe/Consortium and the Secretary.

**§ 1000.90 What happens if an AFA expires before the effective date of the successor AFA?**

If the effective date of the successor AFA is not on or before the expiration of the current AFA, subject to terms mutually agreed upon by the Tribe/Consortium and the Department at the time the current AFA was negotiated or in a subsequent amendment, the Tribe/Consortium may continue to carry out the program authorized under the AFA to the extent adequate resources are available. During this extension period, the current AFA shall remain in effect, including coverage of the Tribe/Consortium under the Federal Tort Claims Act (FTCA) 28 U.S.C. 2671–2680 (1994), and the Tribe/Consortium may use any funds remaining under the AFA, savings from other programs or Tribal funds to carry out the program. Nothing in this section authorizes an AFA to be continued beyond the completion of the program authorized under the AFA or the amended AFA. This section also does not entitle a Tribe/Consortium to receive, nor does it prevent a Tribe from receiving, additional funding under any successor AFA. The successor AFA must provide funding to the Tribe/Consortium at a level necessary for the Tribe/Consortium to perform the programs, functions, services, and activities or portions thereof (PFSAs) for the full period it was or will be performed.

### Determining AFA Amounts

**§ 1000.91 What funds must be transferred to a Tribe/Consortium under an AFA?**

(a) At the option of the Tribe/Consortium, the Secretary must provide the following program funds to the Tribe/Consortium through an AFA:

(1) An amount equal to the amount that the Tribe/Consortium would have been eligible to receive under contracts and grants for direct programs and contract support under Title I of Pub. L. 93–638, as amended;

(2) Any funds that are specifically or functionally related to providing services and benefits to the Tribe/Consortium or its members by the Secretary without regard to the organizational level within BIA where such functions are carried out; and

(3) Any funds otherwise available to Indian Tribes or Indians for which appropriations are made to agencies other than the Department of the Interior;

(b) Examples of the funds referred to in paragraphs (a)(1) and (a)(2) of this section are:

(1) A Tribe's/Consortium's Pub. L. 93–638 contract amounts;

(2) Negotiated amounts of agency, regional and central office funds, including previously undistributed funds or new programs on the same basis as they are made available to other Tribes;

(3) Other recurring funding;

(4) Non-recurring funding;

(5) Special projects, if applicable;

(6) Construction;

(7) Wildland firefighting accounts;
(8) Competitive grants; and
(9) Congressional earmarked funding.
(c) An example of the funds referred to in paragraph (a)(3) of this section is Federal Highway Administration funds.

**§ 1000.92 What funds may not be included in an AFA?**

Funds associated with programs prohibited from inclusion under section 403(b)(4) of the Act may not be included in an AFA.

**§ 1000.93 May the Secretary place any requirements on programs and funds that are otherwise available to Tribes/Consortia or Indians for which appropriations are made to agencies other than DOI?**

No, unless the Secretary is required to develop terms and conditions that are required by law or that are required by the agency to which the appropriation is made.

**§ 1000.94 What are BIA residual funds?**

BIA residual funds are the funds necessary to carry out BIA residual functions. BIA residual functions are those functions that only BIA employees could perform if all Tribes were to assume responsibilities for all BIA programs that the Act permits.

**§ 1000.95 How is BIA's residual determined?**

(a) Generally, residual information will be determined through a process that is consistent with the overall process used by the BIA. Residual information will consist of residual functions performed by the BIA, brief justification why the function is not compactible, and the estimated funding level for each residual function. Each regional office and the central office will compile a single document for distribution each year that contains all the residual information of that respective office. The development of the residual information will be based on the following principles. The BIA will:

(1) Develop uniform residual information to be used to negotiate residuals;
(2) Ensure functional consistency throughout BIA in the determination of residuals;
(3) Make the determination of residuals based upon the functions actually being performed by BIA at the respective office;
(4) Annually consult with Tribes on a region-by-region basis as requested by Tribes/Consortia; and
(5) Notify Tribal leaders each year by March 1 of the availability of residual information.
(b) BIA shall use the residual information determined under subparagraph (a) as the basis for negotiating with individual Tribes.
(c) In accordance with the appeals procedures in subpart R of this part, if BIA and a participating Tribe/Consortium disagree over the content of residual functions or amounts, Tribe/Consortium can appeal as shown in the following table.

| If a Tribe/Consortium . . . | the Tribe/Consortium may . . . | and . . . |
|---|---|---|
| (1) Disagrees with BIA's determination | appeal to the Deputy Commissioner | the Deputy Commissioner must make a written determination within 30 days of receiving the request. |
| (2) Disagrees with the Deputy Commissioner's determination. | appeal to the Assistant Secretary—Indian Affairs. | the Assistant Secretary's determination is final for the Department. |

(d) Information on residual functions may be amended if programs are added or deleted, if statutory or final judicial determinations mandate or if the Deputy Commissioner makes a determination that would alter the residual information or funding amounts. The decision may be appealed to the Assistant Secretary in accordance with subpart R of this part. The Assistant Secretary shall make a written determination within 30 days.

**§ 1000.96 May a Tribe/Consortium continue to negotiate an AFA pending an appeal of residual functions or amounts?**

Yes, pending appeal of a residual function or amount, any Tribe/Consortium may continue to negotiate an AFA using the residual information that is being appealed. The residual information will be subject to later adjustment based on the final determination of a Tribe's/Consortium's appeal.

**§ 1000.97 What is a Tribal share?**

A Tribal share is the amount determined for a particular Tribe/Consortium for a particular program at BIA regional, agency and central office levels under section 403(g)(3) and 405(d) of the Act.

**§ 1000.98 How does BIA determine a Tribe's/Consortium's share of funds to be included in an AFA?**

There are typically two methods for determining the amount of funds to be included in the AFA:
(a) *Formula-driven.* For formula-driven programs, a Tribe's/Consortium's amount is determined by first identifying the residual funds to be retained by BIA and second, by applying the distribution formula to the remaining eligible funding for each program involved.
(1) Distribution formulas must be reasonably related to the function or service performed by an office, and must be consistently applied to all Tribes within each regional and agency office.
(2) The process in paragraph (a) of this section for calculating a Tribe's funding under self-governance must be consistent with the process used for calculating funds available to non-self-governance Tribes.
(b) *Tribal-specific.* For programs whose funds are not distributed on a formula basis as described in paragraph (a) of this section, a Tribe's funding amount will be determined on a Tribe-by-Tribe basis and may differ between Tribes. Examples of these funds may include special project funding, awarded competitive grants, earmarked funding, and construction or other one-time or non-recurring funding for which a Tribe is eligible.

**§ 1000.99 Can a Tribe/Consortium negotiate a Tribal share for programs outside its region/agency?**

Yes, where BIA services for a particular Tribe/Consortium are provided from a location outside its immediate agency or region, the Tribe may negotiate its share from BIA location where the service is actually provided.

**§ 1000.100 May a Tribe/Consortium obtain discretionary or competitive funding that is distributed on a discretionary or competitive basis?**

Funds provided for Indian services/programs that have not been mandated by Congress to be distributed on a competitive/discretionary basis may be distributed to a Tribe/Consortium under a formula-driven method. In order to receive such funds, a Tribe/Consortium must be eligible and qualified to receive

such funds. A Tribe/Consortium that receives such funds under a formula-driven methodology would no longer be eligible to compete for these funds.

**§ 1000.101 Are all funds identified as Tribal shares always paid to the Tribe/Consortium under an AFA?**

No, at the discretion of the Tribe/Consortium, Tribal shares may be left, in whole or in part, with BIA for certain programs. This is referred to as a ''retained Tribal share''.

**§ 1000.102 How are savings that result from downsizing allocated?**

Funds that are saved as a result of downsizing in BIA are allocated to Tribes/Consortia in the same manner as Tribal shares as provided for in § 1000.98.

**§ 1000.103 Do Tribes/Consortia need Secretarial approval to reallocate funds between programs that the Tribe/Consortium administers under the AFA?**

No, unless otherwise required by law, the Secretary does not have to approve the reallocation of funds between programs that a Tribe/Consortium administers under an AFA.

**§ 1000.104 Can funding amounts negotiated in an AFA be adjusted during the year it is in effect?**

Yes, funding amounts negotiated in an AFA may be adjusted under the following circumstances:

(a) *Congressional action.* (1) Increases/decreases as a result of Congressional appropriations and/or a directive in the statement of managers accompanying a conference report on an appropriations bill or continuing resolution.

(2) General decreases due to Congressional action must be applied consistently to BIA, self-governance Tribes/Consortia, and Tribes/Consortia not participating in self-governance.

(3) General increases due to Congressional appropriations must be applied consistently, except where used to achieve equitable distribution among regions and Tribes.

(4) A Tribe/Consortium will be notified of any decrease and be provided an opportunity to reconcile.

(b) *Mistakes.* If the Tribe/Consortium or the Secretary can identify and document substantive errors in calculations, the parties will renegotiate the amounts and make every effort to correct such errors.

(c) *Mutual Agreement.* Both the Tribe/Consortium and the Secretary may agree to renegotiate amounts at any time.

## Establishing Self-Governance Base Budgets

**§ 1000.105 What are self-governance base budgets?**

(a) A Tribe/Consortium self-governance base budget is the amount of recurring funding identified in the President's annual budget request to Congress. This amount must be adjusted to reflect subsequent Congressional action. It includes amounts that are eligible to be base transferred or have been base transferred from BIA budget accounts to self-governance budget accounts. As allowed by Congress, self-governance base budgets are derived from:

(1) A Tribe's/Consortium's Pub. L. 93–638 contract amounts;

(2) Negotiated agency, regional, and central office amounts;

(3) Other recurring funding;

(4) Special projects, if applicable;

(5) Programmatic shortfall;

(6) Tribal priority allocation increases and decreases;

(7) Pay costs and retirement cost adjustments; and

(8) Any other inflationary cost adjustments.

(b) Self-governance base budgets must not include any non-recurring program funds, construction and wildland firefighting accounts, Congressional earmarks, or other funds specifically excluded by Congress. These funds are negotiated annually and may be included in the AFA but must not be included in the self-governance base budget.

(c) Self-governance base budgets may not include other recurring type programs that are currently in Tribal priority allocations (TPA) such as general assistance, housing improvement program (HIP), road maintenance and contract support. Should these later four programs ever become base transferred to Tribes, then they may be included in a self-governance Tribe's base budget.

**§ 1000.106 Once a Tribe/Consortium establishes a base budget, are funding amounts renegotiated each year?**

No, unless otherwise requested by the Tribe/Consortium, these amounts are not renegotiated each year. If a Tribe/Consortium renegotiates funding levels:

(a) It must negotiate all funding levels in the AFA using the process for determining residuals and funding amounts on the same basis as other Tribes; and

(b) It is eligible for funding amounts of new programs or available programs not previously included in the AFA on the same basis as other Tribes.

**§ 1000.107 Must a Tribe/Consortium with a base budget or base budget-eligible program amounts negotiated before January 16, 2001 negotiate new Tribal shares and residual amounts?**

No, if a Tribe/Consortium negotiated amounts before January 16, 2001, it does not need to renegotiate new Tribal shares and residual amounts.

(a) At Tribal option, a Tribe/Consortium may retain funding amounts that:

(1) Were either base eligible or in the Tribe's base; and

(2) Were negotiated before this part is promulgated.

(b) If a Tribe/Consortium desires to renegotiate the amounts referred to in paragraph (a) of this section, the Tribe/Consortium must:

(1) Negotiate all funding included in the AFA; and

(2) Use the process for determining residuals and funding amounts on the same basis as other Tribes.

(c) Self-governance Tribes/Consortia are eligible for funding amounts for new or available programs not previously included in the AFA on the same basis as other Tribes/Consortia.

**§ 1000.108 How are self-governance base budgets established?**

At the request of the Tribe/Consortium, a self-governance base budget identifying each Tribe's funding amount is included in BIA's budget justification for the following year, subject to Congressional appropriation.

**§ 1000.109 How are self-governance base budgets adjusted?**

Self-governance base budgets must be adjusted as follows:

(a) *Congressional action.* (1) Increases/decreases as a result of Congressional appropriations and/or a directive in the statement of managers accompanying a conference report on an appropriations bill or continuing resolution.

(2) General decreases due to Congressional action must be applied consistently to BIA, self-governance Tribes/Consortia, and Tribes/Consortia not participating in self-governance.

(3) General increases due to Congressional appropriations must be applied consistently, except where used to achieve equitable distribution among regions and Tribes.

(4) A Tribe/Consortium will be notified of any decrease and be provided an opportunity to reconcile.

(b) *Mistakes.* If the Tribe/Consortium or the Secretary can identify and document substantive errors in calculations, the parties will renegotiate such amounts and make every effort to correct the errors.

(c) *Mutual agreement.* Both the Tribe/Consortium and the Secretary may agree to renegotiate amounts at any time.

## Subpart F—Non-BIA Annual Self-Governance Compacts and Funding Agreements

### Purpose

#### § 1000.120 What is the purpose of this subpart?

This subpart describes program eligibility, funding, terms, and conditions of AFAs for non-BIA programs.

#### § 1000.121 What is an annual funding agreement for a non-BIA program?

Annual funding agreements for non-BIA programs are legally binding and mutually enforceable agreements between a bureau and a Tribe/Consortium participating in the self-governance program that contain:

(a) A description of that portion or portions of a bureau program that are to be performed by the Tribe/Consortium; and

(b) Associated funding, terms and conditions under which the Tribe/Consortium will assume a program, or portion of a program.

### Eligibility

#### § 1000.122 What non-BIA programs are eligible for inclusion in an annual funding agreement?

Programs authorized by sections 403(b)(2) and 403(c) of the Act are eligible for inclusion in AFAs. The Secretary will publish annually a list of these programs in accordance with section 405(c)(4).

#### § 1000.123 Are there non-BIA programs for which the Secretary must negotiate for inclusion in an AFA subject to such terms as the parties may negotiate?

Yes, those programs, or portions thereof, that are eligible for contracting under Pub. L. 93–638.

#### § 1000.124 What programs are included under Section 403(b)(2) of the Act?

Those programs, or portions thereof, that are eligible for contracting under Pub. L. 93–638.

#### § 1000.125 What programs are included under Section 403(c)?

Department of the Interior programs of special geographic, historical, or cultural significance to participating Tribes, individually or as members of a Consortium, are eligible for inclusion in AFAs under section 403(c).

#### § 1000.126 What does ''special geographic, historical or cultural'' mean?

(a) *Geographic* generally refers to all lands presently ''on or near'' an Indian reservation, and all other lands within ''Indian country,'' as defined by 18 U.S.C. 1151. In addition, ''geographic'' includes:

(1) Lands of former reservations;

(2) Lands on or near those conveyed or to be conveyed under the Alaska Native Claims Settlement Act (ANCSA);

(3) Judicially established aboriginal lands of a Tribe or a Consortium member or as verified by the Secretary; and

(4) Lands and waters pertaining to Indian rights in natural resources, hunting, fishing, gathering, and subsistence activities, provided or protected by treaty or other applicable law.

(b) *Historical* generally refers to programs or lands having a particular history that is relevant to the Tribe. For example, particular trails, forts, significant sites, or educational activities that relate to the history of a particular Tribe.

(c) *Cultural* refers to programs, sites, or activities as defined by individual Tribal traditions and may include, for example:

(1) Sacred and medicinal sites;

(2) Gathering of medicines or materials such as grasses for basket weaving; or

(3) Other traditional activities, including, but not limited to, subsistence hunting, fishing, and gathering.

#### § 1000.127 Under Section 403(b)(2), when must programs be awarded non-competitively?

Programs eligible for contracts under Pub. L. 93–638 must be awarded non-competitively.

#### § 1000.128 Is there a contracting preference for programs of special geographic, historical, or cultural significance?

Yes, if there is a special geographic, historical, or cultural significance to the program or activity administered by the bureau, the law affords the bureau the discretion to include the programs or activities in an AFA on a non-competitive basis.

#### § 1000.129 Are there any programs that may not be included in an AFA?

Yes, section 403(k) of the Act excludes from the program:

(a) Inherently Federal functions; and

(b) Programs where the statute establishing the existing program does not authorize the type of participation sought by the Tribe/Consortium, except as provided in § 1000.134.

#### § 1000.130 Does a Tribe/Consortium need to be identified in an authorizing statute in order for a program or element of a program to be included in a non-BIA AFA?

No, the Act favors the inclusion of a wide range of programs.

#### § 1000.131 Will Tribes/Consortia participate in the Secretary's determination of what is to be included on the annual list of available programs?

Yes, the Secretary must consult each year with Tribes/Consortia participating in self-governance programs regarding which bureau programs are eligible for inclusion in AFAs.

#### § 1000.132 How will the Secretary consult with Tribes/Consortia in developing the list of available programs?

(a) On, or as near as possible to, October 1 of each year, the Secretary must distribute to each participating self-governance Tribe/Consortium the previous year's list of available programs in accordance with section 405(c)(4) of the Act. The list must include:

(1) All of the Secretary's proposed additions and revisions for the coming year with an explanation; and

(2) Programmatic targets and an initial point of contact for each bureau.

(b) The Tribes/Consortia receiving the proposed list will have 30 days from receipt to comment in writing on the Secretary's proposed revisions and to provide additions and revisions of their own for the Secretary to consider.

(c) The Secretary will carefully consider these comments before publishing the list as required by section 405(c)(4) of the Act.

(d) If the Secretary does not plan to include a Tribal suggestion or revision in the final published list, he/she must provide an explanation of his/her reasons if requested by a Tribe.

#### § 1000.133 What else is on the list in addition to eligible programs?

The list will also include programmatic targets and an initial point of contact for each bureau. Programmatic targets will be established as part of the consultation process described in § 1000.132.

#### § 1000.134 May a bureau negotiate with a Tribe/Consortium for programs not specifically included on the annual section 405(c) list?

Yes, the annual list will specify that bureaus will negotiate for other programs eligible under section 403(b)(2) when requested by a Tribe/Consortium. Bureaus may negotiate for section 403(c) programs whether or not they are on the list.

**§ 1000.135 How will a bureau negotiate an annual funding agreement for a program of special geographic, historical, or cultural significance to more than one Tribe?**

(a) If a program is of special geographic, historical, or cultural significance to more than one Tribe, the bureau may allocate the program among the several Tribes/Consortia or select one Tribe/Consortium with whom to negotiate an AFA.

(b) In making a determination under paragraph (a) of this section, the bureau will, in consultation with the affected Tribes, consider:

(1) The special significance of each Tribe's or Consortium member's interest; and

(2) The statutory objectives being served by the bureau program.

(c) The bureau's decision will be final for the Department.

**§ 1000.136 When will this determination be made?**

It will occur during the pre-negotiation process, subject to the timeframes in § 1000.171 and § 1000.172.

## Funding

**§ 1000.137 What funds are included in an AFA?**

Bureaus determine the amount of funding to be included in the AFA using the following principles:

(a) *403(b)(2) programs.* In general, funds are provided in an AFA to the Tribe/Consortium in an amount equal to the amount that it is eligible to receive under section 106 of Pub. L. 93–638.

(b) *403(c) programs.* (1) The AFA will include:

(i) Amounts equal to the direct costs the bureau would have incurred were it to operate that program at the level of work mutually agreed to in the AFA; and

(ii) Allowable indirect costs.

(2) A bureau is not required to include management and support funds from the regional or central office level in an AFA, unless:

(i) The Tribe/Consortium will perform work previously performed at the regional or central office level;

(ii) The work is not compensated in the indirect cost rate; and

(iii) Including management and support costs in the AFA does not result in the Tribe/Consortium being paid twice for the same work when negotiated indirect cost rate is applied.

(c) *Funding Limitations.* The amount of funding must be subject to the availability and level of Congressional appropriations to the bureau for that program or activity. As the various bureaus use somewhat differing budgeting practices, determining the amount of funds available for inclusion in the AFA for a particular program or activity is likely to vary among bureaus or programs.

(1) The AFA may not exceed the amount of funding the bureau would have spent for direct operations and indirect support and management of that program in that year.

(2) The AFA must not include funding for programs still performed by the bureau.

**§ 1000.138 How are indirect cost rates determined?**

The Department's Office of the Inspector General (OIG) or other cognizant Federal agency and the Tribe/Consortium negotiate indirect cost rates. These rates are based on the provisions of the Office of Management and Budget (OMB) Circular A–87 or other applicable OMB cost circular and the provisions of Title I of Pub. L. 93–638 (See § 1000.142). These rates are used generally by all Federal agencies for contracts and grants with the Tribe/Consortium, including self-governance agreements.

**§ 1000.139 Will the established indirect cost rates always apply to new AFAs?**

No, the established indirect cost rates will not always apply to new AFAs.

(a) A Tribe's/Consortium's existing indirect cost rate should be reviewed and renegotiated with the inspector general or other cognizant agency if:

(1) Using the previously negotiated rate would include the recovery of indirect costs that are not reasonable, allocable, or allowable to the relevant program; or

(2) The previously negotiated rate would result in an under-recovery by the Tribe/Consortium.

(b) If a Tribe/Consortium has a fixed amount indirect cost agreement under OMB Circular A–87, then:

(1) Renegotiation is not required and the duration of the fixed amount agreement will be that provided for in the fixed amount agreement; or

(2) The Tribe/Consortium and bureau may negotiate an indirect cost amount or rate for use only in that AFA without the involvement of the inspector general or other cognizant agency.

**§ 1000.140 How does the Secretary determine the amount of indirect contract support costs?**

The Secretary determines the amount of indirect contract support costs by:

(a) Applying the negotiated indirect cost rate to the appropriate direct cost base;

(b) Using the provisional rate; or

(c) Negotiating the amount of indirect contract support.

**§ 1000.141 Is there a predetermined cap or limit on indirect cost rates or a fixed formula for calculating indirect cost rates?**

No, indirect cost rates vary from Tribe to Tribe. The Secretary should refer to the appropriate negotiated indirect cost rates for individual Tribes, that apply government-wide. Although this cost rate is not capped, the amount of funds available for inclusion is capped at the level available under the relevant appropriation.

**§ 1000.142 Instead of the negotiated indirect cost rate, is it possible to establish a fixed amount or another negotiated rate for indirect costs where funds are limited?**

Yes, OMB Circular A–87 encourages agencies to test fee-for-service alternatives. If the parties agree to a fixed price, fee-for-service agreement, then they must use OMB Circular A–87 as a guide in determining the appropriate price (OMB circulars are available at http://www.whitehouse.gov/omb/ or see 5 CFR 1310.3).Where limited appropriated funds are available, negotiating the fixed cost option or another rate may facilitate reaching an agreement with that Tribe/Consortium.

## Other Terms and Conditions

**§ 1000.143 May the bureaus negotiate terms to be included in an AFA for non-Indian programs?**

Yes, as provided for by section 403(b)(2) and 403(c) and as necessary to meet program mandates.

## Reallocation, Duration, and Amendments

**§ 1000.144 Can a Tribe reallocate funds for a non-BIA non-Indian program?**

Yes, section 403(b) permits such reallocation upon joint agreement of the Secretary and the Tribe/Consortium.

**§ 1000.145 Do Tribes/Consortia need Secretarial approval to reallocate funds between Title-I eligible programs that the Tribe/Consortium administers under a non-BIA AFA?**

No, unless otherwise required by law, the Secretary does not have to approve the reallocation of funds with the exception of construction projects.

**§ 1000.146 Can a Tribe/Consortium negotiate an AFA with a non-BIA bureau for which the performance period exceeds one year?**

Yes, subject to the terms of the AFA, a Tribe/Consortium and a non-BIA bureau may agree to provide for the performance under the AFA to extend beyond the fiscal year. However, the

Department may not obligate funds in excess and advance of available appropriations.

### § 1000.147 Can the terms and conditions in a non-BIA AFA be amended during the year it is in effect?

Yes, terms and conditions in a non-BIA AFA may be amended during the year it is in effect as agreed to by both the Tribe/Consortium and the Secretary.

### § 1000.148 What happens if an AFA expires before the effective date of the successor AFA?

If the effective date of a successor AFA is not on or before the expiration of the current AFA, subject to terms mutually agreed upon by the Tribe/Consortium and the Department at the time the current AFA was negotiated or in a subsequent amendment, the Tribe/Consortium may continue to carry out the program authorized under the AFA to the extent resources permit. During this extension period, the current AFA shall remain in effect, including coverage of the Tribe/Consortium under the Federal Tort Claims Act (FTCA) 28 U.S.C. 2671–2680 (1994); and the Tribe/Consortium may use any funds remaining under the AFA, savings from other programs or Tribal funds to carry out the program. Nothing in this section authorizes an AFA to be continued beyond the completion of the program authorized under the AFA or the amended AFA. This section also does not entitle a Tribe/Consortium to receive, nor does it prevent a Tribe from receiving, additional funding under any successor AFA. The successor AFA must provide funding to the Tribe/Consortium at a level necessary for the Tribe/Consortium to perform the programs, functions, services, and activities (PFSA) or portions thereof for the full period they were or will be performed.

## Subpart G—Negotiation Process for Annual Funding Agreements

### Purpose

### § 1000.160 What is the purpose of this subpart?

This subpart provides the process and timelines for negotiating a self-governance compact with the Department and an AFA with any bureau.

(a) For a newly selected or currently participating Tribe/Consortium negotiating an initial AFA with any bureau, see §§ 1000.173 through 1000.179.

(b) For a participating Tribe/Consortium negotiating a successor AFA with any bureau, see §§ 1000.180 through 1000.182.

### Negotiating a Self-Governance Compact

### § 1000.161 What is a self-governance compact?

A self-governance compact is an executed document that affirms the government-to-government relationship between a self-governance Tribe and the United States. The compact differs from an AFA in that parts of the compact apply to all bureaus within the Department of the Interior rather than a single bureau.

### § 1000.162 What is included in a self-governance compact?

A model format for self-governance compacts appears in appendix A. A self-governance compact should generally include the following:

(a) The authority and purpose;

(b) Terms, provisions, and conditions of the compact;

(c) Obligations of the Tribe and the United States; and

(d) Other provisions.

### § 1000.163 Can a Tribe/Consortium negotiate other terms and conditions not contained in the model compact?

Yes, the Secretary and a self-governance Tribe/Consortium may negotiate into the model compact contained in appendix A additional terms relating to the government-to-government relationship between the Tribe(s) and the United States. For BIA programs, a Tribe/Consortium and the Secretary may agree to include any term in a contract and funding agreement under Title I in the model compact contained in appendix A to this part.

### § 1000.164 Can a Tribe/Consortium have an AFA without entering into a compact?

Yes, at the Tribe's/Consortium's option.

### § 1000.165 Are provisions in compacts negotiated before January 16, 2001, effective after implementation?

(a) Yes, all provisions in compacts that were negotiated with BIA before January 16, 2001, shall remain in effect for BIA programs only after January 16, 2001, provided that each compact contains provisions:

(1) That are authorized by the Tribal Self-Governance Act of 1994;

(2) Are in compliance with other applicable Federal laws; and,

(3) Are consistent with this part.

(b) BIA will notify the Tribe/Consortium in writing when BIA asserts that a provision or provisions of that Tribe's/Consortium's previously negotiated compact is not in compliance with the terms and conditions of this part. BIA and the Tribe/Consortium will renegotiate the provision within 60 days of the Tribe's/Consortium's receipt of the notification.

(c) If renegotiation is not successful within 60 days of the notice being provided, BIA's determination is final for the bureau and enforceability of the provisions shall be subject to the appeals process described in subpart R of this part. Pending a final appeal through the appeals process, BIA's determination shall be stayed.

### Negotiation of Initial Annual Funding Agreements

### § 1000.166 What are the phases of the negotiation process?

There are two phases of the negotiation process:

(a) The information phase; and

(b) The negotiation phase.

### § 1000.167 Who may initiate the information phase?

Any Tribe/Consortium that has been admitted to the program or to the applicant pool may initiate the information phase.

### § 1000.168 Is it mandatory to go through the information phase before initiating the negotiation phase?

No, a Tribe/Consortium may go directly to the negotiation phase.

### § 1000.169 How does a Tribe/Consortium initiate the information phase?

A Tribe/Consortium initiates the information phase by submitting a letter of interest to the bureau administering a program that the Tribe/Consortium may want to include in its AFA. A letter of interest may be mailed, telefaxed, or hand-delivered to:

(a) The Director, OSG, if the request is for information about BIA programs;

(b) The non-BIA bureau's self-governance representative identified in the Secretary's annual section 405(c) listing in the **Federal Register**, if the request is for information concerning programs of non-BIA bureaus.

### § 1000.170 What is the letter of interest?

A letter of interest is the initial indication of interest submitted by the Tribe/Consortium informing the bureau of the Tribe's/Consortium's interest in seeking information for the possible negotiation of one or more bureau programs. For non-BIA bureaus, the program and budget information request should relate to the program and activities identified in the Secretary's section 405(c) list in the **Federal Register** or a section 403(c) request. A letter of interest should identify the following:

(a) As specifically as possible, the program a Tribe/Consortium is interested in negotiating under an AFA;

(b) A preliminary brief explanation of the cultural, historical, or geographic significance to the Tribe/Consortium of the program, if applicable;

(c) The scope of activity that a Tribe/Consortium is interested in including in an AFA;

(d) Other information that may assist the bureau in identifying the programs that are included or related to the Tribe's/Consortium's request;

(e) A request for information that indicates the type and/or description of information that will assist the Tribe/Consortium in pursuing the negotiation process;

(f) A designated Tribal contact;

(g) A request for information on any funds that may be available within the bureau or other known possible sources of funding for planning and negotiating an AFA;

(h) A request for information on any funds available within the bureau or from other sources of funding that the Tribe/Consortium may include in the AFA for planning or performing programs or activities; and

(i) Any requests for technical assistance to be provided by the bureau in preparing documents of materials that may be required for the Tribe/Consortium in the negotiation process.

**§ 1000.171 When should a Tribe/Consortium submit a letter of interest?**

A letter of interest may be submitted at any time. To meet the negotiation deadlines below, letters should be submitted to the appropriate non-BIA bureaus by March 1; letters should be submitted to BIA by April 1 for fiscal year Tribes/Consortia or May 1 for calendar year Tribes/Consortia.

**§ 1000.172 What steps does the bureau take after a letter of interest is submitted by a Tribe/Consortium?**

(a) Within 15 calendar days of receipt of a Tribe's/Consortium's letter of interest, the bureau will notify the Tribe/Consortium about who will be designated as the bureau's representative to be responsible for responding to the Tribal requests for information. The bureau representative shall act in good faith in fulfilling the following responsibilities:

(1) Providing all budget and program information identified in paragraph (b) of this section, from each organizational level of the bureau(s); and

(2) Notifying any other bureau requiring notification and participation under this part.

(b) Within 30 calendar days of receipt of the Tribe's/Consortium's letter of interest:

(1) To the extent that such reasonably related information is available, the bureau representative is to provide the information listed in paragraph (c) of this section, if available and consistent with the bureau's budgetary process;

(2) A written explanation of why the information is not available or not being provided to the Tribe's/Consortium's contact and the date by which other available information will be provided; or

(3) If applicable, a written explanation of why the program is unavailable for negotiation.

(c) Information to be made available to the Tribe's/Consortium's contact, subject to the conditions of paragraph (b) of this section, includes:

(1) Information regarding program, budget, staffing, and locations of the offices administering the program and related administrative support program identified by the Tribe/Consortium,

(2) Information contained in the previous year, present year, and next year's budget proposed by the President at the national program level and the regional/local level.

(3) When appropriate, the bureau will be available to meet the Tribal representatives to explain the budget information provided.

(4) Information used to support budget allocations for the programs identified (e.g., full time equivalents and other relevant factors).

(5) Information used to operate and/or evaluate a program, such as statutory and regulatory requirements and program standards.

(6) If applicable, information regarding how a program is administered by more than one bureau, including a point of contact for information for the other bureau(s); and

(7) Other information requested by the Tribe/Consortium in its letter of interest.

(d) If a bureau fails to provide reasonably related information requested by a Tribe/Consortium, the Tribe/Consortium may appeal the failure in accordance with subpart R of this part. These requests shall be considered for a fee waiver under the Freedom of Information Act.

**§ 1000.173 How does a newly selected Tribe/Consortium initiate the negotiation phase?**

(a) To initiate the negotiation phase, an authorized official of the newly selected Tribe/Consortium submits a written request to negotiate an AFA as indicated in the following table:

| For a . . . | the Tribe/Consortium should submit the request to . . . | and the request should identify . . . |
|---|---|---|
| (1) BIA program | the Director, OSG. | the lead negotiator(s) for the Tribe/Consortium. |
| (2) Non-BIA program | the bureau representative designated to respond to the Tribe's/Consortium's request for information. | the lead negotiator(s) for the Tribe/Consortium and the specific program(s) that the Tribe/Consortium seeks to negotiate. |

(b) The Tribal/Consortium official must submit the information required by paragraph (a) of this section by the deadline shown in the following table:

| Type of program | Type of tribe/consortium | Submission deadline |
|---|---|---|
| (1) BIA | Fiscal year | April 1. |
| (2) BIA | Calendar year | May 1. |
| (3) Non-BIA | Fiscal year or calendar year | May 1*. |

* The request may be submitted later than this date where the bureau and the Tribe/Consortium agree that administration for a partial year funding agreement is feasible.

**§ 1000.174 How and when does the bureau respond to a request to negotiate?**

(a) Within 15 days of receiving a Tribe's/Consortium's request to negotiate, the bureau will take the steps in this section. If more than one bureau is involved, a lead bureau must be designated to conduct negotiations.

(b) If the program is contained on the section 405(c) list, the bureau will identify the lead negotiator(s) and awarding official(s) for executing the AFA.

(c) If the program is potentially of a special geographic, cultural, or historic significance to a Tribe/Consortium, the bureau will schedule a pre-negotiation meeting with the Tribe/Consortium as soon as possible. The purpose of the meeting is to assist the bureau in determining if the program is available for negotiation.

(d) Within 10 days after convening a meeting under paragraph (c) of this section:

(1) If the program is available for negotiation, the bureau will identify the lead negotiator(s) and awarding official(s); or

(2) If the program is unavailable for negotiation, the bureau will give to the Tribe/Consortium a written explanation of why the program is unavailable for negotiation.

**§ 1000.175 What is the process for conducting the negotiation phase?**

(a) Within 30 days of receiving a written request to negotiate, the bureau and the Tribe/Consortium will agree to a date to conduct an initial negotiation meeting. Subsequent meetings will be held with reasonable frequency at reasonable times.

(b) Tribe/Consortium and bureau lead negotiators must:

(1) Be authorized to negotiate on behalf of their government; and

(2) Involve all necessary persons in the negotiation process.

(c) Once negotiations have been successfully completed, the bureau and Tribe/Consortium will prepare and either execute or disapprove an AFA within 30 days or by a mutually agreed upon date.

**§ 1000.176 What issues must the bureau and the Tribe/Consortium address at negotiation meetings?**

The negotiation meetings referred to in § 1000.175 must address at a minimum the following:

(a) The specific Tribe/Consortium proposal(s) and intentions;

(b) Legal or program issues that the bureau or the Tribe/Consortium identify as concerns;

(c) Options for negotiating programs and related budget amounts, including mutually agreeable options for developing alternative formats for presenting budget information to the Tribe/Consortium;

(d) Dates for conducting and concluding negotiations;

(e) Protocols for conducting negotiations;

(f) Responsibility for preparation of a written summary of the discussions; and

(g) Who will prepare an initial draft of the AFA.

**§ 1000.177 What happens when the AFA is signed?**

(a) After all parties have signed the AFA, a copy is sent to the Tribe/Consortium.

(b) The Secretary forwards copies of the AFA to:

(1) The House Subcommittee on Native Americans and Insular Affairs; and

(2) The Senate Committee on Indian Affairs;

(c) For BIA programs, the AFA is also forwarded to each Indian Tribe/Consortium served by the BIA Agency that serves any Tribe/Consortium that is a party to the AFA.

**§ 1000.178 When does the AFA become effective?**

The effective date is not earlier than 90 days after the AFA is submitted to the Congressional committees under § 1000.177(b).

**§ 1000.179 What happens if the Tribe/Consortium and bureau negotiators fail to reach an agreement?**

(a) If the Tribe/Consortium and bureau representatives do not reach agreement during the negotiation phase by the mutually agreed to date for completing negotiations, the Tribe/Consortium and the bureau may each make a last and best offer to the other party.

(b) If a last and best offer is not accepted within 15 days, the bureau will provide a written explanation to the Tribe/Consortium explaining its reasons for not entering into an AFA for the requested program, together with the applicable statement prescribed in subpart R of this part, concerning appeal or review rights.

(c) The Tribe/Consortium has 30 days from receipt of the bureau's written explanation to file an appeal. Appeals are handled in accordance with subpart R of this part.

## Negotiation Process for Successor Annual Funding Agreements

**§ 1000.180 What is a successor AFA?**

A successor AFA is a funding agreement negotiated after a Tribe's/Consortium's initial agreement with a bureau for continuing to perform a particular program. The parties to the AFA should generally use the terms of the existing AFA to expedite and simplify the exchange of information and the negotiation process.

**§ 1000.181 How does the Tribe/Consortium initiate the negotiation of a successor AFA?**

Although a written request is desirable to document the precise request and date of the request, a written request is not mandatory. If either party anticipates a significant change in an existing program in the AFA, it should notify the other party of the change at the earliest possible date so that the other party may plan accordingly.

**§ 1000.182 What is the process for negotiating a successor AFA?**

The Tribe/Consortium and the bureau use the procedures in §§ 1000.173—1000.179.

## Subpart H—Limitation and/or Reduction of BIA Services, Contracts, and Funds

**§ 1000.190 What is the purpose of this subpart?**

This subpart prescribes the process that the Secretary uses to determine whether a BIA self-governance funding agreement causes a limitation or reduction in the services, contracts, or funds that any other Tribe/Consortium or Tribal organization is eligible to receive under self-determination contracts, other self-governance compacts, or direct services from BIA. This type of limitation is prohibited by section 406(a) of Pub. L. 93–638. For the purposes of this subpart, Tribal organization means an organization eligible to receive services, contracts, or funds under section 102 of Pub. L. 93–638.

**§ 1000.191 To whom does this subpart apply?**

Participating and non-participating Tribes/Consortia and Tribal organizations are subject to this subpart. It does not apply to the general public and non-Indians.

**§ 1000.192 What services, contracts, or funds are protected under section 406(a)?**

Section 406(a) protects against the actual reduction or limitations of services, contracts, or funds.

**§ 1000.193 Who may raise the issue of limitation or reduction of services, contracts, or funding?**

BIA or any affected Tribe/Consortium or Tribal organization may raise the issue that a BIA self-governance AFA

limits or reduces particular services, contracts, or funding for which it is eligible.

**§ 1000.194 When must BIA raise the issue of limitation or reduction of services, contracts, or funding?**

(a) From the beginning of the negotiation period until the end of the first year of implementation of an AFA, BIA may raise the issue of limitation or reduction of services, contracts, or funding. If BIA and a participating Tribe/Consortium disagree over the residual information, a participating Tribe/Consortium may ask the Deputy Commissioner—Indian Affairs to reconsider residual levels for particular programs. [See § 1000.95(d)]

(b) After the AFA is signed, BIA must raise the issue of any undetermined funding amounts within 30 days after the final funding level is determined. BIA may not raise this issue after this period has elapsed.

**§ 1000.195 When must an affected Tribe/Consortium or Tribal organization raise the issue of a limitation or reduction of services, contracts, or funding for which it is eligible?**

(a) A Tribe/Consortium or Tribal organization may raise the issue of limitation or reduction of services, contracts, or funding for which it is eligible during:

(1) Region-wide Tribal shares meetings occurring before the first year of implementation of an AFA;

(2) Within the 90-day review period before the effective date of the AFA; and

(3) The first year of implementation of an AFA.

(b) Any Tribe/Consortium or Tribal organization claiming a limitation or reduction of contracts, services, or funding for which it is eligible must notify, in writing, both the Department and negotiating Tribe/Consortium. Claims may only be filed within the periods specified in paragraph (a) of this section.

**§ 1000.196 What must be included in a finding by BIA or in a claim by an affected Tribe/Consortium or Tribal organization regarding the issue of a limitation or reduction of services?**

An affected Tribe/Consortium must include in its claim a written explanation identifying the alleged limitation or reduction of services, contracts, or funding for which it is eligible. A finding by BIA must likewise identify the limitation or reduction.

**§ 1000.197 How will BIA resolve a claim?**

All findings and claims timely made in accordance with §§ 1000.194 through 1000.195 will be resolved in accordance with 25 CFR part 2.

**§ 1000.198 How must a limitation or reduction in services, contracts, or funds be remedied?**

(a) If funding a participating Tribe/Consortium will limit or reduce services, contracts, or funds for which another Tribe/Consortium or Tribal organization is eligible, BIA must remedy the reduction as follows:

(1) In the current AFA year BIA must use shortfall funding, supplemental funding, or other available BIA resources; and

(2) In a subsequent AFA year, BIA may adjust the AFA funding in an AFA to correct a finding of actual reduction in services, contracts, or funds for that subsequent year.

(b) All adjustments under this section must be mutually agreed between BIA and the participating Tribe/Consortium.

## Subpart I—Public Consultation Process

**§ 1000.210 When does a non-BIA bureau use a public consultation process related to the negotiation of an AFA?**

When required by law or when appropriate under bureau discretion, a bureau may use a public consultation process in negotiating an AFA.

**§ 1000.211 Will the bureau contact the Tribe/Consortium before initiating public consultation process for a non-BIA AFA under negotiation?**

Yes, the bureau and the Tribe/Consortium will discuss the consultation process to be used in negotiating a non-BIA AFA.

(a) When public consultation is required by law, the bureau will follow the required process and will involve the Tribe/Consortium in that process to the maximum extent possible.

(b) When public consultation is a matter of bureau discretion, at Tribal request the Tribe/Consortium and the bureau, unless prohibited by law, will jointly develop guidelines for that process, including the conduct of any future public meetings. The bureau and the Tribe/Consortium will jointly identify a list of potential project beneficiaries, third-party stakeholders, or third-party users (affected parties) for use in the public consultation process.

**§ 1000.212 What is the role of the Tribe/Consortium when a bureau initiates a public meeting?**

When a bureau initiates a public meeting with affected parties it will take the following actions:

(a) The bureau will notify the Tribe/Consortium of the meeting time, place, and invited parties:

(1) Ten days in advance, if possible; or

(2) If less than 10 days in advance, at the earliest practical time.

(b) When the bureau notifies the Tribe/Consortium, the bureau will invite the Tribe/Consortium to participate in and, unless prohibited by law, to co-sponsor or co-facilitate the meeting.

(c) When possible, the bureau and the Tribe/Consortium should meet to plan and discuss the conduct of the meeting, meeting protocols, and general participation in the proposed consultation meeting.

(d) The bureau and the Tribe/Consortium will conduct the meeting in a manner that facilitates and does not undermine the government-to-government relationship and self-governance;

(e) The Tribe/Consortium may provide technical support to the bureau to enhance the consultation process, as mutually agreed.

**§ 1000.213 What should the bureau do if it is invited to attend a meeting with respect to the Tribe's/Consortium's proposed AFA?**

If the bureau is invited to participate in meetings, hearings, etc., held or conducted by other parties, where the subject matter of the AFA under negotiation is expected to be raised, the bureau:

(a) Shall notify the Tribe/Consortium at the earliest practical time; and

(b) Should encourage the meeting sponsor to invite the Tribe/Consortium to participate.

**§ 1000.214 Will the bureau and the Tribe/Consortium share information concerning inquiries about the Tribes/Consortia and the AFA?**

Yes, the bureau and the Tribe/Consortium will exchange information about inquiries from affected or interested parties relating to the AFA under negotiation.

## Subpart J—Waiver of Regulations

**§ 1000.220 What regulations apply to self-governance Tribes?**

All regulations that govern the operation of programs included in an AFA apply unless waived under this subpart. To the maximum extent practical, the parties should identify these regulations in the AFA.

**§ 1000.221 Can the Secretary grant a waiver of regulations to a Tribe/Consortium?**

Yes, a Tribe/Consortium may ask the Secretary to grant a waiver of some or all Department of the Interior regulation(s) applicable to a program, in whole or in part, operated by a Tribe/Consortium under an AFA.

**§ 1000.222 How does a Tribe/Consortium obtain a waiver?**

To obtain a waiver, the Tribe/Consortium must:

(a) Submit a written request from the designated Tribal official to the Director for BIA programs or the appropriate bureau/office director for non-BIA programs;

(b) Identify the regulation to be waived and the reasons for the request;

(c) Identify the programs to which the waiver would apply;

(d) Identify what provisions, if any, would be substituted in the AFA for the regulation to be waived; and

(e) When applicable, identify the effect of the waiver on any trust programs or resources.

**§ 1000.223 When can a Tribe/Consortium request a waiver of a regulation?**

A Tribe/Consortium may request a waiver of a regulation:

(a) As part of the negotiation process; or

(b) After an AFA has been executed.

**§ 1000.224 How can a Tribe/Consortium expedite the review of a regulation waiver request?**

A Tribe/Consortium may request a meeting or other informal discussion with the appropriate bureau officials before submitting a waiver request.

(a) To set up a meeting, the Tribe/Consortium should contact:

(1) For BIA programs, the Director, OSG; or

(2) For non-BIA programs, the designated representative of the bureau.

(b) The meeting or discussion is intended to provide:

(1) A clear understanding of the nature of the request;

(2) Necessary background and information; and

(3) An opportunity for the bureau to offer appropriate technical assistance.

**§ 1000.225 Are meetings or discussions mandatory?**

No, a meeting with the bureau officials is not necessary to submit a waiver request.

**§ 1000.226 On what basis may the Secretary deny a waiver request?**

The Secretary may deny a waiver request if:

(a) For a Title-I-eligible program, the requested waiver is prohibited by Federal law; or

(b) For a non-Title-I-eligible program, the requested waiver is:

(1) Prohibited by Federal law; or

(2) Inconsistent with the express provisions of the AFA.

**§ 1000.227 What happens if the Secretary denies the waiver request?**

If the Secretary denies a waiver request, the Secretary issues a written decision stating:

(a) The basis for the decision;

(b) The decision is final for the Department; and

(c) The Tribe/Consortium may request reconsideration of the denial.

**§ 1000.228 What are examples of waivers prohibited by law?**

Examples of when a waiver is prohibited by Federal law include:

(a) When the effect would be to waive or eliminate express statutory requirements;

(b) When a statute authorizes civil and criminal penalties;

(c) When it would result in a failure to ensure that proper health and safety standards are included in an AFA (section 403(e)(2));

(d) When it would result in a reduction of the level of trust services that would have been provided by the Secretary to individual Indians (section 403(g)(4));

(e) When it would limit or reduce the services, contracts, or funds to any other Indian Tribe or Tribal organization (section 406(a));

(f) When it would diminish the Federal trust responsibility to Tribes, individual Indians or Indians with trust allotments (Section 406(b)); or

(g) When it would violate Federal case law.

**§ 1000.229 May a Tribe/Consortium propose a substitute for a regulation it wishes to be waived?**

Yes, where a Tribe/Consortium wishes to replace the waived regulation with a substitute that otherwise maintains the requirements of the applicable Federal law, the Secretary may be able to approve the waiver request. The Tribe/Consortium and bureau officials must negotiate to develop a suggested substitution.

**§ 1000.230 How is a waiver approval documented for the record?**

The waiver decision is made part of the AFA by attaching a copy of it to the AFA and by mutually executing any necessary conforming amendments to the AFA. The decisions announcing the waiver also will be posted on the Office of Self-Governance web site and all such decisions shall be made available on request.

**§ 1000.231 How does a Tribe/Consortium request reconsideration of the Secretary's denial of a waiver?**

(a) The Tribe/Consortium may request reconsideration of a waiver denial. To do so, the Tribe/Consortium must submit a request to:

(1) The Director, OSG, for BIA programs; or

(2) The appropriate bureau head, for non-BIA programs.

(b) The request must be filed within 30 days of the day the decision is received by certified mail (return receipt requested) or by hand delivery. A request submitted by mail will be considered filed on the postmark date.

(c) The request must identify the issues to be addressed, including a statement of reasons supporting the request.

**§ 1000.232 When must DOI respond to a request for reconsideration?**

The Secretary must issue a written decision within 30 days of the Department's receipt of a request for reconsideration. This decision is final for the Department and no administrative appeal may be made.

## Subpart K—Construction

**§ 1000.240 What construction programs included in an AFA are subject to this subpart?**

(a) All BIA and non-BIA construction programs included in an AFA are subject to this subpart. This includes design, construction, repair, improvement, expansion, replacement or demolition of buildings or facilities, and other related work for Federal, or Federally funded Tribal, facilities and projects.

(b) The following programs and activities are not construction programs and activities:

(1) Activities limited to providing planning services, administrative support services, coordination, responsibility for the construction project, day-to-day on-site management on site-management and administration of the project, which may include cost management, project budgeting, project scheduling and procurement except that all project design and actual construction activities are subject to all the requirements of subpart K, whether performed by a Tribe/Consortium, subcontractor, or consultant.

(2) Housing Improvement Program or road maintenance program activities of BIA;

(3) Operation and maintenance programs; and

(4) Non-403(c) programs that are less than $100,000, subject to section 403(e)(2) of the Act, other applicable Federal law, and § 1000.256 of this subpart.

**§ 1000.241 Does this subpart create an agency relationship?**

No, a BIA or non-BIA construction program does not automatically create

an agency relationship. However, Federal law, provisions of an AFA, or Federal actions may create an agency relationship.

**§ 1000.242 What provisions relating to a construction program may be included in an AFA?**

The Secretary and the Tribe/Consortium may negotiate to apply specific provisions of the Office of Federal Procurement and Policy Act and Federal Acquisition Regulations to a construction part of an AFA. Absent a negotiated agreement, such provisions and regulatory requirements do not apply.

**§ 1000.243 What special provisions must be included in an AFA that contains a construction program?**

An AFA that contains a construction program must address the requirements listed in this section.

(a) The AFA must specify how the Secretary and the Tribe/Consortium must ensure that proper health and safety standards are provided for in the implementation of the AFA, including but not limited to:

(1) The use of architects and engineers licensed to perform the type of construction involved in the AFA;

(2) Applicable Federal, state, local or Tribal building codes and applicable engineering standards, appropriate for the particular project; and

(3) Necessary inspections and testing by the Tribe.

(b) The AFA must comply with applicable Federal laws, program statutes and regulations.

(c) The AFA must specify the services to be provided, the work to be performed, and the responsibilities of the Tribe/Consortium and the Secretary under the AFA.

(d) The Secretary may require the Tribe/Consortium to provide brief progress reports and financial status reports. The parties may negotiate in the AFA the frequency, format and content of the reporting requirement. As negotiated, these reports may include:

(1) A narrative of the work accomplished;

(2) The percentage of the work completed;

(3) A report of funds expended during the reporting period; and

(4) The total funds expended for the project.

**§ 1000.244 May the Secretary suspend construction activities under an AFA?**

(a) The Secretary may require a Tribe/Consortium to suspend certain work under a construction portion of an AFA for up to 30 days only if:

(1) Site conditions adversely affect health and safety; or

(2) Work in progress or completed fails to substantially carry out the terms of the AFA without good cause.

(b) The Secretary may suspend only work directly related to the criteria specified in paragraph (a) of this section unless other reasons for suspension are specifically negotiated in the AFA.

(c) Unless the Secretary determines that a health and safety emergency requiring immediate action exists, before suspending work the Secretary must provide:

(1) A 5 working days written notice; and

(2) An opportunity for the Tribe/Consortium to correct the problem.

(d) The Tribe/Consortium must be compensated for reasonable costs due to any suspension of work that occurred through no fault of the Tribe/Consortium. Project funds will not be used for this purpose. However, if suspension occurs due to the action or inaction of the Tribe/Consortium, then project funds will be used to cover suspension related activities.

**§ 1000.245 May a Tribe/Consortium continue work with construction funds remaining in an AFA at the end of the funding year?**

Yes, any funds remaining in an AFA at the end of the funding year may be spent for construction under the terms of the AFA.

**§ 1000.246 Must an AFA that contains a construction project or activity incorporate provisions of Federal construction standards?**

No, the Secretary may provide information about Federal standards as early as possible in the construction process. If Tribal construction standards are consistent with or exceed applicable Federal standards, then the Secretary must accept the Indian Tribe/Consortium's proposed standards. The Secretary may accept commonly accepted industry construction standards.

**§ 1000.247 May the Secretary require design provisions and other terms and conditions for construction programs or activities included in an AFA under section 403(c) of the Act?**

Yes, the relevant bureau may provide to the Tribe/Consortium project design criteria and other terms and conditions that are required for such a project. The project must be completed in accordance with the terms and conditions set forth in the AFA.

**§ 1000.248 What is the Tribe's/Consortium's role in a construction program included in an AFA?**

The Tribe/Consortium has the following role regarding a construction portion of an AFA:

(a) Under the Act, the Indian Tribe/Consortium must successfully complete the project in accordance with the terms and conditions in the AFA.

(b) The Tribe/Consortium must give the Secretary timely notice of any proposed changes to the project that require an increase to the negotiated funding amount or an increase in the negotiated performance period or any other significant departure from the scope or objective of the project. The Tribe/Consortium and Secretary may negotiate to include timely notice requirements in the AFA.

**§ 1000.249 What is the Secretary's role in a construction program in an AFA?**

The Secretary has the following role regarding a construction program contained in an AFA:

(a) Except as provided in § 1000.256, the Secretary may review and approve planning and design documents in accordance with terms negotiated in the AFA to ensure health and safety standards and compliance with Federal law and other program mandates;

(b) Unless otherwise agreed to in an AFA, the Secretary reserves a royalty-free, nonexclusive, and irrevocable license to reproduce, publish, or otherwise use for Federal Government purposes, designs produced in the construction program that are funded by AFA monies, including:

(1) The copyright to any work developed under a contract or subcontract; and

(2) Any rights of copyright that an Indian Tribe/Consortium or a Tribal contractor purchases through the AFA;

(c) The Secretary may conduct on-site monitoring visits as negotiated in the AFA;

(d) The Secretary must approve any proposed changes in the construction program or activity that require an increase in the negotiated AFA funding amount or an increase in the negotiated performance period or are a significant departure from the scope or objective of the construction program as agreed to in the AFA;

(e) The Secretary may conduct final project inspection jointly with the Indian Tribe/Consortium and may accept the construction project or activity as negotiated in the AFA;

(f) Where the Secretary and the Tribe/Consortium share construction program activities, the AFA may provide for the exchange of information;

(g) The Secretary may reassume the construction portion of an AFA if there is a finding of:

(1) A significant failure to substantially carry out the terms of the AFA without good cause; or

(2) Imminent jeopardy to a physical trust asset, to a natural resource, or that adversely affects public health and safety as provided in subpart M of this part.

**§ 1000.250 How are property and funding returned if there is a reassumption for substantial failure to carry out an AFA?**

If there is a reassumption for substantial failure to carry out an AFA, property and funding will be returned as provided in subparts M and N of this part.

**§ 1000.251 What happens when a Tribe/Consortium is suspended for substantial failure to carry out the terms of an AFA without good cause and does not correct the failure during the suspension?**

(a) Except when the Secretary makes a finding of imminent jeopardy to a physical trust asset, a natural resource, or public health and safety as provided in subpart M of these regulations a finding of substantial failure to carry out the terms of the AFA without good cause must be processed under the suspension of work provision of § 1000.244.

(b) If the substantial failure to carry out the terms of the AFA without good cause is not corrected or resolved during the suspension of work, the Secretary may initiate a reassumption at the end of the 30-day suspension of work if an extension has not been negotiated. Any unresolved dispute will be processed in accordance with the Contract Disputes Act of 1978, 41 U.S.C. 601, *et seq.*

**§ 1000.252 Do all provisions of other subparts apply to construction portions of AFAs?**

Yes, all provisions of other subparts apply to construction portions of AFAs unless those provisions are inconsistent with this subpart.

**§ 1000.253 When a Tribe withdraws from a Consortium, is the Secretary required to award to the withdrawing Tribe a portion of funds associated with a construction project if the withdrawing Tribe so requests?**

Under § 1000.35 of this part, a Tribe may withdraw from a Consortium and request its portion of a construction project's funds. The Secretary may decide not to award these funds if the award will affect the Consortium's ability to complete a non-severable phase of the project within available funding. An example of a non-severable phase of a project would be the construction of a single building serving all members of the Consortium. An example of a severable phase of a project would be the funding for a road in one village where the Consortium would be able to complete the roads in the other villages that were part of the project approved initially in the AFA. The Secretary's decision under this section may be appealed under subpart R of this part.

**§ 1000.254 May a Tribe/Consortium reallocate funds from a construction program to a non-construction program?**

No, a Tribe/Consortium may not reallocate funds from a construction program to a non-construction program unless otherwise provided under the relevant appropriation acts.

**§ 1000.255 May a Tribe/Consortium reallocate funds among construction programs?**

Yes, a Tribe/Consortium may reallocate funds among construction programs if permitted by appropriation law or if approved in advance by the Secretary.

**§ 1000.256 Must the Secretary retain project funds to ensure proper health and safety standards in construction projects?**

Yes, the Secretary must retain project funds to ensure proper health and safety standards in construction projects. Examples of purposes for which bureaus may retain funds include:

(a) Determining or approving appropriate construction standards to be used in AFAs;

(b) Verifying that there is an adequate Tribal inspection system utilizing licensed professionals;

(c) Providing for sufficient monitoring of design and construction by the Secretary; and

(d) Requiring corrective action during performance when appropriate.

## Subpart L—Federal Tort Claims

**§ 1000.270 What does this subpart cover?**

This subpart explains the applicability of the Federal Tort Claims Act (FTCA). This section covers:

(a) Coverage of claims arising out of the performance of functions under Self-Governance AFA's; and

(b) Procedures for filing claims under FTCA.

**§ 1000.271 What other statutes and regulations apply to FTCA coverage?**

A number of other statutes and regulations apply to FTCA coverage, including the Federal Tort Claims Act (28 U.S.C. 1346(b), 2401, 2671–2680) and related Department of Justice regulations in 28 CFR part 14.

**§ 1000.272 Do Tribes/Consortia need to be aware of areas which FTCA does not cover?**

Yes, there are claims against Self-Governance Tribes/Consortia which are not covered by FTCA, claims which may not be pursued under FTCA, and remedies that are excluded by FTCA. The following general guidance is not intended as a definitive description of coverage, which is subject to review by the Department of Justice and the courts on a case-by-case basis.

(a) What claims are expressly barred by FTCA and therefore may not be made against the United States, a Tribe or Consortium? Any claim under 28 U.S.C. 2680, including claims arising out of assault, battery, false imprisonment, false arrest, malicious prosecution, abuse of process, libel, slander, misrepresentation, deceit, or interference with contract rights, unless otherwise authorized by 28 U.S.C. 2680(h).

(b) What claims may not be pursued under FTCA?

(1) Claims against subcontractors arising out of the performance of subcontracts with a Self-Governance Tribe/Consortium;

(2) Claims for on-the-job injuries which are covered by workmen's compensation;

(3) Claims for breach of contract rather than tort claims; or

(4) Claims resulting from activities performed by an employee which are outside the scope of employment.

(c) What remedies are expressly excluded by FTCA and therefore are barred?

(1) Punitive damages, unless otherwise authorized by 28 U.S.C. 2674; and (2) Other remedies not permitted under applicable state law.

**§ 1000.273 Is there a deadline for filing FTCA claims?**

Yes, claims shall be filed within 2 years of the date of accrual. (28 U.S.C. 2401).

**§ 1000.274 How long does the Federal government have to process a FTCA claim after the claim is received by the Federal agency, before a lawsuit may be filed?**

The Federal government has 6 months to process a FTCA claim after the claim is received by the Federal agency, before a lawsuit may be filed.

**§ 1000.275 Is it necessary for a self-governance AFA to include any clauses about FTCA coverage?**

No, clauses about FTCA coverage are optional. At the request of Tribes/Consortia, self-governance AFA's shall include the following clause to clarify the scope of FTCA coverage:

For purposes of Federal Tort Claims Act coverage, the Tribe/Consortium and its employees (including individuals performing personal services contracts with the tribe/consortium) are deemed to be employees of the Federal government while performing work under this AFA. This status is not changed by the source of the funds used by the Tribe/Consortium to pay the employee's salary and benefits unless the employee receives additional compensation for performing covered services from anyone other than the Tribe/Consortium.

**§ 1000.276 Does FTCA apply to a self-governance AFA if FTCA is not referenced in the AFA?**

Yes, FTCA applies even if the AFA does not mention it.

**§ 1000.277 To what extent shall the Tribe/Consortium cooperate with the Federal government in connection with tort claims arising out of the Tribe's/Consortium's performance?**

(a) The Tribe/Consortium shall designate an individual to serve as tort claims liaison with the Federal government.

(b) As part of the notification required by 28 U.S.C. 2679(c), the Tribe/Consortium shall notify the Secretary immediately in writing of any tort claim (including any proceeding before an administrative agency or court) filed against the Tribe/Consortium or any of its employees that relates to performance of a self-governance AFA or subcontract.

(c) The Tribe/Consortium, through its designated tort claims liaison, shall assist the appropriate Federal agency in preparing a comprehensive, accurate, and unbiased report of the incident so that the claim may be properly evaluated. This report should be completed within 60 days of notification of the filing of the tort claim. The report should be complete in every significant detail and include as appropriate:

(1) The date, time and exact place of the accident or incident;

(2) A concise and complete statement of the circumstances of the accident or incident;

(3) The names and addresses of Tribal and/or Federal employees involved as participants or witnesses;

(4) The names and addresses of all other eyewitnesses;

(5) An accurate description of all government and other privately-owned property involved and the nature and amount of damage, if any;

(6) A statement as to whether any person involved was cited for violating a Federal, State or tribal law, ordinance, or regulation;

(7) The Tribe's/Consortium's determination as to whether any of its employees (including Federal employees assigned to the Tribe/Consortium) involved in the incident giving rise to the tort claim were acting within the scope of their employment in carrying out the contract at the time the incident occurred;

(8) Copies of all relevant documentation, including available police reports, statements of witnesses, newspaper accounts, weather reports, plats and photographs of the site or damaged property, such as may be necessary or useful for purposes of claim determination by the Federal agency; and

(9) Insurance coverage information, copies of medical bills, and relevant employment records.

(d) The Tribe/Consortium shall cooperate with and provide assistance to the U.S. Department of Justice attorneys assigned to defend the tort claim, including, but not limited to, case preparation, discovery, and trial.

(e) If requested by the Secretary, the Tribe/Consortium shall make an assignment and subrogation of all the Tribe's/Consortium's rights and claims (except those against the Federal government) arising out of a tort claim against the Tribe/Consortium.

(f) If requested by the Secretary, the Tribe/Consortium shall authorize representatives of the Secretary to settle or defend any claim and to represent the Tribe/Consortium in or take charge of any action.

(g) If the Federal government undertakes the settlement or defense of any claim or action, the Tribe/Consortium shall provide all reasonable additional assistance in reaching a settlement or asserting a defense.

**§ 1000.278 Does this coverage extend to subcontractors of self-governance AFAs?**

No, subcontractors or subgrantees providing services to a Pub. L. 93–638 Tribe/Consortium are generally not covered.

**§ 1000.279 Is FTCA the exclusive remedy for a tort claim, including a claim concerning personal injury or death, resulting from the performance of a self-governance AFA?**

Yes, except as explained in § 1000.272(b). No claim may be filed against a self-governance Tribe/Consortium or employee based upon performance of functions under a self-governance AFA. All claims shall be filed against the United States and are subject to the limitations and restrictions of FTCA.

**§ 1000.280 What employees are covered by FTCA for medical-related claims?**

The following employees are covered by FTCA for medical-related claims:

(a) Permanent employees;

(b) Temporary employees;

(c) Persons providing services without compensation in carrying out a contract;

(d) Persons required because of their employment by a self-governance Tribe/Consortium to serve non-IHS beneficiaries (even if the services are provided in facilities not owned by the Tribe/Consortium; and,

(e) Federal employees assigned to the AFA.

**§ 1000.281 Does FTCA cover employees of the Tribe/Consortium who are paid by the Tribe/Consortium from funds other than those provided through the self-governance AFA?**

Yes, FTCA covers employees of the Tribe/Consortium who are not paid from AFA funds as long as the services out of which the claim arose were performed in carrying out the self-governance AFA.

**§ 1000.282 May persons who are not Indians or Alaska Natives assert claims under FTCA?**

Yes, non-Indian individuals served under the self-governance AFA, may assert claims under this Subpart.

**§ 1000.283 If the Tribe/Consortium or Tribe's/Consortium's employee receives a summons and/or a complaint alleging a tort covered by FTCA, what should the Tribe/Consortium do?**

As part of the notification required by 28 U.S.C. 2679(c), if the Tribe/Consortium or Tribe's/Consortium's employee receives a summons and/or complaint alleging a tort covered by FTCA, the Tribe/Consortium should immediately:

(a) Inform the Assistant Solicitor, Procurement and Patents, Office of the Solicitor, Department of the Interior, Room 6511, 1849 C Street NW., Washington, DC 20240,

(b) Inform the Tribe's/Consortium's tort claims liaison, and

(c) Forward all of the materials identified in § 1000.277(c) to the contacts given in § 1000.283 (a) and (b).

## Subpart M—Reassumption

**§ 1000.300 What is the purpose of this subpart?**

This subpart explains when the Secretary can reassume a program without the consent of a Tribe/Consortium.

**§ 1000.301 When may the Secretary reassume a Federal program operated by a Tribe/Consortium under an AFA?**

The Secretary may reassume any Federal program operated by a Tribe/Consortium upon a finding of imminent jeopardy to:

(a) A physical trust asset;

(b) A natural resource; or

(c) Public health and safety.

**§ 1000.302 ''What is imminent jeopardy'' to a trust asset?**

Imminent jeopardy means an immediate threat and likelihood of significant devaluation, degradation, damage, or loss of a trust asset, or the intended benefit from the asset caused by the actions or inactions of a Tribe/Consortium in performing trust functions. This includes disregarding Federal trust standards and/or Federal law while performing trust functions if the disregard creates such an immediate threat.

**§ 1000.303 What is imminent jeopardy to natural resources?**

The standard for natural resources is the same as for a physical trust asset, except that a review for compliance with the specific mandatory statutory provisions related to the program as reflected in the funding agreement must also be considered.

**§ 1000.304 What is imminent jeopardy to public health and safety?**

Imminent jeopardy to public health and safety means an immediate and significant threat of serious harm to human well-being, including conditions that may result in serious injury, or death, caused by Tribal action or inaction or as otherwise provided in an AFA.

**§ 1000.305 In an imminent jeopardy situation, what must the Secretary do?**

In an imminent jeopardy situation, the Secretary must:

(a) The Secretary must immediately notify the Tribe/Consortium in writing following discovery of imminent jeopardy; or

(b) If there is an immediate threat to human health, safety, or welfare, the Secretary may immediately reassume operation of the program regardless of the timeframes specified in this subpart.

**§ 1000.306 Must the Secretary always reassume a program, upon a finding of imminent jeopardy?**

Yes, the Secretary must reassume a program within 60 days of a finding of imminent jeopardy, unless the Secretary's designated representative determines that the Tribe/Consortium is able to mitigate the conditions.

**§ 1000.307 What happens if the Secretary's designated representative determines that the Tribe/Consortium cannot mitigate the conditions within 60 days?**

The Secretary will proceed with the reassumption in accordance with this subpart by sending the Tribe/Consortium a written notice of the Secretary's intent to reassume.

**§ 1000.308 What will the notice of reassumption include?**

The notice of reassumption under § 1000.307 will include all of the following items. In addition, if resources are available, the Secretary may offer technical assistance to mitigate the imminent jeopardy.

(a) A statement of the reasons supporting the Secretary's finding.

(b) To the extent practical, a description of specific measures that must be taken by the Tribe/Consortium to eliminate imminent jeopardy.

(c) A notice that funds for the management of the trust asset, natural resource, or public health and safety found to be in imminent jeopardy may not be reallocated or otherwise transferred without the Secretary's written consent.

(d) A notice of intent to invoke the return of property provision of the AFA.

(e) The effective date of the reassumption if the Tribe/Consortium does not eliminate the imminent jeopardy. If the deadline is less than 60 days after the date of receipt, the Secretary must include a justification.

(f) The amount of funds, if any, that the Secretary believes the Tribe/Consortium should refund to the Department for operation of the reassumed program. This amount cannot exceed the amount provided for that program under the AFA and must be based on such factors as the time or functions remaining in the funding cycle.

**§ 1000.309 How much time will a Tribe/Consortium have to respond to a notice of imminent jeopardy?**

The Tribe/Consortium will have 5 days to respond to a notice of imminent jeopardy. The response must be written and may be mailed, telefaxed, or sent by electronic mail. If sent by mail, it must be sent by certified mail, return receipt requested; the postmark date will be considered the date of response.

**§ 1000.310 What information must the Tribe's/Consortium's response contain?**

(a) The Tribe's/Consortium's response must indicate the specific measures that the Tribe/Consortium will take to eliminate the finding of imminent jeopardy.

(b) If the Tribe/Consortium proposes mitigating actions different from those prescribed in the Secretary's notice of imminent jeopardy, the response must explain the reasons for deviating from the Secretary's recommendations and how the proposed actions will eliminate imminent jeopardy.

**§ 1000.311 How will the Secretary reply to the Tribe's/Consortium's response?**

The Secretary will make a written determination within 10 days of the Tribe's/Consortium's written response as to whether the proposed measures will eliminate the finding of imminent jeopardy.

**§ 1000.312 What happens if the Secretary accepts the Tribe's/Consortium's proposed measures?**

The Secretary must notify the Tribe/Consortium in writing of the acceptance and suspend the reassumption process.

**§ 1000.313 What happens if the Secretary does not accept the Tribe's/Consortium's proposed measures?**

(a) If the Secretary finds that the Tribes/Consortia proposed measures will not mitigate imminent jeopardy, he/she will notify the Tribe/Consortium in writing of this determination and of the Tribe's/Consortium's right to appeal

(b) After the reassumption, the Secretary is responsible for the reassumed program, and will take appropriate corrective action to eliminate the imminent jeopardy which may include sending Department employees to the site.

**§ 1000.314 What must a Tribe/Consortium do when a program is reassumed?**

On the effective date of reassumption, the Tribe/Consortium must, at the request of the Secretary, deliver all property and equipment, and title thereto:

(a) That the Tribe/Consortium received for the program under the AFA; and

(b) That has a per item value in excess of $5,000, or as otherwise provided in the AFA.

**§ 1000.315 When must the Tribe/Consortium return funds to the Department?**

The Tribe/Consortium must repay funds to the Department as soon as practical after the effective date of the reassumption.

**§ 1000.316 May the Tribe/Consortium be reimbursed for actual and reasonable ''wind up costs'' incurred after the effective date of retrocession?**

Yes, the Tribe/Consortium may be reimbursed for actual and reasonable

''wind up costs'' to the extent that funds are available.

**§ 1000.317 Is a Tribe's/Consortium's general right to negotiate an AFA adversely affected by a reassumption action?**

A reassumption action taken by the Secretary does not affect the Tribe's/Consortium's ability to negotiate an AFA for programs not affected by the reassumption.

**§ 1000.318 When will the Secretary return management of a reassumed program?**

A reassumed program may be included in future AFAs, but the Secretary may include conditions in the terms of the AFA to ensure that the circumstances that caused jeopardy to attach do not reoccur.

## Subpart N—Retrocession

**§ 1000.330 What is the purpose of this subpart?**

This subpart explains what happens when a Tribe/Consortium voluntarily returns a program to a bureau.

**§ 1000.331 Is a decision by a Tribe/Consortium not to include a program in a successor agreement considered a retrocession?**

No, a decision by a Tribe/Consortium not to include a program in a successor agreement is not a retrocession because the Tribe/Consortium is under no obligation beyond an existing AFA.

**§ 1000.332 Who may retrocede a program in an AFA?**

A Tribe/Consortium may retrocede a program. However, the right of a Consortium member to retrocede may be subject to the terms of the agreement among the members of the Consortium.

**§ 1000.333 How does a Tribe/Consortium retrocede a program?**

The Tribe/Consortium must submit:

(a) A written notice to:

(1) The Office of Self-Governance for BIA programs; or

(2) The appropriate bureau for non-BIA programs; and

(b) A Tribal resolution or other official action of its governing body.

**§ 1000.334 When will the retrocession become effective?**

Unless subsequently rescinded by the Tribe/Consortium, a retrocession is only effective on a date mutually agreed upon by the Tribe/Consortium and the Secretary, or as provided in the AFA.

**§ 1000.335 How will retrocession affect the Tribe's/Consortium's existing and future AFAs?**

Retrocession does not affect other parts of the AFA or funding agreements with other bureaus. A Tribe/Consortium may request to negotiate for and include retroceded programs in future AFAs or through a self-determination contract.

**§ 1000.336 Does the Tribe/Consortium have to return funds used in the operation of a retroceded program?**

The Tribe/Consortium and the Secretary must negotiate the amount of funding to be returned to the Secretary for the operation of the retroceded program. This amount must be based on such factors as the time remaining or functions remaining in the funding cycle or as provided in the AFA.

**§ 1000.337 Does the Tribe/Consortium have to return property used in the operation of a retroceded program?**

On the effective date of any retrocession, the Tribe/Consortium must return all property and equipment, and title thereto:

(a) That was acquired under the AFA for the program being retroceded; and

(b) That has a per item value in excess of $5,000 at the time of the retrocession, or as otherwise provided in the AFA.

**§ 1000.338 What happens to a Tribe's/Consortium's mature contract status if it has retroceded a program that is also available for self-determination contracting?**

Retrocession has no effect on mature contract status, provided that the 3 most recent audits covering activities administered by the Tribe have no unresolved material audit exceptions.

**§ 1000.339 How does retrocession affect a bureau's operation of the retroceded program?**

The level of operation of the program will depend upon the amount of funding that is returned with the retrocession.

## Subpart O—Trust Evaluation Review

**§ 1000.350 What is the purpose of this subpart?**

This subpart describes how the trust responsibility of the United States is legally maintained through a system of trust evaluations when Tribes/Consortia perform trust functions through AFAs under the Tribal Self-Governance Act of 1994. It describes the principles and processes upon which trust evaluations will be based.

**§ 1000.351 Does the Tribal Self-Governance Act of 1994 alter the trust responsibility of the United States to Indian Tribes and individuals under self-governance?**

No, the Act does, however, permit a Tribe/Consortium to assume management responsibilities for trust assets and resources on its own behalf and on behalf of individual Indians. Under the Act, the Secretary has a trust responsibility to conduct annual trust evaluations of Tribal performance of trust functions to ensure that Tribal and individual trust assets and resources are managed in accordance with the legal principles and standards governing the performance of trust functions if trust assets or resources are found to be in imminent jeopardy.

**§ 1000.352 What are ''trust resources'' for the purposes of the trust evaluation process?**

(a) Trust resources include property and interests in property:

(1) That are held in trust by the United States for the benefit of a Tribe or individual Indians; or

(2) That are subject to restrictions upon alienation.

(b) Trust assets include:

(1) Other assets, trust revenue, royalties, or rental, including natural resources, land, water, minerals, funds, property, assets, or claims, and any intangible right or interest in any of the foregoing;

(2) Any other property, asset, or interest therein, or treaty right for which the United States is charged with a trust responsibility. For example, water rights and off-reservation treaty rights.

(c) This definition defines trust resources for purposes of the trust evaluation process only.

**§ 1000.353 What are ''trust functions'' for the purposes of the trust evaluation process?**

Trust functions are those programs necessary to the management of assets held in trust by the United States for an Indian Tribe or individual Indian.

### Annual Trust Evaluations

**§ 1000.354 What is a trust evaluation?**

A trust evaluation is an annual review and evaluation of trust functions performed by a Tribe/Consortium to ensure that the functions are performed in accordance with trust standards as defined by Federal law. Trust evaluations address trust functions performed by the Tribe/Consortium on its own behalf as well as trust functions performed by the Tribe/Consortium for the benefit of individual Indians or Alaska Natives.

**§ 1000.355 How are trust evaluations conducted?**

(a) Each year the Secretary's designated representative(s) will conduct trust evaluations for each self-governance AFA. The Secretary's designated representative(s) will coordinate with the designated Tribe's/Consortium's representative(s)

throughout the review process, including the written report required by § 1000.365.

(b) This section describes the general framework for trust reviews. However, each Tribe/Consortium may develop, with the appropriate bureau, an individualized trust evaluation process to allow for the Tribe's/Consortium's unique history and circumstances and the terms and conditions of its AFA. An individualized trust evaluation process must, at a minimum, contain the measures in paragraph (d) of this section.

(c) To facilitate the review process so as to mitigate costs and maximize efficiency, each Tribe/Consortium must provide access to all records, plans, and other pertinent documents relevant to the program(s) under review not otherwise available to the Department.

(d) The Secretary's designated representative(s) will:

(1) Review trust transactions;

(2) Conduct on-site inspections of trust resources, as appropriate;

(3) Review compliance with applicable statutory and regulatory requirements;

(4) Review compliance with the trust provisions of the AFA;

(5) Ensure that the same level of trust services is provided to individual Indians as would have been provided by the Secretary;

(6) Document deficiencies in the performance of trust functions discovered during the review process; and

(7) Ensure the fulfillment of the Secretary's trust responsibility to Tribes and individual Indians by documenting the existence of:

(i) Systems of internal controls;

(ii) Trust standards; and

(iii) Safeguards against conflicts of interest in the performance of trust functions.

(e) At the request of a Tribe/Consortium, at the time the AFA is negotiated, the standards will be negotiated, except where standards are otherwise provided for by law.

### § 1000.356 May the trust evaluation process be used for additional reviews?

Yes, if the parties agree.

### § 1000.357 May the parties negotiate standards of review for purposes of the trust evaluation?

Yes, unless standards are otherwise provided by Federal treaties, statutes, case law or regulations not waived, the Secretary's designated representative will negotiate standards of review at the request of the Tribe/Consortium.

### § 1000.358 Can an initial review of the status of the trust asset be conducted?

If the parties agree and it is practical, the Secretary may determine the status of the trust resource at the time of the transfer of the function or at a later time.

### § 1000.359 What are the responsibilities of the Secretary's designated representative(s) after the annual trust evaluation?

The Secretary's representative(s) must prepare a written report documenting the results of the trust evaluation.

(a) Upon Tribal/Consortium request, the representative(s) will provide the Tribal/Consortium representative(s) with a copy of the report for review and comment before finalization.

(b) The representative(s) will attach to the report any Tribal/Consortium comments that the representative does not accept.

### § 1000.360 Is the trust evaluation standard or process different when the trust asset is held in trust for an individual Indian or Indian allottee?

No, Tribes/Consortia are under the same obligation as the Secretary to perform trust functions and related activities in accordance with trust protection standards and principles whether managing Tribally or individually owned trust assets. The process for conducting annual trust evaluations of Tribal performance of trust functions on behalf of individual Indians is the same as that used in evaluating performance of Tribal trust functions.

### § 1000.361 Will the annual review include a review of the Secretary's residual trust functions?

Yes, if the annual evaluation reveals that deficient performance of a trust function is due to the action or inaction of a bureau, the evaluation report will note the deficiency and the appropriate Department official will be notified of the need for corrective action. The review of the Secretary's trust functions shall be based on the standards in this subpart, other applicable law, and other Federal law.

### § 1000.362 What are the consequences of a finding of imminent jeopardy in the annual trust evaluation?

(a) A finding of imminent jeopardy triggers the Federal reassumption process (see subpart M of this part), unless the conditions in paragraph (b) of this section are met.

(b) The reassumption process will not be triggered if the Secretary's designated representative determines that the Tribe/Consortium:

(1) Can cure the conditions causing jeopardy within 60 days; and

(2) Will not cause significant loss, harm, or devaluation of a trust asset, natural resources, or the public health and safety.

### § 1000.363 What if the trust evaluation reveals problems that do not rise to the level of imminent jeopardy?

Where problems not rising to the level of imminent jeopardy are caused by Tribal action or inaction, the conditions must be:

(a) Documented in the annual trust evaluation report;

(b) Reported to the Secretary; and

(c) Reported in writing to:

(1) The governing body of the Tribe; and

(2) In the case of a Consortium, to the governing body of each Tribe on whose behalf the Consortium is performing the trust functions.

### § 1000.364 Who is responsible for corrective action?

The Tribe/Consortium is primarily responsible for identifying and implementing corrective actions for matters contained in the AFA, but the Department may also suggest possible corrective measures for Tribal consideration.

### § 1000.365 What are the requirements of the review team report?

A report summarizing the results of the trust evaluation will be prepared and copies provided to the Tribe/Consortium. The report must:

(a) Be written objectively, concisely, and clearly; and

(b) Present information accurately and fairly, including only relevant and adequately supported information, findings, and conclusions.

### § 1000.366 Can the Department conduct more than one trust evaluation per Tribe per year?

Trust evaluations are normally conducted annually. When the Department receives information of a threat of imminent jeopardy to a trust asset, natural resource, or the public health and safety, the Secretary, as trustee, may conduct a preliminary investigation. If the preliminary investigation shows that appropriate, sufficient data are present to indicate there may be imminent jeopardy, the Secretary's designated representative:

(a) Will notify the Tribe/Consortium in writing; and

(b) May conduct an on-site inspection upon 2 days' advance written notice to the Tribe/Consortium.

**§ 1000.367 Will the Department evaluate a Tribe's/Consortium's performance of non-trust related programs?**

This depends on the terms contained in the AFA.

## Subpart P—Reports

**§ 1000.380 What is the purpose of this subpart?**

This subpart describes what reports are developed under self-governance.

**§ 1000.381 How is information about self-governance developed and reported?**

Annually, the Secretary will compile a report on self-governance for submission to the Congress. The report will be based on:

(a) Audit reports routinely submitted by Tribes/Consortia;

(b) The number of retrocessions requested by Tribes/Consortia in the reporting year;

(c) The number of reassumptions that occurred in the reporting year;

(d) Federal reductions-in-force and reorganizations resulting from self-governance activity;

(e) The type of residual functions and amount of residual funding retained by BIA; and

(f) An annual report submitted to the Secretary by each Tribe/Consortium as described in

**§ 1000.382 What may the Tribe's/Consortium's annual report on self-governance address?**

(a) The Tribe's/Consortium's annual self-governance report may address:

(1) A list of unmet Tribal needs in order of priority;

(2) The approved, year-end Tribal budget for the programs and services funded under self-governance, summarized and annotated as the Tribe may deem appropriate;

(3) Identification of any reallocation of trust programs;

(4) Program and service delivery highlights, which may include a narrative of specific program redesign or other accomplishments or benefits attributed to self-governance; and

(5) At the Tribe's/Consortium's option, a summary of the highlights of the report referred to in paragraph (a)(2) of this section and other pertinent information the Tribes may wish to report.

(b) The report submitted under this section is intended to provide the Department with information necessary to meet its Congressional reporting responsibilities and to fulfill its responsibility as an advocate for self-governance. The Tribal reporting requirement is not intended to be burdensome, and Tribes are encouraged to design and present the report in a brief and concise manner.

## Subpart Q—Miscellaneous Provisions

**§ 1000.390 How can a Tribe/Consortium hire a Federal employee to help implement an AFA?**

If a Tribe/Consortium chooses to hire a Federal employee, it can use one of the arrangements listed in this section:

(a) The Tribe can use its own Tribal personnel hiring procedures. Federal employees hired by the Tribe/Consortium are separated from Federal service.

(b) The Tribe can ''direct hire'' a Federal employee as a Tribal employee. The employee will be separated from Federal service and work for the Tribe/Consortium, but maintain a negotiated Federal benefit package that is paid for by the Tribe/Consortium out of AFA program funds; or

(c) The Tribe can negotiate an agreement under the Intergovernmental Personnel Act, 25 U.S.C. 48, or other applicable Federal law. The employee will remain a Federal employee during the term of the agreement.

**§ 1000.391 Can a Tribe/Consortium employee be detailed to a Federal service position?**

Yes, under the Intergovernmental Personnel Act, 25 U.S.C. 48, or other applicable law, when permitted by the Secretary.

**§ 1000.392 How does the Freedom of Information Act apply?**

(a) Access to records maintained by the Secretary is governed by the Freedom of Information Act (5 U.S.C. 552) and other applicable Federal law.

(b) At the option of the Tribe/Consortium under section 108 of the Pub. L. 93–638, except for previously provided copies of Tribe/Consortium records that the Secretary demonstrates are clearly required to be maintained as part of the record keeping system of the Department of the Interior, records of the Tribe/Consortium shall not be considered Federal records for the purpose of the Freedom of Information Act.

(c) The Freedom of Information Act does not apply to records maintained solely by Tribes/Consortia.

**§ 1000.393 How does the Privacy Act apply?**

At the option of the Tribe/Consortium, section 108(b) of Pub. L. 93–638, as amended, provides that records of the Tribe/Consortium must not be considered Federal records for the purposes of the Privacy Act.

**§ 1000.394 What audit requirements must a self-governance Tribe/Consortium follow?**

The Tribe/Consortium must provide to the designated official an annual single organization-wide audit as prescribed by the Single Audit Act of 1984, 31 U.S.C. 7501, *et seq.*

**§ 1000.395 Do OMB circulars and revisions apply to self-governance funding agreements?**

Yes, OMB circulars and revisions apply, except for:

(a) Listed exceptions for Tribes and Tribal Consortia;

(b) Exceptions in 25 U.S.C. 450j–1(k); and

(c) Additional exceptions that OMB may grant.

**§ 1000.396 Does a Tribe/Consortium have additional ongoing requirements to maintain minimum standards for Tribe/Consortium management systems?**

Yes, the Tribe/Consortium must maintain management systems that are determined to be adequate by an independent audit through the annual single agency audit report that is required by the Act and OMB Circular A–133.

**§ 1000.397 Are there any restrictions on how AFA funds may be spent?**

Yes, funds may be spent only for costs associated with programs, services, functions, and activities contained in self-governance AFAs.

**§ 1000.398 May a Tribe/Consortium invest funds received under a self-governance agreement?**

Yes, self-governance funds may be invested if such investment is in:

(a) Obligations of the United States;

(b) Obligations or securities that are within the limits guaranteed or insured by the United States or mutual (or other) funds registered with the Securities and Exchange Commission and that only invest in obligations of the United States or securities that are guaranteed or insured by the United States; or

(c) Deposits insured by an agency or instrumentality of the United States or are fully collateralized to ensure protection of the funds even in the event of a bank failure.

**§ 1000.399 How may interest or investment income that accrues on AFAs be used?**

Unless restricted by the AFA, interest or income earned on investments or deposits of self-governance awards may be:

(a) Placed in the Tribe's general fund and used for any purpose approved by the Tribe; or

(b) Used to provide expanded services under the self-governance AFA and to

support some or all of the costs of investment services.

**§ 1000.400 Can a Tribe/Consortium retain savings from programs?**

Yes, for BIA programs, the Tribe/Consortium may retain savings for each fiscal year during which an AFA is in effect. A Tribe/Consortium must use any savings that it realizes under an AFA, including a construction contract:

(a) To provide additional services or benefits under the AFA; or

(b) As carryover; and

(c) For purposes of this subpart only, programs administered by BIA using appropriations made to other Federal agencies, such as the Department of Transportation, will be treated in accordance with paragraph (b) of this section.

**§ 1000.401 Can a Tribe/Consortium carry over funds not spent during the term of the AFA?**

This section applies to BIA programs, services, functions, or activities, notwithstanding any other provision of law. Any funds appropriated under the Snyder Act of 1921 (42 Stat. 208), for any fiscal year that are not obligated or spent by the end of the fiscal year for which they were appropriated shall remain available for obligation or expenditure during the following fiscal year. In the case of amounts made available to a Tribe/Consortium under an AFA, if the funds are to be expended in the succeeding fiscal year for the purpose for which they were originally appropriated, contracted or granted, or for which they are authorized to be used under the provisions of § 106(a)(3) of the Act, no additional justification or documentation of such purposes need be provided by the Tribe/Consortium to the Secretary as a condition of receiving or expending such funds.

**§ 1000.402 After a non-BIA AFA has been executed and the funds transferred to a Tribe/Consortium, can a bureau request the return of funds?**

The bureau may request the return of funds already transferred to a Tribe/Consortium only under the following circumstances:

(a) Retrocession;

(b) Reassumption;

(c) Construction, when there are special legal requirements; or

(d) As otherwise provided for in the AFA.

**§ 1000.403 How can a person or group appeal a decision or contest an action related to a program operated by a Tribe/Consortium under an AFA?**

(a) *BIA programs.* A person or group who is aggrieved by an action of a Tribe/Consortium with respect to programs that are provided by the Tribe/Consortium under an AFA must follow Tribal administrative procedures.

(b) *Non-BIA programs.* Procedures will vary depending on the program. Aggrieved parties should initially contact the local program administrator (the Indian program contact). Thereafter, appeals will follow the relevant bureau's appeal procedures.

**§ 1000.404 Must self-governance Tribes/Consortia comply with the Secretarial approval requirements of 25 U.S.C. 81; 82a; and 476 regarding professional and attorney contracts?**

No, for the period that an agreement entered into under this part is in effect, the provisions of 25 U.S.C. 81, 82a, and 476, do not apply to attorney and other professional contracts by participating Tribes/Consortia.

**§ 1000.405 Are AFA funds non-Federal funds for the purpose of meeting matching requirements?**

Yes, self-governance AFA funds can be treated as non-Federal funding for the purpose of meeting matching requirements under Federal law.

**§ 1000.406 Does Indian preference apply to services, activities, programs, and functions performed under a self-governance AFA?**

Tribal law must govern Indian preference in employment, where permissible, in contracting and subcontracting in performance of an AFA.

**§ 1000.407 Do the wage and labor standards in the Davis-Bacon Act apply to Tribes and Tribal Consortia?**

No, wage and labor standards of the Davis-Bacon Act do not apply to employees of Tribes and Tribal Consortia. They do apply to all other laborers and mechanics employed by contractors and subcontractors in the construction, alteration, and repair (including painting or redecorating of buildings or other facilities) in connection with an AFA.

### Supply Sources

**§ 1000.408 Can a Tribe/Consortium use Federal supply sources in the performance of an AFA?**

A Tribe/Consortium and its employees may use Federal supply sources (including lodging, airline, interagency motor pool vehicles, and other means of transportation) that must be available to the Tribe/Consortium and to its employees to the same extent as if the Tribe/Consortium were a Federal agency. While implementation of this provision is the responsibility of the General Services Administration, the Department shall assist the Tribe/Consortium to resolve any barriers to full implementation that may arise. While implementation of this provision is the responsibility of the General Services Administration, the Department shall assist the Tribes/Consortia to resolve any barriers to full implementation that may arise to the fullest extent possible.

### Prompt Payment Act

**§ 1000.409 Does the Prompt Payment Act (31 U.S.C. 3901) apply to a non-BIA, non-Indian program AFA?**

Yes, upon mutual agreement of the parties, an AFA may incorporate the Prompt Payment Act.

## Subpart R—Appeals

**§ 1000.420 What does ''Title-I eligible programs'' mean in this subpart?**

Throughout this subpart, the phrase ''Title I-eligible programs'' is used to refer to all programs, functions, services, and activities that the Secretary provides for the benefit of Indians because of their status as Indians without regard to the agency or office of the Department within which the programs, functions, services, and activities have been performed.

**§ 1000.421 What is the purpose of this subpart?**

This subpart prescribes the process Tribes/Consortia may use to resolve disputes with the Department arising before or after execution of an AFA or compact and certain other disputes related to self-governance. It also describes the administrative process for reviewing disputes related to compact provisions. This subpart describes the process for administrative appeals to:

(a) The Interior Board of Indian Appeals (IBIA) for certain pre-AFA disputes;

(b) The Interior Board of Contract Appeals (IBCA) for certain post-AFA disputes;

(c) The Assistant Secretary for the bureau responsible for certain disputed decisions;

(d) The Secretary for reconsideration of decisions involving self-governance compacts; and

(e) The agency head for certain pre-award AFA disputes.

**§ 1000.422 How must disputes be handled?**

(a) The Department encourages its Bureaus to seek all means of dispute resolution before the Tribe/Consortium files a formal appeal(s).

(b) Disputes shall be addressed through government-to-government

discourse. This discourse must be respectful of government-to-government relationships and relevant Federal-Tribal agreements, treaties, judicial decisions, and policies pertaining to Indian Tribes.

(c) Title I-eligible program disputes may use an informal conference as set forth in 25 CFR 900.153–157.

(d) All disputes arising under this rule, including but not limited to Title I-eligible program disputes may use non-binding informal alternative dispute resolution at the option of the Tribe/Consortium, as prescribed in § 402 of this subpart. The Tribe/Consortium may ask for this alternative dispute resolution any time before the issuance of an initial decision of a formal appeal(s). The appeals timetable will be suspended while alternative dispute resolution is pending.

**§ 1000.423 Are there any decisions that are not administratively appealable under this subpart?**

Yes, the following types of decisions are not administratively appealable under this subpart but may be appealable under other substantive provisions of the Code of Federal Regulations:

(a) Decisions relating to planning and negotiation grants (subparts C and D of this part) and certain discretionary grants not awarded under Title IV (25 CFR part 2);

(b) Decisions involving a limitation and/or reduction of services for BIA programs (subpart H of this part)(25 CFR part 2);

(c) Decisions regarding requests for waivers of regulations (subpart J of this part);

(d) Decisions regarding construction (subpart K of this part) addressed in § 1000.251(b); and

(e) Decisions under any other statute, such as the Freedom of Information Act and the Privacy Act (see 43 CFR part 2).

**§ 1000.424 Does a Tribe/Consortium have a right to an informal conference to resolve any disputes?**

Yes, the Tribe/Consortium may request an informal conference (a non-binding alternative dispute resolution process). An informal conference is a way to resolve both Title I-eligible program and other disputes as quickly as possible, without the need for a formal appeal.

**§ 1000.425 How does a Tribe/Consortium request an informal conference?**

The Tribe/Consortium shall file its request for an informal conference with the office of the person whose decision it is appealing, within 30 days of the day it receives the decision.

(a) The Tribe/Consortium may either hand-deliver the request for an informal conference to that person's office, fax the request with confirmation or mail it by certified mail, return receipt requested.

(b) If the Tribe/Consortium mails the request, it will be considered filed on the date the Tribe/Consortium mailed it by certified mail.

**§ 1000.426 How is an informal conference held?**

For all purposes relating to these informal conference procedures, the parties are the designated representatives of the Tribe/Consortium and the bureau.

(a) The informal conference shall be held within 30 days of the date the request was received, unless the parties agree on another date.

(b) Where practicable, at the option of the Tribe/Consortium, the informal conference will be held at the Tribe's/Consortium's office. If the meeting cannot be held at the Tribe's/Consortium's office, the parties must agree on an alternative meeting place.

(c) The informal conference shall be conducted by a designated representative of the Secretary.

(d) Only the parties may make presentations at the informal conference.

(e) The informal conference is not a hearing on the record. Nothing said during an informal conference may be used by either party in litigation.

**§ 1000.427 What happens after the informal conference?**

(a) Within 10 business days of the informal conference, the person who conducted the informal conference shall mail to the Tribe/Consortium a brief summary of the informal conference. The summary must include any agreements reached or changes from the initial position of the bureau or the Tribe/Consortium.

(b) If in its judgment no agreement was reached, the Tribe/Consortium may choose to appeal the initial decision, as modified by any changes made as a result of the informal conference, under § 1000.421 of this subpart to the IBIA, bureau head/Assistant Secretary, or IBCA.

**§ 1000.428 How may a Tribe/Consortium appeal a decision made after the AFA or compact or amendment to an AFA or compact has been signed?**

With the exception of certain decisions concerning reassumption for imminent jeopardy (see § 1000.408 of this subpart), the Tribe/Consortium may appeal post-award administrative decisions to the IBCA.

**§ 1000.429 What statutes and regulations govern resolution of disputes concerning signed AFAs or compacts that are appealed to IBCA?**

Section 110 of Pub. L. 93–638 (25 U.S.C. 450 m–1) and the regulations at 25 CFR 900.216–900.230 apply to disputes concerning signed AFAs and compacts that are appealed to the IBCA, except that any references to the Department of Health and Human Services are inapplicable. For the purposes of such appeals:

(a) The terms ''contract'' and ''self-determination contract'' mean compacts and AFAs under the Tribal Self-Governance Act; and

(b) The term ''Tribe'' means ''Tribe/Consortium'.

**§ 1000.430 To whom are appeals directed regarding reassumption for imminent jeopardy?**

Appeals regarding reassumption of Title I-eligible PFSAs are handled by the IBIA under those procedures set out in 25 CFR 900.171 through 900.176. Appeals regarding reassumption of PFSAs that are not Title I-eligible are handled by the IBCA under those procedures set out in 43 CFR part 4.

**§ 1000.431 Does the Equal Access to Justice Act (EAJA) apply to appeals under this subpart?**

Yes, EAJA claims against the DOI will be heard by IBIA or IBCA, as appropriate, under 43 CFR 4.601 through 4.619, Equal Access to Justice Act (Pub. L. No. 96–481, 92 Stat. 2325, as amended), section 504 of Title 5 U.S.C. and Section 2412 of Title 28 U.S.C.

**§ 1000.432 To whom may a Tribe appeal a decision made before the AFA or an amendment to the AFA or compact is signed?**

(a) *Title I-eligible PFSA pre-award disputes.* For Title I—eligible PFSA disputes, appeal may only be filed with IBIA under the provisions set forth in 25 CFR 900.150(a) through (h), 900.152 through 900.169.

(b) *Other pre-award disputes.* For all other pre-award disputes, including those involving PFSAs that are not Title I-eligible, appeals may be filed with the bureau head/Assistant Secretary or IBIA as noted below. However, the Tribe/Consortium may not avail itself of both paths for the same dispute.

(1) *Bureau head/Assistant Secretary appeal.* Unless the initial decision being appealed is one that was made by the bureau head (those appeals are forwarded to the appropriate Assistant Secretary—see § 1000.433(c) of this subpart), the bureau head will decide appeals relating to these pre-award

matters, that include but are not limited to disputes regarding:

(i) PFSAs that are not Title 1-eligible;

(ii) Eligibility for the applicant pool of self-governance Tribes;

(iii) BIA residual functions;

(iv) Decisions declining to provide requested information as addressed in § 1000.172 of this part;

(v) Allocations of program funds when a dispute arises between a Consortium and a withdrawing Tribe; and

(vi) Inherently Federal functions.

(2) *IBIA appeal.* The Tribe/Consortium may choose to forego the administrative appeal through the bureau or the Assistant Secretary, as described in the paragraph (b)(1) of this section, and instead appeal directly to IBIA. The standard of review for such IBIA appeals will be an ''abuse of discretion'' standard.

**§ 1000.433 When and how must a Tribe/Consortium appeal an adverse pre-award decision?**

(a) If a Tribe/Consortium wishes to exercise its appeal rights under § 1000.432(b)(1), it must make a written request for review to the appropriate bureau head within 30 days of receiving the initial adverse decision. In addition, the Tribe/Consortium may request the opportunity to have a meeting with appropriate bureau personnel in an effort to clarify the matter under dispute before a formal decision by the bureau head.

(b) The written request for review should include a statement describing its reasons for a review, with any supporting documentation, or indicate that such a statement or documentation will be submitted within 30 days. A copy of the request must also be sent to the Director of the Office of Self-Governance.

(c) If the initial decision was made by the bureau head, any appeal shall be directed to the appropriate Assistant Secretary. If a Tribe does not request a review within 30 days of receipt of the decision, the initial decision will be final for the Department.

**§ 1000.434 When must the bureau head (or appropriate Assistant Secretary) issue a final decision in the pre-award appeal?**

Within 30 days of receiving the request for review and the statement of reasons described in § 1000.433, the bureau head or, where applicable, the appropriate Assistant Secretary must:

(a) Issue a written final decision stating the reasons for the decision; and

(b) Send the decision to the Tribe/Consortium.

**§ 1000.435 When and how will the Assistant Secretary respond to an appeal by a Tribe/Consortium?**

The appropriate Assistant Secretary will decide an appeal of any initial decision made by a bureau head (see § 1000.433). If the Tribe/Consortium has appealed the bureau's initial adverse decision of the bureau to the bureau head and the bureau head's decision on initial appeal is contrary to the Tribe's/Consortium's request for relief, or the bureau head fails to make a decision within 30 days of receipt by the bureau of the Tribe's/Consortium's initial request for review and any accompanying statement and documentation, the Tribe's/Consortium's appeal will be sent automatically to the appropriate Assistant Secretary for decision. The Assistant Secretary must either concur with the bureau head's decision or issue a separate decision within 60 days of receipt by the bureau of the Tribe's/Consortium's initial request for review and any accompanying statement and documentation. The decision of the Assistant Secretary is final for the Department.

**§ 1000.436 How may a Tribe/Consortium seek reconsideration of the Secretary's decision involving a self-governance compact?**

A Tribe/Consortium may request reconsideration of the Secretary's decision involving a self-governance compact by sending a written request for reconsideration to the Secretary within 30 days of receipt of the decision. A copy of this request must also be sent to the Director of the Office of Self-Governance.

**§ 1000.437 When will the Secretary respond to a request for reconsideration of a decision involving a self-governance compact?**

The Secretary must respond in writing to the Tribe/Consortium within 30 days of receipt of the Tribe's/Consortium's request for reconsideration.

**§ 1000.438 May Tribes/Consortia appeal Department decisions to a Federal court?**

Yes, Tribes/Consortia may appeal decisions of Department officials relating to the self-governance program to an appropriate Federal court, as authorized by section 110 of Pub. L. 93–638 (25 U.S.C. 405m-1), or any other applicable law.

## Subpart S—Conflicts of Interest

**§ 1000.460 What is an organizational conflict of interest?**

(a) An organizational conflict of interest arises when there is a direct conflict between the financial interests of the self-governance Tribe/Consortium and:

(1) The financial interests of beneficial owners of Indian trust resources;

(2) The financial interests of the United States relating to trust resources, trust acquisitions, or lands conveyed or to be conveyed under the Alaska Native Claims Settlement Act 43 U.S. C. 1601 *et seq.*; or

(3) An express statutory obligation of the United States to third parties. This section only applies if the conflict was not addressed when the AFA was first negotiated.

(b) This section only applies where the financial interests of the Tribe/Consortium are significant enough to impair the Tribe's/Consortium's objectivity in carrying out the AFA, or a portion of the AFA.

**§ 1000.461 What must a Tribe/Consortium do if an organizational conflict of interest arises under an AFA?**

This section only applies if the conflict was not addressed when the AFA was first negotiated. When a Tribe/Consortium becomes aware of an organizational conflict of interest, the Tribe/Consortium must immediately disclose the conflict to the Secretary.

**§ 1000.462 When must a Tribe/Consortium regulate its employees or subcontractors to avoid a personal conflict of interest?**

A Tribe/Consortium must maintain written standards of conduct to govern officers, employees, and agents (including subcontractors) engaged in functions related to the management of trust assets.

**§ 1000.463 What types of personal conflicts of interest involving tribal officers, employees or subcontractors would have to be regulated by a Tribe/Consortium?**

The Tribe/Consortium would need a tribally-approved mechanism to ensure that no officer, employee, or agent (including a subcontractor) of the Tribe/Consortium reviews a trust transaction in which that person has a financial or employment interest that conflicts with that of the trust beneficiary, whether the tribe/consortium or an allottee. Interests arising from membership in, or employment by, a Tribe/Consortium or rights to share in a tribal claim need not be regulated.

**§ 1000.464 What personal conflicts of interest must the standards of conduct regulate?**

The personal conflicts of interest standards must:

(a) Prohibit an officer, employee, or agent (including a subcontractor) from

participating in the review, analysis, or inspection of trust transactions involving an entity in which such persons have a direct financial interest or an employment relationship;

(b) Prohibit such officers, employees, or agents from accepting any gratuity, favor, or anything of more than nominal value, from a party (other than the Tribe/Consortium) with an in the trust transactions under review; and

(c) Provide for sanctions or remedies for violation of the standards.

**§ 1000.465 May a Tribe/Consortium negotiate AFA provisions on conflicts of interest to take the place of this subpart?**

(a) A Tribe/Consortium and the Secretary may agree to AFA provisions, concerning either personal or organizational conflicts, that:

(1) Address the issues specific to the program and activities contracted; and

(2) Provide equivalent protection against conflicts of interest to these regulations.

(b) Agreed-upon AFA provisions shall be followed, rather than the related provisions of this subpart. For example, the Tribe/Consortium and the Secretary may agree that using the Tribe's/Consortium's own written code of ethics satisfies the objectives of the personal conflicts provisions of subpart, in whole or in part.

Appendix A to Part 1000—Model Compact of Self-Governance Between The Tribe and the Department of the Interior

**Article I—Authority and Purpose**

*Section 1—Authority*

This agreement, denoted a compact of Self-Governance (hereinafter referred to as the ''compact''), is entered into by the Secretary of the Interior (hereinafter referred to as the ''Secretary''), for and on behalf of the United States of America under the authority granted by Title IV of the Indian Self Determination and Education Assistance Act, Pub. L. 93–638, as amended, and by the Tribe, under the authority of the Constitution and By-Laws of the Tribe (hereinafter referred to as the ''Tribe'').

*Section 2—Purpose*

This compact shall be liberally construed to achieve its purposes:

(a) This compact is to carry out Self-Governance as authorized by Title IV of Pub. L. 93–638, as amended, that built upon the Self Governance Demonstration Project, and transfer control to Tribal governments, upon Tribal request and through negotiation with the United States government, over funding and decision-making of certain Federal programs as an effective way to implement the Federal policy of government-to-government relations with Indian Tribes.

(b) This compact is to enable the United States to maintain and improve its unique and continuing relationship with and responsibility to the Tribe through Tribal self-governance, so that the Tribe may take its rightful place in the family of governments; remove Federal obstacles to effective self-governance; reorganize Tribal government programs and services; achieve efficiencies in service delivery; and provide a documented example for the development of future Federal Indian policy. This policy of Tribal self-governance shall permit an orderly transition from Federal domination of Indian programs and services to allow Indian Tribes meaningful authority to plan, conduct, and administer those programs and services to meet the needs of their people. In implementing Self-Governance, the Bureau of Indian Affairs is expected to provide the same level of service to other Tribal governments and to demonstrate new policies and methods to improve service delivery and address Tribal needs. In fulfilling its responsibilities under the compact, the Secretary hereby pledges that the Department will conduct all relations with the Tribe on a government-to-government basis.

**Article II—Terms, Provisions and Conditions**

*Section 1—Term*

This compact shall be effective when signed by the Secretary or an authorized representative and the authorized representative of the Tribe. The term of this compact shall commence [negotiated effective date] and must remain in effect as provided by Federal law or agreement of the parties.

*Section 2—Funding Amount*

In accordance with Section 403(g) of Title IV of Pub. L. 93–638, as amended, and subject to the availability of appropriations, the Secretary shall provide to the Tribe the total amount specified in each annual funding agreement.

*Section 3—Reports to Congress*

To implement Section 405 of Pub. L. 93–638, as amended, on each January 1 throughout the period of the compact, the Secretary shall make a written report to the Congress that shall include the views of the Tribe concerning the matters encompassed by Section 405(b) and (d).

*Section 4—Regulatory Authority*

The Tribe shall abide by all Federal regulations as published in the **Federal Register** unless waived in accordance with Section 403(i)(2) of Pub. L. 93–638, as amended.

*Section 5—Tribal Administrative Procedure*

The Tribe shall provide administrative due process right under the Indian Civil Rights Act of 1968, 25 U.S.C. 1301, *et seq.*, to protect all rights and interests that Indians, or groups of Indians, may have with respect to services, activities, programs, and functions that are provided under the compact.

**Article III—Obligations of the Tribe**

*Section 1—AFA Programs*

The Tribe will perform the programs as provided in the specific AFA negotiated under the Act. The Tribe pledges to practice utmost good faith in upholding its responsibility to provide such programs, under the Act.

*Section 2—Trust Services for Individual Indians*

To the extent that the AFAs have provisions for trust services to individual Indians that were formerly provided by the Secretary, the Tribe will maintain at least the same level of service as was previously provided by the Secretary. The Tribe pledges to practice utmost good faith in upholding their responsibility to provide such service.

**Article IV—Obligations of the United States**

*Section 1—Trust Responsibility*

The United States reaffirms the trust responsibility of the United States to the _____ Tribe(s) to protect and conserve the trust resources of the Tribe(s) and the trust resources of individual Indians associated with this compact and any annual funding agreement negotiated under the Tribal Self-Governance Act.

*Section 2—Trust Evaluations*

Under Section 403(d) of Pub. L. 93–638, as amended, annual funding agreements negotiated between the Secretary and an Indian Tribe shall include provisions to monitor the performance of trust functions by the Tribe through the annual trust evaluation.

**Article V—Other Provisions**

*Section 1—Facilitation*

Nothing in this compact may be construed to terminate, waive, modify, or reduce the trust responsibility of the United States to the Tribe(s) or individual Indians. The Secretary shall

act in good faith in upholding such trust responsibility.

*Section 2—Officials Not To Benefit*

No Member of Congress, or resident commissioner, shall be admitted to any share or part of any annual funding agreement or contract thereunder executed under this compact, or to any benefit that may arise from such compact. This paragraph may not be construed to apply to any contract with a third party entered into under an annual funding agreement under this compact if such contract is made with a corporation for the general benefit of the corporation.

*Section 3—Covenant Against Contingent Fees*

The parties warrant that no person or selling agency has been employed or retained to solicit or secure any contract executed under this compact upon an agreement or understanding for a commission, percentage, brokerage, or contingent fee, excepting bona fide employees or bona fide established commercial or selling agencies maintained by the contractor for the purpose of securing business.

*Section 4—Sovereign Immunity*

Nothing in this compact or any AFA shall be construed as—

(1) affecting, modifying, diminishing, or otherwise impairing the sovereign immunity from suit enjoyed by the Tribe; or

(2) authorizing or requiring the termination of any existing trust responsibility of the United States with respect to the Indian people.

In witness whereof, the parties have executed, delivered and formed this compact, effective the _____ day of _____, 20____.

THE _____ Tribe

The Department of the Interior.

By: _____

By: _____

[FR Doc. 00–31647 Filed 12–14–00; 8:45 am]

BILLING CODE 4310–02–P

Federal Register

Friday,
December 15, 2000

# Part V

# Federal Trade Commission

## 16 CFR Part 23

## Guides for the Jewelry, Precious Metals and Pewter Industries; Final Rule

**FEDERAL TRADE COMMISSION**

**16 CFR Part 23**

## Guides for the Jewelry, Precious Metals and Pewter Industries

**AGENCY:** Federal Trade Commission.

**ACTION:** Final guides.

**SUMMARY:** The Federal Trade Commission (Commission) announces that it is revising §§ 23.13 and 23.22 of the Guides for the Jewelry, Precious Metals and Pewter Industries (Jewelry Guides or Guides), 16 CFR Part 23. The Commission has combined § 23.13, which addresses the disclosure of diamond treatments, with § 23.22, which addresses treatments of other gemstones. The Commission also has revised these sections to provide for disclosure of any treatment to gemstones that significantly affects the value of the gemstone, which would include laser-drilling of diamonds.

**EFFECTIVE DATE:** April 10, 2001.

**ADDRESSES:** Requests for copies of this document should be sent to Public Reference Branch, Room 130, Federal Trade Commission, 600 Pennsylvania Avenue, NW, Washington, DC 20580. Copies also are available on the Commission's website at <www.ftc.gov>.

**FOR FURTHER INFORMATION CONTACT:** Robin Rosen Spector, Attorney, Federal Trade Commission, 600 Pennsylvania Avenue, NW, Washington, DC 20580, (202) 326–3740, <jewelry@ftc.gov>.

**SUPPLEMENTARY INFORMATION:**

### I. Introduction

The Commission announces that it is revising §§ 23.13 and 23.22 of its Guides for the Jewelry, Precious Metals, and Pewter Industries, 16 CFR Part 23 (Jewelry Guides or Guides). The Jewelry Guides address claims made about precious metals, diamonds, gemstones, and pearl products.[1] The Guides explain how to describe these products truthfully and non-deceptively and how to avoid unfair or deceptive practices. Sections 23.13 and 23.22 of the Guides address the disclosure of certain treatments to diamonds and other gemstones that are performed to improve their beauty or durability. Some treatments are not permanent because their effects fade over time. For example, gemstones sometimes are treated with a colorless oil that improves the color of the stone and helps to mask certain imperfections. Other treated gemstones require special care to retain the benefit of the treatment. For example, a stone that is fracture-filled (*i.e.,* injected with plastic or glass to hide cracks and improve its appearance) cannot be cleaned with certain types of jewelry cleaners, because the cleaner could adversely affect the treatment. In addition, re-cutting or re-setting a fracture-filled stone could damage the treatment.[2] Other gemstone treatments are permanent and do not create special care requirements, but the treated gemstone is not as valuable as a similar untreated stone.

On June 8, 1999, the Commission solicited comment on a proposal to revise § 23.13 of the Guides to require disclosure of laser-drilling of diamonds.[3] The Commission also solicited comment on a proposal to revise § 23.22 of the Guides, which addresses other gemstone treatments, to provide for the disclosure of treatments similar to laser-drilling—those that are permanent and do not create special care requirements for the stone, but significantly affect the value of the stone. The Commission received 40 comments.[4] After reviewing these comments, the Commission has decided to revise the Guides to provide for disclosure of permanent gemstone treatments that significantly affect the value of the gemstone, such as laser-drilling.

### II. Background

On December 9, 1998, two jewelry trade associations, the Jewelers Vigilance Committee (JVC), a trade association promoting ethical jewelry sales practices, and the Diamond Manufacturers and Importers Association of America (DMIA), jointly petitioned the Commission to revise § 23.13 of the Jewelry Guides to add laser drilling to the list of diamond treatments that should be disclosed.[5] Laser drilling involves directing a laser beam at an inclusion and forcing acid through the resulting tunnel, thereby removing the inclusion or rendering it invisible to the naked eye. Thus, the diamond's appearance is improved.

In a 1996 review of the Guides, the Commission determined, based on the record before it, that the failure to disclose laser-drilling was not unfair or deceptive. The evidence presented in the comments to the Commission indicated that laser-drilling of diamonds was ''a common practice and not an extraordinary process.''[6] Moreover, the evidence demonstrated that, while laser-drilling produces a small surface opening on a diamond, ''the majority of diamonds sold in the U.S. have similar surface imperfections.''[7] Surface imperfections are to be expected in diamonds, except in diamonds described as flawless. The record also reflected that disclosing laser-drilling in each advertisement or promotional description could be costly and the additional advertising costs could be passed on to consumers in the form of higher prices.[8] At that time, there was a conflict in the industry regarding the need for and the appropriateness of disclosure. Therefore, the Commission decided not to amend § 23.13 of the Guides to require disclosure.

The JVC petition asks the Commission to reconsider its decision based on the following factors: (1) There is now widespread industry support for disclosure; (2) the amendment would promote industry disclosure and self-regulation; (3) disclosure would impose few costs on retailers, and therefore, no increased costs to consumers; (4) technological advances make it increasingly difficult for consumers to

[1] The Commission issues industry guides to provide guidance for the public to conform with legal requirements. Industry guides are administrative interpretations of the laws the Commission administers. Industry guides explain how to describe products truthfully and non-deceptively and identify practices the Commission considers unfair or deceptive.

[2] The American Gem Trade Association (AGTA) publishes a manual that contains a comprehensive listing of gemstone treatments and information regarding the permanence of the treatment and special care requirements. AGTA–2 (022A).

[3] 64 FR 30448 (June 8, 1999).

[4] In the remainder of this FRN, the comments are cited to by an abbreviation of the comment name and the comment number. Attached to this FRN as Appendix A is a list of the comment name, abbreviation and comment number used to identify each commenter. The comments numbered 1 to 21 were received in response to the Commission's first request for comment dated June 8, 1999. 64 FR 30448. The comments numbered 1A to 22A were received after the Commission extended the deadline to submit comments. 64 FR 37051 (July 9, 1999). Three comments were submitted twice, by US mail and by electronic mail. These comments are listed once and are referred to in this FRN by the number of the comment that was received first.

[5] Fifteen trade associations joined the JVC and DMIA petition: World Federation of Diamond Bourses; International Diamond Manufacturers Association; Diamond Promotion Services; Diamond Dealers Club of New York; Gemological Institute of America; International Society of Appraisers; Jewelers of America; American Gemstone Society; American Gem Society; United States Carat Club; International Confederation of Jewelry, Silverware, Diamonds, Pearls and Stones; American Gemstone Trade Association; Manufacturing Jewelers and Suppliers of America; International Standards Organization; and Diamond High Council. The petition is on the public record and copies are available by contacting the Public Reference Branch, Room 130, Federal Trade Commission, Washington, DC 20580. The petition also has been posted on the Commission's website at <www.ftc.gov>. For the remainder of this **Federal Register** Notice, the petition will be referred to as the JVC petition.

[6] 61 FR 27177, 27197 (May 30, 1996).

[7] Id. at 27196.

[8] Id. at 27197 n.305–06.

detect laser-drilling; (5) consumers would not necessarily learn about laser-drilling through grading reports because most diamonds sold in the US are small stones that typically are not accompanied by such a report; (6) consumers may suffer economic injury by purchasing laser-drilled diamonds without disclosure, because such stones are worth less than untreated diamonds; and, (7) laser drilling is no different than other permanent artificial processes that affect the value of products that already are required to be disclosed (e.g., cultured pearls must be identified as ''cultured'' because they are created by humans inserting an irritant into an oyster's shell and are worth less than natural pearls).

## III. Laser-Drilling of Diamonds

### *A. Request for Comment*

The Commission tentatively concluded that the JVC petition demonstrated, contrary to the record before the Commission in 1996, that the failure to disclose laser-drilling is an unfair or deceptive trade practice. Therefore, in June 1999 the Commission solicited comment on a proposal to include laser-drilling as a treatment that should be disclosed.[9] The FRN posed several questions regarding this proposed revision. Question 1 asked whether it was currently a prevalent practice in the industry to disclose laser-drilling at all levels of the transaction up to the sale to the consumer. Question 2 asked: ''Would a provision in the Jewelry Guides to disclose laser-drilling to consumers inhibit advertising or create additional costs for retailers that could be passed on to consumers in the form of significantly higher prices?'' Finally, Question 3 asked: ''Is there a disparity in value between a laser-drilled diamond and an untreated diamond of the same clarity rating?'

### *B. Summary of the Comments*

The comments, except for one, support revising the Guides to provide for disclosure of laser-drilling. The comments responding to Question 1, however, indicate that there is not an industry consensus on whether disclosure currently is the prevalent practice. Two comments state that disclosure is the industry practice.[10] One comment states that disclosure was the industry practice until the FTC revised the Jewelry Guides in 1996.[11] Because the Jewelry Guides, as revised in 1996, did not provide for disclosure of laser-drilling, this comment asserts that some industry members stopped disclosing the treatment. Two comments state simply that it is not an industry practice to disclose.[12] One comment explains that ethical sellers disclose but unethical ones do not.[13] With respect to Question 2 of the FRN, the comments are unanimous that disclosure will not result in additional costs.[14] Finally, the comments, responding to Question 3 of the FRN, are also unanimous that a laser-drilled diamond is worth less than a similar untreated diamond.[15] As one comment explains, a laser-drilled stone is not as rare as an untreated stone and therefore is less costly.[16]

### *C. Analysis of the Comments*

The comments establish that a laser-drilled stone is worth less than an untreated stone of the same clarity rating. Diamonds are graded on clarity on a scale running from Flawless (F) to Included (I), reflecting the number and size of inclusions appearing in the stone.[17] Laser-drilling can elevate a lesser quality diamond to a higher grade on standard clarity rating scales, increasing the stone's value. The JVC petition stated that the price differential between a diamond that has a natural black inclusion and one where laser drilling has removed the inclusion could be as much as twenty-five percent. Even more important, however, is the fact that the laser-drilled stone is worth less than a untreated stone of the equivalent clarity rating.[18]

For example, if a diamond has a clarity rating of SI1 and has a natural black inclusion, the inclusion could be removed by laser-drilling, improving the clarity of the stone to VS2. The stone would now be worth more than it was as a non-laser-drilled stone with a clarity rating of SI1. At the same time, the laser-drilled stone with a clarity rating of VS2 is worth less than a non-laser-drilled stone with a clarity rating of VS2. Laser-drilling produces a small surface opening on a diamond. These surface imperfections are similar to natural surface imperfections that are expected in diamonds unless they are described as flawless. Industry buyers and consumers nevertheless have a preference for diamonds that contain only naturally occurring imperfections.[19] Accordingly, diamond appraisers and consumers place a lower value on laser-drilled stones in comparison to non-laser-drilled stones of the same clarity.[20]

In determining whether a practice is deceptive, the Commission considers whether there is a representation or omission that is likely to mislead consumers acting reasonably under the circumstances.[21] The representation or omission must be material. Previously, the Commission had no basis on which to conclude that there were any significant differences between naturally occurring and man-made inclusions. New evidence, provided in response to the FRN suggests, however, that consumers and appraisers place a lower value on laser-drilled diamonds than on comparable diamonds with naturally occurring inclusions. Because laser-drilled diamonds are worth less than comparable non-drilled diamonds, failure to disclose laser-drilling may lead consumers to believe a laser-drilled stone is as valuable as an untreated stone of the same clarity rating.[22] In addition, not providing for disclosure inadvertently may have created an avenue for unscrupulous marketers to overcharge consumers for laser-drilled stones. Consumers are at a disadvantage due to the imbalance of information that currently exists regarding laser-drilling of diamonds. As a result, unscrupulous marketers can charge consumers the same price for a laser-drilled stone with, *e.g.,* a VS2 clarity rating, that they would charge for a untreated stone with

[9] 64 FR 30448.

[10] JVC (006A); AGTA–1 (015A).

[11] Matlins (001A).

[12] NAJA (016); Zale (007A).

[13] ISA (014).

[14] Matlins (001A); ISA (014); NAJA (016); CJAO (005A); JVC–1 (006A); Zale (007A); AGTA–1 (015A).

[15] Adamas (005); Sherman (007); Indenbaum (009); ISA (014); NAJA (016); Gaenzle (017); Matlins (001A); Rapaport (002A); Green (003A); Kapoor (004A); CJAO (005A); JVC–1 (006A); Zale (007A); Dua (013A); AGTA–1 (015A).

[16] Matlins (001A); see also NAJA (016) (''laser-drilled diamonds are less costly than similar clarity, non-drilled diamonds''); ISA (014) (''laser-drilled diamonds are generally less expensive than similar non-treated stones'').

[17] The ratings in between, from highest to lowest, are: Internally Flawless (IF); Very, Very Small Inclusions 1 (VVS1); Very, Very Small Inclusions 2 (VVS2); Very Small Inclusions 1 (VS1); Very Small Inclusions 2 (VS2); Small Inclusions 1 (SI1); and Small Inclusions 2 (SI2).

[18] JVC Petition, at 6–8.

[19] Matlins (01A); NAJA (011); ISA (014); AGTA–2 (022A).

[20] See ISA (014) (International Society of Appraisers comment stating that ''laser-drilled diamonds are generally less expensive than similar non-treated stones''); accord NAJA (011) (National Association of Jewelry Appraisers); see also Gaenzle (017) (consumer comment attaching a petition signed by 500 consumers requesting revision of the Jewelry Guides to provide for disclosure of laser-drilling of diamonds because consumers are being deceived as to the value of laser-drilled diamonds).

[21] Deception Policy Statement, Cliffdale Associates, Inc., 103 F.T.C. 110, 174 (1984), Letter dated Oct. 14, 1983, from the Commission to Chairman John D. Dingell.

[22] See Gaenzle (017) (consumer comment attaching a petition signed by 500 consumers requesting revision of the Jewelry Guides to provide for disclosure of laser-drilling of diamonds because consumers are being deceived as to the value of laser-drilled diamonds).

a VS2 clarity rating, even though the laser-drilled stone is worth less than the untreated stone.[23]

Because the record indicates that failure to disclose laser-drilling may mislead consumers as to the value of the diamond, the Commission has concluded that failure to disclose laser-drilling is deceptive and that the benefits to consumers of requiring sellers to disclose laser-drilling outweigh any potential costs.[24] Accordingly, the Commission is revising the Jewelry Guides to require laser-drilling of diamonds to be disclosed. The manner in which the Guides require disclosure of this treatment is discussed in Part V below.

## IV. Other Permanent Gemstone Treatments

### *A. Request for Comment*

The Commission's FRN also sought comment regarding proposed changes to § 23.22 of the Guides, which addresses treatments to gemstones generally. This section states that it is unfair or deceptive to fail to disclose that a gemstone has been treated in any manner that is not permanent or that creates special care requirements and to fail to disclose that the treatment is not permanent, if such is the case. As explained above, some gemstone treatments are not permanent and, as a result, the color of the stone may fade or inclusions may become more visible as the treatment fades. In addition, some treated gemstones require special care. The Commission determined, during the 1996 revision of the Guides, that consumers would not expect a gemstone to change over time and should be made aware of any special care requirements necessary to preserve the product. Accordingly, § 23.22 provides for disclosure of non-permanent gemstone treatments and treatments that create special care requirements for the gemstone.

In light of the petition's evidence about laser-drilling, the Commission sought comment on whether consumers may be injured by non-disclosure of other permanent gemstone treatments that do not create special care requirements but do affect the value of the stone. For instance, sapphires are often heat treated to enhance their color. This treatment is permanent and does not create special care requirements. An untreated sapphire, however, could be considered more valuable than a heat-treated stone, and absent disclosure consumers may be deceived as to the value of the stone. Further, new technologies for treating gemstones are continually developing that might affect the value of the gemstone, similar to how laser-drilling affects the value of diamonds. Accordingly, the Commission asked whether § 23.22 of the Jewelry Guides should be revised to require disclosure of permanent treatments that do not require special care, if the treatment has a significant effect on the stone's value and a consumer, acting reasonably under the circumstances, could not ascertain that the stone has been treated.

Specifically, the FRN asked: ''Is there a disparity in value between a gemstone treated in a manner that is permanent and does not require special care and one that is not treated? How many different gemstones and gemstone treatments fall into this category?'' The FRN also asked whether industry policy provides for disclosure of permanent gemstone treatments that do not create special care requirements. Finally, the FRN asked: ''Would guidance in the Jewelry Guides calling for disclosure of permanent gemstone treatments that do not require special care inhibit advertising or create additional costs for retailers that could be passed on to consumers in the form of significantly higher prices? Would this guidance adversely impact competition in any way?''

### *B. Summary of the Comments*

The comments state that currently it is not a widespread industry policy to disclose permanent gemstone treatments that do not create special care requirements.[25] But, the comments also contend that requiring disclosure of these treatments would not inhibit advertising or create additional costs for retailers in most instances.[26] Thus, overall, the comments support amending the Guides to provide for disclosure of permanent gemstone treatments.[27]

Eight comments discussed whether there is a disparity in value between a gemstone treated in a manner that is permanent and does not require special care and one that is not treated. All eight assert that a treated gemstone is less valuable than a untreated gemstone even if the treatment is permanent and does not create special care requirements.[28]

A number of comments also address the two proposed conditions that would trigger a disclosure: (1) The treatment has a significant effect on the stone's value; and, (2) a consumer, acting reasonably under the circumstances, could not ascertain that the stone has been treated. These proposed conditions generated significant comment, as discussed below.

### *C. Analysis of Comments*

Based on the record and for the same reasons that the Commission is now requiring laser drilling to be disclosed, the Commission has determined that the Guides should require disclosure of permanent gemstone treatments that significantly affect a stone's value. As one comment explains ''[t]here is definitely a disparity in price between natural unenhanced gemstones, and those which are enhanced. And it does not matter whether the treatment is permanent or not, or whether special care is required * * * Treated gems are less rare than non-treated gems, and cost less.''[29] For example, blue sapphires are often heat treated to enhance their color. This treatment is permanent and the stone does not require special care. If one compared two sapphires of the same size and clarity but one obtained its rich, blue color naturally and the other from heat treatment, the treated sapphire would be worth less.[30] In fact,

[23] Although laser-drilling adds to the cost of a stone, the amount added is substantially less than the price differential between a non-lasered stone of a certain clarity rating and a stone that achieves that clarity rating as a result of laser-drilling. JVC Petition, at 6–8.

[24] As explained above, the JVC petition asserts that disclosure will not result in additional costs because it is already industry practice to disclose laser-drilling at all levels of the transaction up to the sale to the consumers. Although the comments do not agree that disclosure is currently a widespread industry practice, the industry unanimously asserts that disclosure of laser-drilling to consumers will not result in additional costs that could be passed on to them in the form of higher prices. Thus, to the extent requiring disclosure changes industry practice, the changed practice will benefit consumers. Further, the disclosure requirement does not apply to general ads; the Guides only require that disclosure be made prior to sale.

[25] The following comments state that current industry policy is not to disclose. ISA (014); NAJA (016); Gaenzle (017); Matlins (001A); CJAO (005A). The following comments recommend disclosure. JVC–1 (006A); Zale (00A); AGTA–1 (015A).

[26] ISA (014); NAJA (016); Matlins (001A); Kapoor (004A); JVC–1 (006A); Zale (007A); AGTA–1 (015A).

[27] See DMIA (002); Lange (003); Chuck (004); Adamas (005); DiamondDude (006); Shrake (013); ISA (014); JIC–1 (015); Gaenzle (017); JIC–2 (018); Miranda (020); Matlins (001A); CJAO (005A); JVC–1 (006A); Zale (007A); Bothra (008A); Baum (011A); GE–1 (014A); AGTA–1 (015A); NRF (017A); AIS (018A).

[28] Matlins (001A); Adamas (005); NAJA (016); ISA (014); CJAO (005A); JVC–1 (006A); Zale (007A); AGTA–1 (015A).

[29] Matlins (001A); see also Adamas (005) (''[t]reatments applied to gemstones significantly effect the cost and ultimate value''); NAJA (016) (''[t]here is a disparity in rarity of treated vs. natural gemstones and therefore almost always some price differential exists.'').

[30] Matlins (001A). This commenter explains, however, that untreated sapphires often do not sell

there are some retailers that specialize in untreated stones and charge a premium for these products.[31]

1. Conditions Triggering Disclosure

*a. Significant Effect on Value.* Although the record establishes that there is a disparity in value between treated and untreated gemstones, failure to disclose the treatment is deceptive only if the omission is material to consumers. Thus, the purpose of the first condition—that the treatment have a significant effect on value—was to trigger disclosure in circumstances where the information would be important to consumers and not where there were small value changes that were not likely to affect consumers' purchasing decisions. In addition, the Commission did not intend for the Guides to require disclosure of routine processing treatments, such as cutting and polishing, that all stones undergo that enhance their value. The comments, however, question whether conditioning disclosure upon whether the treatment has an effect on value is necessary and whether the term ''significant'' should modify this condition.

First, a few comments assert that the phrase ''effect on value'' is unclear. The comments note that the proposed language does not indicate what kind of effect on value triggers disclosure.[32] They note that treatments have two effects on value—first, the stone is more valuable than it was before it was treated; second, the stone may be less valuable than a similar untreated stone. As explained above, the Commission is concerned with the effect on value that is material to a consumer's purchasing decision, i.e., whether the treated stone is less valuable than a comparable untreated stone.

Another commenter, AGTA, opposes tying the treatment disclosure to value, stating:

All treatments, permanent or otherwise, are performed to increase the value of untreated material. To propose otherwise implies that when comparing two gemstones with similar characteristics of quality, one treated and another untreated, they should be considered of equal value. This goes directly against the fundamental property of ''rarity'' with respect to untreated gemstones.[33]

Thus, AGTA instead proposes that all treatments to gemstones be disclosed regardless of permanence, special care, or their effect on value.

The Commission finds, however, that failure to disclose a gemstone treatment is deceptive only if absent disclosure consumers would falsely believe that the treated gemstone is as valuable as a similar untreated stone. Any treatment that in fact affects the value of a gemstone in a way that is material to consumers must be disclosed under the revised Guide.[34]

Second, with respect to the term ''significant,'' several comments state that the term ''significant'' does not provide sufficient guidance as to when disclosure is required.[35] One comment explains that the word ''significant'' could create a loophole for unethical sellers to avoid disclosure by arguing that the treatment's effect on the value of the stone was not significant.[36] The Commission concludes that the term ''significant'' is necessary to limit the disclosure requirement to instances where the failure to disclose treatment information would be deceptive. Disclosure of permanent treatments is necessary only where the treatment's effect on value is likely to affect a consumer's purchasing decision.

The Commission often uses the term ''significant'' to establish materiality, that is claims or omissions that are likely to affect purchasing decisions. For example, the Commission's Deception Policy Statement explains that the Commission considers certain categories of information presumptively material, including claims that ''significantly involve health, safety, or other areas with which the reasonable consumer would be concerned,'' including a claim that ''concerns the purpose, safety, efficacy or cost of the product or service.'' [37] Thus, the inclusion of the word ''significant'' is meant to provide a practical, common sense limitation on when disclosures should be made.

The Commission also acknowledges that the value of the gemstone in a piece of jewelry may not be determinative of the price. Factors such as the workmanship of the piece and overall beauty undoubtedly affect the price charged for the product. Holding these factors constant, however, retailers should evaluate whether the gemstone treatment makes the product less valuable than it would be if it contained an untreated stone. The difference in value as a result of a gemstone treatment, although not large from the seller's point of view, might be significant to consumers who might reasonably expect to pay less for a product containing a treated stone or would choose a piece with an untreated stone if the treatment were disclosed. The consumer's point of view is the relevant viewpoint from which to analyze the necessity for disclosure.[38]

*b. Consumer Acting Reasonably under the Circumstances.* The comments also expressed concern regarding the second condition that triggered disclosure in the Commission's proposed changes to § 23.22—i.e., a consumer, acting reasonably under the circumstances, could not ascertain that the stone has been treated. This condition was designed to incorporate the concept of ''reasonableness,'' which is an element of deception.[39] The test is whether it is reasonable for consumers to believe that two seemingly identical stones are identical or very comparable in value based either on the ad, the stones themselves or the seller's representation, about other characteristics of the stone (e.g., carat weight, cut and color).[40]

Based on the comments, the Commission concludes that consumers acting reasonably under the circumstances, in the absence of disclosure, could believe (incorrectly) that the treated stone and untreated stone have the same or nearly the same value. Thus, the Commission has determined that failure to disclose a gemstone treatment that has a significant effect on the value of the stone may mislead reasonable consumers as to the value of the stone and has revised the guide to require

for a higher price than treated stones. Some retailers do not charge a premium for the naturally colored stones because in order to explain the price differential the retailer would have to disclose that the other stones were treated.

[31] *Id.*

[32] NRF (017A); Zale (007A); AIS (018A).

[33] AGTA–2 (022A) (emphasis in original).

[34] If, in fact, all treatments have such an effect on the value of gemstones, then all treatments will need to be disclosed. There may, however, be some exceptions, such as the treatments to very small gemstones in jewelry pieces, which is discussed below.

[35] Gaenzle (017); JVC–1 (006A); NRF (017A); GE–2 (020A).

[36] GE–2 (020A).

[37] *Deception Policy Statement,* 103 F.T.C. at 182–83 (emphasis added, footnotes omitted). In addition, prior orders and guides also tie disclosures to situations involving significance. For example, an order against a pharmaceutical company prohibits the company from representing that ''any such [mouthwash] product will have any **significant** beneficial effect on the symptoms of sore throats.'' *Warner-Lambert Co.,* 92 F.T.C. 191, 192 (1978) (emphasis added). Similarly, the Commission's Guides for the Use of Environmental Marketing Claims provide ''[i]f an incidental component **significantly** limits the ability to recycle a product or package, a claim of recyclability would be deceptive.'' 16 CFR 260.7(d) (emphasis added).

[38] In evaluating whether a treatment should be disclosed retailers could ask themselves how a consumer would react if he discovers this treatment after he leaves the store (for example, when he takes the stone to an appraiser or attempts to sell the piece).

[39] In addition, it was designed to determine alternatively whether an element of unfairness had been met.

[40] Deception Policy Statement, 103 F.T.C. at 174.

disclosure of such treatments. Accordingly, it is unnecessary to consider further whether a consumer could avoid injury by taking affirmative action, such as seeking an independent appraisal, before purchasing the product or to limit the disclosure requirement to situations where the consumer could not otherwise learn that the stone had been treated.[41]

2. Additional Issues Raised in the Comments

Although the comments support revising the Guides to provide for disclosure of permanent gemstone treatments that significantly affect the value of the gemstone, the comments raise two additional concerns regarding when disclosure is necessary. These concerns relate to disclosure of undetectable treatments and treatments to very small gemstones.

*a. Undetectable Treatments.* Several comments note that some gemstone treatments are not detectable, even by experts. These comments express concern that requiring disclosure of any gemstone treatment that has a significant effect on the stone's value would put retailers at a high risk for lawsuits for failing to disclose treatments even when the seller did not know or have reason to know about the treatments.[42] This concern stems largely from the new GE diamond treatment that is performed on diamonds with inferior color (*e.g.,* brown or very yellow diamonds), which permanently and greatly improves their color without any need for special care.[43] Currently, this treatment is not detectable.[44] Since the treatment only recently became available, it is unclear whether it will affect a diamond's value. Some industry groups have opined that the treatment will affect a diamond's value and, therefore, disclosure would be required under the proposed Guides.[45] Because the treatment is undetectable, however, these comments propose adding to § 23.22 a phrase that permanent treatments should be disclosed ''if said treatments are known or reasonably should have been known to the seller at the time of sale.''[46]

Adding such a phrase, however, might provide unscrupulous marketers with an opportunity to avoid disclosure by arguing that they did not know the gemstone had been treated. AGTA strongly opposes the addition of this language, noting such language would ''leave loopholes in gemstone enhancement disclosure guidelines that would ultimately be damaging to our trade.''[47] AGTA publishes a manual on gemstone treatments that advises that if a gemstone falls into a group that is routinely enhanced, the seller must assume that it has been enhanced, even if he is unaware of whether the treatment has been performed or not, and disclose the treatment.[48]

The Commission has decided not to add the limiting phrase because all members of the jewelry industry, not just retailers, have an obligation to disclose treatments to others in the line of distribution and a duty to make reasonable inquiries about whether the products they are purchasing have been treated. At the same time, the Commission is mindful that responsible retailers may be misled about whether the gemstones they have purchased have been treated or not. The Commission's ability and willingness to exercise prosecutorial discretion in such situations should alleviate retailers' concerns that they unreasonably would be held accountable for others' illegal conduct. To address the concern raised in the comments, however, the Commission has added a note to § 23.22 reiterating that the disclosures outlined in this section are applicable to sellers at every level of trade, as defined in § 23.0(b) of these Guides.[49]

*b. Treatments to Small Gemstones.* Several comments relate an additional concern regarding treatments to very small gemstones, such as stones weighing less than .10 carat.[50] These comments explain that very small stones generally are sold mounted in jewelry, not loose. Efforts to inspect the stones individually to detect treatments would be very expensive and would likely result in higher consumer prices.[51] In addition, the detection efforts might destroy the piece.[52] The comments further state that the price of the piece is not based on the value of the individual gemstones but on the jewelry piece as a whole. These comments request that the Commission craft an exemption to the disclosure provisions for very small stones.[53]

The Commission has determined that an exemption is not necessary to address gemstone disclosures for very small stones. If, as the comments state, the price of the piece is not based on the value of each individual gemstone, a permanent gemstone treatment performed on some or all of the stones may not significantly affect the value of a jewelry product containing very small gemstones. Thus, disclosure may not be required under the revised Guide.

The Guides, however, already require, regardless of the stone's size, that non-permanent gemstone treatments or treatments requiring special care still be disclosed. When the Commission revised the Guides to require disclosure of these treatments, it did not exempt very small gemstones. The Commission explained in 1996 that ''if consumers are unaware of the non-permanency of a treatment or the special care requirements associated with a treatment, the gemstone may not meet their expectations, if the color fades or inclusions appear, etc.''[54] This reasoning applies to all jewelry products regardless of the size of the gemstones contained in the product.

In addition, individual inspection of each stone is not necessary to disclose gemstone treatments. For example, if a jewelry piece contains very small emeralds, the retailer could disclose that the emeralds have likely been oiled and disclose that the treatment is not permanent and the special care requirements necessary to care for oiled emeralds. It is prudent and appropriate to disclose gemstone treatments, rather than remain silent, where there is a possibility that the stones have been treated.

The Commission is aware of several large retailers that currently employ this practice. For instance, some retailers selling jewelry on the Internet include a general disclosure on their websites such as: ''Gemstone products are often treated to enhance their beauty. Some of these treatments are not permanent or the stone requires special care. Click here for more information about gemstone treatments.'' The link then provides information about gemstone treatments, including whether the

[41] Because the omission or any implied misrepresentations may mislead consumers, the Commission has concluded that it is not necessary to determine separately whether the practice is unfair.

[42] JVC–1 (006A); Zale (007A); NRF (017A).

[43] See, *e.g.,* JVC–1 (006A); AIS (018A); Adamas (005); DiamondDude (006); Matlins (001A). In fact, the introduction of this treatment was the impetus for many comments' support for disclosure of permanent gemstone treatments that do not create special care requirements.

[44] GE–1 (014A).

[45] *E.g.,* AIS (018A); JVC–1 (006A). General Electric voluntarily is disclosing the treatment right now. GE–1 (014A).

[46] JVC–1 (006A); accord Zale (007A); NRF (017A).

[47] AGTA–2 (022A).

[48] *Id.*

[49] Several comments indicated that the Guides should specify that the disclosure provisions apply to all levels of trade.

[50] Zale (007A); NRF (017A); Indenbaum (009).

[51] One retailer stated that it could not continue to sell these types of pieces if disclosure were required because the cost would be so prohibitive. Zale (007A).

[52] Zale (007A).

[53] Zale (007A); NRF (017A); Indenbaum (009).

[54] 61 FR 27207.

treatments are permanent or require any special care to maintain. In addition, as required by the Guides, these disclosures are provided prior to consummation of the sale. Other large retailers use counter placards that are clearly and conspicuously placed above display cases showcasing gemstone products. The placards include general disclosures about gemstone treatments and direct consumers to ask a salesperson for more information. Pamphlets providing information about gemstone treatments are available on the counter near the placards. These methods of gemstone treatment disclosure comply with the Jewelry Guides and can be used to disclose gemstone treatments that significantly affect the value of gemstones.

## V. Revisions to the Guides

As noted above, the Commission is revising the Jewelry Guides to require disclosure of laser-drilling and other permanent gemstone treatments that significantly affect the value of the gemstone. The Commission has determined to combine §§ 23.13 and 23.22. The first section addresses the disclosure of diamond treatments and the second addresses gemstone treatments. The current sections, and the originally proposed revisions, are not identical. Many comments requested that the Commission make the two sections consistent. The Commission has determined that there is no reason to treat the disclosure of treatments to diamonds and to gemstones differently. Therefore, the Commission is combining the two sections. Section 23.13, in the diamonds section of the Guides, will direct readers to § 23.22, which will address treatments to all gemstones, including diamonds.

Section 23.22 of the Guides is revised to include three sub-paragraphs addressing three categories of gemstone treatments. Section 23.22(a) require disclosure of non-permanent gemstone treatments and the fact that the treatment is not permanent. Section 23.22(b) requires disclosure of treatments that create special care requirements for the gemstone and advises sellers to disclose what those requirements are. Section 23.22(c) requires disclosure of gemstone treatments that significantly affect a stone's value.

Previously, the sections listed the various treatments that should be disclosed. The comments indicate that the jewelry industry is continually developing new treatments.[55] Thus, any examples of treatments included in the Guides could be out-of-date fairly quickly. Therefore, the Commission has determined that the Guides would be more useful to the industry if the treatment disclosure provisions provide general guidance that could be applied to whatever treatments are being used. Information regarding the application of the Guides to specific treatments will be addressed in the Commission's consumer and business education materials.[56] Finally, as noted above, revised § 23.22 contains a note stating that the disclosure provisions apply to all levels of trade.

## List of Subjects in 16 CFR Part 23

Advertising, Jewelry, Labeling, and Trade practices.

For the reasons set forth in the preamble, the Federal Trade Commission amends Chapter I of Title 16 of the Code of Federal Regulations as follows:

## PART 23—GUIDES FOR THE JEWELRY, PRECIOUS METALS, AND PEWTER INDUSTRIES.

1. The authority citation for part 23 continues to read as follows:

**Authority:** Sec. 6, 5, 38 Stat. 721, 719; 15 U.S.C. 46, 45.

2. Revise § 23.13 to read as follows:

### § 23.13 Disclosure of treatments to diamonds

A diamond is a gemstone product. Treatments to diamonds should be disclosed in the manner prescribed in § 23.22 of these guides, Disclosure of treatments to gemstones.

3. Revise § 23.22 to read as follows:

### § 23.22 Disclosure of treatments to gemstones.

It is unfair or deceptive to fail to disclose that a gemstone has been treated if:

(a) The treatment is not permanent. The seller should disclose that the gemstone has been treated and that the treatment is or may not be permanent;

(b) The treatment creates special care requirements for the gemstone. The seller should disclose that the gemstone has been treated and has special care requirements. It is also recommended that the seller disclose the special care requirements to the purchaser;

(c) The treatment has a significant effect on the stone's value. The seller should disclose that the gemstone has been treated.

**Note to § 23.22:** The disclosures outlined in this section are applicable to sellers at every level of trade, as defined in § 23.0(b) of these Guides, and they may be made at the point of sale prior to sale; except that where a jewelry product can be purchased without personally viewing the product, (e.g., direct mail catalogs, online services, televised shopping programs) disclosure should be made in the solicitation for or description of the product.

By direction of the Commission.

**Donald S. Clark,**

*Secretary.*

**Note:** The following appendix will not appear in the Code of Federal Regulations.

## Appendix A

| Abbreviation | Number | Commenter |
|---|---|---|
| Gross | 001 | Gross Diamond Corporation. |
| DMIA | 002 | Diamond Manufacturers & Importers Association of America. |
| Lange | 003 | Erik Lange. |
| Chuck | 004 | Chuck <*diamonds@execpc.com*>. |
| Adamas | 005 | Adamas Gemological Laboratory. |
| Diamond Dude | 006 | Diamond Dude. |
| Sherman | 007 | Alan Sherman. |

[55] E.g., Matlins (001A); AIS (018A).

[56] For at least 20 years, the Commission has published a consumer education pamphlet describing the Jewelry Guides and advising consumers on jewelry industry terms and practices. This publication has been revised several times over the years to address developments in the industry. In 1998, the Commission published a business guide to assist business in complying with the Guides. These publications, ''All That Glitters: How to Buy Jewelry,'' and the business guide, ''In the Loupe: Advertising Diamonds, Gemstones and Pearls,'' are available by contacting the FTC Consumer Response Center, 600 Pennsylvania Avenue, NW, Washington, DC 20580, (877) FTC–HELP or from the FTC website at <www.ftc.gov>.

The Commission also notes that for at least the past 10 years, AGTA has published a Gemstone Information Manual, which details gemstone enhancements and provides information regarding the permanency of treatments and special care requirements. This manual is updated frequently and can respond to industry trends more rapidly and with greater precision than the FTC Jewelry Guides. The industry is encouraged to use this and other industry resources in conjunction with the Commission's Jewelry Guides to avoid unfair or deceptive trade practices.

| Abbreviation | Number | Commenter |
|---|---|---|
| Rist | 008 | John Rist. |
| Indenbaum | 009 | Arthur Indenbaum. |
| Brown | 010 | Grahame Brown. |
| Sagan | 011 | Van Sagan. |
| Park City | 012 | Park City Jewelers. |
| Shrake | 013 | Jim Shrake. |
| ISA | 014 | International Society of Appraisers. |
| JIC–1 | 015 | Jewelry Information Center comment 1. |
| NAJA | 016 | The National Association of Jewelry Appraisers. |
| Gaenzle | 017 | Bonnie Burton Gaenzle. |
| JIC–2 | 018 | Jewelry Information Center comment 2. |
| Jensen | 019 | Karen Jensen. |
| Miranda | 020 | Jose Miranda. |
| Themelis | 021 | Ted Themelis. |
| Matlins | 001A | Antoinette Leonard Matlins. |
| Rapaport | 002A (& 010A) | Martin Rapaport. |
| Green | 003A | Green Brothers LLC. |
| Kapoor | 004A (& 009A) | Amit Kapoor. |
| CJAO | 005A (& 0012A) | CJAO. |
| JVC–1 | 006A | Jewelers Vigilance Committee comment 1. |
| Zale | 007A | Zale Corporation. |
| Bothra | 008A | Dharmesh Bothra. |
| Baum | 011A | Baum Diamonds. |
| Dua | 013A | Deep Singh Dua. |
| GE–1 | 014A | General Electric comment 1. |
| AGTA–1 | 015A | American Gem Trade Association comment 1. |
| Mason-Kay | 016A | Mason-Kay, Inc. |
| NRF | 017A | National Retail Federation. |
| AIS | 018A | Appraisal Information Services. |
| JVC–2 | 019A | Jewelers Vigilance Committee comment 2. |
| GE–2 | 020A | General Electric comment 2. |
| Real Gems | 021A | Real Gems, Inc. |
| AGTA–2 | 022A | American Gem Trade Association comment 2. |

[FR Doc. 00–31776 Filed 12–14–00; 8:45 am]

**BILLING CODE 6750–01–P**

Federal Register

Friday,
December 15, 2000

# Part VI

# Environmental Protection Agency

## 40 CFR Part 799

## Toxic Substances Control Act Test Guidelines; Final Rule

**ENVIRONMENTAL PROTECTION AGENCY**

**40 CFR Part 799**

**[OPPTS–42211; FRL–6551–2]**

**RIN 2070–AD16**

## Toxic Substances Control Act Test Guidelines

**AGENCY:** Environmental Protection Agency (EPA).

**ACTION:** Final rule.

**SUMMARY:** This rule establishes 17 new Toxic Substances Control Act (TSCA) health effects test guidelines in the Code of Federal Regulations (CFR). Establishment of these guidelines provides a series of standardized test procedures and is necessary to ensure enforceable test standards in test rules promulgated under section 4 of TSCA. Codification of this series of TSCA test guidelines does not by itself impose obligations upon any person. Obligations are only imposed when these guidelines are cross-referenced in a test rule promulgated under section 4 of TSCA. The TSCA test guidelines are based on the harmonized test guidelines in the unified library for test guidelines issued by the Office of Prevention, Pesticides and Toxic Substances (OPPTS) for use in testing chemical substances to develop data for submission to EPA under TSCA, the Federal Food, Drug, and Cosmetic Act (FFDCA), and the Federal Insecticide, Fungicide, and Rodenticide Act (FIFRA). The process for developing and amending the harmonized test guidelines includes broad public participation and extensive involvement of the scientific community.

**DATES:** This rule is effective on December 15, 2000.

**FOR FURTHER INFORMATION CONTACT:** *For general information contact:* Barbara Cunningham, Director, Office of Program Management and Evaluation, Office of Pollution Prevention and Toxics (7401), Environmental Protection Agency, 1200 Pennsylvania Ave., NW., Washington, DC 20460; telephone number: (202) 554–1404; e-mail address: TSCA-Hotline@epa.gov.

*For technical information regarding this action or related activities contact:* Chemical Information and Testing Branch, Chemical Control Division, Office of Pollution Prevention and Toxics (7405), Environmental Protection Agency, 1200 Pennsylvania Ave., NW., Washington, DC 20460; telephone number: (202) 260–8130; e-mail address: ccd.citb@epa.gov.

**SUPPLEMENTARY INFORMATION:** This final rule establishes 17 new TSCA test guidelines in the series of TSCA test guidelines established in 40 CFR part 799.

### I. General Information

*A. Does this Action Apply to Me?*

You may be particularly interested in this action if you manufacture (defined by statute to include import) or process a chemical substance that could become the subject of a proposed test rule under TSCA section 4. This action does not, however, impose any obligations on anyone until the test guidelines are incorporated in a future test rule that would be proposed under TSCA section 4. Therefore, entities potentially affected by this action may include, but are not limited to:

| Type of Entity | NAICS | Examples of Potentially Affected Entities |
|---|---|---|
| Chemical Manufacturers or Importers | 325, 32411 | Persons who manufacture (defined by statute to include import) one or more of the subject chemical substances. |
| Chemical Processors | 325, 32411 | Persons who process one or more of the subject chemical substances. |

This listing is not intended to be exhaustive, but rather provides a guide for readers regarding entities likely to be affected by this action. The North American Industrial Classification System (NAICS) codes have been provided to assist you and others in determining whether or not this action might apply to certain entities. If you have any questions regarding the applicability of this action to a particular entity, consult the technical information contact listed under **FOR FURTHER INFORMATION CONTACT.**

*B. How Can I Get Additional Information, Including Copies of this Document and Other Related Documents?*

1. *Electronically*. You may obtain electronic copies of this document, and certain other related documents that might be available electronically, from the EPA Internet Home Page at http://www.epa.gov/. To access this document, on the Home Page select ''Laws and Regulations'' and then look up the entry for this document under the ''**Federal Register**—Environmental Documents.'' You can also go directly to the **Federal Register** listings at http://www.epa.gov/fedrgstr/.

2. *In person*. The Agency has established an official record for this action under docket control number OPPTS–42211. The official record consists of the documents specifically referenced in this action, any public comments received during an applicable comment period, and other information related to this action, including any information claimed as confidential business information (CBI). This official record includes the documents that are physically located in the docket, as well as the documents that are referenced in those documents. The public version of the official record does not include any information claimed as CBI. The public version of the official record, which includes printed, paper versions of any electronic comments submitted during an applicable comment period, is available for inspection in the TSCA Nonconfidential Information Center, North East Mall Rm. B–607, Waterside Mall, 401 M St., SW., Washington, DC. The Center is open from noon to 4 p.m., Monday through Friday, excluding legal holidays. The telephone number for the Center is (202) 260–7099.

### II. Background

*A. What are Test Guidelines?*

Test guidelines are a standardized set of test procedures or protocols organized by health effect or other testing endpoint. These guidelines present generally formulated procedures for laboratory testing of an effect or characteristic deemed important for the evaluation of health and environmental hazards of a chemical. These guidelines are designed to, when followed, produce data which are accurate, reliable, and reproducible. Such data are necessary for the regulatory programs under TSCA.

In adding these 17 TSCA test guidelines to the existing series of 11 TSCA test guidelines, EPA recognizes concerns have been expressed about animal testing. EPA is committed to avoiding unnecessary or duplicative animal testing. As part of this commitment, the Agency plays an

important role in the Federal Interagency Coordinating Committee on the Validation of Alternative Methods (ICCVAM) (http://iccvam.niehs.nih.gov/home.htm) whose goals are: (1) To encourage the reduction of the number of animals used in testing; (2) to seek opportunities to replace test methods requiring animals with alternative test methods when acceptable alternative methods are available; and (3) to refine existing test methods to optimize animal use when there is no substitute for animal testing. Further, where testing is needed to develop scientifically adequate data, the Agency is committed to reducing the number of animals used for testing, including, whenever possible, by incorporating *in vitro* (non-animal) test methods or other alternative approaches that have been scientifically validated and have received regulatory acceptance. EPA considers these goals and commitments to be important considerations in developing health effects data; however, they must be balanced with the essential need to conduct scientifically sound chemical hazard/risk assessments in support of the Agency's mission to protect human health and the environment.

The completion of this series of 28 TSCA test guidelines in part 799 provides EPA with a range of guidelines available for cross-referencing in TSCA actions. Several of these guidelines include in their design elimination of animals or reduction in the number of animals needed to conduct the tests. Some of the methods are designed to only develop data on chemical/physical properties. In addition, one of the guidelines involves the development of metabolism and pharmacokinetics data which could facilitate route-to-route extrapolations to existing (e.g., oral route) data and thus involve fewer test animals as compared to developing new data by, for example, the inhalation route. EPA believes that using these test guidelines will result in use of fewer test animals when it becomes necessary to conduct testing to fill identified data needs and will yield scientifically sound data.

*B. What are TSCA Test Guidelines?*

TSCA test guidelines are guidelines which were established to meet the regulatory needs of TSCA, particularly the needs of the TSCA section 4 testing program. The TSCA section 4 testing program is a regulatory program which is based on the promulgation of rules requiring certain persons identified in the rule, usually manufacturers and processors of the chemical to conduct testing of the chemical specified in the rule. Section 4(b)(1)(B) of TSCA specifically requires that test rules promulgated under the section 4 include ''standards for the development of test data for such substance or mixture * * *.'' These ''standards for the development of test data'' specify how the study is to be conducted, what data will be collected, and how the data will be analyzed. Each test rule must specify such ''test standards'' which contain specifications for testing. Section 4(b)(1) of TSCA describes the elements which must be described in these test standards.

The Agency has found that most of these elements can be standardized into the common set of protocols which EPA defines as ''test guidelines.'' These guidelines are organized by testing endpoint. The test rule itself can add or subtract to the requirements of the test guidelines in order to meet the unique testing circumstances for the particular chemical substance.

*C. How are TSCA Test Guidelines Used?*

The Agency uses this system of standardized guidelines, organized by testing endpoint and codified in a subpart of this part for use in cross-referencing in a TSCA section 4 action. When a section 4 test rule is promulgated, the test rule cross-references the appropriate TSCA test guideline for the bulk of the testing requirements. In this context, the public is given notice of, and an opportunity to comment on, these guidelines as they are applied in chemical-specific test rules. This approach eliminates the need to repeat the same test specifications for each substance-specific test rule since most of the specifications for testing do not change across substances. The test specifications in a guideline can be varied, when necessary, to the specific requirements of a test rule by language in the test rule itself.

*D. Where Did the TSCA Test Guidelines Come From?*

The TSCA test guidelines series were first promulgated in 1985 (50 FR 39252, September 27, 1985) and were established in 40 CFR parts 795 through 798. The Agency has over time amended and improved these guidelines (52 FR 19072, May 20, 1987) and in some cases revoked those guidelines which had not been cross-referenced in any test rules (60 FR 31917, June 19, 1995) (FRL–4955–2)).

In 1991, EPA began an effort to blend the testing guidance and requirements that existed in the Office of Pollution Prevention and Toxics (OPPT) appearing in 40 CFR parts 795 through 798, the Office of Pesticides Programs (OPP) guidelines which appeared in publications of the National Technical Information Service (NTIS), and the guidelines published by the international Organization for Economic Cooperation and Development (OECD). The product of this effort would be one set of guidelines which would be thus blended or ''harmonized.'' These harmonized guidelines would then be made available to the EPA, other government agencies, and the public through the World Wide Web (Internet) and would be accessible by anyone with a personal computer and the ability to connect to the Internet. The EPA Internet web site would be the site and publication source for the ''OPPTS Harmonized Guidelines'' at http://www.epa.gov/opptsfrs/home/guidelin.htm.

In addition, EPA has published three new OPPTS harmonized test guidelines for three health effects end points. These three guidelines (with their OPPTS harmonized guideline reference) are: (1) Repeated dose 28-day oral toxicity study in rodents (OPPTS 870.3050), (2) Reproduction/developmental toxicity screening test (OPPTS 870.3550), and (3) Combined repeat dose toxicity study with the reproduction/developmental toxicity screening test (OPPTS 870.3650). Their publication was announced in the **Federal Register** of July 13, 2000 (65 FR 43329) (FRL–6393–5), with the guidelines available from the EPA Internet web site at http://www.epa.gov/opptsfrs/home/guidelin.htm. By adopting these combined testing guidelines, which incorporate more than one endpoint, the Agency is acknowledging the desirability of reducing costs and numbers of animals required to meet the Agency's testing needs. EPA recommends the use of combined protocols wherever feasible to meet data development requirements.

*E. How were these OPPTS Harmonized Test Guidelines Developed?*

The OPPTS harmonized test guidelines for health effects endpoints were first drafted by EPA scientists for specific testing endpoints. These drafts were reviewed by other EPA experts and, in some instances, presented at domestic and international colloquia in order to solicit the views of recognized experts and the regulated community. These draft harmonized guidelines were made available on the Internet as public drafts and a notice was published in the **Federal Register** of June 20, 1996 (61 FR 31522) (FRL–5367–7) announcing the availability of these draft guidelines soliciting public comment.

After review of the public drafts, EPA published the final OPPTS harmonized guidelines for the health effects endpoints on the Internet and announced their availability to the public in the **Federal Register** of August 5, 1998 (63 FR 41845) (FRL–5740–1). EPA published the rationale for the changes made in finalizing the June 1996 OPPTS ''Public Draft'' guidelines to the August 1998 OPPTS ''Final'' guidelines in a document entitled ''Overview and Summary of Changes made in the Harmonization of OPPTS 870 Toxicology Guidelines with OECD Guidelines'' (which is available at http://www.epa.gov/opptsfrs/home/guidelin.htm).

*F. What is Done to Make TSCA Test Guidelines From the OPPTS Harmonized Test Guidelines?*

Harmonization has resulted in significantly improved guidelines. However, creating a single set of guidelines which can be used by both OPP, in its administration of the Federal Insecticide, Fungicide, and Rodenticide Act (FIFRA), and the Federal Food, Drug and Cosmetic Act (FFDCA), and the Office of Pollution Prevention and Toxics (OPPT), which administers TSCA presents certain challenges. Under FIFRA, test guidelines are used in an interactive process between the Agency and registrants seeking registration of pesticides or food residue tolerances. Flexibility to tailor required testing to individual circumstances is critical, and the Agency has considerable discretion to determine whether submitted test results are adequate to support the requested action. Under this scheme, registrants have an intrinsic motivation to conduct well-grounded testing. Thus, pesticide testing protocols tend to have few absolute requirements specifying the details of the conduct of the testing.

Under section 4 of TSCA, on the other hand, the Agency imposes prescriptive test requirements using notice and comment rulemaking. Rules promulgated under section 4 of TSCA must specify classes of affected parties and specify the standards to be followed by these parties in conducting the required testing. In contrast to FIFRA, the Agency does not interact with companies on an individual basis in designing the testing requirements.

TSCA section 4 rulemakings typically take years to complete. Without initiating another rulemaking process, the Agency has the ability to require further testing only if the tests were not conducted in accordance with the procedures specified in the test rule. In addition, the Agency has an alternative process of negotiating TSCA testing requirements via enforceable consent agreements (ECAs), but these agreements require the consent of all the parties involved. Under TSCA section 4 enforceable test standards, much in the conduct of these test protocols is left to the judgment of those professionals conducting the testing. EPA believes that certain provisions must be mandatory whenever the guidelines are cross-referenced in specific test rules.

Therefore, the Agency has used the OPPTS harmonized test guidelines developed using the public notice and comment process to create the TSCA-specific test guidelines which are the subject of this rule. TSCA section 4 test rules now cross-reference only the part 799 guidelines rather than the older, non-harmonized guidelines established in 40 CFR parts 795 through 798 mostly in 1985. The only significant difference between the TSCA test guidelines and the OPPTS harmonized test guidelines is that certain discretionary procedures in the OPPTS harmonized test guidelines are made mandatory (i.e., the guideline states that they ''must'' be carried out) in order to ensure the enforcibility of the test standard.

EPA promulgated the first set of guidelines in the new part 799 guidelines series in a **Federal Register** document published on August 15, 1997 (62 FR 43820) (FRL–5719–5). Eleven health effects guidelines were published, including those for inhalation toxicity, developmental toxicity, reproductive effects, carcinogenicity, mutagenicity, and immunotoxicity. EPA amended 7 of these 11 guidelines in a **Federal Register** document published on June 30, 1999 (64 FR 35072) (FRL–6067–4). These amendments reflected changes made to the corresponding OPPTS harmonized guideline.

## III. What Action is Being Taken?

EPA is adding 17 new health effects test guidelines to 40 CFR part 799. These 17 new guidelines are listed in the following table 1 with the OPPTS harmonized guideline from which it was developed:

TABLE 1

| New TSCA test guideline name (and cite) | Original OPPTS harmonized guideline name (and cite) |
|---|---|
| TSCA partition coefficient (n-octanol/water) shake flask method (799.6755). | Partition coefficient (n-octanol/H2O) shake flask method (830.7550) |
| TSCA partition coefficient (n-octanol/water), generator column method (799.6756). | Partition coefficient (n-octanol/H2O), generator column method (830.7560) |
| TSCA water solubility: Column elution method; shake flask method (799.6784). | Water solubility: Column elution method; shake flask method (830.7840) |
| TSCA water solubility, generator column method (799.6786) | Water solubility, generator column method (830.7860) |
| TSCA acute oral toxicity (799.9110) | Acute oral toxicity (870.1100) |
| TSCA acute dermal toxicity (799.9120) | Acute dermal toxicity (870.1200) |
| TSCA acute inhalation toxicity (799.9130) | Acute inhalation toxicity (870.1300) |
| TSCA repeated dose 28-day oral toxicity study in rodents (799.9305) | Repeated dose 28-day oral toxicity study in rodents (870.3050) |
| TSCA 90-day oral toxicity in rodents (799.9310) | 90-day oral toxicity in rodents (870.3100) |
| TSCA 90-day dermal toxicity (799.9325) | 90-day dermal toxicity (870.3250) |
| TSCA reproduction/developmental toxicity screening test (799.9355) | Reproduction/developmental toxicity screening test (870.3550) |
| TSCA combined repeated dose toxicity study with the reproduction/developmental toxicity screening test (799.9365). | Combined repeated dose toxicity study with the reproduction/developmental toxicity screening test (870.3650) |
| TSCA chronic toxicity (799.9410) | Chronic toxicity (870.4100) |
| TSCA combined chronic toxicity/carcinogenicity (799.9430) | Combined chronic toxicity/carcinogenicity (870.4300) |
| TSCA *in vitro* mammalian chromosome aberration test (799.9537) | *In vitro* mammalian chromosome aberration test (870.5375) |
| TSCA developmental neurotoxicity (799.9630) | Developmental neurotoxicity (870.6300) |
| TSCA metabolism and pharmacokinetics (799.9748) | Metabolism and pharmacokinetics (870.7485) |

## IV. How are the New TSCA Test Guidelines Different From the OPPTS Harmonized Test Guideline From Which they were Derived?

EPA developed the TSCA test guideline from the original OPPTS test guideline shown in the right column of table 1 in Unit III. In keeping with the policy of using a unified set of test guidelines across OPPTS, only minimal changes were made to the OPPTS harmonized guidelines in the development of the TSCA guidelines. These minimal changes consisted of deleting references to FIFRA in the TSCA guidelines, where it was believed by the Agency to be irrelevant to the purpose of the TSCA test guideline, and to specify those provisions of the guidelines which the Agency believed must be made mandatory in order to ensure the integrity of any data produced by the test.

EPA sumarizes below, guideline-by-guideline, the changes the Agency made to the OPPTS harmonized test guideline in developing the TSCA test guideline.

*A. Section 799.6755 TSCA Partition Coefficient (n-octanol/water), Shake Flask Method*

1. EPA deleted references to FIFRA.
2. EPA made several grammatical changes.
3. EPA deleted references which were unavailable.

*B. Section 799.6756 TSCA Partition Coefficient (n-octanol/water), Generator Column Method*

1. EPA deleted references to FIFRA.
2. EPA made several grammatical changes.
3. EPA deleted references which were unavailable.

*C. Section 799.6784 TSCA Water Solubility; Column Elution Method; Shake Flask Method*

1. EPA deleted references to FIFRA.
2. EPA made several grammatical changes.
3. EPA deleted references which were unavailable.

*D. Section 799.6786 TSCA, Water Solubility, Generator Column Method*

1. EPA deleted references to FIFRA.
2. EPA made several grammatical changes.
3. EPA deleted references which were unavailable.

*E. Section 799.9110 TSCA Acute Oral Toxicity*

1. EPA clarified those provisions describing alternative acute testing procedures. EPA acknowledges that both the current OPPTS harmonized guideline and international consideration of acute toxicity guidelines are in a period of transition toward specifying reduced animal testing requirements.
2. EPA deleted references to FIFRA and discussions of pesticides.
3. EPA added ''musts'' to those requirements deemed critical to the successful production of scientifically-valid data for Agency risk assessment purposes.

*F. Section 799.9120 TSCA Acute Dermal Toxicity*

1. EPA deleted references to FIFRA and discussions of pesticides.
2. EPA added ''musts'' to those requirements deemed critical to the successful production of scientifically-valid data for Agency risk assessment purposes.

*G. Section 799.9130 TSCA Acute Inhalation Toxicity*

1. EPA deleted references to FIFRA and discussions of pesticides.
2. EPA added ''musts'' to those requirements deemed critical to the successful production of scientifically-valid data for Agency risk assessment purposes.
3. EPA revised and reorganized certain narrative sections for consistency with the comparable sections in the previously-promulgated 40 CFR 799.9135 (TSCA acute inhalation toxicity with histopathology).

*H. Section 799.9305 TSCA Repeated Dose 28-day Oral Toxicity Study in Rodents*

1. EPA deleted references to FIFRA and discussions of pesticides.
2. EPA made editorial changes to text to ensure consistency with the TSCA series of guidelines.

*I. Section 799.9310 TSCA 90-day Oral Toxicity in Rodents*

1. EPA deleted references to FIFRA and discussions of pesticides.
2. EPA added ''musts'' to those requirements deemed critical to the successful production of scientifically-valid data for Agency risk assessment purposes.
3. EPA removed the included neurotoxicity testing provisions in paragraphs (e)(8)(ii) through (e)(8)(v) because TSCA practice is to specify the more detailed neurotoxicity testing provisions of 40 CFR 799.9620.

*J. Section 799.9325 TSCA 90-day Dermal Toxicity*

1. EPA deleted references to FIFRA and discussions of pesticides.
2. EPA added ''musts'' to those requirements deemed critical to the successful production of scientifically-valid data for Agency risk assessment purposes.
3. EPA removed the included neurotoxicity testing provisions in paragraphs (e)(9)(ii) through (e)(9)(v) because TSCA practice is to specify the more detailed neurotoxicity testing provisions of 40 CFR 799.9620.
4. EPA deleted references which were unavailable.

*K. Section 799.9355 TSCA Reproduction/Developmental Toxicity Screening Test*

1. EPA deleted references to FIFRA and discussions of pesticides.
2. EPA made editorial changes to text to ensure consistency with the TSCA series of guidelines.

*L. Section 799.9365 TSCA Combined Repeated Dose Toxicity Study With the Reproduction/Developmental Toxicity Screening Test*

1. EPA deleted references to FIFRA and discussions of pesticides.
2. EPA made editorial changes to text to ensure consistency with the TSCA series of guidelines.

*M. Section 799.9410 TSCA Chronic Toxicity*

1. EPA deleted references to FIFRA and discussions of pesticides.
2. EPA removed recommendations for the use of particular non-rodent species.

*N. Section 799.9430 TSCA Combined Chronic Toxicity/Carcinogenicity*

1. EPA deleted references to FIFRA and discussions of pesticides.
2. EPA added ''musts'' to those requirements deemed critical to the successful production of scientifically-valid data for Agency risk assessment purposes.
3. EPA removed the included neurotoxicity testing provisions in paragraphs (e)(7)(ii)through (e)(7)(v) because TSCA practice is to specify the more detailed neurotoxicity testing provisions of 40 CFR 799.9620.
4. EPA deleted references which were unavailable.
5. EPA added a new provision (paragraph (e)(5)(ii)(J)) requiring that care be taken when the physical and chemical properties of the test substance show a low flash point or is otherwise known or thought to be explosive.

*O. Section 799.9537 TSCA in vitro Mammalian Chromosome Aberration Test*

1. EPA deleted references to FIFRA.
2. EPA made several provisions mandatory by specifying ''must'' instead of ''should.''

3. EPA clarified the regulatory text in citing particular references in the standard.

*P. Section 799.9630 TSCA Developmental Neurotoxicity*

1. EPA deleted references to FIFRA.
2. EPA made several provisions mandatory by specifying ''must'' instead of ''should.''

*Q. Section 799.9748 TSCA Metabolism and Pharmacokinetics*

1. EPA deleted references to FIFRA.
2. EPA made several provisions mandatory by specifying ''must'' instead of ''should.''

## V. Regulatory Assessment Requirements

*A. Why is this Action Being Issued as a Final Rule?*

EPA is publishing this action as a final rule without prior notice and an opportunity to comment because the Agency believes that providing notice and an opportunity to comment is unnecessary. The test guidelines codified in this document by themselves have no substantive effect on any person until and unless the test guidelines are incorporated in a test rule promulgated under TSCA section 4. Before any such test rule is promulgated, EPA will provide notice and an opportunity to comment on the incorporation of a particular test guideline into a specific test rule. In addition, the process for developing and amending the harmonized test guidelines includes broad public participation and extensive involvement of the scientific community. EPA therefore finds that there is ''good cause'' under section 553(b)(3)(B) of the Administrative Procedure Act (APA) (5 U.S.C. 553(b)(3)(B)) to codify these test guidelines without prior notice and comment, and that this rule may be made effective immediately, without a 30 day delay, pursuant to 5 U.S.C. 553(d)(3).

*B. Do the Regulatory Assessment Requirements Apply to this Action?*

No. As indicated previously, this final rule does not impose any requirements. It only incorporates test guidelines into the TSCA series of test guidelines that are published in the CFR and which would be considered for potential incorporation in a future test rule that would be proposed under TSCA section 4. At which time potentially affected entities are afforded an opportunity to comment on the incorporation of a particular test guideline into a specific test rule.

As such, this is not a ''significant regulatory action'' that requires review by the Office of Management and Budget (OMB) under Executive Order 12866, entitled *Regulatory Planning and Review* (58 FR 51735, October 4, 1993).

Since this action is not ''economically significant'' as defined by section 3(f) of Executive Order 12866, this action is not subject to Executive Order 13045, entitled *Protection of Children from Environmental Health Risks and Safety Risks* (62 FR 19885, April 23, 1997).

This action will not result in environmental justice related issues and does not, therefore, require special consideration under Executive Order 12898, entitled *Federal Actions to Address Environmental Justice in Minority Populations and Low-Income Populations* (59 FR 7629, February 16, 1994).

Since the Agency has made a ''good cause'' finding that this action is not subject to notice-and-comment requirements under the APA or any other statute (see Unit V.A.), this action is not subject to the regulatory flexibility provisions of the Regulatory Flexibility Act (RFA) (5 U.S.C. 601 *et seq.*), or to sections 202 and 205 of the Unfunded Mandates Reform Act of 1995 (UMRA) (Public Law 104–4). In addition, this action does not significantly or uniquely affect small governments or impose a significant intergovernmental mandate, as described in sections 203 and 204 of UMRA. Nor does this action significantly or uniquely affect the communities of tribal governments as specified by Executive Order 13084, entitled *Consultation and Coordination with Indian Tribal Governments* (63 FR 27655, May 10, 1998). This rule will not have substantial direct effects on the States, on the relationship between the national government and the States, or on the distribution of power and responsibilities among the various levels of government, as specified in Executive Order 13132, entitled *Federalism* (64 FR 43255, August 10, 1999).

This rule does not contain any information collection requirements that require review and approval by OMB pursuant to the Paperwork Reduction Act of 1995 (PRA) (44 U.S.C. 3501 *et seq.*).

In issuing this rule, EPA has taken the necessary steps to eliminate drafting errors and ambiguity, minimize potential litigation, and provide a clear legal standard for affected conduct, as required by section 3 of Executive Order 12988, entitled *Civil Justice Reform* (61 FR 4729, February 7, 1996).

EPA has also complied with Executive Order 12630, entitled *Governmental Actions and Interference with Constitutionally Protected Property Rights* (53 FR 8859, March 15, 1988), by examining the takings implications of this rule in accordance with the ''Attorney General's Supplemental Guidelines for the Evaluation of Risk and Avoidance of Unanticipated Takings'' issued under the Executive Order.

*C. Are there Any Applicable Voluntary Consensus Standards?*

No. Section 12(d) of the National Technology Transfer and Advancement Act of 1995 (NTTAA), Public Law 104–113, section 12(d) (15 U.S.C. 272 note), directs EPA to use voluntary consensus standards in its regulatory activities unless to do so would be inconsistent with applicable law or otherwise impractical. Voluntary consensus standards are technical standards (e.g., materials specifications, test methods, sampling procedures, business practices, etc.) that are developed or adopted by voluntary consensus standards bodies. The NTTAA requires EPA to provide an explanation to Congress, through OMB, when the Agency decides not to use available and applicable voluntary consensus standards when the NTTAA directs the Agency to do so.

As indicated earlier, this final rule does not impose any obligations on anyone until the test guidelines are incorporated in a test rule promulgated under TSCA section 4. Before any such test rule is promulgated, EPA will provide notice and an opportunity to comment on the incorporation of a particular test guideline into that specific test rule, including the availability of applicable voluntary consent standards.

In addition, although the NTTAA requirements do not specifically apply to the issuance of the harmonized test guidelines, EPA has sought comments on the availability of applicable voluntary consensus standards that should be considered during the development of future rules under TSCA. This allows the Agency to consider such standards during the development of the harmonized test guidelines, upon which the TSCA test guidelines are based.

## VI. Submission to Congress and the Comptroller General

The Congressional Review Act, 5 U.S.C. 801 *et seq.*, as added by the Small Business Regulatory Enforcement Fairness Act of 1996, generally provides that before a rule may take effect, the agency promulgating the rule must submit a rule report, which includes a

copy of the rule, to each House of the Congress and to the Comptroller General of the United States. Section 808 allows the issuing agency to make a good cause finding that notice and public procedure is impracticable, unnecessary or contrary to the public interest. This determination must be supported by a brief statement. 5 U.S.C. 808(2). EPA has made such a good cause finding for this final rule, and established an effective date of December 15, 2000. Pursuant to 5 U.S.C. 808(2), this determination is supported by the brief statement in Unit V.A. EPA will submit a report containing this final rule and other required information to the U.S. Senate, the U.S. House of Representatives, and the Comptroller General of the United States prior to publication of the rule in the **Federal Register**. This is not a ''major rule'' as defined by 5 U.S.C. 804(2).

**List of Subjects in 40 CFR Part 799**

Environmental protection, Chemicals, Hazardous substances, Health, Reporting and recordkeeping requirements.

Dated: November 27, 2000.

**Susan H. Wayland,**

*Acting Assistant Administrator for Prevention, Pesticides and Toxic Substances.*

Therefore, 40 CFR part 799 is amended as follows:

## PART 799—[AMENDED]

1. The authority citation for part 799 continues to read as follows:

**Authority:** 15 U.S.C. 2603, 2611, 2625.

2. A new subpart E, consisting of §§ 799.6755 to 799.6786 is added to read as follows:

### Subpart E—Product Properties Test Guidelines

Sec.

799.6755 TSCA partition coefficient (*n*-octanol/water), shake flask method.
799.6756 TSCA partition coefficient (*n*-octanol/water), generator column method.
799.6784 TSCA water solubility: Column elution method; shake flask method.
799.6786 TSCA water solubility: Generator column method.

### Subpart E—Product Properties Test Guidelines

#### § 799.6755 TSCA partition coefficient (*n*-octanol/water), shake flask method.

(a) *Scope*—(1) *Applicability.* This section is intended to meet the testing requirements of the Toxic Substances Control Act (TSCA) (15 U.S.C. 2601).

(2) *Source.* The source material used in developing this TSCA test guideline is the Office of Prevention, Pesticides and Toxics (OPPTS) harmonized test guideline 830.7550 (August 1996, final guideline). The source is available at the address in paragraph (f) of this section.

(b) *Introductory information*—(1) *Prerequisites.* Suitable analytical method, dissociation constant, water solubility, and hydrolysis (preliminary test).

(2) *Coefficient of variation.* The coefficient of variation on the mean values reported by the participants of the Organization for Economic Coopertion and Development (OECD) Laboratory Intercomparison Testing, Part I, 1979, appeared to be dependent on the chemicals tested; it ranges from 0.17 to 1.03.

(3) *Qualifying statements.* This method applies only to pure, water soluble substances which do not dissociate or associate, and which are not surface active. In order to use the partition coefficient (P) as a screening test for bioaccumulation, it should be ascertained that the impurities in the commercial product are of minor importance. Testing of P (*n*-octanol/water) cannot be used as a screening test in the case of organometallic compounds.

(4) *Alternative methods.* High-pressure liquid chromatography (HPLC) methods described in the references in paragraphs (f)(3), (f)(4), and (f)(5) of this section may be considered as an alternative test method.

(c) *Method*—(1) *Introduction, purpose, scope, relevance, application, and limits of test.* The P of a substance between water and a lipophilic solvent (*n*-octanol) is one model variable which may be used to describe the transfer of a substance from the aquatic environment into an organism and the potential bioaccumulation of the substance. Studies show a highly significant relationship between the P of different substances in the system water/*n*-octanol and their bioaccumulation in fish described in paragraph (f)(1) of this section.

(2) *Definitions—Partition coefficient* (P) is defined as the ratio of the equilibrium concentrations ($C_i$) of a dissolved substance in a two-phase system consisting of two largely immiscible solvents. The P therefore is the quotient of two concentrations and is usually given in the form of its logarithm to base 10 (log P). In this case *n*-octanol and water:

*Equation 1:*

$$P_{ow} = C_{n\text{-octanol}}/C_{water}$$

(3) *Reference substances.* The reference substances need not be employed in all cases when investigating a new substance. They are provided primarily so that calibration of the method may be performed from time to time and to offer the chance to compare the results when another method is applied. The values presented in table 1 of this section are not necessarily representative of the results which can be obtained with this test method as they have been derived from an earlier version of the test guideline.

TABLE 1.—DATA FOR REFERENCE SUBSTANCES

| Tested substance [1] | $P_{ow}$ [2] | |
|---|---|---|
| Di(2-ethylhexyl)phthalate (OECD) | $1.3 \times 10^5$ | ($4.6 \times 10^4 - 2.8 \times 10^5$) |
| Hexachlorobenzene (OECD) | $3.6 \times 10^5$ | ($1.1 \times 10^5 - 8.3 \times 10^5$) |
| *o*-Dichlorobenzene European Economic Community (EEC) | $5.1 \times 10^3$ | ($1.5 \times 10^3 - 2.3 \times 10^4$) |
| Dibutyl phthalate (EEC) | $1.3 \times 10^4$ | ($1.7 \times 10^3 - 2.8 \times 10^4$) |
| Trichloroethylene (OECD) | $2.0 \times 10^3$ | ($5.2 \times 10^2 - 3.7 \times 10^3$) |
| Urea (OECD) | $6.2 \times 10^{-2}$ | ($2.0 \times 10^{-2}$—$2.4 \times 10^{-1}$) |

[1] Substances not tested: Ethyl acetate, 4-methyl-2,4-pentanediol.
[2] Total, mean, and range of mean values (in parentheses) submitted by the participants of the OECD or EEC Laboratory Intercomparison Testing.

(4) *Principle of the test method.* In order to determine a P, equilibrium between all interacting components of the system must be achieved, and the concentrations of the substances dissolved in the two phases must be determined. A study of the literature on this subject indicates that there are many different techniques which can be

used to solve this problem, i.e. the thorough mixing of the two phases followed by their separation in order to determine the equilibrium concentration for the substance being examined.

(5) *Quality criteria*—(i) *Repeatability.* In order to assure the precision of the P, duplicate determinations are to be made under three different test conditions, whereby the quantity of substance specified as well as the ratio of the solvent volumes may be varied. The determined values of the P expressed as their common logarithms should fall within a range of ±0.3 log units.

(ii) *Sensitivity.* The sensitivity of the method is determined by the sensitivity of the analytical procedure. This should be sufficient to permit the assessment of values of $P_{ow}$ up to 105 when the concentration of the solute in either phase is not more than 0.01 mol/Liter (L). The substance being tested must not be water insoluble (mass concentration $\rho \leq 10^{-6}$ gram (g)/L.

(iii) *Specificity.* The Nernst Partition Law applies only at constant temperature, pressure, and pH for dilute solutions. It strictly applies to a pure substance dispersed between two pure solvents. If several different solutes occur in one or both phases at the same time, this may affect the results. Dissociation or association of the dissolved molecules result in deviations from the Nernst Partition Law. Such deviations are indicated by the fact that the P becomes dependent upon the concentration of the solution. Because of the multiple equilibria involved, this test guideline should not be applied to ionizable compounds without corrections being made. The use of buffer solutions in place of water should be considered for such compounds.

(iv) *Possibility of standardization.* This method can be standardized.

(d) *Description of the test procedure*—(1) *Preparations: Preliminary estimate of the P.* The size of the P can be estimated either by means of calculation or by use of published solubilities of the test substance in the pure solvents. Alternatively, it may be roughly determined by performing a simplified preliminary test. For this:

*Equation 2:*

$$P_{estimate} = (\text{saturation } C_{n\text{-octanol}})/(\text{saturation } C_{water})$$

(2) *Preparation of the solvents*—(i) *n-Octanol.* The determination of the P should be carried out with analytical grade *n*-octanol. Inorganic contaminants can be removed from commercial *n*-octanol by washing with acid and base, drying, and distilling. More sophisticated methods will be required to separate the *n*-octanol from organic contaminants with similar vapor pressure if they are present.

(ii) *Water.* Distilled water or water twice-distilled from glass or quartz apparatus should be employed. Water taken directly from an ion exchanger should not be used.

(iii) *Presaturation of the solvents.* Before a P is determined, the phases of the solvent system are mutually saturated by shaking at the temperature of the experiment. For doing this, it is practical to shake two large stock bottles of purified *n*-octanol or distilled water each with a sufficient quantity of the other solvent for 24 hours on a mechanical shaker, and then to let them stand long enough to allow the phases to separate and to achieve a saturation state.

(3) *Preparation for the test.* The entire volume of the two-phase system should nearly fill the test vessel. This will help prevent loss of material due to volatilization. The volume ratio and quantities of substance to be used are fixed by the following:

(i) The preliminary assessment of the P as discussed in paragraph (d)(1) of this section).

(ii) The minimum quantity of test substance required for the analytical procedure.

(iii) The limitation of a maximum concentration in either phase of 0.01 mol/L.

(iv) Three tests are carried out. In the first, the calculated volume ratio is added; in the second, twice the volume of *n*-octanol is added; and in the third, half the volume of *n*-octanol is added.

(4) *Test substance.* The test substance should be the purest available. For a material balance during the test a stock solution is prepared in *n*-octanol with a mass concentration between 1 and 100 milligram/milliliter (mg/mL). The actual mass concentration of this stock solution should be precisely determined before it is employed in the determination of the P. This solution should be stored under stable conditions.

(5) *Test conditions.* The test temperature should be kept constant (±1 °C) and lie in the range of 20–25 °C.

(6) *Performance of the test*—(i) *Establishment of the partition equilibrium.* Duplicate test vessels containing the required, accurately measured amounts of the two solvents together with the necessary quantity of the stock solution should be prepared for each of the test conditions. The *n*-octanol parts should be measured by volume. The test vessels should either be placed in a suitable shaker or shaken by hand. A recommended method is to rotate the centrifuge tube quickly through 180° about its transverse axis so that any trapped air rises through the two phases. Experience has shown that 50 such rotations are usually sufficient for the establishment of the partition equilibrium. To be certain, 100 rotations in 5 minutes are recommended.

(ii) *Phase separation.* In order to separate the phases, centrifugation of the mixture should be carried out. This should be done in a laboratory centrifuge maintained at room temperature, or, if a non-temperature-controlled centrifuge is used, the centrifuge tubes should be reequilibrated at the test temperature for at least 1 hour before analysis.

(7) *Analysis.* (i) For the determination of the P, it is necessary to analyze the concentrations of the test substance in both phases. This may be done by taking an aliquot of each of the two phases from each tube for each test condition and analyzing them by the chosen procedure. The total quantity of substances present in both phases should be calculated and compared with the quantity of the substance originally introduced.

(ii) The aqueous phase should be sampled by the following procedure to minimize the risk of including traces of the *n*-octanol: A glass syringe with a removable needle should be used to sample the water phase. The syringe should initially be partially filled with air. Air should be gently expelled while inserting the needle through the *n*-octanol layer. An adequate volume of aqueous phase is withdrawn into the syringe. The syringe is quickly removed from the solution and the needle detached. The contents of the syringe may then be used as the aqueous sample.

(iii) The concentration in the two-separated phases should preferably be determined by a substance-specific method. Examples of physical-chemical

determinations which may be appropriate are:

(A) Photometric methods.

(B) Gas chromatography.

(C) HPLC.

(D) Back-extraction of the aqueous phase and subsequent gas chromatography.

(e) *Data and reporting*—(1) *Treatment of results.* The reliability of the determined values of P can be tested by comparison of the means of the duplicate determinations with the overall mean.

(2) *Test report.* The following should be included in the report:

(i) Name of the substance, including its purity.

(ii) Temperature of the determination.

(iii) The preliminary estimate of the P and its manner of determination.

(iv) Data on the analytical procedures used in determining concentrations.

(v) The measured concentrations in both phases for each determination. This means that a total of 12 concentrations must be reported.

(vi) The weight of the test substance, the volume of each phase employed in each test vessel, and the total calculated amount of test substance present in each phase after equilibration.

(vii) The calculated values of the P and the mean should be reported for each set of test conditions as should the mean for all determinations. If there is a suggestion of concentration dependency of the P, this should be noted in the report.

(viii) The standard deviation of individual P values about their mean should be reported.

(ix) The mean P from all determinations should also be expressed as its logarithm (base 10).

(f) *References.* For additional background information on this test guideline, the following references should be consulted. These references are available from the TSCA Nonconfidential Information Center, Rm. NE–B607, Environmental Protection Agency, 401 M St., SW., Washington, DC, 12 noon to 4 p.m., Monday through Friday, excluding legal holidays.

(1) Neely, W.B. et al. Partition Coefficients to Measure Bioconcentration Potential of Organic Chemicals in Fish. *Environmental Science and Technology* 8:1113 (1974).

(2) Leo, A. et al. Partition Coefficients and Their Uses. *Chemical Reviews* 71:525 (1971).

(3) Miyake, K. and H. Terada, Direct measurements of partition coefficients in an octanol-water system. *Journal of Chromatography* 157:386 (1978).

(4) Veith G.D. and R.T. Morris, A Rapid Method for Estimating Log P for Organic Chemicals, EPA–600/3–78–049 (1978).

(5) Mirrless, M.S. et al., Direct measurement of octanol-water partition coefficient by high pressure liquid chromatography. *Journal of Medicinal Chemistry* 19:615 (1976).

(6) EPA Draft Guidance of September 8, 1978 (F–16).

(7) Konemann H. et al. Determination of log $P_{oct}$ values of chlorosubstituted benzenes, toluenes, and anilines by high performance liquid chromatography on ODS silica, *Journal of Chromatography* 178:559 (1979).

(8) *Organization for Economic Cooperation and Development*, Guidelines for The Testing of Chemicals, OECD 107, Partition Coefficient (*n*-octanol/water) (Shake Flask Method, Adopted 27 July 1995), OECD, Paris, France.

**§ 799.6756 TSCA partition coefficient (*n*-octanol/water), generator column method.**

(a) *Scope*—(1) *Applicability.* This section is intended to meet the testing requirements of the Toxic Substances Control Act (TSCA) (15 U.S.C. 2601).

(2) *Source.* The source material used in developing this TSCA test guideline is the Office of Pollution Prevention, Pesticides and Toxic Substances (OPPTS) harmonized test guideline 830.7560 (August 1996, final guideline). This source is available at the address in paragraph (e) of this section.

(b) (1) *Purpose.* (i) The measurement and estimation of the *n*-octanol/water partition coefficient ($K_{ow}$), has become the cornerstone of a myriad of structure-activity relationships (SAR) property. The coefficient has been used extensively for correlating structural changes in drugs with changes observed in biological, biochemical, or toxic effects. These correlations are then used to predict the effect of a new drug for which a $K_{ow}$ could be measured.

(ii) In the study of the environmental fate of organic chemicals, the $K_{ow}$ has become a key parameter. $K_{ow}$ is correlated to water solubility, soil/sediment sorption coefficient, and bioconcentration and is important to SAR.

(iii) Of the three properties that can be estimated from $K_{ow}$, water solubility is the most important because it affects both the fate and transport of chemicals. For example, highly soluble chemicals become quickly distributed by the hydrologic cycle, have low-sorption coefficients for soils and sediments, and tend to be more easily degraded by microorganisms. In addition, chemical transformation processes such as hydrolysis, direct photolysis, and indirect photolysis (oxidation) tend to occur more readily if a compound is soluble.

(iv) Direct correlations between $K_{ow}$ and both the soil/sediment sorption coefficient and the bioconcentration factor are to be expected. In these cases, compounds that are more soluble in *n*-octanol (more hydrophobic and lipophilic) would be expected to partition out of the water and into the organic portion of soils/sediments and into lipophilic tissue. The relationship between $K_{ow}$ and the bioconcentration factor, are the principal means of estimating bioconcentration factors. This relationship is discussed in the reference listed in paragraph (e)(14) of this section. These factors are then used to predict the potential for a chemical to accumulate in living tissue.

(v) This section describes a method for determining the $K_{ow}$ based on the dynamic coupled column liquid chromatographic (DCCLC) technique, a technique commonly referred to as the generator column method. The method described herein can be used in place of the standard shake-flask method specified in § 799.6755 for compounds with a $\log_{10}K_{ow}$ greater than 1.0.

(2) *Definitions.* The following definitions apply to this section.

*Extractor column* is used to extract the solute from the aqueous solution produced by the generator column. After extraction onto a bonded chromatographic support, the solute is eluted with a solvent/water mixture and subsequently analyzed by high-performance liquid chromatography (HPLC), gas chromatography (GC), or any other analytical procedure. A detailed description of the preparation of the extractor column is given in paragraph (c)(1)(i) of this section.

*Generator column* is used to partition the test substance between the *n*-octanol and water phases. The column in figure 1 in paragraph (c)(1)(i)(A)(*2*) of this section is packed with a solid support and is coated with the test substance at a fixed concentration in *n*-octanol. The test substance is eluted from the column with water and the aqueous solution leaving the column represents the equilibrium concentration of the test substance that has partitioned from the *n*-octanol phase into the water phase. Preparation of the generator column is described in paragraph (c)(1)(i) of this section.

*n-Octanol/water partition coefficient* ($K_{ow}$) is defined as the ratio of the molar concentrations of a chemical in *n*-octanol and water, in dilute solution. The coefficient $K_{ow}$ is a constant for a given chemical at a given temperature. Since $K_{ow}$ is the ratio of two molar concentrations, it is a dimensionless

quantity. Sometimes $K_{ow}$ is reported as the decadic logarithm ($\log_{10}K_{ow}$). In this equation, $C_{octanol}$ and $C_{water}$ are the molar concentration of the solute in *n*-octanol and water, respectively, at a given temperature. This test procedure determines $K_{ow}$ at 25 ± 0.05 °C. The mathematical statement of $K_{ow}$ is:

*Equation 1:*

$$K_{ow} = C_{octanol}/C_{water}$$

*Response factor* (RF) is the solute concentration required to give a one unit area chromatographic peak or one unit output from the HPLC recording integrator at a particular recorder and detector attenuation. The factor is required to convert from units of area to units of concentration. The determination of the RF is given in paragraph (c)(3)(iii)(C)(*2*) of this section.

*Sample loop* is a 1/16 inch (in) outside diameter (O.D.) (1.6 millimeter (mm)) stainless steel tube with an internal volume between 20 and 50 µL. The loop is attached to the sample injection valve of the HPLC and is used to inject standard solutions into the mobile phase of the HPLC when determining the RF for the recording integrator. The exact volume of the loop must be determined as described in paragraph (c)(3)(iii)(C)(*1*) of this section when the HPLC method is used.

(3) *Principle of the test method.* (i) This test method is based on the DCCLC technique for determining the aqueous solubility of organic compounds. The development of this test method is described in the references listed in paragraphs (e)(6), (e)(12), and (e)(19) of this section. The DCCLC technique utilizes a generator column, extractor column, and HPLC coupled or interconnected to provide a continuous closed-flow system. Aqueous solutions of the test compound are produced by pumping water through the generator column that is packed with a solid support coated with an approximately 1.0% weight/weight (w/w) solution of the compound in *n*-octanol. The aqueous solution leaving the column represents the equilibrium concentration of the test chemical which has partitioned from the *n*-octanol phase into the water phase. The compound is extracted from the aqueous solution onto an extractor column, then eluted from the extractor column with a solvent/water mixture and subsequently analyzed by HPLC using a variable wavelength ultraviolet (UV) absorption detector operating at a suitable wavelength. Chromatogram peaks are recorded and integrated using a recording integrator. The concentration of the compound in the effluent from the generator column is determined from the mass of the compound (solute) extracted from a measured volume of water (solvent). The $K_{ow}$ is calculated from the ratio of the molar concentration of the solute in the 1.0% (w/w) *n*-octanol and molar concentration of the solute in water as determined using the generator column technique.

(ii) Since the HPLC method is only applicable to compounds that absorb in the UV, an alternate GC method, or any other reliable quantitative procedure must be used for those compounds that do not absorb in the UV. In the GC method the saturated solutions produced in the generator column are extracted using an appropriate organic solvent that is subsequently injected into the GC, or any other suitable analytical device, for analysis of the test compound.

(4) *Reference chemicals.* (i) Columns 2, 3, 4, and 5 of table 1 in paragraph (b)(4)(ii) of this section list the experimental values of the decadic logarithm of the *n*-octanol/water partition coefficient ($\log_{10}K_{ow}$) at 25 °C for a number of organic chemicals as obtained from the scientific literature. These values were obtained by any one of the following experimental methods: Shake-flask; generator column; reverse-phase HPLC; or reverse-phase thin-layer chromatography, as indicated in the footnotes following each literature citation. The estimation method of Hawker and Connell as described in paragraph (e)(8) of this section, correlates $\log_{10}K_{ow}$ with the total surface area of the molecule and was used to estimate $\log_{10}K_{ow}$ for biphenyl and the chlorinated biphenyls. These estimated values are listed in column 7 of table 1 in paragraph (b)(4)(ii) of this section. Recommended values of $\log_{10}K_{ow}$ were obtained by critically analyzing the available experimental and estimated values and averaging the best data. These recommended values are listed in column 8 of table 1 in paragraph (b)(4)(ii) of this section.

(ii) The recommended values listed in table 1 of this section have been provided primarily so that the generator column method can be calibrated and to allow the chemical laboratory the opportunity to compare its results with these values. The testing laboratory has the option of choosing its reference chemicals, but references must be given to establish the validity of the measured values of $\log_{10}K_{ow}$.

TABLE 1.—N-OCTANOL/WATER PARTITION COEFFICIENT AT 25 °C FOR SOME REFERENCE COMPOUNDS

| Chemical | Experimental $\log_{10}K_{ow}$ | | | | Estimated $\log_{10}K_{ow}$ | | Recommended $\log_{10}K_{ow}$ |
|---|---|---|---|---|---|---|---|
| | Hansch and Leo[1] | Generator Column Method | Banerjee[2] | Other values | Hansch and Leo[3] | Hawker and Connell[4] | |
| Ethyl acetate | 0.73, 0.66 | [5]0.68 | — | — | 0.671 | — | [17]0.685 |
| 1-Butanol | 0.88, 0.89, 0.32, 0.88 | [5]0.785 | — | — | 0.823 | — | [23]0.852 |
| 1-Pentanol | 1.28, 1.40 | [5]1,53 | — | — | 1.35 | — | [17]1.39 |
| Nitrobenzene | 1.85, 1.88, 1.79 | [5]1.85 | 1.83 | [6]1.82 | 1.89 | — | [17]1.84 |
| Benzene | 2.15, 2.13 | — | 2.12 | — | 2.14 | — | [17]2.14 |
| Trichloroethylene | 2.29 | [5]2.53 | 2.42 | — | 2.27 | — | [17]2.38 |
| Chlorobenzene | 2.84, 2.46 | [7]2.98 | — | [8]2.84 | 2.86 | — | [18]2.80 |
| *o*-Dichlorobenzene | 3.38 | [7]3.38 | 3.40 | [8]3.38 | 3.57 | — | [17]3.42 |
| *n*-Propylbenzene | 3.66, 3.66, 3.68, 3.57 | [5]3.69 | — | — | 3.85 | — | [17]3.69 |
| Biphenyl | 3.95, 4.17, 4.09, 4.04 | [7]3.67, [9]3.89, [10]3.79 | 4.04 | [6]3.75 | 4.03 | 4.09 | [17]3.96 |

TABLE 1.—N-OCTANOL/WATER PARTITION COEFFICIENT AT 25 °C FOR SOME REFERENCE COMPOUNDS—Continued

| Chemical | Experimental $\log_{10}K_{ow}$ | | | | Estimated $\log_{10}K_{ow}$ | | Recommended $\log_{10}K_{ow}$ |
|---|---|---|---|---|---|---|---|
| | Hansch and Leo[1] | Generator Column Method | Banerjee[2] | Other values | Hansch and Leo[3] | Hawker and Connell[4] | |
| 2-Chlorobiphenyl | — | [7]4.50, [9]4.38 | — | [10]3.90, [11]3.75, [12]4.59, [13]4.54 | — | 4.99 | [19]4.49 |
| 1,2,3,5-Tetrachlorobenzene | — | [7]4.65 | 4.46 | — | 4.99 | — | [17]4.70 |
| 2,2′-Dichlorobiphenyl | — | [9]4.90 | — | [9]4.90, [10]3.63, [11]3.55, [14]4.51, [15]5.02 | — | 4.65 | [20]4.80 |
| Pentachlorobenzene | — | [7]5.03 | 4.94 | — | 5.71 | — | [24]4.99 |
| 2,4,5-Trichlorobiphenyl | — | [7]5.51, [9]5.81 | — | [10]5.67, [10]5.86, [15]5.77 | — | 5.60 | [17]5.70 |
| 2,3,4,5-Tetrachlorobiphenyl | — | [4]6.18, [7]5.72 | — | — | — | 6.04 | [17]5.98 |
| 2,2′,4,5,5′-Pentachlorobi-phenyl | 6.11 | [9]6.50, [7]5.92 | — | [13]6.11, [12]6.85 | — | 6.38 | [17]6.31 |
| 2,2′,3,3′,6,6′-Hexachloro-biphenyl | — | [4]5.76, [7]6.63, [9]6.81 | — | — | — | 6.22 | [17]6.36 |
| 2,2′,3,3′,4,4′,6-Heptachlorobiphenyl | — | [7]6.68 | — | — | — | 7.11 | [17]6.90 |
| 2,2′,3,3′,5,5′,6,6′-Octachlorobiphenyl | — | [7]7.11, [9]7.14 | — | [12]8.42 | — | 7.24 | [21]7.16 |
| 2,2′,3,3′,4, 4′,5,6,6′-Nona-chlorobiphenyl | — | [4]7.52 | — | — | — | 7.74 | [17]7.63 |
| 2,2′,3,3′,4, 5,5′6,6′-Nona-chlorobiphenyl | — | [7]8.16 | — | — | — | 7.71 | [17]7.94 |
| Decachlorobiphenyl | — | [7]8.26, [9]8.20 | — | [12]9.60 | — | 8.18 | [22]8.21 |

[1] Hansch and Leo (1979). Shake-flask method in paragraph (e)(8) of this section.
[2] Banerjee, Yalkowski, and Valvani (1980). Shake-flask method in paragraph (e)(1) of this section.
[3] Hansch and Leo (1984). Estimates $\log_{10}K_{ow}$ using the CLogP3 computer program in paragraph (e)(9) of this section.
[4] Hawker and Connell (1988). Generator column method and an estimation method correlating $\log_{10}K_{ow}$ with the total surface area of the molecule in paragraph (e)(8) of this section.
[5] Tewari et al. (1982). Generator column method in paragraph (e)(14) of this section.
[6] Veith, Austin, and Morris (1979). Reverse-phase HPLC method in paragraph (e)(16) of this section.
[7] Miller et al. (1984). Generator column method in paragraph (e)(11) of this section.
[8] Chiou and Schmedding (1982). Shake-flask method in paragraph (e)(4) of this section.
[9] Woodburn, Doucette, and Andren (1984). Generator column method in paragraph (e)(19) of this section.
[10] Rapaport and Eisenreich (1984). Reverse-phase HPLC method in paragraph (e)(13) of this section.
[11] Woodburn (1982). Reverse-phase HPLC method in paragraph (e)(18) of this section.
[12] Bruggemann, Van der Steen, and Hutzinger (1978). Shake-flask method in paragraph (e)(2) of this section.
[13] Tulp and Hutzinger (1978). Shake-flask method in paragraph (e)(15) of this section.
[14] Chiou, Porter, and Schmedding (1983). Shake-flask method in paragraph (e)(5) of this section.
[15] Bruggemann, Van Der Steen , and Hutzinger (1982). Reverse-phase thin-layer chromatography in paragraph (e)(2) of this section.
[16] Chiou et al. (1977). Shake-flask method in paragraph (e)(3) of this section.
[17] Average value using all the data.
[18] Average value using all the data except the datum point 2.46.
[19] Average value using all the data except the data points 3.90 and 3.75.
[20] Average value using all the data except the data points 3.63 and 3.55.
[21] Average value using all the data except the datum point 8.42.
[22] Average value using all the data except the datum point 9.60.
[23] Average value using all the data except the datum point 0.32.
[24] Average value using all the data excluding the estimated datum point 5.71.

(5) *Applicability and specificity.* The test guideline is designed to determine the $K_{ow}$ of solid or liquid organic chemicals in the range $\log_{10}K_{ow}$ 1.0 to ≤6.0 (10 to ≤$10^6$).

(c) *Test procedure*—(1) *Test conditions*—(i) *Special laboratory equipment*—(A)(*1*) *Generator column.* Either of two different methods for connecting to the generator column shall be used depending on whether the eluted aqueous phase is analyzed by HPLC (Procedure A, as described in paragraph (c)(3)(iii) of this section) or by solvent extraction followed by GC analysis, or any other reliable method of solvent extract (Procedure B, as described in paragraph (c)(3)(iv) of this section).

(*2*)(*i*) The design of the generator column is shown in the following figure 1:

**Figure 1—Generator Column**

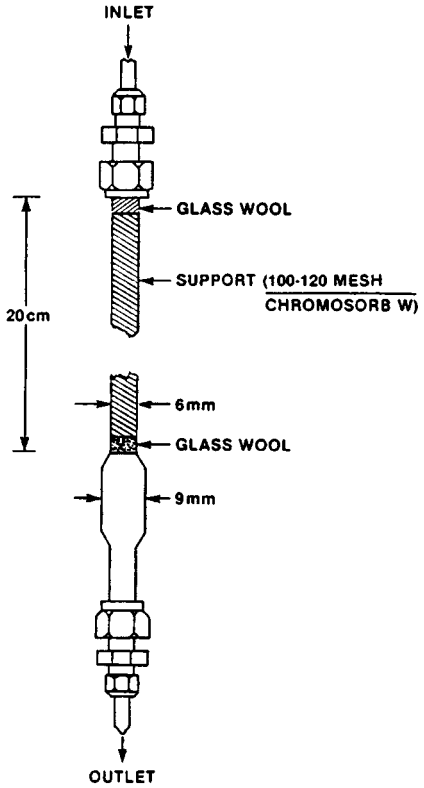


(*ii*) The column consists of a 6 mm (¼ in) O.D. pyrex tube joined to a short enlarged section of 9 mm pyrex tubing which in turn is connected to another section of 6 mm (¼ in) O.D. pyrex tubing. Connections to the inlet teflon tubing (⅛ in O.D.) and to the outlet stainless steel tubing (1/16 in O.D.) are made by means of stainless steel fittings with teflon ferrules. The column is enclosed in a water jacket for temperature control as shown in the following figure 2:

**Figure 2—Setup Showing Generator Column Enclosed in a Water Jacket and Overall Arrangement of the Apparatus Used in GC Method**

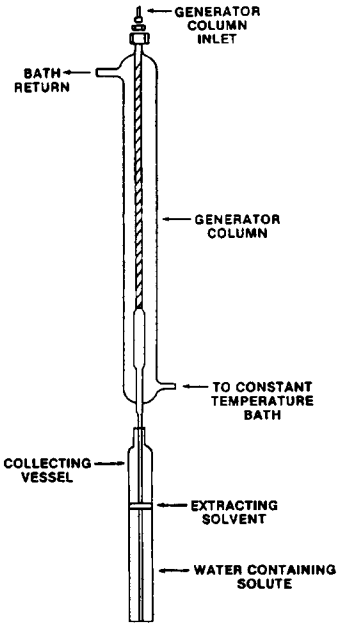


(B) Constant temperature bath with circulation pump-bath and capable of controlling temperature to 25 ±0.05 °C. (Procedures A and B, as described in paragraphs (c)(3)(iii) and (c)(3)(iv) of this section, respectively).

(C) HPLC equipped with a variable wavelength UV absorption detector operating at a suitable wavelength and a recording integrator (Procedure A, as described in paragraph (c)(3)(iii) of this section).

(D) Extractor column—6.6 × 0.6 centimeter (cm) stainless steel tube with end fittings containing 5 micron frits filled with a superficially porous phase packing (such as Bondapack $C_{18}$ Corasil: Waters Associates) (Procedure A, as described in paragraph (c)(3)(iii) of this section).

(E) Two 6-port high-pressure rotary switching valves (Procedure A, as described in paragraph (c)(3)(iii) of this section).

(F) Collection vessel—8 × ¾ in section of pyrex tubing with a flat bottom connected to a short section of ⅜ in O.D. borosilicate glass tubing. The collecting vessel is sealed with a ⅜ in teflon cap fitting (Procedure B, as described in paragraph (c)(3)(iv) of this section).

(G) GC, or any other reliable analytic equipment, equipped with a detector sensitive to the solute of interest (Procedure B, as described in paragraph (c)(3)(iv) of this section).

(ii) *Purity of n-octanol and water.* Purified *n*-octanol, described in paragraph (c)(2)(i) of this section, and water meeting appropriate American Society for Testing and Materials Type II standards, or an equivalent grade, are recommended to minimize the effects of dissolved salts and other impurities. An ASTM Type II water standard is presented in the reference listed in paragraph (e)(20) of this section).

(iii) *Purity of solvents.* It is important that all solvents used in this method be reagent or HPLC grade and contain no impurities which could interfere with the determination of the test compound.

(iv) *Reference compounds.* In order to ensure that the HPLC system is working properly, at least two of the reference compounds listed in table 1 in paragraph (b)(4)(ii) of this section should be run. Reference compounds shall be reagent or HPLC grade to avoid interference by impurities.

(2) *Preparation of reagents and solutions*—(i) *n-Octanol and water.* Very pure *n*-octanol can be obtained as follows: Wash pure *n*-octanol (minimum 98% pure) sequentially with 0.1N $H^2SO_4$, with 0.1N NaOH, then with distilled water until neutral. Dry the *n*-octanol with magnesium sulfate and distill twice in a good distillation column under reduced pressure [b.p. about 80°C at 0.27 kPa (2 torr)]. The *n*-octanol produced should be at least 99.9% pure. Alternatively, a grade equivalent to Fisher Scientific Co. No. A–402 ''Certified Octanol–1'' can be used. Reagent-grade water shall be used throughout the test procedure, such as ASTM Type II water, or an equivalent grade, as described in paragraph (c)(1)(ii) of this section.

(ii) *Presaturated water.* Prepare presaturated water with *n*-octanol to minimize the depletion of *n*-octanol from the column when measuring the $K_{ow}$of a test chemical. This is very important when the test chemical is lipophilic and the $\log_{10}K_{ow}$ ≤4.

(3) *Performance of the test.* Initially, an approximately 1.0% (w/w) solution of the test substance in *n*-octanol is prepared. Precise measurement of the solute concentration in this solution is required for the $K_{ow}$calculation. Subsequently, the 1.0% (w/w) solution is coated on the generator column and using either Procedure A or Procedure B as described in paragraphs (c)(3)(iii) and (c)(3)(iv) of this section, the molar concentration of the test substance in reagent-grade water is determined.

(i) *Test solution.* The test solution consists of an approximately 1.0% (w/w) solution of the test substance in *n*-octanol. A sufficient quantity (about 10–20 milliliter (mL)) of the test solution should be prepared to coat the generator column. The solution is prepared by accurately weighing out, using a tared

bottle, quantities of both the test substance and *n*-octanol required to make a 1.0% (w/w) solution. When the weights are measured precisely (to the nearest 0.1 milligram (mg)), knowing the density of *n*-octanol (0.827 gram (g)/mL at 25 °C), then the molar concentration of the test substance in the *n*-octanol is sufficiently accurate for the purposes of the test procedure. If desired, however, a separate analytical determination (e.g., by GC, or any other reliable analytical method) may be used to check the concentration in the test solution. If storage is required, the test solution should be kept stoppered to prevent volatilization of the test chemical.

(ii) *Test procedures.* Prior to the determination of the $K_{ow}$ of the test chemical, two procedures shall be followed:

(A) The saturated aqueous solution leaving the generator column shall be tested for the presence of an emulsion, using a Tyndall procedure (i.e. light scattering). If colloids are present, they must be removed prior to injection into the extractor column by lowering the flow rate of water.

(B) The efficiency of removal of the solute (the test chemical) by solvent extraction from the extractor column shall be determined and used in the determination of the $K_{ow}$ of the test chemical.

(iii) *Procedure A—HPLC method.* (A) Procedure A covers the determination of the aqueous solubility of compounds which absorb in the UV. Two reciprocating piston pumps deliver the mobile phase (water or solvent/water mixture) through two 6-port high-pressure rotary valves and a 30 x 0.6 cm $C_{18}$ analytical column to a UV absorption detector operating at a suitable wavelength. Chromatogram peaks are recorded and integrated with a recording integrator. One of the 6-port valves is the sample injection valve used for injecting samples of standard solutions of the solute in an appropriate concentration for determining RFs or standard solutions of basic chromate for determining the sample-loop volume. The other 6-port valve in the system serves as a switching valve for the extractor column which is used to remove solute from the aqueous solutions. The HPLC analytical system is shown schematically in the following figure 3:

**Figure 3—Schematic of HPLC—Generator Column Flow System**

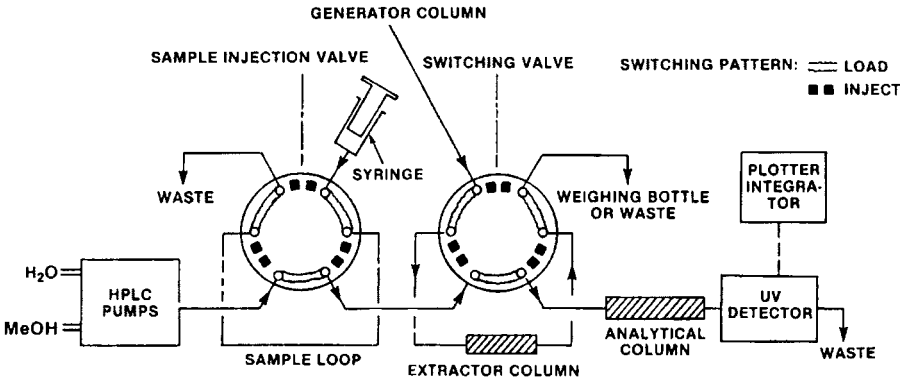


(B) The general procedure for analyzing the aqueous phase after equilibration is as follows; a detailed procedure is given in paragraph (c)(3)(iii)(C)(*4*) of this section:

(*1*) Direct the aqueous solution from the generator column to ''Waste'' in figure 3 in paragraph (c)(3)(iii)(A) of this section with the switching valve in the inject position in order to equilibrate internal surfaces with the solution, thus insuring that the analyzed sample would not be depleted by solute adsorption on surfaces upstream from the valve.

(*2*) At the same time, water is pumped from the HPLC pumps in order to displace the solvent from the extractor column.

(*3*) The switching valve is next changed to the load position to divert a sample of the solution from the generator column through the extractor column, and the liquid leaving the extractor column is collected in a tared weighing bottle. During this extraction step, the HPLC mobile phase is changed to a solvent/water mixture to condition the analytical column.

(*4*) After the desired volume of sample is extracted, the switching valve is returned to the inject position for elution from the extractor column and analysis. Assuming that all of the solute was adsorbed by the extractor column during the extraction step, the chromatographic peak represents all of the solute in the extracted sample, provided that the extraction efficiency is 100%. If the extraction efficiency is less than 100%, then the extraction efficiency shall be measured and used to determine the actual amount of the solute extracted.

(*5*) The solute concentration in the aqueous phase is calculated from the peak area, the weight of the extracted liquid collected in the weighing bottle, the extraction efficiency, and the RF.

(C)(*1*) *Determination of the sample-loop volume.* Accurate measurement of the sample loop may be accomplished by using a spectrophotometric method such as the one described in the reference listed in paragraph (e)(6) of this section. For this method, measure absorbance, $A_{loop}$, at 373 nanometers (nm) for at least three solutions, each of which is prepared by collecting from the sample valve an appropriate number, n, of loopfuls of an aqueous stock solution of $K_2CrO_4$ (1.3% by weight) and diluting to 50 mL with 0.2% KOH. (For a 20 µL loop, use n = 5; for a 50 µL loop, use n = 2.) Also measure the absorbance, $A_{stock}$, of the same stock solution after diluting 1:500 with 0.2% KOH. Calculate the loop volume to the nearest 0.1 µL using the relation:

*Equation 2:*

$$V_{loop} = \left(A_{loop}/A_{stock}\right)\left(10^{-4}/n\right)$$

(*2*) *Determination of the RF.* (*i*) For all determinations adjust the mobile phase solvent/water ratio and flow rate to obtain a reasonable retention time on the HPLC column. For example, typical concentrations of organic solvent in the mobile phase range from 50 to 100% while flow rates range from 1 to 3 mL/minutes (min); these conditions often give a 3 to 5 min retention time.

(*ii*) Prepare standard solutions of known concentrations of the solute in a suitable solvent. Concentrations must

give a recorder response within the maximum response of the detector. Inject samples of each standard solution into the HPLC system using the calibrated sample loop. Obtain an average peak area from at least three injections of each standard sample at a set detector absorbance unit full scale (AUFS), i.e., at the same absorbance scale attenuation setting.

(*iii*) Calculate the RF from the following equation:

*Equation 3:*

$$\text{Response Factor (RF)} = \frac{\text{Concentration mol/L}}{(\text{Average Area})\,(\text{AUFS})}$$

(*3*) *Loading of the generator column.* (*i*) The design of the generator column was described in paragraph (c)(1)(i) of this section and is shown in figure 1 in paragraph (c)(1)(i)(A)(*2*)(*i*) of this section. To pack the column, a plug of silanized glass wool is inserted into one end of the 6 mm pyrex tubing. Silanized diatomaceous silica support (about 0.5g of 100–120 mesh Chromosorb W chromatographic support material) is poured into the tube with tapping and retained with a second plug of silanized glass wool.

(*ii*) The column is loaded by pulling the test solution through the dry support with gentle suction and then allowing the excess solution to drain out. After loading the column, draw water up through the column to remove any entrapped air.

(*4*) *Analysis of the solute.* Use the following procedure to collect and analyze the solute:

(*i*) With the switching valve in figure 3 in paragraph (c)(3)(iii)(A) of this section in the inject position (i.e., water to waste), pump water through the generator column at a flow rate of approximately 1 mL/min for approximately 15 min to bring the system into equilibrium. Pump water to the generator column by means of a minipump or pressurized water reservoir as shown in the following figure 4:

**Figure 4—Water Reservoir for GC Method**

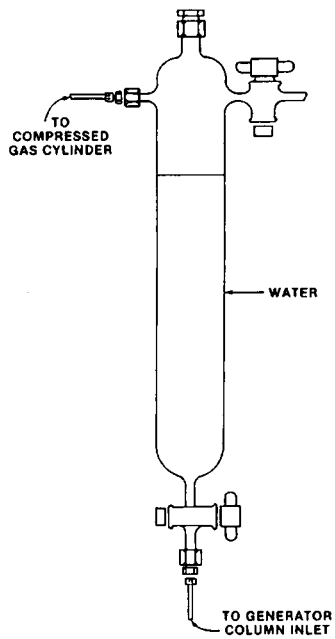


(*ii*) Flush out the organic solvent that remains in the system from previous runs by changing the mobile phase to 100% $H_2O$ and allowing the water to reach the HPLC detector, as indicated by a negative reading. As soon as this occurs, place a 25 mL weighing bottle (weighed to the nearest mg) at the waste position and immediately turn the switching valve to the load position.

(*iii*) Collect an amount of water from the generator column (as determined by trial and error) in the weighing bottle, corresponding to the amount of solute adsorbed by the extractor column that gives a reasonable detector response. During this extraction step, switch back to the original HPLC mobile phase composition, i.e., solvent/water mixture, to condition the HPLC analytical column.

(*iv*) After the desired volume of sample has been extracted, turn the switching valve back to the inject position in figure 3 in paragraph (c)(3)(iii)(A) of this section. As soon as the switching valve is turned to the inject position, remove the weighing bottle, cap it and replace it with the waste container; at the same time turn on the recording integrator. The solvent/water mobile phase will elute the solute from the extractor column and transfer the solute to the HPLC analytical column.

(*v*) Determine the weight of water collected to the nearest mg and record the corresponding peak area. Using the same AUFS setting repeat the analysis of the solute at least two more times and determine the average ratio of peak area to grams of water collected. In this equation, S = solubility (M), RF = response factor, $V_{loop}$ = sample-loop volume (L), and R = ratio of area to grams of water. Calculate the solute solubility in water using the following equation:

*Equation 4:*

$$S = (997\ \text{g/L})(\text{RF})\left(V_{loop}\right)(\text{AUFS})(\text{R})$$

(iv) *Procedure B—GC Method.* In the GC method, or any other reliable quantitative method, aqueous solutions from the generator column enter a collecting vessel in figure 2 in paragraph (c)(1)(i)(A)(*2*)(*ii*) of this section containing a known weight of extracting solvent which is immiscible in water. The outlet of the generator column is positioned such that the aqueous phase always enters below the extracting solvent. After the aqueous phase is collected, the collecting vessel is stoppered and the quantity of aqueous phase is determined by weighing. The solvent and the aqueous phase are equilibrated by slowly rotating the collecting vessel. A small amount of the extracting solvent is then removed and injected into a GC equipped with an appropriate detector. The solute concentration in the aqueous phase is determined from a calibration curve constructed using known concentrations of the solute. The extraction efficiency of the solvent shall be determined in a separate set of experiments.

(A) *Determination of calibration curve.* (*1*) Prepare solute standard solutions of concentrations covering the expected range of the solute solubility. Select a column and optimum GC operating conditions for resolution between the solute and solvent and the

solute and extracting solvent. Inject a known volume of each standard solution into the injection port of the GC. For each standard solution determine the average of the ratio R of peak area to volume (in μL) for the chromatographic peak of interest from at least three separate injections.

(*2*) After running all the standard solutions, determine the coefficients, a and b, using linear regression analysis on the equation of concentration (C) vs. R in the form:

*Equation 5:*

$$C = aR + b$$

(B) *Loading of the generator column.* The generator column is packed and loaded with solute in the same manner as for the HPLC method in paragraph (c)(3)(iii) of this section. As shown in figure 2 in paragraph (c)(1)(i)(A)(*2*)(*ii*) of this section, attach approximately 20 cm of straight stainless steel tubing to the bottom of the generator column. Connect the top of the generator column to a water reservoir in figure 4 in paragraph (c)(3)(iii)(C)(*4*)(*i*) of this section using teflon tubing. Use air or nitrogen pressure (5 PSI) from an air or nitrogen cylinder to force water from the reservoir through the column. Collect water in an Erlenmeyer flask for approximately 15 min while the solute concentration in water equilibrates; longer time may be required for less soluble compounds.

(C) *Collection and extraction of the solute.* During the equilibration time, add a known weight of extracting solvent to a collection vessel which can be capped. The extracting solvent should cover the bottom of the collection vessel to a depth sufficient to submerge the collecting tube but still maintain 100:1 water/solvent ratio. Record the weight (to the nearest mg) of a collection vessel with cap and extracting solvent. Place the collection vessel under the generator column so that water from the collecting tube enters below the level of the extracting solvent in figure 2 in paragraph (c)(1)(i)(A)(*2*)(*ii*) of this section. When the collection vessel is filled, remove it from under the generator column, replace cap, and weigh the filled vessel. Determine the weight of water collected. Before analyzing for the solute, gently rotate the collection vessel contents for approximately 30 min, controlling the rate of rotation so as not to form an emulsion; rotating the flask end over end five times per minute is sufficient. The extraction efficiency of the solvent shall be determined in a separate set of experiments.

(D) *Analysis of the solute.* (*1*) After rotating, allow the collection vessel to stand for approximately 30 min; then remove a known volume of the extracting solvent from the vessel using a microliter syringe and inject it into the GC. Record the ratio of peak area to volume injected and, from the regression equation of the calibration line, determine the concentration of solute in the extracting solvent. If the extraction efficiency is not 100%, the measured extraction efficiency shall be used to obtain the correct concentration of solute extracted. In this equation, $C_{es}$ is the molar concentration of solute in extracting solvent, $d_{H_2O}$ and $d_{es}$ are the densities in grams per milliliter of water and extracting solvent, respectively, and $g_{es}$ and $g_{H_2O}$ are the grams of extracting solvent and water, respectively, contained in the collection vessels. The molar concentration of solute in water C(M) is determined from the following equation:

*Equation 6:*

$$C(M) = \left(C_{es}\right)\left[d_{H_2O}/d_{es}\right]\left[g_{es}/g_{H_2O}\right]$$

(*2*) Make replicate injections from each collecting vessel to determine the average solute concentration in water for each vessel. To make sure the generator column has reached equilibrium, run at least two additional (for a total of three) collection vessels and analyze the extracted solute as described in paragraph (c)(3)(iv)(D)(*1*) of this section. Calculate C(M) from the average solute concentration in the three vessels.

(*3*) If another analytical method is used in place of the GC, then Procedure B, as described in paragraph (c)(3)(iv) of this section, shall be modified and the new analytical procedure shall be used to determine quantitatively the amount of solute extracted in the extraction solvent.

(v) *Analysis of reference compounds.* Prior to analyzing the test solution, make duplicate runs on at least two of the reference compounds listed in table 1 in paragraph (b)(4)(ii) of this section. When using the reference compounds, follow the same procedure previously described for preparing the test solution and running the test. If the average value obtained for each compound is within 0.1 log unit of the reference value, then the test procedure and HPLC system are functioning properly; if not a thorough checking over of the HPLC and careful adherence to the test procedures should be done to correct the discrepancy.

(vi) *Modification of procedures for potential problems—Decomposition of the test compound.* If the test compound decomposes in one or more of the aqueous solvents required during the period of the test at a rate such that an accurate value for water solubility cannot be obtained, then it will be necessary to carry out detailed transformation studies, such as hydrolysis studies. If decomposition is due to aqueous photolysis, then it will be necessary to carry out the studies in the dark, under red or yellow lights, or by any other suitable method to eliminate this transformation process.

(d) *Data and reporting*—(1) *Test report.* (i) For the test solution, report the weights to the nearest 0.1 mg of the test substance and *n*-octanol. Also report the weight percent and molar concentration of the test substance in the *n*-octanol; the density of *n*-octanol at 25 °C is 0.827 grams per milliliter (gm)/mL.

(ii) For each run provide the molar concentration of the test substance in water for each of three determinations, the mean value, and the standard deviation.

(iii) For each of the three determinations calculate the $K_{ow}$ as the ratio of the molar concentration of the test substance in *n*-octanol to the molar concentration in water. Also calculate and report the mean $K_{ow}$ and its standard deviation. Values of $K_{ow}$ shall be reported as their logarithms ($\log_{10}K_{ow}$).

(iv) Report the temperature (± 0.05 °C) at which the generator column was controlled during the test.

(v) For each reference compound report the individual values of $\log_{10}K_{ow}$ and the average of the two runs.

(vi) For compounds that decompose at a rate such that a precise value for the solubility cannot be obtained, provide a statement to that effect.

(2) *Specific analytical, calibration, and recovery procedures.* (i) For the HPLC method describe and/or report:

(A) The method used to determine the sample-loop volume and the average and standard deviation of that volume.

(B) The average and standard deviation of the RF.

(C) The extraction solvent and the extraction efficiency used.

(D) Any changes made or problems encountered in the test procedures.

(ii) For the GC method report:

(A) The column and GC operating conditions of temperature and flow rate.

(B) The average and standard deviation of the average area per microliter obtained for each of the standard solutions.

(C) The form of the regression equation obtained in the calibration procedure.

(D) The extracting solvent and extraction efficiency used.

(E) The average and standard deviation of solute concentration in each collection vessel.

(F) Any changes made or problems encountered in the test procedure.

(iii) If another approved analytical method is used to determine the concentration of the test chemical in water, then all the important test conditions shall be reported.

(iv) If the concentration of the test substance in *n*-octanol is determined by an independent analytical method such as GC, provide a complete description of the method.

(e) *References.* For additional background information on this test guideline, the following references should be consulted. These references are available from the TSCA Nonconfidential Information Center, Rm. NE–B607, Environmental Protection Agency, 401 M St., SW., Washington, DC, 12 noon to 4 p.m., Monday through Friday, excluding legal holidays.

(1) Banerjee, S. et al., Water solubility and octanol/water partition coefficient of organics. Limitation of the solubility-partition coefficient correlation. *Environmental Science and Technology* 14:1227–1229 (1980).

(2) Bruggemann W.A. et al., Reversed-phase thin-layer chromatography of polynuclear aromatic hydrocarbons and chlorinated biphenyls. Relationship with hydrophobicity as measured by aqueous solubility and octanol/water partition coefficient. *Journal of Chromatography* 238: 335–346 (1982).

(3) Chiou, C.T. et al. Partition coefficient and bioaccumulation of selected organic chemicals. *Environmental Science and Technology* 11:475–478 (1977).

(4) Chiou, C.T. and Schmedding, D.W., Partitioning of organic compounds in octanol/water systems. *Environmental Science and Technology* 16:4–10 (1982).

(5) Chiou, C.T et al., Partition equilibria of nonionic organic compounds between soil, organic matter, and water. *Environmental Science and Technology* 17:227–231 (1983).

(6) DeVoe, H. et al. ''Generator Columns and High Pressure Liquid Chromatography for Determining Aqueous Solubilities and Octanol-Water Partition Coefficients of Hydrophobic Substances,'' *Journal of Research of the National Bureau of Standards,* 86:361–366 (1981).

(7) Fujita, T. et al. ''A New Substituent Constant, Derived from Partition Coefficients.'' *Journal of the American Chemical Society,* 86:5175 (1964).

(8) Hansch, C. and Leo, A. 1985 MEDCHEM Project, version 26. Pomona College, Claremont, CA. USA.

(9) Hansch, C. and Leo, A. Medchem Software Manual. CLOGP3 Users Guide. Release 3.32. December 1984. Medicinal Chemistry Project, Pomona College, Claremont, CA.

(10) Hawker, D.W. and Connell, D.W. Octanol-water partition coefficients of polychlorinated biphenyl congeners. *Environmental Science and Technology* 22:382–387 (1988).

(11) May, W.E. et al. ''Determination of the aqueous solubility of polynuclear aromatic hydrocarbons by a coupled column liquid chromatographic technique,'' *Analytical Chemistry,* 50:175–179 (1978).

(12) May, W.E. et al. ''Determination of the Solubility Behavior of Some Polycyclic Aromatic Hydrocarbons in Water,'' *Analytical Chemistry* 50:997–1000 (1978).

(13) Miller, M.M. et al. Aqueous solubilities, octanol/water partition coefficients and entropies of melting of chlorinated benzenes and biphenyls. *Journal of Chemical and Engineering Data* 29:184–190 (1984).

(14) Neely, W.B. et al. Partition Coefficient to Measure Bioconcentration Potential of Organic Chemicals in Fish, *Environmental Science Technology*, 8:113–115 (1974).

(15) Rappaport, R.A. and Eisenrich, S.J. Chromatographic determination of octanol-water partition coefficients ($K_{ow}$'s) for 58 polychlorinated biphenyl congeners. *Environmental Science and Technology* 18:163–170 (1984).

(16) Tewari, Y.B. et al. Aqueous solubility and octanol/water partition coefficients of organic compounds at 25 °C. *Journal of Chemical and Engineering Data* 27:451–454 (1982).

(17) Tulp, M.T.M. and Hutzinger, O. Some thoughts on aqueous solubilities and partition coefficients of PCB, and the mathematical correlation between bioaccumulation and physio-chemical properties. *Chemosphere* 10:849–860 (1978).

(18) Veith, G.D. et al. A rapid method for estimating $\log_{10}$ P for organic chemicals, *Water Research* 13:43–47 (1979).

(19) Wasik, S.P. et al. Octanol/water partition coefficient and aqueous solubilities of organic compounds, Report NBSIR 81–2406 (1981). National Bureau of Standards, U.S. Department of Commerce, Washington, DC.

(20) Woodburn, K.B. Measurement and application of the octanol/water partition coefficients for selected polychlorinated biphenyls. Master's Thesis (1982), University of Wisconsin at Madison, Madison, WI.

(21) Woodburn, K.B. et al. Generator column determination of octanol/water partition coefficients for selected polychlorinated biphenyl congeners. *Environmental Science and Technology* 18:457–459 (1984).

(22) ASTM D 1193–91 (Approved Sep 15, 1991), ''Standard Specification for Reagent Water.'' American Society for Testing and Materials (ASTM), 1916 Race St., Philadelphia, PA 19103.

### § 799.6784 TSCA water solubility: Column elution method; shake flask method.

(a) *Scope*—(1) *Applicability.* This section is intended to meet the testing requirements of the Toxic Substances Control Act (TSCA) (15 U.S.C. 2601).

(2) *Source.* The source material used in developing this TSCA test guideline is the Office of Pollution Prevention, Pesticides and Toxics (OPPTS) harmonized test guideline 830.7840 (March 1998, revised final guideline). This source is available at the address in paragraph (f) of this section.

(b) *Introductory information*—(1) *Prerequisites.* Suitable analytical method, structural formula, vapor pressure curve, dissociation constant, and hydrolysis independence of pH (preliminary test).

(2) *Coefficient of variation.* The coefficient of variation on the mean values reported by the participants of the Organization for Economic Cooperation and Development (OECD) Laboratory Intercomparison Testing, Part I, 1979, appeared to be dependent on the chemicals tested and the test temperatures; it ranges from 0.05 to 0.34 for the column elution method, and from 0.03 to 1.12 for the flask method.

(3) *Qualifying statements.* (i) The method is not applicable to volatile substances. Care should be taken that the substances examined are as pure as possible and stable in water. It must be ascertained that the identity of the substance is not changed during the procedure.

(ii) The column elution method is not suitable for volatile substances. The carrier material used here may not yet be optimal. This method is intended for material with solubilities below approximately $10^{-2}$ gram/Liter (g/L).

(iii) The flask method is intended for materials with solubility above $10^{-2}$ g/L. It is not applicable to volatile substances; this method may pose difficulties in the case of surface-active materials.

(c) *Method*—(1) *Introduction, purpose, scope, relevance, application, and limits of test.* (i) A solution is a homogeneous mixture of different

substances in a solvent. The particle sizes of the dispersed substances are of the same magnitude as molecules and ions; therefore, the smallest volumes which can be obtained from a solution are always of uniform composition.

(ii) Solubility in water is a significant parameter because:

(A) The spatial and temporal movement (mobility) of a substance is largely determined by its solubility in water.

(B) Water soluble substances gain ready access to humans and other living organisms.

(C) The knowledge of the solubility in water is a prerequisite for testing biological degradation and bioaccumulation in water and for other tests.

(iii) No single method is available to cover the whole range of solubilities in water, from relatively soluble to very low-soluble chemicals. A general test guideline for the determination of the solubility in water must include methods which cover the whole range of water soluble substances. Therefore, this section includes two methods:

(A) One which applies to substances with low solubilities ($<10^{-2}$ g/L), referred to as the ''column elution method.''

(B) The other which applies to substances with higher solubilities ($\leq 10^{-2}$ g/L), referred to as the ''flask method.''

(2) *Definition.* The solubility in water of a substance is specified by the saturation mass concentration of the substance in water and is a function of temperature. The solubility in water is specified in units of weight per volume of solution. The SI-unit is killogram/meter $(kg/m)^3$; g/L may also be used.

(3) *Reference substances.* The reference substances need not be employed in all cases when investigating a new substance. They are provided primarily so that calibration of the method may be performed from time to time and to offer the chance to compare the results when another method is applied. The values presented in table 1 of this section are not necessarily representative of the results which can be obtained with this test method as they have been derived from an earlier version of the test method.

TABLE 1.—DATA FOR REFERENCE SUBSTANCES

| Method | T, °C | Mean (milligram (mg)/L) | Range (mg/L) | No. of labs |
|---|---|---|---|---|
| *Fluoranthene* | | | | |
| Elution method | 15 | 0.275 | 0.104 to 0.920 | 6 |
| | 25 | 0.373 | 0.198 to 1.050 | 7 |
| *Hexachlorobenzene* | | | | |
| Elution method | 15 | $9.21 \times 10^{-3}$ | $2.06 \times 10^{-3}$ to $2.16 \times 10^{-2}$ | 6 |
| | 25 | $9.96 \times 10^{-3}$ | $1.19 \times 10^{-3}$ to $2.31 \times 10^{-2}$ | 7 |
| *γ-Hexachlorocyclohexane* | | | | |
| Elution method | 15 | 6.50 | 4.43 to 10.5 | 6 |
| | 25 | 9.20 | 6.64 to 14.5 | 7 |
| *2,4-Dichlorophenoxyacetic acid* | | | | |
| Flask method | 15 | 0.633 | 0.380 to 0.764 | 5 |
| | 25 | 0.812 | 0.655 to 0.927 | 5 |
| *Mercury(II) chloride:* | | | | |
| Flask method | 15 | 53.0 | 47.7 to 56.5 | 4 |
| | 25 | 66.4 | 58.3 to 70.4 | 4 |
| *4-Nitrophenol:* | | | | |
| Flask method | 15 | 9.95 | 8.88 to 10.9 | 6 |
| | 25 | 14.8 | 13.8 to 15.9 | 6 |

(4) *Principle of the test methods.* The approximate amount of the sample and the time necessary to achieve the saturation mass concentration should be determined in a simple preliminary test.

(i) *Column elution method.* This method is based on the elution of a test substance with water from a microcolumn which is charged with an inert carrier material such as glass beads, silica gel, or sand, and an excess of test substance. The water solubility is determined when the mass concentration of the eluate is constant. This is shown by a concentration plateau as a function of time in the following figure 1:

**Figure 1.—Concentration versus Time of Substance in the Eluate**

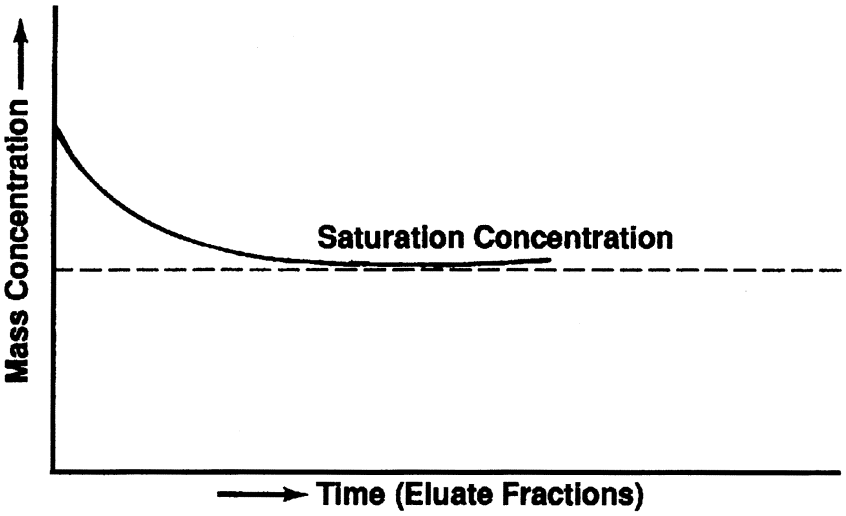


(ii) *Flask method.* In this method, the substance (solids must be pulverized) is dissolved in water at a temperature somewhat above the test temperature. When saturation is achieved, the mixture is cooled and kept at the test temperature, stirring as long as necessary to reach equilibrium. Such a procedure is described in the reference listed in paragraph (f)(2) of this section. Subsequently, the mass concentration of the substance in the aqueous solution, which must not contain any undissolved particles, is determined by a suitable analytical method.

(5) *Quality criteria*—(i) *Repeatability.* For the column elution method <30% is acceptable; for the flask method <15% should be observed.

(ii) *Sensitivity.* This depends upon the method of analysis, but mass concentration determinations down to at least $10^{-6}$ g/L can be determined.

(iii) *Specificity.* These methods should only be applied to:

(A) Pure substance.

(B) Substances that are stable in water.

(C) Slightly soluble substances, i.e. $<10^{-2}$ g/L for the column elution method.

(D) Organic substances for the column elution method.

(iv) *Possibility of standardization.* These methods can be standardized.

(d) *Description of the test procedures*—(1) *Preparations*—(i) *Apparatus*—(A) *Column elution method.* (*1*) The schematic arrangement of the system is presented in the following figure 2:

**Figure 2.—Schematic Test Arrangement**

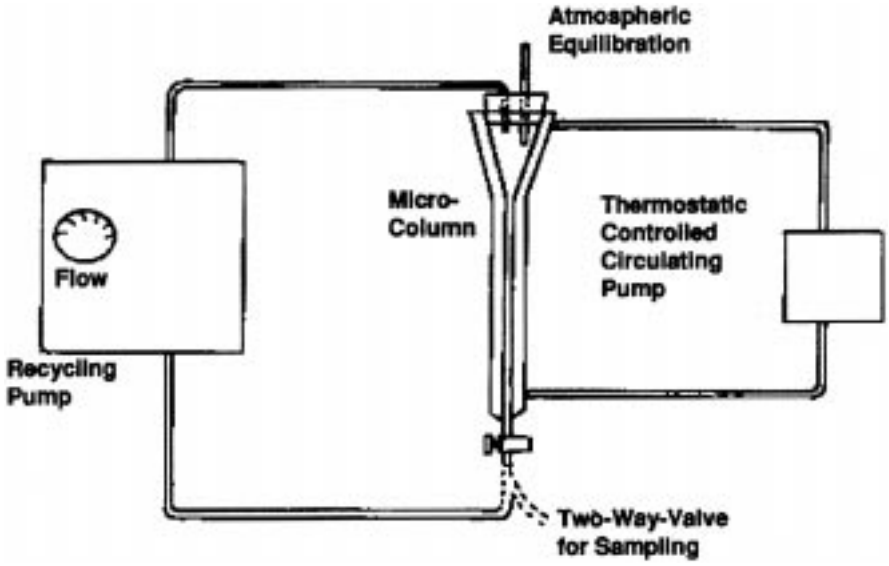


(*2*) Although any size is acceptable, provided it meets the criteria for reproducibility and sensitivity. The column should provide for a head space of at least five bed-volumes of water and a minimum of five samples. Alternatively, the size can be reduced if make-up solvent is employed to replace the initial five bed-volumes removed with impurities. A suitable microcolumn is shown in the following figure 3:

**Figure 3.—Microcolumn (all dimensions in millimeters)**

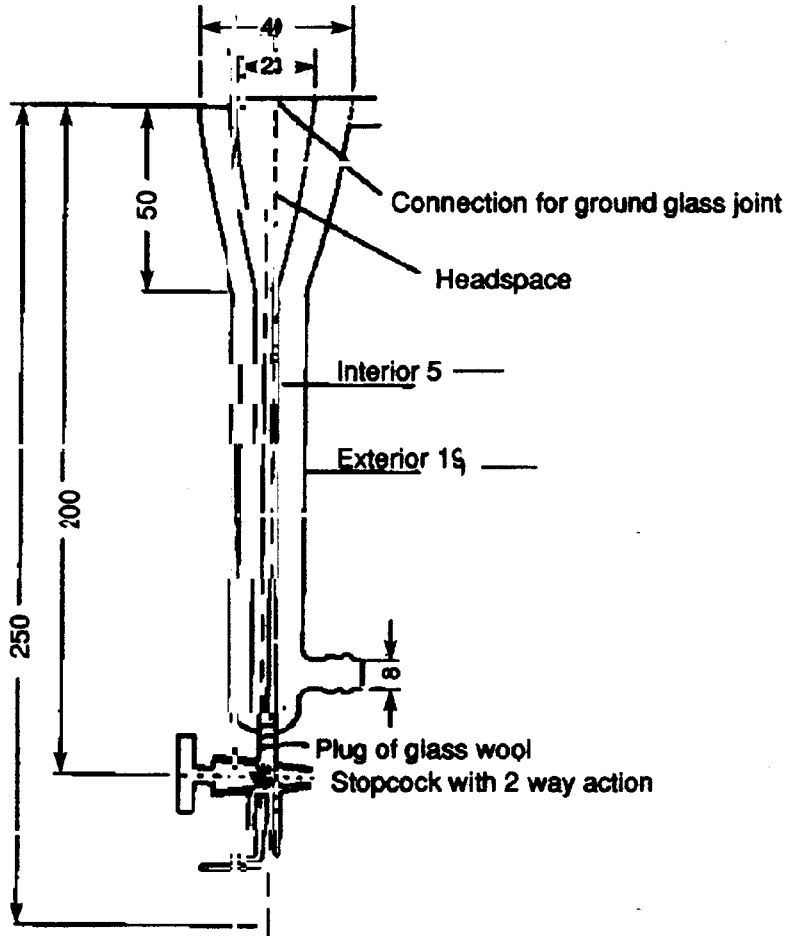


(*3*) The column should be connected to a recycling pump capable of controlling flows of approximately 25 mL/hours (h). The pump is connected with polytetrafluoroethylene and/or glass connections. The column and pump, when assembled, should have provision for sampling the effluent and equilibrating the head space at atmospheric pressure. The column material is supported with a small (5 millimeter (mm)) plug of glass wool, which must also serve to filter particles.

(B) *Flask method.* For the flask method, the following material is needed:

(*1*) Normal laboratory glassware and instrumentation.

(*2*) A device suitable for the agitation of solutions under controlled constant temperatures.

(*3*) A centrifuge (preferably thermostatted), if required with emulsions.

(*4*) Equipment for analytical determinations.

(2) *Reagents.* The substance to be tested should be as pure as possible, particularly in the flask method where purification is not provided. The carrier material for the column elution method should be inert. Possible materials which can be employed are glass beads and silica. A suitable volatile solvent of analytical reaction quality should be used to apply the test substance to the carrier material. Double distilled water from glass or quartz apparatus should be employed as the eluent or solvent. Water directly from an ion exchanger must not be used.

(3) *Test conditions.* The test is preferably run at 20 ± 0.5 °C (293 °K). If temperature dependence is suspected in the solubility (≤ 3%/°C), two other temperatures should also be used—both differing from each other and the initially chosen temperature by 10 °C. In this case the temperature control should be ± 0.1 °C. One of these additional temperatures should be below the initial temperature. The chosen temperature(s) should be kept constant in all parts of the equipment (including the leveling vessel).

(4) *Performance of the tests*—(i) *Preliminary test.* (A) To approximately 0.1 g of the sample (solid substances must be pulverized) in a glass-stoppered 10 milliliter (mL) graduated cylinder, increasing volumes of distilled water at room temperature are added according to the steps shown in Table 2 of this section:

TABLE 2.—DETERMINATION OF SOLUBILITY

| Solubility data | step 1 | step 2 | step 3 | step 4 | step 5 | step 6 | step 7 |
|---|---|---|---|---|---|---|---|
| Total volume $H_2O$ added (mL) | 0.1 | 0.5 | 1 | 2 | 10 | 100 | ≤100 |
| Approximate solubility (g/L) | ≤1,000 | 200 | 100 | 50 | 10 | 1 | <1 |

(B) After each addition of water to give the indicated total volume, the mixture is shaken vigorously for 10 min and is visually checked for any undissolved parts of the sample. If, after a total of 10 mL of water has been added (step 5), the sample or parts of it remain undissolved, the contents of the measuring cylinder is transferred to a 100 mL measuring cylinder which is then filled up with water to 100 mL (step 6) and shaken. At lower solubilities the time required to dissolve a substance can be considerably long (24 h should be allowed). The approximate solubility is given in the table under that volume of added water in which complete dissolution of the sample occurs. If the substance is still apparently insoluble, further dilution should be undertaken to ascertain whether the column elution or flask solubility method should be used.

(ii) *Column elution*—(A) *Apparatus.* (*1*) The equipment is arranged as shown in figures 2 and 3 in paragraphs (d)(1)(i)(A)(*1*) and (d)(1)(i)(A)(*2*) of this section. Approximately 600 milligrams (mg) of carrier material is weighed and transferred to a 50 mL round-bottom flask. A suitable, weighed amount of test substance is dissolved in the chosen solvent, and an appropriate amount of the test substance solution is added to the carrier material. The solvent must be completely evaporated, e.g. in a rotary evaporator; otherwise water saturation of the carrier is not achieved due to partition effects on the surface of the carrier.

(*2*) The loading of carrier material may cause problems (erroneous results) if the test substance is deposited as an oil or a different crystal phase. The problem should be examined experimentally.

(*3*) The loaded carrier material is allowed to soak for about 2 h in approximately 5 mL of water, and then the suspension is added to the microcolumn. Alternatively, dry loaded carrier material may be poured in the microcolumn, which has been filled with water and then equilibrated for approximately 2 h.

(B) *Test procedure.* The elution of the substance from the carrier material can be carried out in two different ways: Leveling vessel or circulating pump. The two principles should be used alternatively.

(*1*) Leveling vessel, see figure 3 in paragraph (d)(1)(i)(A)(*2*) and figure 4 in paragraph (d)(4)(iii) of this section.

(*i*) The connection to the leveling vessel is made by using a ground glass joint which is connected by teflon tubing. It is recommended that a flow rate of approximately 25 mL/h be used. Successive eluate fractions should be collected and analyzed by the chosen method.

(*ii*) Fractions from the middle eluate range where the concentrations are constant (± 30%) in at least five consecutive fractions are used to determine the solubility in water.

(*iii*) A second run is to be performed at half the flow rate of the first. If the results of the two runs are in agreement, the test is satisfactory; if there is a higher apparent solubility with the lower flow rate, then the halving of the flow rate must continue until two successive runs give the same solubility.

(*2*) Circulating pump, see figures 2 and 3 in paragraphs (d)(1)(i)(A)(*1*) and (d)(1)(i)(A)(*2*) of this section.

(*i*) With this apparatus, the microcolumn must be modified. A stopcock with 2–way action must be used, see figure 3 in paragraph (d)(1)(i)(A)(*2*) of this section). The circulating pump can be, e.g. a peristaltic pump (be careful that no contamination and/or adsorption occurs with the tube material) or a membrane pump.

(*ii*) The flow through the column is started. It is recommended that a flow rate of approximately 25 mL/h be used (approximately 10 bed volumes per h for the described column). The first five-bed volumes (minimum) are discarded to remove water soluble impurities.

(*iii*) Following this, the recycling pump is connected and the apparatus allowed to run until equilibration is established, as defined by five successive samples whose concentrations do not differ by more than 30% in a random fashion (see paragraph (f)(2) of this section). These samples should be separated from each other by time intervals corresponding to the passage of at least 10 bed-volumes of the eluent.

(*3*) In both cases (using a circulation pump or a leveling vessel) the fractions should be checked for the presence of colloidal matter by examination for the Tyndall effect (light scattering). Presence of such particles invalidates the results, and the test should be repeated with improvements in the filtering action of the column. The pH of each sample should be recorded. A second run should be performed at the same temperature.

(iii) *Flask method: Test procedure.* The quantity of material necessary to saturate the desired volume of water is estimated from the preliminary test. The volume of water required will depend on the analytical method and the solubility range. About five times the quantity of material determined in paragraph (d)(4)(i)(A) of this section is weighed into each of three glass vessels fitted with glass stoppers (e.g. centrifuge tubes, flasks). The chosen volume of water is added to each vessel, and the vessels are tightly stoppered. The closed vessels are then agitated at 30 °C. (A shaking or stirring device capable of operating at constant temperature should be used, *e.g.* magnetic stirring in a thermostatically controlled water bath.) After 1 day, one of the vessels is removed and re-equilibrated for 24 h at the test temperature with occasional shaking. The contents of the vessel are then centrifuged at the test temperature, and the concentration of compound in the clear aqueous phase is determined by a suitable analytical method. The other two flasks are treated similarly after initial equilibration at 30 °C for 2 and 3 days, respectively. If the concentration results from at least the last two vessels agree with the required reproducibility, the test is satisfactory. The whole test should be repeated, using longer equilibration times if the results from vessels one, two, and three show a tendency to increasing values. The arrangement of the apparatus is shown in the following figure 4:

**Figure 4.—Test Arrangement for the Determination of Solubility in Water of Slightly Soluble, Low Volatility Organic Substances**

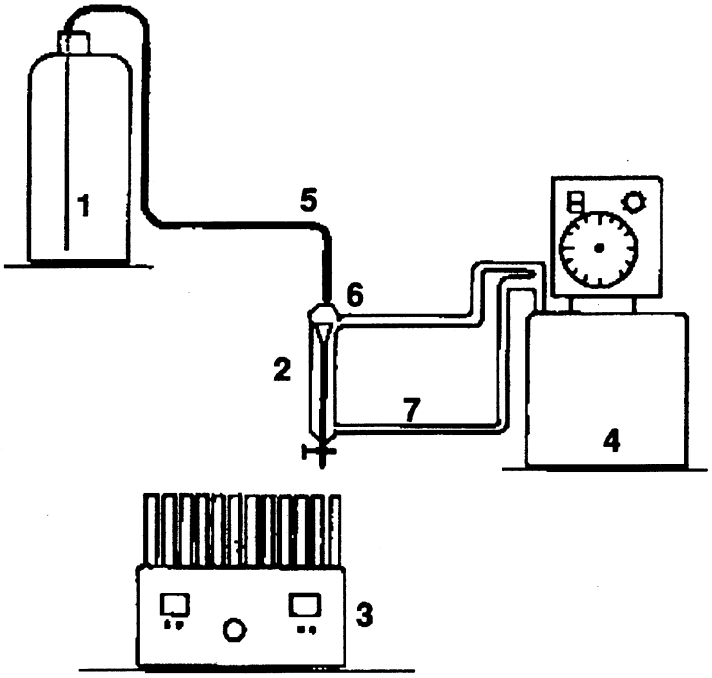


1 = Leveling vessel (e.g. 2.5 L chemical flask)
2 = Column (see figure 3 in paragraph (d)(1)(i)(A)(*2*) of this section)
3 = Fraction accumulator
4 = Thermostat
5 = Teflon tubing
6 = Glass stopper
7 = Water line (between thermostat and column, inner diameter: approximately 8 mm)

(iv) *Analysis.* A substance-specific analytical method is required for these determinations, since small amounts of soluble impurities can cause large errors in the measured solubility. Examples of such methods are gas or liquid chromatography, titration methods, photometric methods, and polarographic methods.

(e) *Data and reporting*—(1) *Column elution method*—(i) *Treatment of results.* The mean value from at least five consecutive samples taken from the saturation plateau (figure 1 in paragraph (c)(4)(i) of this section) should be determined for each run, as should the standard deviation. A comparison should be made between the two means to ensure that they agree with a repeatability of less than 30%.

(ii) *Test report.* The report should contain an indication of the results of the preliminary test plus the following information:

(A) The individual concentrations, flow rates and pHs of each samples.

(B) The means and standard deviations from at least five samples from the saturation plateau of each run.

(C) The average of the two successive, acceptable runs.

(D) The temperature of the runs.

(E) The method of analysis employed.

(F) The nature of the carrier material employed.

(G) Loading of carrier material.

(H) Solvent used.

(I) Statement that the identity of the substance in the saturated solution has been proved.

(2) *Flask method*—(i) *Treatment of results.* The individual results should be given for each of the three flasks and those results deemed to be constant (repeatability <15%) should be averaged and given in units of mass per volume of solution. This may require the conversion of mass units to volume units, using the density when the solubility is very high (100 g/L).

(ii) *Test report.* The report should include the following information:

(A) The individual analytical determinations and the average where more than one value was determined for each flask.

(B) The average of the value for the different flasks which were in agreement.

(C) The test temperature.

(D) The analytical method employed.

(f) *References.* For additional information on this test guideline, the following references should be consulted. These references are available from the TSCA Nonconfidential Information Center, Rm. NE–B607, Environmental Protection Agency, 401 M St., SW., Washington, DC, 12 noon to 4 p.m., Monday through Friday, excluding legal holidays.

(1) Veith, G.D. and V.M. Comstock. Apparatus for continuously saturating water with hydrophobic organic chemicals. *Journal of the Fishing Research Board of Canada* 32:1849–1851 (1975).

(2) *Organization for Economic Cooperation and Development*, Guidelines for The Testing of Chemicals, OECD 105, Water Solubility (Column Elution Method—Shake Flask Method), OECD, Paris, France (1981).

**§ 799.6786 TSCA water solubility: Generator column method.**

(a) *Scope*—(1) *Applicability.* This section is intended to meet the testing requirements of the Toxic Substances Control Act (TSCA) (15 U.S.C. 2601).

(2) *Source.* The source material used in developing this TSCA test guideline is the Office of Pollution Prevention, Pesticides and Toxics (OPPTS) harmonized test guideline 830.7860 (March 1998, revised final guideline). The source is available at the address in paragraph (e) of this section.

(b) *Introduction*—(1) *Purpose.* (i) The water solubility of a chemical is defined as the equilibrium concentration of the chemical in a saturated aqueous solution at a given temperature and pressure. The aqueous phase solubility is an important factor in governing the movement, distribution, and rate of degradation of chemicals in the environment. Substances that are relatively water soluble are more likely to be widely distributed by the hydrologic cycle than those which are

relatively insoluble. Furthermore, substances with higher water solubility are more likely to undergo microbial or chemical degradation in the environment because dissolution makes them ''available'' to interact and, therefore, react with other chemicals and microorganisms. Both the extent and rate of degradation via hydrolysis, photolysis, oxidation, reduction, and biodegradation depend on a chemical being soluble in water (i.e., homogeneous kinetics).

(ii) Water provides the medium in which many organisms live, and water is a major component of the internal environment of all living organisms (except for dormant stages of certain life forms). Even organisms which are adapted to life in a gaseous environment require water for normal functioning. Water is thus the medium through which most other chemicals are transported to and into living cells. As a result, the extent to which chemicals dissolve in water will be a major determinant for movement through the environment and entry into living systems.

(iii) The water solubility of a chemical also has an effect on its sorption into and desorption from soils and sediments, and on volatilization from aqueous media. The more soluble a chemical substance is, the less likely it is to sorb to soils and sediments and the less likely it is to volatilize from water. Finally, the design of most chemical tests and many ecological and health tests requires precise knowledge of the water solubility of the chemical to be tested.

(2) *Definitions.* The following definitions apply to this section.

*Concentration (C)* of a solution is the amount of solute in a given amount of solvent or solution and can be expressed as a weight/weight or weight/volume relationship. The conversion from a weight relationship to one of volume incorporates density as a factor. For dilute aqueous solutions, the density of the solvent is approximately equal to the density of the solution; thus, concentrations expressed in milligrams per liter (mg/L) are approximately equal to $10^{-3}$ g/$10^{3}$ g or parts per million (ppm); those expressed in micrograms per liter (μg/L) are approximately equal to $10^{-6}$ g/$10^{3}$ g or parts per billion (ppb). In addition, concentration can be expressed in terms of molarity, normality, molality, and mole fraction. For example, to convert from weight/volume to molarity molecular mass is incorporated as a factor.

*Density* is the mass of a unit volume of a material. It is a function of temperature, hence the temperature at which it is measured should be specified. For a solid, it is the density of the impermeable portion rather than the bulk density. For solids and liquids, suitable units of measurement are grams per cubic centimeter (g/$cm^3$). The density of a solution is the mass of a unit volume of the solution and suitable units of measurement are g/$cm^3$.

*Extractor column* is used to extract the solute from the saturated solutions produced by the generator column. After extraction onto a chromatographic support, the solute is eluted with a solvent/water mixture and subsequently analyzed by high-pressure liquid chromatography (HPLC), gas chromatography (GC), or any other suitable analytical procedure. A detailed description of the preparation of the extractor column is given in paragraph (c)(1)(i)(D) of this section.

*Generator column* is used to produce or generate saturated solutions of a solute in a solvent. The column, see figure 1 in paragraph (c)(1)(i)(A) of this section, is packed with a solid support coated with the solute, i.e., the organic compound whose solubility is to be determined. When water (the solvent) is pumped through the column, saturated solutions of the solute are generated. Preparation of the generator column is described in paragraph (c)(1)(i)(A) of this section.

*Response factor* (RF) is the solute concentration required to give a 1 unit area chromatographic peak or 1 unit output from the HPLC recording integrator at a particular recorder attenuation. The factor is required to convert from units of area to units of concentration. The determination of the RF is given in paragraph (c)(3)(ii)(B)(*2*) of this section.

*Sample loop* is a 1/16 inch (in) outer diameter (O.D.) (1.6 millimeter (mm)) stainless steel tube with an internal volume between 20 and 50 μL. The loop is attached to the sample injection valve of the HPLC and is used to inject standard solutions into the mobile phase of the HPLC when determining the RF for the recording integrator. The exact volume of the loop must be determined as described in paragraph (c)(3)(ii)(B)(*1*) of this section when the HPLC method is used.

*Saturated solution* is a solution in which the dissolved solute is in equilibrium with an excess of undissolved solute; or a solution in equilibrium such that at a fixed temperature and pressure, the concentration of the solute in the solution is at its maximum value and will not change even in the presence of an excess of solute.

*Solution* is a homogeneous mixture of two or more substances constituting a single phase.

(3) *Principle of the test method.* (i) This test method is based on the dynamic coupled column liquid chromatographic (DCCLC) technique for determining the aqueous solubility of organic compounds that was initially developed by May et al. (as described in the references listed in paragraphs (e)(5) and (e)(6) of this section), modified by DeVoe et al. (as described in the reference listed in paragraph (e)(1) of this section), and finalized by Wasik et al. (as described in the reference listed in paragraph (e)(11) of this section). The DCCLC technique utilizes a generator column, extractor column and HPLC coupled or interconnected to provide a continuous closed flow system. Saturated aqueous solutions of the test compound are produced by pumping water through the generator column that is packed with a solid support coated with the compound. The compound is extracted from the saturated solution onto an extractor column, then eluted from the extractor column with a solvent/water mixture and subsequently analyzed by HPLC using a variable wavelength ultraviolet (UV) detector operating at a suitable wavelength. Chromatogram peaks are recorded and integrated using a recording integrator. The concentration of the compound in the effluent from the generator column, i.e., the water solubility of the compound, is determined from the mass of the compound (solute) extracted from a measured volume of water (solvent).

(ii) Since the HPLC method is only applicable to compounds that absorb in the UV, an alternate GC method, or any other reliable procedure (which must be approved by OPPTS), can be used for those compounds that do not absorb in the UV. In the GC method the saturated solutions produced in the generator column are extracted using an appropriate organic solvent that is subsequently injected into the GC, or any other suitable analytical device, for analysis of the test compound.

(4) *Reference chemicals.* Table 1 of this section lists the water solubilities at 25 °C for a number of reference chemicals as obtained from the scientific literature. The data from Wasik et al. (as described in the reference listed in paragraph (e)(11) of this section), Miller et al. and Tewari et al. (as described in the references listed in paragraphs (e)(7) and (e)(10) of this section, respectively) were obtained from the generator column method. The water solubilities data were also obtained from Mackay et al. and Yalkowski et al. (as described in the

references listed in paragraphs (e)(4) and (e)(12) of this section, respectively) and other scientists by the conventional shake flask method. These data have been provided primarily so that the generator column method can be calibrated from time to time and to allow the chemical testing laboratory an opportunity to compare its results with those listed in table 1 of this section. The water solubility values at 25 °C reported by Yalkowski et al. are their preferred values and, in general, represent the best available water solubility data at 25 °C. The testing laboratory has the option of choosing its own reference chemicals, but references must be given to establish the validity of the measured values of the water solubility.

TABLE 1.—WATER SOLUBILITIES AT 25 °C OF SOME REFERENCE CHEMICALS

| Reference chemical | Water solubility (ppm at 25 °C) | | |
|---|---|---|---|
| | Wasik (generator column method) | Yalkowski[1 5] | Other literature references |
| 2-Heptanone | [2]4080 | 4300 | [5]4330 |
| 1-Chlorobutane | [2]873 | 872.9 | [7]666 |
| Ethylbenzene | [2]187 | 208 | [7]162 |
| 1,2,3-Trimethylbenzene | [2]65.5 | 75.2 | [7]48.2 |
| Biphenyl | [3 10]6.71 | 7.48 | [8]6.62 |
| Phenanthrene | [4]1.002 | 1.212 | — |
| 2,4,6-Trichlorobiphenyl | [3 10]0.226 | 0.225 | [8]0.119 |
| 2,3,4,5-Tetrachlorobiphenyl | [3 10]0.0209 | 0.01396 | [8]0.0192 |
| Hexachlorobenzene | — | 0.004669 | [9]0.00996 |
| 2,3,4,5,6-Pentachlorobiphenyl | [3 10]0.00548 | 0.004016 | [8]0.0068 |

[1] Preferred water solubility at 25 °C by Yalkowski et al. (1990) in paragraph (e)(12) of this section based on a critical review of all the experimental water solubility data published.
[2] Tewari et al. (1982) in paragraph (e)(10) of this section.
[3] Leifer et al. (1983) in paragraph (e)(3) of this section.
[4] May, Wasik, and Freeman (1978, 1978a) in paragraphs (e)(5) and (6) of this section.
[5] Yalkowski et al. (1990) in paragraph (e)(12) of this section.
[6] Hansch et al. (1968) in paragraph (e)(2) of this section.
[7] Sutton and Calder (1975) in paragraph (e)(9) of this section.
[8] Mackay et al. (1980) in paragraph (e)(4) of this section.
[9] The elution chromatographic method from Organization for Economic Cooperation and Development (OECD) (1981) in paragraph (e)(8) of this section.
[10] Miller et al. (1984) in paragraph (e)(7) of this section.

(5) *Applicability and specificity.* (i) Procedures are described in this section to determine the water solubility for liquid or solid compounds. The water solubility can be determined in very pure water, buffer solution for compounds that reversibly ionize or protonate, or in artificial seawater as a function of temperature (i.e., in the range of temperatures of environmental concern). This section is not applicable to the water solubility of gases.

(ii) This section is designed to determine the water solubility of a solid or liquid test chemical in the range of 1 ppb to 5,000 ppm. For chemicals whose solubility is below 1 ppb, the water solubility should be characterized as ''less than 1 ppb'' with no further quantification. For solubilities greater than 5,000 ppm, the shake flask method should be used, see paragraph (e)(15) of this section.

(c) *Test procedure*—(1) *Test conditions*—(i) *Special laboratory equipment*—(A) *Generator column.* (*1*) Either of two different designs shall be used depending on whether the eluted aqueous phase is analyzed by HPLC in paragraph (c)(3)(ii) of this section or by solvent extraction followed by GC (or any other reliable quantitative) analysis of solvent extract in paragraph (c)(3)(iv) of this section. The design of the generator column is shown in the following figure 1:

**Figure 1—Generator Column**

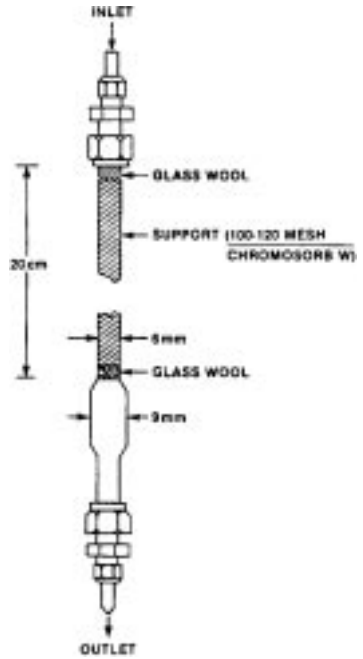


(*2*) The column consists of a 6 mm (¼ in) O.D. pyrex tube joined to a short enlarged section of 9 mm pyrex tubing which in turn is connected to another section of 6 mm (¼ in) O.D. pyrex tubing. Connections to the inlet teflon tubing (⅛ in O.D.) and to the outlet stainless steel tubing (1/16 in O.D.) shall be made by means of stainless steel fittings with teflon ferrules. The column is enclosed in a water jacket for temperature control as shown in the following figure 2:

**Figure 2—Setup Showing Generator Column Enclosed in a Water Jacket and Overall Arrangement of the Apparatus Used in the GC Method**

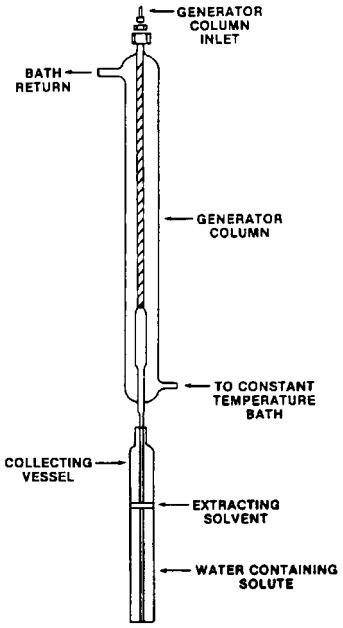


(B) Constant temperature bath with circulation pump-bath and capable of controlling temperature to ± 0.05 °C, see paragraph (c)(3) of this section.

(C) HPLC equipped with a variable wavelenth UV absorption detector operating at a suitable wavelength and a recording integrator in paragraph (c)(3)(ii) of this section.

(D) Extractor column—6.6 × 0.6 cm stainless steel tube with end fittings containing 5 μm frits filled with a superficially porous phase packing (Bondapack $C^{18}$/Corasil: Waters Associates) in paragraph (c)(3)(ii) of this section.

(E) Two 6-port high-pressure rotary switching valves in paragraph (c)(3)(ii) of this section.

(F) Collection vessel—8 × ¾ in section of pyrex tubing with a flat bottom connected to a short section of ⅜ in O.D. borosilicate glass tubing in figure 2 in paragraph (c)(1)(i)(A)(*2*) of this section. The collecting vessel is sealed with a ⅜ in teflon cap fitting in paragraph (c)(3)(iii) of this section.

(G) GC, or any other reliable analytical equipment, which has a detector sensitive to the solute of interest in paragraph (c)(3)(iii) of this section.

(ii) *Purity of water.* Water meeting appropriate American Society for Testing and Materials (ASTM) Type II standards, or an equivalent grade, are recommended to minimize the effects of dissolved salts and other impurities on water solubility. ASTM Type II water is presented in the reference listed in paragraph (e)(13) of this section.

(iii) *Purity of solvents.* All solvents used in this method must be reagent or HPLC grade. Solvents must contain no impurities which could interfere with the determination of the test compound.

(iv) *Seawater.* When the water solubility in seawater is desired, the artificial seawater described in paragraph (c)(2)(ii) of this section must be used.

(v) *Effect of pH on solubility.* For chemicals that reversibly ionize or protonate with a $pK_a$ or $pK_b$ between 3 and 11, experiments must be performed at pH's 5.0, 7.0, and 9.0 using appropriate buffers.

(2) *Preparation of reagents and solutions*—(i) *Buffer solutions.* Prepare buffer solutions as follows:

(A) pH 3.0—to 250 mL of 0.10M potassium hydrogen phosphate add 111 mL of 0.10 M hydrochloric acid; adjust the final volume to 500 mL with reagent grade water.

(B) pH 5.0—to 250 mL of 0.1M potassium hydrogen phthalate add 113 mL of 0.1M sodium hydroxide; adjust the final volume to 500 mL with reagent grade water.

(C) pH 7.0—to 250 mL of 0.1M potassium dihydrogen phosphate add 145 mL of 0.1M sodium hydroxide; adjust the final volume to 500 mL with reagent grade water.

(D) pH 9.0—to 250 mL of 0.075M borax add 69 mL of 0.1M HCl; adjust the final volume to 500 mL with reagent grade water.

(E) pH 11.0—to 250 mL of 0.05 M sodium bicarbonate add 3 mL of 0.10 M sodium hydroxide; adjust the final volume to 500 mL with reagent grade water.

(ii) Check the pH of each buffer solution with a pH meter at 25 °C and adjust to pH 5.0, 7.0, or 9.0, if necessary. If the pH of the solution has changed by ±0.2 pH units or more after the addition of the test compound, then a more concentrated buffer is required for that pH determination. The sponsor should then choose a more suitable buffer.

(iii) *Artificial seawater.* Add the reagent-grade chemicals listed in table 2 of this section in the specified amounts and order to 890 mL of reagent-grade water. Each chemical shall be dissolved before another one is added.

TABLE 2.—CONSTITUENTS OF ARTIFICIAL SEAWATER[1]

| Chemical | Amount |
|---|---|
| NaF | 3 mg |
| $SrCl_2.6H_2O$ | 20 mg |
| $H_3BO_3$ | 30 mg |
| KBr | 100 mg |
| KCl | 700 mg |
| $CaCl_2.2H_2O$ | 1.47 gram (g) |
| $Na_2SO_4$ | 4.00 g |
| $MgCl_2.6H_2O$ | 10.78 g |
| NaCl | 23.50 g |
| $Na_2SiO_3.9H_2O$ | 20 mg |
| $NaHCO_3$ | 200 mg |

[1] If the resulting solution is diluted to 1 L, the salinity should be 34±0.5 g/kilogram (kg) and the pH 8.0±0.2. The desired test salinity is attained by dilution at time of use.

(3) *Performance of the test.* Using either the procedures in paragraph (c)(3)(ii) or (c)(3)(iii) of this section, determine the water solubility of the test compound at 25 °C in reagent-grade water or buffer solution, as appropriate. Under certain circumstances, it may be necessary to determine the water solubility of a test compound at 25 °C in artificial seawater. The water solubility can also be determined at other temperatures of environmental concern by adjusting the temperature of the water bath to the appropriate temperature.

(i) Prior to the determination of the water solubility of the test chemical, two procedures shall be followed.

(A) The saturated aqueous solution leaving the generator column must be tested for the presence of an emulsion, using a Tyndall procedure. If colloids are present, they must be eliminated prior to the injection into the extractor column. This may be achieved by lowering the flow rate of the water.

(B) The efficiency of the removal of the solute (i.e. test chemical) by the solvent extraction from the extraction column must be determined and used in the determination of the water solubility of the test chemical.

(ii) *Procedure A—HPLC method*—(A) *Scope.* (*1*) Procedure A covers the determination of the aqueous solubility of compounds which absorb in the UV.

(*i*) The HPLC analytical system is shown schematically in the following figure 3:

**Figure 3—Schematic of HPLC—Generator Column Flow System**

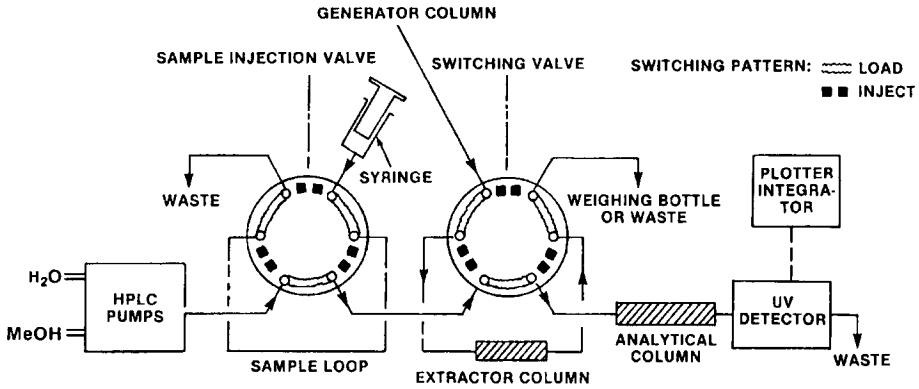


(*ii*) Two reciprocating piston pumps deliver the mobile phase (water or solvent/water mixture) through two 6-port high-pressure rotary valves and a 30 × 0.6 cm $C^{18}$/Corasil analytical column to a variable wavelength UV absorption detector operating at a suitable wavelength; chromatogram peaks are recorded and integrated with a recording integrator. One of the 6-port valves is the sample injection valve used for injecting samples of standard solutions of the solute in an appropriate concentration for determining RFs of standard solutions of basic chromate for determining the sample-loop volume. The other 6-port valve in the system serves as a switching valve for the extractor column which is used to remove solute from the aqueous solutions.

(*2*) The general procedure for analyzing the aqueous phase is as follows (a detailed procedure is given in paragraph (c)(3)(ii)(B)(*4*) of this section).

(*i*) Direct the aqueous solution to ''Waste,'' see figure 3 in paragraph (c)(3)(ii)(A)(*1*)(*i*) of this section, with the switching valve in the inject position in order to equilibrate internal surfaces with the solution, thus ensuring that the analyzed sample would not be depleted by solute adsorption on surfaces upstream from the valve.

(*ii*) At the same time, water is pumped from the HPLC pumps in order to displace the solvent from the extractor column.

(*iii*) The switching valve is next changed to the load position to divert a sample of the solution through the extractor column, and the liquid leaving this column is collected in a weighing bottle. During this extraction step, the mobile phase is changed to a solvent/water mixture to condition the analytical column.

(*iv*) After the desired volume of sample is extracted, the switching valve is returned to the inject position for elution and analysis. Assuming that there is no breakthrough of solute from the extractor column during the extraction step, the chromatographic peak represents all of the solute in the sample, provided that the extraction efficiency is 100%. If the extraction efficiency is less than 100%, then the extraction efficiency shall be used to determine the actual weight of the solute extracted.

(*v*) The solute concentration in the aqueous phase is calculated from the peak area and the weight of the extracted liquid collected in the weighing bottle.

(B) *Determinations*—(*1*) *Sample-loop volume.* Accurate measurement of the sample loop may be accomplished by using the spectrophotometric method of Devoe et al. under paragraph (e)(1) of this section. For this method measure absorbance, $A_{loop}$, at 373 nm of at least three solutions, each of which is prepared by collecting from the sample valve an appropriate number, n, of loopfuls of an aqueous stock solution of $K_2CrO_4$ (1.3% by weight) and diluting to 50 mL with 0.2% KOH. (For a 20 µL loop, use n = 5; for a 50 µL loop, use n = 2.) Also measure the absorbance, $A_{stock}$, of the same stock solution after diluting 1:500 with 0.2% KOH. Calculate the loop volume to the nearest 0.1 µL using the equation:

*Equation 1:*

$$V_{loop} = \left(A_{loop} / A_{stock}\right)\left(10^{-4}/n\right)$$

(*2*) *RF.* (*i*) For all determinations adjust the mobile phase solvent/water ratio and flow rate to obtain a reasonable retention time on the HPLC column. For example, typical concentrations of solvent in the mobile phase range from 50 to 100% while flow rates range from 1 to 3 mL/min; these conditions give a 3 to 5 min retention time.

(*ii*) Prepare standard solutions of known concentrations of the solute in a suitable solvent. Concentrations must give a recorder response within the maximum response of the detector. Inject samples of each standard solution into the HPLC system using the calibrated sample loop. Obtain an average peak area from at least three injections of each standard sample at a set absorbance unit full scale (AUFS), *i.e.,* at the same absorbance scale attenuation setting.

(*iii*) Calculate the RF from the following equation:

*Equation 2:*

$$\text{Response Factor (RF)} = \frac{\text{Concentration mol/L}}{(\text{Average Area})\ (\text{AUFS})}$$

(*3*) *Loading of the generator column.* (*i*) The design of the generator column was described in paragraph (c)(1)(i) of this section and is shown in figure 1 in paragraph (c)(1)(i)(A) of this section. To pack the column, a plug of silanized glass wool is inserted into one end of the 6 mm pyrex tubing. Silanized diatomaceous silica support (about 0.5g 100–120 mesh Chromosorb (W) chromatographic support material) is poured into the tube with tapping and retained with a second plug of silanized glass wool.

(*ii*) If the solute is a liquid, the column is loaded by pulling the liquid solute through the dry support with gentle suction. If the solute is a solid, a 1%

solution of the solid in a volatile solvent is added to the dry packing. The solvent is then distilled off the column under reduced pressure. After loading the column draw water up through the column to remove entrapped air.

(*4*) *Analysis of the solute.* Use the following procedure to collect and analyze the solute.

(*i*) With the switching valve (figure 3 in paragraph (c)(3)(ii)(A)(*1*)(*i*) of this section) in the inject position (i.e., water to waste), pump water through the generator column at a flow rate of approximately 1 mL/min for approximately 5 minutes (min) to bring the system into equilibrium. Pump water to the generator column by means of a minipump or pressurized water reservoir as shown in the following figure 4:

**Figure 4—Water Reservoir for GC Method**

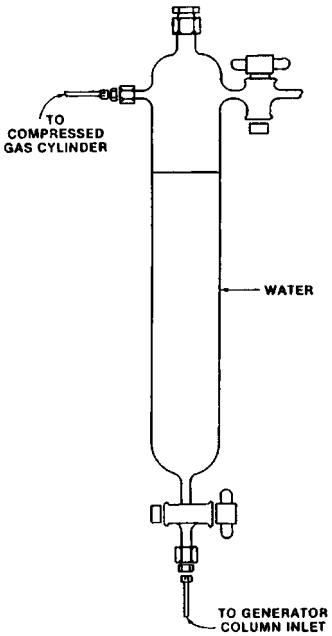


(*ii*) Flush out the solvent that remains in the system from previous runs by changing the mobile phase to 100% $H_2O$ and allowing the water to reach the HPLC detector, as indicated by a negative reading. As soon as this occurs, place a 25 mL weighing bottle (weighed to the nearest mg) at the waste position and immediately turn the switching valve to the load position.

(*iii*) Collect an amount of water (as determined by trial and error) in the weighing bottle, corresponding to the amount of solute adsorbed by the extractor column that gives a large on-scale detector response. During this extraction step, switch back to the original HPLC mobile phase composition, i.e., solvent/water mixture, to condition the HPLC analytical column.

(*iv*) After the desired volume of sample has been extracted, turn the switching valve back to the inject position (figure 3 in paragraph (c)(3)(ii)(A)(*1*)(*i*) of this section); at the same time turn on the recording integrator. The solvent/water mobile phase will elute the solute from the extractor column and transfer the solute to the HPLC analytical column.

(*v*) Remove the weighing bottle, cap it, and replace it with the waste container. Determine the weight of water collected to the nearest mg and record the corresponding peak area. Using the same AUFS setting repeat the analysis of the solute at least two more times and determine the average ratio of peak area to grams of water collected. In this equation, s = solubility (M), RF = response factor, $V_{loop}$ = sample-loop volume (L), and R = ratio of area to grams of water. Calculate the solute solubility in water using the following equation:

*Equation 3:*

$$s = (997\ g/L)(RF)(V_{loop})(AUFS)(R)$$

(iii) *Procedure B—GC method*— (A) *Scope.* In the GC method, or any other analytical method, aqueous solutions from the generator column enter a collecting vessel (figure 2 in paragraph (c)(1)(i)(A)(*2*) of this section) containing a known weight of extracting solvent which is immiscible in water. The outlet of the generator column is positioned such that the aqueous phase always enters below the extracting solvent. After the aqueous phase is collected, the collecting vessel is stoppered and the quantity of aqueous phase is determined by weighing. The solvent and the aqueous phase are equilibrated by slowly rotating the collecting vessel. The extraction efficiency of the solvent must be determined at this time. A small amount of the extracting solvent is removed and injected into a gas chromograph equipped with an appropriate detector. The solute concentration in the aqueous phase is determined from a calibration curve constructed using known concentrations of the solute.

(B) *Alternative method.* If another (approved) analytical method is used instead of the GC, that method shall be used to determine quantitatively the amount of solute present in the extraction solvent.

(C) *Determinations*—(*1*) *Calibration curve.* (*i*) Prepare solute standard solutions of concentrations covering the range of the solute solubility. Select a column and optimum GC operating conditions for resolution between the solute and solvent and the solute and extracting solvent. Inject a known volume of each standard solution into the injection port of the GC. For each standard solution determine the average of the ratio R of peak area to volume (in microliters) for three chromatographic peaks from three injections.

(*ii*) After running all the standard solutions, determine the coefficients, a and b, using a linear regression equation of C vs. R in the following form:

*Equation 4:*

$$C = aR + b$$

(*iii*) If another analytical method is used, the procedures described in paragraph (c)(3)(iii)(C)(*1*) of this section shall be used to determine quantitatively the amount of solute in the extraction solvent.

(*2*) *Loading of the generator column.* The generator column is packed and loaded with solute in the same manner as for the HPLC method described under paragraph (c)(3)(ii)(B)(*3*) of this section. As shown in figure 2 in paragraph (c)(1)(i)(A)(*2*) of this section, attach approximately 20 cm of straight stainless steel tubing to the bottom of the generator column. Connect the top of the generator column to a water reservoir (figure 4 in paragraph (c)(3)(ii)(B)(*4*)(*i*) of this section) using teflon tubing. Use air or nitrogen pressure (5 PSI) from an air or nitrogen cylinder to force water from the reservoir through the column. Collect water in an Erlenmeyer flask for approximately 15 min while the solute concentration in water equilibrates; longer time may be required for less soluble compounds.

(*3*) *Collection and extraction of the solute.* During the equilibration time, add a known weight of extracting solvent to a collection vessel which can be capped. The extracting solvent should cover the bottom of the collection vessel to a depth sufficient to submerge the collecting tube but still maintain 100:1 water/solvent ratio. Record the weight (to the nearest mg) of a collection vessel with cap and extracting solvent. Place the collection vessel under the generator column so that water from the collecting tube enters below the level of the extracting solvent (figure 2 in paragraph (c)(1)(i)(A)(*2*) of this section). When the collection vessel is filled, remove it from under the generator column, replace cap, and weigh the filled vessel. Determine the weight of water collected. Before analyzing for the solute, gently shake the collection vessel contents for

approximately 30 min, controlling the rate of shaking so as not to form an emulsion; rotating the flask end over end five times per minute is sufficient.

(*4*) *Analysis of the solute.* (*i*) After shaking, allow the collection vessel to stand for approximately 30 min; then remove a known volume of the extracting solvent from the vessel using a microliter syringe and inject it into the GC. Record the ratio of peak area to volume injected and, from the regression equation of the calibration line, determine the concentration of solute in the extracting solvent. In this equation, $C_{es}$ is the concentration of solute in extracting solvent (M), $d_{H2O}$ and $d_{es}$ are the densities of water and extracting solvent, respectively, and $g_{es}$ and $g_{H2O}$ are the grams of extracting solvent and water, respectively, contained in the collection vessel. The concentration of solute in water C(M) is determined from the following equation:

*Equation 5:*

$$C(M) = (C_{es})\left[\left(d_{H_2O}/d_{es}\right)\right]\left[\left(g_{es}/g_{H_2O}\right)\right]$$

(*ii*) Make replicate injections from each collecting vessel to determine the average solute concentration in water for each vessel. To make sure the generator column has reached equilibrium, run at least two additional (for a total of three) collection vessels and analyze the extracted solute as described above. Calculate the water solubility of the solute from the average solute concentration in the three vessels.

(iv) *Modification of procedures for potential problems.* If the test compound decomposes in one or more of the aqueous solvents required during the period of the test at a rate such that an accurate value for water solubility cannot be obtained, then it will be necessary to carry out detailed transformation studies; e.g., hydrolysis in paragraph (e)(16) of this section. If decomposition is due to aqueous photolysis, then it will be necessary to carry out water solubility studies in the dark, under red or yellow lights, or by any other suitable method to eliminate this transformation process.

(d) *Data and reporting*—(1) *Test report.* (i) For each set of conditions, (e.g., temperature, pure water, buffer solution, artificial seawater) required for the study, provide the water solubility value for each of three determinations, the mean value, and the standard deviation.

(ii) For compounds that decompose at a rate such that a precise value for the water solubility cannot be obtained, provide a statement to that effect.

(iii) For compounds with water solubility below 1 ppb, report the value as ''less than 1 ppb.''

(2) *Specific analytical, calibration, and recovery procedures.* (i) For the HPLC method describe and/or report:

(A) The method used to determine the sample-loop volume and the average and standard deviation of that volume.

(B) The average and standard deviation of the RF.

(C) Any changes made or problems encountered in the test procedure.

(ii) For the GC, or any other analytical, method report:

(A) The column and GC operating conditions of temperature and flow rate, or the operating conditions of any other analytical method used.

(B) The average and standard deviation of the average area per microliter obtained for each of the standard solutions.

(C) The form of the regression equation obtained in the calibration procedure.

(D) The extracting solvent used, and its extraction efficiency.

(E) The average and standard deviation of solute concentration in each collection vessel.

(F) Any changes made or problems encountered in the test procedure.

(G) If applicable, a complete description of the analytical method which was used instead of the GC method.

(e) *References.* For additional information on this test guideline, the following references should be consulted. These references are available from the TSCA Nonconfidential Information Center, Rm. NE–B607, Environmental Protection Agency, 401 M St., SW., Washington, DC, 12 noon to 4 p.m., Monday through Friday, excluding legal holidays.

(1) DeVoe, H. et al., Generator columns and high pressure liquid chromatography for determining aqueous solubilities and octanol-water partition coefficients of hydrophobic substances. *Journal of Research, National Bureau of Standards,* 86:361–366 (1981).

(2) Hansch, C. et al., The linear free-energy relationship between partition coefficients, and the aqueous solubility of organic liquids. *Journal of Organic Chemistry* 33:347-350 (1968).

(3) Leifer, A. et al., Environmental transport and transformation of polychlorinated biphenyls. Chapter 1. U.S. Environmental Protection Agency Report: EPA-560/5–83–005 (1983).

(4) Mackay, D. et al., Relationships between aqueous solubility and octanol-water partition coefficient. *Chemosphere* 9:701-711 (1980).

(5) May, W.E. et al., Determination of the aqueous solubility of polynuclear aromatic hydrocarbons by a coupled column liquid chromatographic technique. *Analytical Chemistry* 50:175–179 (1978).

(6) May, W.E. et al. Determination of the solubility behavior of some polycyclic aromatic hydrocarbons in the water. *Analytical Chemistry,* 50:997–1000 (1978a).

(7) Miller, N.M. et al., Aqueous solubilities, octanol/water partition coefficients, and entropy of melting of chlorinated benzenes and biphenyls. *Journal of Chemical and Engineering Data* 29:184-190 (1984).

(8) OECD/Organization for Economic Cooperation and Development. Test Guideline No. 105. Water solubility column elution-flask method (1981).

(9) Sutton, C. and Calder, J.A., Solubility of alkylbenzenes in distilled water and seawater at 25 °C. *Journal of Chemical and Engineering Data* 20:320–322 (1975).

(10) Tewari, Y.B. et al., Aqueous solubility and octanol/water partition coefficient of organic compounds at 25 °C. *Journal of Chemical and Engineering Data* 27:451-454 (1982).

(11) Wasik, S.P. et al., Octanol/Water Partition Coefficient and Aqueous Solubilities of Organic Compounds. NBS Report NBSIR 81–2406. Washington, DC: National Bureau of Standards, U.S. Department of Commerce (1981).

(12) Yalkowski, S.H. et al., ''Aquasol database of aqueous solubilities of organic compounds''; Fifth Edition. University of Arizona, College of Pharmacy, Tucson, AZ 85721 (1990) (available at http://www.pharm.arizona.edu/aquasol/index.html).

(13) ASTM D 1193–91, *Standard Specification for Reagent Water.* American Society for Testing and Materials (ASTM). 1916 Race St., Philadelphia, PA 19103.

## Subpart H—[Amended]

3. Sections 799.9110, 799.9120, 799.9130, 799.9305, 799.9310, 799.9325, 799.9355, 799.9365, 799.9410, 799.9430, 799.9537, 799.9630, and 799.9748 are added to subpart H to read as follows:

### § 799.9110 TSCA acute oral toxicity.

(a) *Scope.* This section is intended to meet the testing requirements under section 4 of the Toxic Substances Control Act (TSCA). In the assessment and evaluation of the toxic characteristics of a substance, determination of acute oral toxicity is usually an initial step. It provides

information on health hazards likely to arise from short-term exposure by the oral route. Data from an acute study may serve as a basis for classification and labeling. It is traditionally a step in establishing a dosage regimen in subchronic and other studies and may provide initial information on the mode of toxic action of a substance. An evaluation of acute toxicity data should include the relationship, if any, between the exposure of animals to the test substance and the incidence and severity of all abnormalities, including behavioral and clinical abnormalities, the reversibility of observed abnormalities, gross lesions, body weight changes, effects on mortality, and any other toxic effects.

(b) *Source.* The source material used in developing this TSCA test guideline is the Office of Prevention, Pesticides, and Toxic Substances (OPPTS) harmonized test guideline 870.1100 (August 1998, final guideline). This source is available at the address in paragraph (f) of this section.

(c) *Definitions.* The following definitions apply to this section.

*Acute oral toxicity* is the adverse effects occurring within a short period of time after oral administration of either a single dose of a substance or multiple doses given within a 24–hour period.

*Dosage* is a general term comprising the dose, its frequency, and the duration of dosing.

*Dose* is the amount of test substance administered. Dose is expressed as weight of test substance (milligrams, grams) per unit weight of test animal (e.g., milligrams per kilogram).

*Dose-effect* is the relationship between the dose and the magnitude of a defined biological effect either in an individual or in a population sample.

*Dose-response* is the relationship between the dose and the proportion of a population sample showing a defined effect.

*$LD_{50}$* (median lethal dose) is a statistically derived estimate of single dose of a substance that can be expected to cause death in 50% of animals when administered by the oral route. The $LD_{50}$ value is expressed in terms of weight of test substance per unit weight of test animal (milligrams per kilogram).

(d) *Alternative approaches to the determination of acute toxicity.* (1) EPA will accept the following procedures to reduce the number of animals used to evaluate acute effects of chemical exposure while preserving its ability to make reasoned judgments about safety:

(i) *Estimation of acute oral toxicity.* When further study is warranted, EPA generally supports limiting such tests to those using the lowest number of animals feasible. EPA will accept three alternative Organization for Economic Cooperation and Development (OECD) test methods in place of the ''traditional'' acute oral toxicity test. The three OECD alternatives are the following:

(A) The up and down procedure as described in OECD Guideline 425 referenced in paragraph (f)(4) of this section.

(B) The acute toxic class method as described in OECD Guideline 423 and referenced in paragraph (f)(6) of this section.

(C) The fixed dose method as described in OECD Guideline 420 and referenced in paragraph (f)(5) of this section.

(ii) *Limit test.* When data on structurally related chemicals are inadequate, a limit test may be considered. If rodents are used, a limit dose of at least 2,000 mg per kilogram of body weight may be administered to a single group of five males and five females using the procedures described in paragraph (e) of this section. If no lethality is demonstrated, no further testing for acute oral toxicity is needed. (Under current policy and regulations for pesticide products, precautionary statements may still be required unless there are data to indicate the $LD_{50}$ is greater than 5,000 mg/kg.) If compound-related mortality is produced in the limit test, further study may need to be considered.

(2) [Reserved]

(e) *Conventional acute toxicity test*—(1) *Principle of the test method.* The test substance is administered orally by gavage in graduated doses to several groups of experimental animals, one dose being used per group. The doses chosen may be based on the results of a range finding test. Subsequently, observations of effects and deaths are made. Animals that die during the test are necropsied, and at the conclusion of the test the surviving animals are sacrificed and necropsied. This section is directed primarily to studies in rodent species but may be adapted for studies in nonrodents. Animals showing severe and enduring signs of distress and pain may need to be humanely sacrificed. Dosing test substances in a way known to cause marked pain and distress due to corrosive or irritating properties need not be carried out.

(2) *Substance to be tested.* Test, control, and reference substances are described in 40 CFR Part 792—Good Laboratory Practice Standards.

(3) *Test procedures*—(i) *Preparations.* Healthy young adult animals are acclimatized to the laboratory conditions for at least 5 days prior to the test before the test animals are randomized and assigned to the treatment groups.

(ii) *Animal selection*—(A) *Species and strain.* Although several mammalian test species may be used, the rat is the preferred species. Commonly used laboratory strains must be employed. If another species is used, the tester must provide justification and reasoning for its selection.

(B) *Age.* Young adult rats between 8– and 12–weeks–old at the beginning of dosing should be used. Rabbits should be at least 12 weeks of age at study initiation. The weight variation of animals used in a test must be within 20% of the mean weight for each sex.

(C) *Number and sex of animals.* (*1*) At least five experimentally naive rodents are used at each dose level. They should all be of the same sex. After completion of the study in one sex, at least one group of five animals of the other sex is dosed to establish that animals of this sex are not markedly more sensitive to the test substance. The use of fewer animals may be justified in individual circumstances. Where adequate information is available to demonstrate that animals of the sex tested are markedly more sensitive, testing in animals of the other sex may be dispensed with. An acceptable option would be to test at least one group of five animals per sex at one or more dose levels to definitively determine the more sensitive sex prior to conducting the main study.

(*2*) The females must be nulliparous and nonpregnant.

(*3*) In acute toxicity tests with animals of a higher order than rodents, the use of smaller numbers should be considered.

(D) *Assignment of animals.* Each animal must be assigned a unique identification number. A system to assign animals to test groups and control groups randomly is required.

(E) *Housing.* Animals may be group-caged by sex, but the number of animals per cage must not interfere with clear observation of each animal. The biological properties of the test substance or toxic effects (e.g., morbidity, excitability) may indicate a need for individual caging.

(*1*) The temperature of the experimental animal rooms should be at $22 \pm 3$ °C for rodents.

(*2*) The relative humidity of the experimental animal rooms should be 30 to 70%.

(*3*) Where lighting is artificial, the sequence should be 12–hours light/12–hours dark.

(*4*) For feeding, conventional laboratory diets may be used with an unlimited supply of drinking water.

(iii) *Dose levels and dose selection.* (A) Three dose levels must be used, spaced appropriately to produce test groups with a range of toxic effects and mortality rates. The data collected must be sufficient to produce a dose-response curve and permit an acceptable estimation of the $LD_{50}$. Range finding studies using single animals may help to estimate the positioning of dose groups so that no more than three dose levels will be necessary.

(B) Limit test. This test has been defined and described in paragraph (d)(1)(ii) of this section.

(C) Vehicle. Where necessary, the test substance is dissolved or suspended in a suitable vehicle. If a vehicle or diluent is needed, it should not elicit toxic effects itself nor substantially alter the chemical or toxicological properties of the test substance. It is recommended that wherever possible the use of an aqueous solution be considered first, followed by consideration of a solution in oil (e.g., corn oil), and then by consideration of possible solution in other vehicles. Toxic characteristics of nonaqueous vehicles should be known, and, if not known, should be determined before the test.

(D) Volume. The maximum volume of liquid that can be administered at one time depends on the size of the test animal. In rodents, the volume should not exceed 1 mL/100 g body weight, except when an aqueous solution is used in which case 2 mL/100 g may be administered. Either constant volume or constant concentration administration is acceptable when dosing, provided the following guidance is employed. When possible, the liquid test material should be dosed neat. Otherwise, it may be diluted, using the highest concentration possible, although volumes less than 0.5 mL per animal would not be required. Lower dose volumes are acceptable if they can be accurately administered. Solid materials should be suspended or dissolved in the minimum amount of vehicle and dosed at the highest concentration possible.

(iv) *Exposure and exposure duration.* (A) Animals must be fasted prior to test substance administration. For the rat, feed should be withheld overnight; for other rodents with higher metabolic rates a shorter period of fasting is appropriate.

(B) The test substance must be administered in a single dose by gavage, using a stomach tube or suitable intubation cannula.

(C) If a single dose is not possible, the dose may be given in smaller fractions over a period not exceeding 24 hours. Where a dose is administered in fractions, it may be necessary to provide the animals with food and water, depending on the length of the dosing period.

(D) After the substance has been administered, feed may be withheld for an additional 3–4 hours.

(v) *Observation period.* Although 14 days is recommended as a minimum observation period, the duration of observation should not be fixed rigidly. It should be determined by the toxic reactions, rate of onset, and length of recovery period, and may thus be extended when considered necessary. The time at which signs of toxicity appear, their duration, and the time to death are important, especially if there is a tendency for deaths to be delayed.

(vi) *Observation of animals.* (A) A careful clinical examination must be made at least once each day.

(B) Additional observations must be made daily, especially in the early days of the study. Appropriate actions should be taken to minimize loss of animals to the study (e.g., necropsy or refrigeration of those animals found dead and isolation of weak or moribund animals).

(C) Observations must be detailed and carefully recorded, preferably using explicitly defined scales. Observations should include, but not be limited to, evaluation of skin and fur, eyes and mucous membranes, respiratory and circulatory effects, autonomic effects such as salivation, central nervous system effects, including tremors and convulsions, changes in the level of activity, gait and posture, reactivity to handling or sensory stimuli, altered strength, and stereotypies or bizarre behavior (e.g., self-mutilation, walking backwards).

(D) Individual weights of animals must be determined shortly before the test substance is administered, weekly thereafter, and at death. Changes in weights should be calculated and recorded when survival exceeds 1 day.

(E) The time of death should be recorded as precisely as possible.

(vii) *Gross pathology.* (A) At the end of the test, surviving animals must be weighed and sacrificed.

(B) A gross necropsy must be performed on all animals under test. All gross pathology changes should be recorded.

(C) If necropsy cannot be performed immediately after a dead animal is discovered, the animal should be refrigerated (not frozen) at temperatures low enough to minimize autolysis. Necropsies should be performed as soon as practicable, normally within a day or two.

(viii) *Additional evaluation.* Microscopic examination of organs showing evidence of gross pathology in animals surviving 24 hours or more should also be considered because it may yield useful information.

(ix) *Data and reporting*—(A) *Treatment of results.* Data must be summarized in tabular form, showing for each test group the number of animals at the start of the test, body weights, time of death of individual animals at different dose levels, number of animals displaying other signs of toxicity, description of toxic effects, and necropsy findings. Any methods used for calculation of the $LD_{50}$ or any other parameters should be specified and referenced. Methods for parameter estimation are described in the references listed in paragraphs (f)(1), (f)(2), and (f)(3) of this section.

(B) *Evaluation of results.* An evaluation should include the relationship, if any, between exposure of the animals to the test substance and the incidence and severity of all abnormalities, including behavioral and clinical abnormalities, gross lesions, body weight changes, effects on mortality, and any other toxic effects. The $LD_{50}$ value should always be considered in conjunction with the observed toxic effects and any necropsy findings. The $LD_{50}$ value is a relatively coarse measurement, useful only as a reference value for classification and labeling purposes, and for an expression of the lethal potential of the test substance by the ingestion route. Reference should always be made to the experimental animal species in which the $LD_{50}$ value was obtained.

(C) *Test report.* In addition to the reporting requirements specified under EPA Good Laboratory Practice Standards at 40 CFR part 792, subpart J, the following specific information must be reported. The test report shall include:

(*1*) Species, strain, sex, and source of test animals.

(*2*) Method of randomization in assigning animals to test and control groups.

(*3*) Rationale for selection of species, if other than that recommended.

(*4*) Tabulation of individual and test group data by sex and dose level (e.g., number of animals exposed, number of animals showing signs of toxicity and number of animals that died or were sacrificed during the test).

(*i*) Description of toxic effects, including their time of onset, duration, reversibility, and relationship to dose.

(*ii*) Body weights.

(*iii*) Time of dosing and time of death after dosing.

(*iv*) Dose-response curves for mortality and other toxic effects (when permitted by the method of determination).

(*v*) Gross pathology findings.

(*vi*) Histopathology findings and any additional clinical chemistry evaluations, if performed.

(*5*) Description of any pretest conditioning, including diet, quarantine and treatment for disease.

(*6*) Description of caging conditions including: Number (or change in number) of animals per cage, bedding material, ambient temperature and humidity, photoperiod, and identification of diet of test animals.

(*7*) Manufacturer, source, purity, and lot number of test substance.

(*8*) Relevant properties of substance tested including physical state and pH (if applicable).

(*9*) Identification and composition of any vehicles (e.g., diluents, suspending agents, and emulsifiers) or other materials used in administering the test substance.

(*10*) A list of references cited in the body of the report. References to any published literature used in developing the test protocol, performing the testing, making and interpreting observations, and compiling and evaluating the results.

(f) *References.* For additional background information on this test guideline, the following references should be consulted. These references are available for inspection at the TSCA Nonconfidential Information Center, Rm. NE–B607, Environmental Protection Agency, 401 M St., NW., Washington, DC, 12 noon to 4 p.m., Monday through Friday, except legal holidays.

(1) Chanter, D.O. and Heywood, R. The $LD_{50}$ Test: Some Considerations of Precision. *Toxicology Letters* 10:303–307 (1982).

(2) Finney, D.J. Chapter 3—Estimation of the median effective dose and Chapter 4—Maximum likelihood estimation, *Probit Analysis*, 3rd ed. Cambridge, London (1971).

(3) Finney, D.J. The Median Lethal Dose and Its Estimation. *Archives of Toxicology* 56:215–218 (1985).

(4) Organization for Economic Cooperation and Development. OECD Guidelines for the Testing of Chemicals. OECD Guideline 425: Acute Oral Toxicity: Up-and-Down Procedure, Approved: June 1998.

(5) Organization for Economic Cooperation and Development. OECD Guidelines for Testing of Chemicals. Guideline 420: Acute Oral Toxicity—Fixed Dose Method, Adopted: July 17, 1992.

(6) Organization for Economic Cooperation and Development. OECD Guidelines for Testing of Chemicals. Guideline 423: Acute Oral Toxicity—Acute Toxic Class Method, Adopted: March 22, 1996.

(7) Organization for Economic Cooperation and Development. OECD Guidelines for Testing of Chemicals. Guideline 401: Acute Oral Toxicity, Adopted: February 24, 1987.

### § 799.9120 TSCA acute dermal toxicity.

(a) *Scope.* This section is intended to meet the testing requirements under section 4 of the Toxic Substances Control Act (TSCA). In the assessment and evaluation of the toxic characteristics of a substance, determination of acute dermal toxicity is useful where exposure by the dermal route is likely. It provides information on health hazards likely to arise from short-term exposure by the dermal route. Data from an acute study may serve as a basis for classification and labeling. It is an initial step in establishing a dosage regimen in subchronic and other studies and may provide information on dermal absorption and the mode of toxic action of a substance by this route. An evaluation of acute toxicity data should include the relationship, if any, between the exposure of animals to the test substance and the incidence and severity of all abnormalities, including behavioral and clinical abnormalities, the reversibility of observed abnormalities, gross lesions, body weight changes, effects on mortality, and any other toxic effects.

(b) *Source.* The source material used in developing this TSCA test guideline is the Office of Prevention, Pesticides, and Toxic Substances (OPPTS) harmonized test guideline 870.1200 (August 1998, final guideline). This source is available at the address in paragraph (f) of this section.

(c) *Definitions.* The following definitions apply to this section.

*Acute dermal toxicity* is the adverse effects occurring within a short time of dermal application of a single dose of a substance or multiple doses given within a 24–hour period.

*Dosage* is a general term comprising the dose, its frequency and the duration of dosing.

*Dose* is the amount of test substance applied. Dose is expressed as weight of test substance (grams, milligrams) per unit weight of test animal (e.g., milligrams per kilogram).

*Dose-effect* is the relationship between the dose and the magnitude of a defined biological effect either in an individual or in a population sample.

*Dose-response* is the relationship between the dose and the proportion of a population sample showing a defined effect.

$LD_{50}$ (median lethal dose), dermal, is a statistically derived estimate of a single dose of a substance that can be expected to cause death in 50% of treated animals when applied to the skin. The $LD_{50}$ value is expressed in terms of weight of test substance per unit weight of test animal (milligrams per kilogram).

(d) *Approaches to the determination of acute toxicity.* (1) EPA recommends the following means to reduce the number of animals used to evaluate acute effects of chemical exposure while preserving its ability to make reasonable judgments about safety:

(i) Using data from substantially similar mixtures. In order to minimize the need for animal testing, the Agency encourages the review of existing acute toxicity information on mixtures that are substantially similar to the mixture under investigation. In certain cases it may be possible to glean enough information to make preliminary hazard evaluations that may reduce the need for further animal testing.

(ii) Limit test. When data on structurally related chemicals are inadequate, a limit test may be considered. If rodents are used, a limit dose of at least 2,000 mg/kg bodyweight may be administered to a single group of five males and five females using the procedures described in paragraph (e) of this section. If no lethality is demonstrated, no further testing for acute dermal toxicity is needed. If compound-related mortality is produced, further study may need to be considered.

(2) [Reserved]

(e) *Conventional acute toxicity test*—(1) *Principle of the test method.* The test substance is applied dermally in graduated doses to several groups of experimental animals, one dose being used per group. The doses chosen may be based on the results of a range finding test. Subsequently, observations of effects and deaths are made. Animals that die during the test are necropsied, and at the conclusion of the test the surviving animals are sacrificed and necropsied. This section is directed primarily to studies in either rats, rabbits, or guinea pigs but may be adapted for studies in other species. Animals showing severe and enduring signs of distress and pain may need to be humanely sacrificed. Dosing test substances in a way known to cause marked pain and distress due to corrosive or irritating properties need not be carried out.

(2) *Substance to be tested.* Test, control, and reference substances are discussed in 40 CFR Part 792—Good Laboratory Practice Standards.

(3) *Test procedures*—(i) *Preparations.* Healthy young adult animals are acclimatized to the laboratory conditions for at least 5 days prior to the test before the test animals are randomized and assigned to the treatment groups.

(ii) *Animal selection*—(A) *Species and strain.* The rat, rabbit, or guinea pig may be used. The albino rabbit is preferred because of its size, ease of handling, skin permeability, and extensive data base. Commonly used laboratory strains must be employed. If a species other than rats, rabbits, or guinea pigs is used, the tester must provide justification and reasoning for its selection.

(B) *Age.* Young adult animals, rats between 8– and 12–weeks–old, rabbits at least 12–weeks–old, and guinea pigs between 5– and 6–weeks–old at the beginning of dosing should be used. The weight variation of animals used in a test must be within 20% of the mean weight for each sex.

(C) *Number and sex of animals.* (*1*) At least five experimentally naive animals with healthy intact skin are used at each dose level. They should all be of the same sex. After completion of the study in one sex, at least one group of five animals of the other sex is dosed to establish that animals of this sex are not markedly more sensitive to the test substance. The use of fewer animals may be justified in individual circumstances. Where adequate information is available to demonstrate that animals of the sex tested are markedly more sensitive, testing in animals of the other sex may be dispensed with. An acceptable option would be to test at least one group of five animals per sex at one or more dose levels to definitively determine the more sensitive sex prior to conducting the main study.

(*2*) The females must be nulliparous and nonpregnant.

(*3*) In acute toxicity tests with animals of a higher order than those mentioned above, the use of smaller numbers should be considered.

(D) *Assignment of animals.* Each animal must be assigned a unique identification number. A system to randomly assign animals to test groups and control groups is required.

(E) *Housing.* Animals should be housed in individual cages.

(*1*) The temperature of the experimental animal rooms should be at 22 ± 3 °C for rodents, 20 ± 3 °C for rabbits.

(*2*) The relative humidity of the experimental animal rooms should be 30 to 70%.

(*3*) Where lighting is artificial, the sequence should be 12–hours light/12–hours dark.

(*4*) For feeding, conventional laboratory diets may be used with an unlimited supply of drinking water.

(iii) *Dose levels and dose selection.* (A) Three dose levels must be used and spaced appropriately to produce test groups with a range of toxic effects and mortality rates. The data must be sufficient to produce a dose-response curve and permit an acceptable estimation of the median lethal dose. Range finding studies using single animals may help to estimate the positioning of the dose groups so that no more than three dose levels will be necessary.

(B) Limit test. This test is described in paragraph (d)(2)(ii) of this section.

(C) Vehicle. Solids should be pulverized when possible. The test substance should be moistened sufficiently with water or, where necessary, a suitable vehicle to ensure good contact with skin. If a vehicle or diluent is needed, it should not elicit toxic effects itself nor substantially alter the chemical or toxicological properties of the test substance. In addition, the influence of the vehicle on penetration of skin by the test substance should be taken into account. It is recommended that wherever possible the use of an aqueous solution be considered first, followed by consideration of a solution in oil (e.g., corn oil), and then by consideration of possible solution in other vehicles. For nonaqueous vehicles the toxic characteristics of the vehicle should be known, and if not known should be determined before the test. Acceptable alternative vehicles include gum arabic, ethanol and water, carboxymethyl cellulose, glycerol, propylene glycol, PEG vegetable oil, and mineral oil as long as the vehicle is not irritating and the inability to use water or saline is justified in the report.

(iv) *Exposure and exposure duration.* The test substance must be administered over a period of 24 hours.

(v) *Preparation of animal skin.* Fur must be clipped from the dorsal area of the trunk of the test animals. Shaving may be employed, but it should be carried out at least 24 hours before dosing. Care must be taken to avoid abrading the skin, which would alter its permeability.

(vi) *Application of test substance.* (A) The test substance must be applied uniformly over a shaved or clipped area which is approximately 10% of the body surface area. The area starting at the scapulae (shoulders) to the wing of the ileum (hip bone) and half way down the flank on each side of the animal should be shaved or clipped. Liquid test materials should be undiluted if possible. With highly toxic substances, the surface area covered may be less, but as much of the area as possible should be covered with as thin and uniform a film as practical. The test material is not removed until 24 hours after application. In the case where less than 10% of the surface area is covered an approximation of the exposed areas should be determined.

(B) The test substance must be held in contact with the skin with a porous gauze dressing (<8 ply) and nonirritating tape throughout a 24–hour exposure period. The test site must be further covered in a suitable manner to retain the gauze dressing and test substance and ensure that the animals cannot ingest the test substance. Restrainers may be used to prevent the ingestion of the test substance, but complete immobilization is not a recommended method. Although a semiocclusive dressing is preferred, an occlusive dressing will also be acceptable.

(C) At the end of the exposure period, residual test substance should be removed where practicable using water or an appropriate solvent.

(vii) *Observation period.* Although 14 days is recommended as a minimum observation period, the duration of observation should not be fixed rigidly. It should be determined by the toxic reactions, rate of onset, and length of recovery period, and may thus be extended when considered necessary. The time at which signs of toxicity appear, their duration, and the time to death are important, especially if there is a tendency for deaths to be delayed.

(viii) *Observation of animals.* (A) A careful clinical examination must be made at least once each day.

(B) Additional observations must be made daily, especially in the early days of the study. Appropriate actions should be taken to minimize loss of animals to the study (e.g., necropsy or refrigeration of those animals found dead and isolation of weak or moribund animals).

(C) Observations must be detailed and carefully recorded, preferably using explicitly defined scales. Observations should include, but not be limited to, evaluation of skin and fur, eyes and mucous membranes, respiratory and circulatory effects, autonomic effects such as salivation, central nervous system effects, including tremors and convulsions, changes in the level of activity, gait and posture, reactivity to handling or sensory stimuli, altered

strength, and stereotypies or bizarre behavior (*e.g.,* self-mutilation, walking backwards).

(D) Individual weights of animals must be determined shortly before the test substance is administered, weekly thereafter, and at death. Changes in weights should be calculated and recorded when survival exceeds one day.

(E) The time of death should be recorded as precisely as possible.

(ix) *Gross pathology.* (A) At the end of the test, surviving animals must be weighed and sacrificed.

(B) A gross necropsy must be performed on all animals under test. All gross pathology changes should be recorded.

(C) If necropsy cannot be performed immediately after a dead animal is discovered, the animal should be refrigerated (not frozen) at temperatures low enough to minimize autolysis. Necropsies should be performed as soon as practicable, normally within a day or two.

(x) *Additional evaluations.* Microscopic examination of organs showing evidence of gross pathology in animals surviving 24 hours or more should also be considered because it may yield useful information.

(xi) *Data and reporting*—(A) *Treatment of results.* Data must be summarized in tabular form, showing for each test group the number of animals at the start of the test, body weights, time of death of individual animals at different dose levels, number of animals displaying other signs of toxicity, description of toxic effects and necropsy findings. Any methods used for calculation of the $LD_{50}$ or any other parameters should be specified and referenced. Methods for parameter estimation are described in the references listed in paragraphs (f)(1), (f)(2), and (f)(3) of this section.

(B) *Evaluation of results.* An evaluation should include the relationship, if any, between exposure of the animals to the test substance and the incidence and severity of all abnormalities, including behavioral and clinical abnormalities, gross lesions, body weight changes, effects on mortality, and any other toxic effects. The $LD_{50}$ value should always be considered in conjunction with the observed toxic effects and any necropsy findings. The $LD_{50}$ value is a relatively coarse measurement, useful only as a reference value for classification and labeling purposes, and for an expression of the lethal potential of the test substance by the dermal route. Reference should always be made to the experimental animal species in which the $LD_{50}$ value was obtained.

(C) *Test report.* In addition to the reporting requirements specified under EPA Good Laboratory Practice Standards at 40 CFR part 792, subpart J, the following specific information must be reported. The test report must include:

(*1*) Species, strain, sex, and source of test animals.

(*2*) Method of randomization in assigning animals to test and control groups.

(*3*) Rationale for selection of species, if other than that recommended.

(*4*) Tabulation of individual and test group data by sex and dose level (*e.g.,* number of animals exposed, number of animals showing signs of toxicity and number of animals that died or were sacrificed during the test).

(*i*) Description of toxic effects, including their time of onset, duration, reversibility, and relationship to dose.

(*ii*) Body weights.

(*iii*) Time of dosing and time of death after dosing.

(*iv*) Dose-response curves for mortality and other toxic effects (when permitted by the method of determination).

(*v*) Gross pathology findings.

(*vi*) Histopathology findings and any additional clinical chemistry evaluations, if performed.

(*5*) Description of any pre-test conditioning, including diet, quarantine and treatment for disease.

(*6*) Description of caging conditions including: Number (or change in number) of animals per cage, bedding material, ambient temperature and humidity, photoperiod, and identification of diet of test animals.

(*7*) Manufacturer, source, purity, and lot number of test substance.

(*8*) Relevant properties of substance tested including physical state and pH (if applicable).

(*9*) Identification and composition of any vehicles (e.g., diluents, suspending agents, and emulsifiers) or other materials used in administering the test substance.

(*10*) A list of references cited in the body of the report. References to any published literature used in developing the test protocol, performing the testing, making and interpreting observations, and compiling and evaluating the results.

(f) *References.* For additional background information on this test guideline, the following references should be consulted. These references are available for inspection at the TSCA Nonconfidential Information Center, Rm. NE–B607, Environmental Protection Agency, 401 M St., NW., Washington, DC, 12 noon to 4 p.m., Monday through Friday, except legal holidays.

(1) Chanter, D.O. and Heywood, R., The $LD_{50}$ Test: Some Considerations of Precision, *Toxicology Letters* 10:303–307 (1982).

(2) Finney, D.J. Chapter 3—Estimation of the median effective dose and Chapter 4-Maximum likelihood estimation, *Probit Analysis*, 3rd ed. Cambridge, London (1971).

(3) Finney, D.J. The Median Lethal Dose and Its Estimation. *Archives of Toxicology* 56:215–218 (1985).

(4) Organization for Economic Cooperation and Development. OECD Guideline for the Testing of Chemicals. OECD Guideline 425: Acute Oral Toxicity: Up-and-Down Procedure. Adopted: September 21, 1998.

(5) Organization for Economic Cooperation and Development. OECD Guidelines for Testing of Chemicals. Guideline 420: Acute Oral Toxicity—Fixed Dose Method. Adopted: July 17, 1992.

(6) Organization for Economic Cooperation and Development. OECD Guidelines for Testing of Chemicals. Guideline 423: Acute Oral Toxicity—Acute Toxic Class Method. Adopted: March 22, 1996

(7) Organization for Economic Cooperation and Development. OECD Guidelines for Testing of Chemicals. Guideline 402: Acute Dermal Toxicity. Adopted: February 24, 1987.

**§ 799.9130 TSCA acute inhalation toxicity.**

(a) *Scope.* This section is intended to meet testing requirements under section 4 of the Toxic Substances Control Act (TSCA). Determination of acute toxicity is usually an initial step in the assessment and evaluation of the toxic characteristics of a substance that may be inhaled such as a gas, volatile substance, or aerosol/particle. It provides information on health hazards likely to arise from short-term exposure by the inhalation route. Data from an acute study may serve as a basis for classification and labeling. It is traditionally a step in establishing a dosage regimen in subchronic and other studies and may provide initial information on the mode of toxic action of a substance. An evaluation of acute toxicity data should include the relationship, if any, between the animals' exposure to the test substance and the incidence and severity of all abnormalities, including behavioral and clinical abnormalities, the reversibility of observed abnormalities, gross lesions, body weight changes, effects on mortality, and any other toxic effects.

(b) *Source*. The source material used in developing this TSCA test guideline is the harmonized Office of Prevention, Pesticides, and Toxic Substances (OPPTS) test guideline 870.1300 (August 1998, final guideline). These sources are available at the address in paragraph (g) of this section.

(c) *Definitions*. The definitions in section 3 of TSCA and the definitions in 40 CFR Part 792—Good Laboratory Practice Standards apply to this section. The following definitions also apply to this section.

*Acute inhalation toxicity* is the adverse effect caused by a substance following a single uninterrupted exposure by inhalation over a short period of time (24 hours or less) to a substance capable of being inhaled.

*Aerodynamic equivalent diameter* is defined as the diameter of a unit-density sphere having the same terminal settling velocity as the particle in question, whatever its size, shape, and density. It is used to predict where in the respiratory tract such particles may be deposited.

*Concentration* is expressed as weight of the test substance per unit volume of air, e.g., milligrams per liter.

*Geometric standard deviation* (GSD) is a dimensionless number equal to the ratio between the mass median aerodynamic diameter (MMAD) and either 84% or 16% of the diameter size distribution (*e.g.,* MMAD = 2 m; 84% = 4 m; GSD = 4/2 = 2.0.) The MMAD, together with the GSD, describe the particle size distribution of an aerosol. Use of the GSD may not be valid for non-lognormally distributed aerosols. (If the size distribution deviates from the lognormal, it shall be noted).

*Inhalable diameter* refers to that aerodynamic diameter of a particle which is considered to be inhalable for the organism under study. It is used to refer to particles which are capable of being inhaled and deposited anywhere within the respiratory tract .

$LC_{50}$ (median lethal concentration) is a statistically derived estimate of a concentration of a substance that can be expected to cause death during exposure or within a fixed time after exposure in 50% of animals exposed for a specified time. The $LC_{50}$ value is a relatively coarse measurement useful only for classification and labeling purposes and an expression of the lethal potential of the test substance following inhalation. The $LC_{50}$ value is expressed as weight of test substance per unit volume of air (milligrams per liter) or parts per million. For clarity, the exposure duration and test animal species should also be specified, *e.g.,* 4 hours $LC_{50}$ in F344.

*Mass median aerodynamic diameter (MMAD)* is the median aero-dynamic diameter and, along with the geometric standard deviation, is used to describe the particle size distribution of any aerosol statistically, based on the weight and size of the particles. Fifty percent of the particles by weight will be smaller than the median diameter and 50% of the particles will be larger.

(d) *Approaches to the determination of acute toxicity*. (1) EPA recommends the following means to reduce the number of animals used to evaluate acute effects of chemical exposure while preserving its ability to make reasonable judgments about safety:

(i) Using data from substantially similar mixtures. In order to minimize the need for animal testing, the Agency encourages the review of existing acute toxicity information on mixtures that are substantially similar to mixtures under investigation. In certain cases, it may be possible to get enough information to make preliminary hazard evaluations that may reduce the need for further animal testing.

(ii) Limit test. When data on structurally related chemicals are inadequate, a limit test may be considered. In the limit test, a single group of five males and five females is exposed to 2 mg/L for 4 hours, or where this is not possible due to physical or chemical properties of the test substance, the maximum attainable concentration where a particle size distribution having an MMAD between 1 and 4 μm cannot be maintained, using the procedures described under paragraph (e) of this section. For fibers, the bivariate distribution of length and diameter must ensure inhalability. For gases and vapors, the concentrations need not be greater than 50,000 ppm or 50% of the lower explosive limit, whichever is lower. If a test at an aerosol or particulate exposure of 2 mg/L (actual concentration of respirable substance) for 4 hours or, where this is not feasible, the maximum attainable concentration, using the procedures described for this study, produces no observable toxic effects, then a full study using three concentrations will not be necessary. Similarly, if a test at a gas or vapor exposure of 50,000 ppm or 50% of the lower explosive limit, whichever is lower, produces no observable toxic effects, then a full study using three concentrations will not be necessary.

(2) [Reserved]

(e) *Conventional acute toxicity test*—(1) *Principle of the test method*. Several groups of experimental animals are exposed to the test substance in graduated concentrations for a defined period, one concentration being used per group. When a vehicle other than water is used to help generate an appropriate concentration of the substance in the atmosphere, a vehicle control group should be used when historical data are not available or adequate to determine the acute inhalation toxicity of the vehicle. Subsequently, observations of effects and death are made. Animals that die during the test are necropsied and at the conclusion of the test surviving animals are sacrificed and necropsied. This guideline is directed primarily to studies in rodent species but may be adapted for studies in non-rodents. Animals showing severe and enduring signs of distress and pain may need to be sacrificed. Dosing test substances in a way known to cause marked pain and distress due to corrosive or irritating properties need not be carried out.

(2) *Substance to be tested*. Test, control, and reference substances are discussed under EPA Good Laboratory Practice Standards at 40 CFR part 792, subpart f.

(3) *Test procedures*—(i) *Preparation*. Healthy young adult animals are acclimatized to the laboratory conditions for at least 5 days prior to the test. Before the test, animals are randomized and assigned to the required number of groups.

(ii) *Animal selection*—(A) *Species and strain*. (*1*) Although several mammalian test species may be used, the preferred species is the rat. Commonly used laboratory strains should be employed. If another mammalian species is used, the investigator should provide justification and reasoning for the selection.

(*2*) Health Status. Body weight and feed consumption are not sufficient indicators of the health status of animals prior to initiating an inhalation toxicity study. Prior to initiating the study, animals must be monitored for known viral and bacterial respiratory pathogens determined by conventional microbiological assays (e.g., serology). The animals must be free from pathogens at the start of exposure.

(B) *Age*. Young adult rats between 8–12 weeks old at the beginning of dosing, should be used. The weight variation in animals or between groups used in a test should not exceed ± 20% of the mean weight of each sex.

(C) *Number of animals and sex*. (*1*) At least five experimentally naive animals are used at each concentration and they must be of one sex. After completion of the study in one sex, at least one group of five animals of the other sex is exposed to establish that animals of this sex are not markedly more sensitive to

the test substance. The use of fewer animals may be justified in individual circumstances. Where adequate information is available to demonstrate that animals of the sex tested are markedly more sensitive, testing in animals of the other sex is not required. An acceptable option would be to test at least one group of five animals per sex at one or more dose levels to definitively determine the more sensitive sex prior to conducting the main study.

(*2*) Females must be nulliparous and nonpregnant.

(*3*) In acute toxicity tests with animals of a higher order than rodents, the use of fewer animals per concentration group should be considered.

(D) *Assignment of animals.* (*1*) Each animal must be assigned a unique identification number. A system to assign animals to test groups and control groups randomly is required.

(*2*) Control groups. A concurrent untreated control group is not necessary. Where a vehicle other than water is used to generate an appropriate concentration of the test substance in the atmosphere and historical data are not available or adequate to determine the acute toxicity of the vehicle, a vehicle control group must be used. The vehicle control group must be a sham-treated group. Except for treatment with the test substance, animals in the vehicle control group must be handled in a manner identical to the test-group animals.

(E) *Housing.* The animals may be group-caged by sex, but the number of animals per cage must not interfere with clear observation of each animal. The biological properties of the test substance or toxic effects (e.g., morbidity, excitability) may indicate a need for individual caging. Animals must be housed individually in inhalation chambers during exposure to aerosols.

(*1*) Before and after exposure, the temperature of the animal room should be 22 ± 3 °C and the relative humidity 30–70%.

(*2*) Where lighting is artificial, the sequence should be 12 hours light/12 hours dark.

(*3*) For feeding, conventional laboratory diets may be used with an unlimited supply of drinking water.

(F) *Inhalation equipment.* (*1*) Animals can be exposed to the substance by either a nose-only procedure or in a whole-body exposure chamber. Maintenance of slight negative pressure inside the chamber will prevent leakage of the test substance into the surrounding areas. The nose-only exposure procedure is recommended for studies of aerosols to minimize exposures confounding resultant from test substance ingestion due to test animal fur licking following exposures. Animals must be acclimated to the nose-only exposure chamber prior to study and heat stress minimized during testing.

(*2*) Inhalation chambers. The animals must be tested in inhalation equipment designed to sustain a dynamic airflow for nose-only exposures of at least 300 ml/minute/animal or an airflow for whole-body exposures of at least 12 to 15 air changes per hour and ensure an adequate oxygen content of at least 19% and an evenly distributed exposure atmosphere. Where a whole-body chamber is used, its design must minimize crowding by providing individual caging. As a general rule, to ensure stability of a chamber atmosphere, the total ''volume'' of the test animals should not exceed 5% of the volume of the test chamber.

(*3*) Environmental conditions. The temperature at which the test is performed must be maintained at 22 °C (± 2 °C). Ideally, the relative humidity should be maintained between 40% and 60%, but in certain instances (e.g., tests using water as a vehicle), this may not be practical.

(G) *Physical measurements.* Measurements or monitoring must be made of the following:

(*1*) Chemical purity of the test material must be analyzed. If the test substance is present in a mixture, the mass and composition of the entire mixture, as well as the principal compound, must be measured. If there is some difficulty in measuring chamber analytical concentration due to precipitation, nonhomogeneous mixtures, volatile components, or other factors, additional analyses of components may be necessary.

(*2*) The rate of air flow should be monitored continuously, and must be recorded at least every 30 minutes during the exposure period.

(*3*) The actual concentrations of the test substance must be measured in the breathing zone. During the exposure period, the actual concentrations of the test substance must be held as constant as practicable, monitored continuously or intermittently depending on the method of analysis, and recorded at least three times (*i.e.,* at the beginning, at an intermediate time, and at the end) during the exposure period. Chamber concentration may be measured using gravimetric or analytical methods as appropriate. If trial run measurements are reasonably consistent (± 10% for liquid aerosol, gas, or vapor; ± 20% for dry aerosol), then a minimum of two measurements are sufficient. If measurements are not consistent, then a minimum of four measurements should be taken.

(*4*) During the development of the generating system, particle size analysis must be performed to establish the stability of aerosol concentrations. During exposure, analysis should be conducted as often as necessary to determine the consistency of particle size distribution. The MMAD particle size range should be between 1–4 μm. The particle size of hygroscopic materials must be small enough when dry to assure that the size of the swollen particle will still be within the 1–4 μm MMAD range. Characterization for fibers must include the bivariate distribution of length and diameter; this distribution must ensure inhalability. Measurements of aerodynamic particle size in the animal's breathing zone must be measured during a trial run. If MMAD values for each exposure level are within 10% of each other, then a minimum of two measurements during the exposures should be sufficient. If pretest measurements are not within 10% of each other, then a minimum of four measurements should be taken.

(*5*) Temperature and humidity must be monitored continuously, and must be recorded at least every 30 minutes.

(iii) *Exposure duration and concentration levels.* (A) Exposure duration. Shortly before exposure, the animals are weighed and then exposed to the test target concentration in the designated apparatus for 4 hour exposure period after equilibration of the chamber concentrations. The target concentration is defined by an average of 5% for gases and vapors and 15% for particles and aerosols. The animals are weighed again at the conclusion of the exposure period to determine body weight change. Other durations may be needed to meet specific requirements. Food must be withheld during exposure. Water may also be withheld in certain circumstances.

(B) Exposure concentration levels. At least three concentration levels and a vehicle control group, if required (see paragraph (e)(3)(ii)(D)(*2*) of this section), must be used. The concentration levels should be spaced appropriately to produce a concentration-response curve and permit an estimation of the median lethal concentration ($LC_{50}$). The concentrations can either be linearly or logarithmically spaced depending on the anticipated steepness of the concentration-response curve. A rationale for concentration selection should be provided to indicate that the selected concentrations will maximally support detection of concentration-

response relationship. The high concentration should be clearly toxic or a limit concentration, but should not result in an incidence of fatalities that would preclude a meaningful evaluation of the data. The lowest concentration should define a no-observed-effects level (NOEL). Range-finding studies using single animals may help to estimate the positioning of the test groups so that no more than three concentration levels will be necessary.

(C) When the physical and chemical properties of the test substance show a low flash point or the test substance is otherwise known or thought to be explosive, care must be taken to avoid exposure level concentrations that could result in an exposure chamber explosion during the test.

(iv) *Observation period.* The observation period must be at least 14 days. However, the duration of observation should not be fixed rigidly. It should be determined by the toxic reactions, rate of onset, and length of recovery period, and thus may be extended when considered necessary. The time at which signs of toxicity appear, the duration of the signs observed, and the time of death must be recorded and are important, especially if there is a tendency for delayed effects.

(v) *Observation of animals.* (A) A careful clinical examination must be made at least once each day.

(B) Additional observations should be made daily with appropriate actions taken to minimize loss of animals to the study, e.g., necropsy or refrigeration of those animals found dead and isolation of weak or moribund animals.

(C) Observations must be detailed and carefully recorded, preferably using explicitly defined scales. Observations should include, but not be limited to, evaluation of skin and fur, eyes and mucous membranes, respiratory and circulatory effects, autonomic effects such as salivation, central nervous system effects, including tremors and convulsions, changes in the level of activity, gait and posture, reactivity to handling or sensory stimuli, altered strength, and stereotypies or bizarre behavior (e.g., self mutilation, walking backwards).

(D) Individual weights of animals must be determined pre-exposure and post-exposure, weekly after exposure, and at death. Changes in weights should be calculated and recorded when survival exceeds 1 day.

(E) The time of death should be recorded as precisely as possible.

(vi) *Gross pathology.* (A) At the end of the test, surviving animals must be weighed, sacrificed and a gross necropsy must be performed on all animals under test, with particular reference to any changes in the respiratory tract. All gross pathology changes must be recorded.

(*1*) The gross necropsy must include examination of orifices and the cranial, thoracic, and abdominal cavities, and contents.

(*2*) At least the lungs, liver, kidneys, adrenals, brain, and gonads should be weighed wet, as soon as possible after dissection to avoid drying.

(*3*) Optionally, the following organs and tissues, or representative samples thereof, may be preserved in a suitable medium for possible future histopathological examination: All gross lesions; brain-including sections of medulla/pons; cerebellar cortex and cerebral cortex; pituitary; thyroid/parathyroid; thymus; heart; sternum with bone marrow; salivary glands; liver; spleen; kidneys; adrenals; pancreas; gonads; accessory genital organs (epididymis, prostrate, and, if present, seminal vesicles); aorta; skin; gall bladder (if present); esophagus; stomach; duodenum; jejunum; ileum; cecum; colon; rectum; urinary bladder; representative lymph nodes; thigh musculature; peripheral nerve; spinal cord at three levels cervical, midthoracic, and lumbar; and eyes. Respiratory tract tissues should be perfusion preserved in a suitable medium.

(B) If necropsy cannot be performed immediately after a dead animal is discovered during the observation period, the animal should be refrigerated (not frozen) at temperatures low enough to minimize autolysis. Necropsies should be performed as soon as possible after death (normally within 24 to 48 hours).

(vii) *Additional evaluations.* In animals surviving 24 hours or more, microscopic examination of organs showing evidence of gross pathology should be considered since it may yield useful information on the nature of acute toxic effects.

(f) *Data and reporting*—(1) *Treatment of results.* Data must be summarized in tabular form showing for each test group the number of animals at the start of the test, body weights, time of death of individual animals at different exposure levels, number of animals displaying other signs of toxicity, description of toxic effects and necropsy findings. The method used for calculation of the $LC_{50}$ or any other parameters must be specified and referenced. Some acceptable methods for parameter estimation are described in the references described in paragraphs (g)(1), (g)(2), and (g)(3) of this section.

(2) *Evaluation of results.* The $LC_{50}$ value should be considered in conjunction with the observed toxic effects and the necropsy findings. The evaluation should include the relationship, if any, between exposure of animals to the test substance and the incidence and severity of all abnormalities including behavioral and clinical abnormalities, gross lesions, body weight changes, mortality, and other toxic effects.

(3) *Test report.* In addition to the reporting requirements specified under EPA Good Laboratory Practice Standards at 40 CFR part 792, subpart J, the following specific information must be reported. The test report shall include:

(i) Test conditions. (A) Description of exposure apparatus including design, type, dimensions.

(B) Source of air, system for generating the test article as particle, aerosol, gas, or vapor.

(C) Method for conditioning air, equipment for measuring temperature, humidity, particle size or particulate aerosol concentration size, and actual concentration.

(D) Treatment of exhaust air and the method of housing the animals in a test chamber when this is used.

(ii) Exposure data. The exposure data must be tabulated and presented with mean values and a measure of variability (e.g., standard deviation) and should include:

(A) Chemical purity of the test material.

(B) Airflow rates through the inhalation equipment.

(C) Temperature and humidity of the air.

(D) Nominal concentration (total amount of test substance fed into the inhalation equipment divided by volume of air).

(E) Actual (analytical or gravimetric) concentration in test breathing zone.

(F) Particle size distribution (calculated MMAD and GSD) and the bivariate distribution of fiber length and diameter, where appropriate.

(G) Explanation as to why the desired chamber concentration and/or particle size could not be achieved (if applicable), and the efforts taken to comply with these aspects of this section.

(iii) Species, strain, sex, and source of test animals.

(iv) Method of randomization in assigning animals to test and control groups.

(v) Rationale for selection of species, if other than that recommended.

(vi) Results. Tabulation of individual and test group data by sex and exposure

concentration level (e.g., number of animals exposed, number of animals showing signs of toxicity and number of animals that died or were sacrificed during the test).

(A) Description of toxic effects including time of onset, duration, reversibility, and relationship to the exposure concentration levels.

(B) Pre-exposure and post-exposure body weight change in animals, and weight change during the observation period.

(C) Time of dosing and time of death during or following exposure.

(D) Concentration-response curves for mortality and other toxic effects (when permitted by the method of determination).

(E) Gross pathology necropsy findings in the test animals and vehicle control animals, if included. Data must be tabulated to show the counts and incidence of gross alterations observed for each group tested and the number of animals affected by each type of lesion along with the location and frequency of each type of lesion.

(F) Histopathology findings and any additional evaluations (e.g., clinical chemistry), if performed.

(vii) Description of any pretest conditioning, including diet, quarantine and treatment for disease.

(viii) Description of caging conditions, including: number (or change in number) of animals per cage, bedding material, ambient temperature and humidity, photoperiod, and identification of diet of test animals.

(ix) Manufacturer (source), lot number, and purity of test substance.

(x) Identification and composition of any vehicles (e.g., diluents, suspending agents, and emulsifiers) or other materials , if used in administering the test substance.

(xi) A list of references cited in the body of the report. References to any published literature used in developing the test protocol, performing the testing, making and interpreting observations, and compiling and evaluating the results.

(g) *References*. For additional background information on this test guideline, the following references should be consulted. These references are available for inspection at the TSCA Nonconfidential Information Center, Rm. NE–B607, Environmental Protection Agency, 401 M St., NW., Washington, DC, 12 noon to 4 p.m., Monday through Friday, except legal holidays.

(1) Chanter, D.O. and Heywood, R. The $L_{D50}$ test: some considerations of precision. *Toxicology Letters* 10:303 307 (1982).

(2) Finney, D.G. Chapter 3 Estimation of the median effective dose, Chapter 4 Maximum likelihood estimation. *Probit Analysis.* 3rd Ed. (Cambridge, London. (1971).

(3) Finney, D.J. The Median Lethal Dose and Its Estimation, *Archives of Toxicology* 56:215 218 (1985).

(4) Organization for Economic Cooperation and Development. OECD Guidelines for the Testing of Chemicals. Final Draft OECD Guideline 425: Acute Oral Toxicity: Up-and-Down Procedure to be adopted in the Tenth Addendum to the OECD Guidelines for the Testing of Chemicals.

(5) Organization for Economic Cooperation and Development. OECD Guidelines for Testing of Chemicals. Guideline 403: Acute Inhalation Toxicity. Adopted: May 12, 1981.

(6) Organization for Economic Cooperation and Development. OECD Guidelines for Testing of Chemicals. Guideline 420: Acute Oral Toxicity Fixed Dose Method. Adopted: July 17, 1992.

(7) Organization for Economic Cooperation and Development. OECD Guidelines for Testing of Chemicals. Guideline 423: Acute Oral Toxicity Acute Toxic Class Method. Adopted: March 22, 1996.

(8) U. S. EPA. Interim Policy for Particle Size and Limit Concentration Issues in Inhalation Toxicity Studies. 2/1/94. Health Effects Division, Office of Pesticide Programs.

### § 799.9305 TSCA Repeated dose 28–day oral toxicity study in rodents.

(a) *Scope*—(1) *Applicability*. This section is intended to meet testing requirements of the Toxic Substances Control Act (TSCA) (15 U.S.C. 2601).

(2) *Source*. The source material used in developing this TSCA test guideline is the Office of Prevention, Pesticides and Toxic Substances (OPPTS) harmonized test guideline 870.3050 (July 2000, final guidelines). This source is available at the address in paragraph (h) of this section.

(b) *Purpose*. (1) In the assessment and evaluation of the toxic characteristics of a chemical, the determination of oral toxicity using repeated doses may be carried out after initial information on toxicity has been obtained by acute testing. This study provides information on the possible health hazards likely to arise from repeated exposure over a relatively limited period of time. The method comprises the basic repeated dose toxicity study that may be used for chemicals on which a 90–day study is not warranted (*e.g.,* when the production volume does not exceed certain limits) or as a preliminary to a long term study. The duration of exposure should normally be 28 days although a 14–day study may be appropriate in certain circumstances; justification for use of a 14–day exposure period should be provided.

(2) This section places emphasis on neurological effects as a specific endpoint, and the need for careful clinical observations of the animals, so as to obtain as much information as possible, is stressed. The method should identify chemicals with neurotoxic potential, which may warrant further in-depth investigation of this aspect. In addition, the method may give an indication of immunological effects and reproductive organ toxicity.

(c) *Definitions*. The definitions in section 3 of TSCA and in 40 CFR Part 792—Good Laboratory Practice Standards apply to this section. The following definitions also apply to this section.

*Dosage* is a general term comprising of dose, its frequency and the duration of dosing.

*Dose* is the amount of test substance administered. Dose is expressed as weight (g, mg) or as weight of test substance per unit weight of test animal (e.g., mg/kg), or as constant dietary concentrations (parts per million (ppm)).

*No-observed-effects level (NOEL)* is the maximum dose used in a study which produces no adverse effects. The NOEL is usually expressed in terms of the weight of a test substance given daily per unit weight of test animals (milligrams per kilograms per day).

(d) *Principle of the test*. The test substance is orally administered daily in graduated doses to several groups of experimental animals, one dose level per group for a period of 28 days. During the period of administration the animals are observed closely, each day for signs of toxicity. Animals which die or are sacrificed during the test are necropsied and at the conclusion of the test surviving animals are sacrificed and necropsied.

(e) *Description of the method*—(1) *Selection of animal species*. The preferred rodent species is the rat, although other rodent species may be used. Commonly used laboratory strains of young healthy adult animals should be employed. The females should be nulliparous and non-pregnant. Dosing should begin as soon as possible after weaning and, in any case, before the animals are 9 weeks old. At the commencement of the study the weight variation of animals used should be minimal and not exceed ± 20% of the mean weight of each sex. Where a repeated dose oral study is conducted as

a preliminary to a long term study, preferably animals from the same strain and source should be used in both studies.

(2) *Housing and feeding conditions.* The temperature in the experimental animal room should be 22 °C (± 3 °C). Although the relative humidity should be at least 30% and preferably not to exceed 70% other than during room cleaning, the aim should be 50–60%. Lighting should be artificial, the sequence being 12 hours light, 12 hours dark. For feeding, conventional laboratory diets may be used with an unlimited supply of drinking water. The choice of diet may be influenced by the need to ensure a suitable admixture of a test substance when administered by this method. Animals may be housed individually, or be caged in small groups of the same sex; for group caging, no more than five animals should be housed per cage.

(3) *Preparation of animals.* Healthy young adult animals must be randomly assigned to the control and treatment groups. Cages should be arranged in such a way that possible effects due to cage placement are minimized. The animals are identified uniquely and kept in their cages for at least 5 days prior to the start of the study to allow for acclimatization to the laboratory conditions.

(4) *Preparation of doses.* (i) The test compound must be administered by gavage or via the diet or drinking water. The method of oral administration is dependent on the purpose of the study, and the physical/chemical properties of the test material.

(ii) Where necessary, the test substance is dissolved or suspended in a suitable vehicle. It is recommended that, wherever possible, the use of an aqueous solution/suspension be considered first, followed by consideration of a solution/emulsion in oil (e.g., corn oil) and then by possible solution in other vehicles. For vehicles other than water the toxic characteristics of the vehicle must be known. The stability of the test substance in the vehicle should be determined.

(f) *Procedure*—(1)*Number and sex of animals.* At least 10 animals (five female and five male) should be used at each dose level. If interim sacrifices are planned, the number should be increased by the number of animals scheduled to be sacrificed before the completion of the study. Consideration should be given to an additional satellite group of 10 animals (five per sex) in the control and in the top dose group for observation of reversibility, persistence, or delayed occurrence of toxic effects, for at least 14 days post treatment.

(2) *Dosage.* (i) Generally, at least three test groups and a control group should be used, but if from assessment of other data, no effects would be expected at a dose of 1000 mg/kg bodyweight/per day, a limit test may be performed. If there are no suitable data available, a range finding study may be performed to aid the determination of the doses to be used. Except for treatment with the test substance, animals in the control group should be handled in an identical manner to the test group subjects. If a vehicle is used in administering the test substance, the control group should receive the vehicle in the highest volume used.

(ii) Dose levels should be selected taking into account any existing toxicity and (toxico-) kinetic data available for the test compound or related materials. The highest dose level should be chosen with the aim of inducing toxic effects but not death or severe suffering. Thereafter, a descending sequence of dose levels should be selected with a view to demonstrating any dosage related response and NOEL at the lowest dose level. Two to four fold intervals are frequently optimal for setting the descending dose levels and addition of a fourth test group is often preferable to using very large intervals (e.g., more than a factor of 10) between dosages.

(3) *Limit test.* If a test at one dose level of at least 1000 mg/kg body weight/day or, for dietary or drinking water administration, an equivalent percentage in the diet, or drinking water (based upon body weight determinations), using the procedures described for this study, produces no observable toxic effects and if toxicity would not be expected based upon data from structurally related compounds, then a full study using three dose levels may not be considered necessary. The limit test applies except when human exposure indicates the need for a higher dose level to be used.

(4) *Administration of doses.* (i) The animals are dosed with the test substance daily 7 days each week for a period of 28 days; use of a 5–day per week dosing regime or a 14–day exposure period needs to be justified. When the test substance is administered by gavage, this should be done in a single dose to the animals using a stomach tube or a suitable intubation cannula. The maximum volume of liquid that can be administered at one time depends on the size of the test animal. The volume should not exceed 1ml/100g body weight, except in the case of aqueous solutions where 2ml/100g body weight may be used. Except for irritating or corrosive substances which will normally reveal exacerbated effects with higher concentrations, variability in test volume should be minimized by adjusting the concentration to ensure a constant volume at all dose levels.

(ii) For substances administered via the diet or drinking water it is important to ensure that the quantities of the test substance involved do not interfere with normal nutrition or water balance. When the test substance is administered in the diet either a constant dietary concentration (parts per million (ppm)) or a constant dose level in terms of the animals' body weight may be used; the alternative used must be specified. For a substance administered by gavage, the dose should be given at similar times each day, and adjusted as necessary to maintain a constant dose level in terms of animal body weight. Where a repeated dose study is used as a preliminary to a long term study, a similar diet should be used in both studies.

(5) *Observations.* (i) The observation period should be 28 days, unless the study duration is 14 days (see paragraph (b)(1) of this section). Animals in a satellite group scheduled for follow-up observations should be kept for at least a further 14 days without treatment to detect delayed occurrence, or persistence of, or recovery from toxic effects.

(ii) General clinical observations should be made at least once a day, preferably at the same time(s) each day and considering the peak period of anticipated effects after dosing. The health condition of the animals should be recorded. At least twice daily, all animals are observed for morbidity and mortality.

(iii) Once before the first exposure (to allow for within-subject comparisons), and at least once a week thereafter, detailed clinical observations should be made in all animals. These observations should be made outside the home cage in a standard arena and preferably at the same time, each time. They should be carefully recorded, preferably using scoring systems, explicitly defined by the testing laboratory. Effort should be made to ensure that variations in the test conditions are minimal and that observations are preferably conducted by observers unaware of the treatment. Signs noted should include, but not be limited to, changes in skin, fur, eyes, mucous membranes, occurrence of secretions and excretions and autonomic activity (e.g., lacrimation, piloerection, pupil size, unusual respiratory pattern). Changes in gait, posture and response to handling as

well as the presence of clonic or tonic movements, stereotypies (e.g., excessive grooming, repetitive circling) or bizarre behaviour (e.g., self-mutilation, walking backwards) should also be recorded.

(iv) In the fourth exposure week sensory reactivity to stimuli of different types (see paragraph (h)(2) of this section) (e.g., auditory, visual and proprioceptive stimuli), assessment of grip strength and motor activity assessment should be conducted. Further details of the procedures that could be followed are given in the respective references. However, alternative procedures than those referenced could also be used. Examples of procedures for observation are described in the references in paragraphs (h)(1), (h)(2), (h)(3), (h)(4), and (h)(5) of this section.

(v) Functional observations conducted in the fourth exposure week may be omitted when the study is conducted as a preliminary study to a subsequent subchronic (90–day) study. In that case, the functional observations should be included in this follow-up study. On the other hand, the availability of data on functional observations from the repeated dose study may enhance the ability to select dose levels for a subsequent subchronic study.

(vi) Exceptionally, functional observations may also be omitted for groups that otherwise reveal signs of toxicity to an extent that would significantly interfere with the functional test performance.

(6) *Body weight and food/water consumption.* All animals should be weighed at least once a week. Measurements of food consumption should be made at least weekly. If the test substance is administered via the drinking water, water consumption should also be measured at least weekly.

(7) *Hematology.* (i) The following hematological examinations should be made at the end of the test period: hematocrit, hemoglobin concentration, erythrocyte count, total and differential leukocyte count, platelet count and a measure of blood clotting time/potential.

(ii) Blood samples should be taken from a named site just prior to or as part of the procedure for sacrificing the animals, and stored under appropriate conditions.

(8) *Clinical Biochemistry.* (i) Clinical biochemistry determinations to investigate major toxic effects in tissues and, specifically, effects on kidney and liver, should be performed on blood samples obtained of all animals just prior to or as part of the procedure for sacrificing the animals (apart from those found moribund and/or intercurrently sacrificed). Overnight fasting of the animals prior to blood sampling is recommended.[1] Investigations of plasma or serum shall include sodium, potassium, glucose, total cholesterol, urea, creatinine, total protein and albumin, at least two enzymes indicative of hepatocellular effects (such as alanine aminotransferase, aspartate aminotransferase, alkaline phosphatase, gamma glutamyl transpeptidase, and sorbitol dehydrogenase). Measurements of additional enzymes (of hepatic or other origin) and bile acids may provide useful information under certain circumstances.

(ii) Optionally, the following urinalysis determinations could be performed during the last week of the study using timed urine volume collection; appearance, volume, osmolality or specific gravity, pH, protein, glucose and blood and blood cells.

(iii) In addition, studies to investigate serum markers of general tissue damage should be considered. Other determinations that should be carried out if the known properties of the test substance may, or are suspected to, affect related metabolic profiles include calcium, phosphate, fasting triglycerides, specific hormones, methemoglobin and cholinesterase. These must to be identified for chemicals in certain classes or on a case-by-case basis.

(iv) Overall, there is a need for a flexible approach, depending on the species and the observed and/or expected effect with a given compound.

(v) If historical baseline data are inadequate, consideration should be given to determination of hematological and clinical biochemistry variables before dosing commences.

(9) *Pathology*—(i)*Gross necropsy.* (A) All animals in the study must be subjected to a full, detailed gross necropsy which includes careful examination of the external surface of the body, all orifices, and the cranial, thoracic and abdominal cavities and their contents. The liver, kidneys, adrenals, testes, epididymides, thymus, spleen, brain and heart of all animals (apart from those found moribund and/or intercurrently sacrificed) should be trimmed of any adherent tissue, as appropriate, and their wet weight taken as soon as possible after dissection to avoid drying.

(B) The following tissues should be preserved in the most appropriate fixation medium for both the type of tissue and the intended subsequent histopathological examination: all gross lesions, brain (representative regions including cerebrum, cerebellum and pons), spinal cord, stomach, small and large intestines (including Peyer's patches), liver, kidneys, adrenals, spleen, heart, thymus, thyroid, trachea and lungs (preserved by inflation with fixative and then immersion), ovaries, uterus, testes, epididymides, accessory sex organs (e.g., prostate, seminal vesicles), urinary bladder, lymph nodes (preferably one lymph node covering the route of administration and another one distant from the route of administration to cover systemic effects), peripheral nerve (sciatic or tibial) preferably in close proximity to the muscle, and a section of bone marrow (or, alternatively, a fresh mounted bone marrow aspirate). The clinical and other findings may suggest the need to examine additional tissues. Also any organs considered likely to be target organs based on the known properties of the test substance should be preserved.

(ii) *Histopathology.* (A) Full histopathology should be carried out on the preserved organs and tissues of all animals in the control and high dose groups. These examinations should be extended to animals of all other dosage groups, if treatment-related changes are observed in the high dose group.

(B) All gross lesions must be examined.

(C) When a satellite group is used, histopathology should be performed on tissues and organs identified as showing effects in the treated groups.

(g) *Data and reporting*—(1) *Data.* (i) Individual data should be provided. Additionally, all data should be summarized in tabular form showing for each test group the number of animals at the start of the test, the number of animals found dead during the test or sacrificed for humane reasons and the time of any death or humane sacrifice, the number showing signs of toxicity, a description of the signs of toxicity observed, including time of onset, duration, and severity of any toxic effects, the number of animals showing lesions, the type of lesions and the percentage of animals displaying each type of lesion.

[1] For a number of measurements in serum and plasma, most notably for glucose, overnight fasting would be preferable. The major reason for this preference is that the increased variability which would inevitably result from non-fasting, would tend to mask more subtle effects and make interpretation difficult. On the other hand, however, overnight fasting may interfere with the general metabolism of the animals and, particularly in feeding studies, may disturb the daily exposure to the test substance. If overnight fasting is adopted, clinical biochemical determinations should be performed after the conduct of functional observations in week 4 of the study.

(ii) When possible, numerical results should be evaluated by an appropriate and generally acceptable statistical method. The statistical methods should be selected during the design of the study.

(2) *Test report.* The test report must include the following information:

(i) Test substance:

(A) Physical nature, purity and physicochemical properties.

(B) Identification data.

(ii) Vehicle (if appropriate): Justification for choice of vehicle, if other than water.

(iii) Test animals:

(A) Species/strain used.

(B) Number, age and sex of animals.

(C) Source, housing conditions, diet, etc.

(D) Individual weights of animals at the start of the test.

(iv) Test conditions:

(A) Rationale for dose level selection.

(B) Details of test substance formulation/diet preparation, achieved concentration, stability and homogeneity of the preparation.

(C) Details of the administration of the test substance.

(D) Conversion from diet/drinking water test substance concentration (parts per million (ppm)) to the actual dose (mg/kg body weight/day), if applicable.

(E) Details of food and water quality.

(v) Results:

(A) Body weight/body weight changes.

(B) Food consumption, and water consumption, if applicable.

(C) Toxic response data by sex and dose level, including signs of toxicity.

(D) Nature, severity and duration of clinical observations (whether reversible or not).

(E) Sensory activity, grip strength and motor activity assessments.

(F) Hematological tests with relevant base-line values.

(G) Clinical biochemistry tests with relevant base-line values.

(H) Body weight at sacrificing and organ weight data.

(I) Necropsy findings.

(J) A detailed description of all histopathological findings.

(K) Absorption data if available.

(L) Statistical treatment of results, where appropriate.

(vi) Discussion of results.

(vii) Conclusions.

(h) *References.* For additional background information on this test guideline, the following references should be consulted. These references are available for inspection at the TSCA Nonconfidential Information Center, Rm. NE–B607, Environmental Protection Agency, 401 M St., SW., Washington, DC, 12 noon to 4 p.m., Monday through Friday, except legal holidays.

(1) Tupper, D.E., Wallace, R.B. (1980). Utility of the Neurologic Examination in Rats. *Acta Neurobiological Exposure*, 40:999–1003.

(2) Gad, S.C. (1982). A Neuromuscular Screen for Use in Industrial Toxicology. *Journal of Toxicology and Environmental Health*, 9:691–704.

(3) Moser, V.C., McDaniel, K.M., Phillips, P.M. (1991). Rat Strain and Stock Comparisons Using a Functional Observational Battery: Baseline Values and Effects of Amitraz. *Toxicology and Applied Pharmacology*, 108:267–283.

(4) Meyer O.A., Tilson H.A., Byrd W.C., Riley M.T. (1979). A Method forthe Routine Assessment of Fore- and Hindlimb Grip Strength of Rats and Mice. *Neurobehavioral Toxicology*, 1:233–236.

(5) Crofton K.M., Howard J.L., Moser V.C., Gill M.W., Reiter L.W., Tilson H.A., MacPhail R.C. (1991). Interlaboratory Comparison of Motor Activity Experiments: Implication for Neurotoxicological Assessments. *Neurotoxicology and Teratology*, 13:599–609.

### § 799.9310 TSCA 90-day oral toxicity in rodents.

(a) *Scope.* This section is intended to meet the testing requirements under section 4 of the Toxic Substances Control Act (TSCA). In the assessment and evaluation of the toxic characteristics of a chemical, the determination of subchronic oral toxicity may be carried out after initial information on toxicity has been obtained by acute testing. The subchronic oral study has been designed to permit the determination of the no-observed-effects level (NOEL) and toxic effects associated with continuous or repeated exposure to a test substance for a period of 90 days. This study is not capable of determining those effects that have a long latency period for development (e.g., carcinogenicity and life shortening). Extrapolation from the results of this study to humans is valid only to a limited degree. However, it can useful in providing information on health hazards likely to arise from repeated exposure by the oral route over a limited period of time, such as target organs, the possibilities of accumulation, and can be of use in selecting dose levels for chronic studies and for establishing safety criteria for human exposure.

(b) *Source.* The source material used in developing this TSCA test guideline is the Office of Prevention, Pesticides, and Toxic Substances (OPPTS) harmonized test guideline 870.3100 (August 1998, final guideline). This source is available at the address in paragraph (h) of this section.

(c) *Definitions.* The following definitions apply to this section.

*Cumulative toxicity* is the adverse effects of repeated doses occurring as a result of prolonged action on, or increased concentration of, the administered test substance or its metabolites in susceptible tissue.

*Dose* in a subchronic oral study is the amount of test substance administered daily via the oral route (gavage, drinking water or diet) for a period of 90 days. Dose is expressed as weight of the test substance (grams, milligrams) per unit body weight of test animal (milligram per kilogram) or as weight of the test substance in parts per million in food or drinking water per day.

*No-observed-effects level (NOEL)* is the maximum dose used in a study which produces no adverse effects. The NOEL is usually expressed in terms of the weight of a test substance given daily per unit weight of test animal (milligrams per kilogram per day).

*Subchronic oral toxicity* is the adverse effects occurring as a result of the repeated daily exposure of experimental animals to a chemical by the oral route for a part (approximately 10%) of the test animal's life span.

*Target organ* is any organ of a test animal showing evidence of an effect induced by a test substance.

(d) *Limit test.* If a test at one dose level of at least 1,000 mg/kg body weight (expected human exposure may indicate the need for a higher dose level), using the procedures described for this study, produces no observable toxic effects or if toxic effects would not be expected based upon data of structurally related compounds, then a full study using three dose levels might not be necessary.

(e) *Test procedures*—(1) *Animal selection*—(i) *Species and strain.* A variety of rodent species may be used, although the rat is the preferred species. Commonly used laboratory strains must be employed.

(ii) *Age/weight.* (A) Testing should be started with young healthy animals as soon as possible after weaning and acclimatization.

(B) Dosing of rodents should generally begin no later than 8–9 weeks of age.

(C) At the commencement of the study the weight variation of animals used must be within 20% of the mean weight for each sex.

(iii) *Sex.* Equal numbers of animals of each sex must be used at each dose

level, and the females shall be nulliparous and nonpregnant.

(iv) *Numbers.* (A) At least 20 rodents (10 males and 10 females) at each dose level.

(B) If interim sacrifices are planned, the number must be increased by the number of animals scheduled to be sacrificed before the completion of the study.

(C) To avoid bias, the use of adequate randomization procedures for the proper allocation of animals to test and control groups is required.

(D) Each animal must be assigned a unique identification number. Dead animals, their preserved organs and tissues, and microscopic slides must be identified by reference to the animal's unique number.

(v) *Husbandry.* (A) Animals may be group-caged by sex, but the number of animals per cage must not interfere with clear observation of each animal. The biological properties of the test substance or toxic effects (e.g., morbidity, excitability) may indicate a need for individual caging.

(B) The temperature of the experimental animal rooms should be at 22 ± 3 °C.

(C) The relative humidity of the experimental animal rooms should be 50 ± 20%.

(D) Where lighting is artificial, the sequence should be 12 hours light/12 hours dark.

(E) Control and test animals must be fed from the same batch and lot. The feed should be analyzed to assure adequacy of nutritional requirements of the species tested and for impurities that might influence the outcome of the test. For feeding, conventional laboratory diets may be used with an unlimited supply of drinking water.

(F) The study should not be initiated until animals have been allowed a period of acclimatization/quarantine to environmental conditions, nor should animals from outside sources be placed on test without an adequate period of quarantine. An acclimation period of at least five days is recommended.

(2) *Control and test substances.* (i) Where necessary, the test substance is dissolved or suspended in a suitable vehicle. If a vehicle or diluent is needed, the vehicle should not elicit toxic effects or substantially alter the chemical or toxicological properties of the test substance. It is recommended that wherever possible the usage of an aqueous solution be considered first, followed by consideration of a solution in oil and then solution in other vehicles.

(ii) If possible, one lot of the test substance tested should be used throughout the duration of the study and the research sample should be stored under conditions that maintain its purity and stability. Prior to the initiation of the study, there should be a characterization of the test substance, including the purity of the test compound and, if technically feasible, the names and quantities of contaminants and impurities.

(iii) If the test or control substance is to be incorporated into feed or another vehicle, the period during which the test substance is stable in such a mixture should be determined prior to the initiation of the study. Its homogeneity and concentration should be determined prior to the initiation of the study and periodically during the study. Statistically randomized samples of the mixture should be analyzed to ensure that proper mixing, formulation, and storage procedures are being followed, and that the appropriate concentration of the test or control substance is contained in the mixture.

(3) *Control groups.* A concurrent control group is required. This group must be an untreated or sham-treated control group or, if a vehicle is used in administering the test substance, a vehicle control group. If the toxic properties of the vehicle are not known or cannot be made available, both untreated and vehicle control groups are required.

(4) *Satellite group.* A satellite group of 20 animals (10 animals per sex) may be treated with the high dose level for 90 days and observed for reversibility, persistence, or delayed occurrence of toxic effects for a post-treatment period of appropriate length, normally not less than 28 days. In addition, a control group of 20 animals (10 animals of each sex) should be added to the satellite study.

(5) *Dose levels and dose selection.* (i) In subchronic toxicity tests, it is desirable to determine a dose-response relationship as well as a NOEL. Therefore, at least three dose levels plus a control and, where appropriate, a vehicle control (corresponding to the concentration of vehicle at the highest dose level) must be used. Doses should be spaced appropriately to produce test groups with a range of toxic effects. The data should be sufficient to produce a dose-response curve.

(ii) The highest dose level should result in toxic effects but not produce an incidence of fatalities which would prevent a meaningful evaluation.

(iii) The intermediate dose levels should be spaced to produce a gradation of toxic effects.

(iv) The lowest dose level should produce no evidence of toxicity.

(6) *Administration of the test substance.* (i) If the test substance is administered by gavage, the animals are dosed with the test substance on a 7–day per week basis for a period of at least 90 days. However, based primarily on practical considerations, dosing by gavage on a 5–day per week basis is acceptable. If the test substance is administered in the drinking water, or mixed in the diet, then exposure should be on a 7–day per week basis.

(ii) All animals must be dosed by the same method during the entire experimental period.

(iii) For substances of low toxicity, it is important to ensure that when administered in the diet the quantities of the test substance involved do not interfere with normal nutrition. When the test substance is administered in the diet, either a constant dietary concentration (parts per million) or a constant dose level in terms of body weight should be used; the alternative used should be specified.

(iv) For a substance administered by gavage, the dose should be given at approximately the same time each day, and adjusted at intervals (weekly or biweekly) to maintain a constant dose level in terms of body weight.

(7) *Observation period.* (i) The animals must be observed for a period of 90 days.

(ii) Animals in the satellite group (if used) scheduled for follow-up observations should be kept for at least 28 days further without treatment to detect recovery from, or persistence of, toxic effects.

(8) *Observation of animals.* (i) Observations must be made at least twice each day for morbidity and mortality. Appropriate actions should be taken to minimize loss of animals to the study (e.g., necropsy or refrigeration of those animals found dead and isolation or sacrifice of weak or moribund animals). General clinical observations should be made at least once a day, preferably at the same time each day, taking into consideration the peak period of anticipated effects after dosing. The clinical condition of the animal should be recorded.

(ii) A careful clinical examination must be made at least once weekly. Observations should be detailed and carefully recorded, preferably using explicity defined scales. Observations should include, but not be limited to, evaluation of skin and fur, eyes and mucous membranes, respiratory and circulatory effects, autonomic effects such as salivation, central nervous system effects, including tremors and convulsions, changes in the level of activity, gait and posture, reactivity to

handling or sensory stimuli, altered strength, and stereotypes or bizarre behavior (e.g., self-mutilation, walking backwards).

(iii) Signs of toxicity should be recorded as they are observed including the time of onset, degree and duration.

(iv) Measurements of food consumption and water consumption, if drinking water is the exposure route, must be made weekly.

(v) Individual weights of animals must be determined shortly before the test substance is administered, weekly thereafter, and at death.

(vi) Moribund animals should be removed and sacrificed when noticed and the time of death should be recorded as precisely as possible.

(vii) At termination, all survivors in the treatment and control groups must be sacrificed.

(9) *Clinical pathology.* Hematology and clinical chemistry examinations must be made on all animals, including controls, of each sex in each group. The hematology and clinical chemistry parameters should be examined at terminal sacrifice at the end of the study. Overnight fasting of the animals prior to blood sampling is recommended. Overall, there is a need for a flexible approach in the measures examined, depending on the observed or expected effects from a chemical, and in the frequency of measures, depending on the duration of potential chemical exposures.

(i) Hematology. The recommended parameters are red blood cell count, hemoglobin concentration, hematocrit, mean corpuscular volume, mean corpuscular hemoglobin, and mean corpuscular hemoglobin concentration, white blood cell count, differential leukocyte count, platelet count, and a measure of clotting potential, such as prothrombin time or activated partial thromboplastin time.

(ii) Clinical chemistry. (A) Parameters which are considered appropriate to all studies are electrolyte balance, carbohydrate metabolism, and liver and kidney function. The selection of specific tests will be influenced by observations on the mode of action of the substance and signs of clinical toxicity.

(B) The recommended clinical chemistry determinations are potassium, sodium, glucose, total cholesterol, urea nitrogen, creatinine, total protein and albumin. More than 2 hepatic enzymes, (such as alanine aminotransferase, aspartate aminotransferase, alkaline phosphatase, sorbitol dehydrogenase, or gamma glutamyl transpeptidase) should also be measured. Measurements of addtional enzymes (of hepatic or other origin) and bile acids, may also be useful.

(C) If a test chemical has an effect on the hematopoietic system, reticulocyte counts and bone marrow cytology may be indicated.

(D) Other determinations that should be carried out if the test chemical is known or suspected of affecting related measures include calcium, phosphorus, fasting triglycerides, hormones, methemoglobin, and cholinesterases.

(iii) Optionally, the following urinalysis determinations could be performed during the last week of the study using timed urine volume collection: appearance, volume, osmolality or specific gravity, pH, protein, glucose and blood/blood cells.

(10) *Ophthalmological examination.* Ophthalmological examinations using an ophthalmoscope or an equivalent device must be made on all animals prior to the administration of the test substance and on all high dose and control groups at termination. If changes in the eyes are detected, all animals in the other dose groups must be examined.

(11) *Gross necropsy.* (i) All animals must be subjected to a full gross necropsy which includes examination of the external surface of the body, all orifices, and the cranial, thoracic and abdominal cavities and their contents.

(ii) The liver, kidneys, adrenals, testes, epididymides, ovaries, uterus, thymus, spleen, brain, and heart must be trimmed and weighed wet, as soon as possible after dissection.

(iii) The following organs and tissues, or representative samples thereof, should be preserved in a suitable medium for possible future histopathological examination:

(A) Digestive system—salivary glands, esophagus, stomach, duodenum, jejunum, ileum, cecum, colon, rectum, liver, pancreas, gallbladder (when present).

(B) Nervous system—brain (including sections of medulla/pons, cerebellum and cerebrum), pituitary, peripheral nerve (sciatic or tibial, preferably in close proximity to the muscle), spinal cord (three levels: cervical, mid-thoracic and lumbar), eyes (retina, optic nerve).

(C) Glandular system—adrenals, parathyroid, thyroid.

(D) Respiratory system—trachea, lungs, pharynx, larynx, nose.

(E) Cardiovascular/hemopoietic system—aorta, heart, bone marrow (and/or fresh aspirate), lymph nodes (preferably one lymph node covering the route of administration and another one distant from the route of administration to cover systemic effects), spleen, thymus.

(F) Urogenital system—kidneys, urinary bladder, prostate, testes, epididymides, seminal vesicle(s), uterus, ovaries, female mammary gland.

(G) Others—all gross lesions and masses, skin.

(12) *Histopathology.* (i) The following histopathology must be performed:

(A) Full histopathology on the organs and tissues, listed in paragraph (e)(11)(iii) of this section, of all rodents in the control and high dose groups, and all rodents that died or were sacrificed during the study.

(B) All gross lesions in all animals.

(C) Target tissues in all animals.

(D) When a satellite group is used, histopathology should be performed on tissues and organs identified as showing effects in the treated groups.

(ii) If excessive early deaths or other problems occur in the high dose group compromising the significance of the data, the next dose level should be examined for complete histopathology.

(iii) An attempt should be made to correlate gross observations with microscopic findings.

(iv) Tissues and organs designated for microscopic examination should be fixed in 10% buffered formalin or a recognized suitable fixative as soon as necropsy is performed and no less than 48 hours prior to trimming.

(f) *Data and reporting*—(1) *Treatment of results.* (i) Data must be summarized in tabular form, showing for each test group the number of animals at the start of the test, the number of animals showing lesions, the types of lesions and the percentage of animals displaying each type of lesion.

(ii) When applicable, all observed results, qualitative and quantitative, should be evaluated by an appropriate and generally accepted statistical method. Any generally accepted statistical methods may be used; the statistical methods, including significance criteria, should be selected during the design of the study.

(2) *Evaluation of study results.* The findings of a subchronic oral toxicity study should be evaluated in conjunction with the findings of preceding studies and considered in terms of the toxic effects and the necropsy and histopathological findings. The evaluation must include the relationship between the dose of the test substance and the presence or absence, the incidence and severity, of abnormalities, including behavioral and clinical abnormalities, gross lesions, identified target organs, body weight changes, effects on mortality and any other general or specific toxic effects. A properly conducted subchronic test should provide a satisfactory estimation

of a NOEL. It also can indicate the need for an additional longer-term study and provide information on the selection of dose levels.

(3) *Test report.* In addition to reporting requirements specified under EPA Good Laboratory Practice Standards at 40 CFR part 792, subpart J, the following specific information must be reported:

(i) Test substance characterization should include:

(A) Chemical identification.

(B) Lot or batch number.

(C) Physical properties.

(D) Purity/impurities.

(ii) Identification and composition of any vehicle used.

(iii) Test system should contain data on:

(A) Species and strain of animals used and rationale for selection if other than that recommended.

(B) Age including body weight data and sex.

(C) Test environment including cage conditions, ambient temperature, humidity, and light/dark periods.

(D) Identification of animal diet.

(E) Acclimation period.

(iv) Test procedure should include the following data:

(A) Method of randomization used.

(B) Full description of experimental design and procedure.

(C) Dose regimen including levels, methods, and volume.

(v) Test results should include:

(A) Group animal data. Tabulation of toxic response data by species, strain, sex and exposure level for:

(*1*) Number of animals exposed.

(*2*) Number of animals showing signs of toxicity.

(*3*) Number of animals dying.

(B) Individual animal data. Data should be presented as summary (group mean) as well as for individual animals.

(*1*) Date of death during the study or whether animals survived to termination.

(*2*) Date of observation of each abnormal sign and its subsequent course.

(*3*) Body weight data.

(*4*) Feed and water (if collected) consumption data.

(5) Achieved dose (mg/kg/day) as a time-weighted average if the test substance is administered in the diet or drinking water.

(*6*) Results of ophthalmological examination.

(*7*) Results of hematological tests performed.

(*8*) Results of clinical chemistry tests performed.

(*9*) Results of urinalysis, if performed.

(*10*) Necropsy findings, including absolute and relative (to body weight) organ weight data.

(*11*) Detailed description of all histopathological findings.

(*12*) Statistical treatment of results, where appropriate.

(g) *Quality control.* A system must be developed and maintained to assure and document adequate performance of laboratory equipment. The study must be conducted in compliance with 40 CFR Part 792—Good Laboratory Practice Standards.

(h) *References.* For additional background information on this test guideline, the following references should be consulted. These references are available for inspection at the TSCA Nonconfidential Information Center, Rm. NE–B607, Environmental Protection Agency, 401 M St., NW., Washington, DC, 12 noon to 4 p.m., Monday through Friday, except legal holidays.

(1) Boyd, E.M. Chapter 14. Pilot Studies, 15. Uniposal Clinical Parameters, 16. Uniposal Autopsy Parameters. Predictive Toxicometrics. Williams and Wilkins, Baltimore (1972).

(2) Fitzhugh, O.G. *Subacute Toxicity, Appraisal of the Safety of Chemicals in Foods, Drugs and Cosmetics.* The Association of Food and Drug Officials of the United States (1959, 3rd Printing 1975) pp. 26–35.

(3) Organization for Economic Cooperation and Development. OECD uidelines for Testing of Chemicals. Guideline 408: Subchronic Oral Toxicity-Rodent: 90-day Study, Adopted: May 12, 1981.

(4) Weingand K., Brown G., Hall R. et al. Harmonization of Animal Clinical Pathology Testing in Toxicity and Safety Studies. *Fundam. & Appl. Toxicol.* 29:198-201. (1996)

**§ 799.9325 TSCA 90-day dermal toxicity.**

(a) *Scope.* This section is intended to meet the testing requirements under section 4 of the Toxic Substances Control Act (TSCA). In the assessment and evaluation of the toxic characteristics of a chemical, the determination of subchronic dermal toxicity may be carried out after initial information on toxicity has been obtained by acute testing. The subchronic dermal study has been designed to permit the determination of the no-observed-effects level (NOEL) and toxic effects associated with continuous or repeated exposure to a test substance for a period of 90 days. This study is not capable of determining those effects that have a long latency period for development (e.g., carcinogenicity and life shortening). Extrapolation from the results of this study to humans is valid only to a limited degree. It can, however, provide useful information on the degree of percutaneous absorption, target organs, the possibilities of accumulation, and can be of use in selecting dose levels for chronic studies and for establishing safety criteria for human exposure.

(b) *Source.* The source material used in developing this TSCA test guideline is the Office of Prevention, Pesticides, and Toxic Substances (OPPTS) harmonized test guideline 870.3250 (August 1998, final guideline). This source is available at the address in paragraph (h) of this section.

(c) *Definitions.* The following definitions also apply to this section.

*Cumulative toxicity* is the adverse effect of repeated doses occurring as a result of prolonged action or increased concentration of the administered test substance or its metabolites in susceptible tissues.

*Dose* in a subchronic dermal study is the amount of test substance applied daily to the skin for 90 days. Dose is expressed as weight of the test substance (grams, milligrams), per unit body weight of test animal (milligrams per kilogram), or as weight of the test substance per unit of surface area (milligrams per square centimeter) per day.

*No-observed-effects level (NOEL)* is the maximum dose used in a study which produces no adverse effects. The NOEL is expressed in terms of the weight of a test substance given daily per unit weight of test animal (milligrams per kilogram per day).

*Subchronic dermal toxicity* is the adverse effects occurring as a result of the repeated daily exposure of experimental animals to a chemical by the dermal route for a part of the test animal's life span.

*Target organ* is any organ of a test animal showing evidence of an effect induced by a test substance.

(d) *Limit test.* If a test at one dose level of at least 1,000 mg/kg body weight (expected human exposure may indicate the need for a higher dose level), using the procedures described for this section, produces no observable toxic effects or if toxic effects would not be expected based upon data on structurally related compounds, a full study using three dose levels might not be necessary.

(e) *Test procedures*—(1) *Animal selection*—(i) *Species and strain.* A mammalian species must be used for testing. The rat, rabbit, or guinea pig may be used. Commonly used laboratory strains must be employed. If other mammalian species are used, the tester must provide justification/reasoning for their selection. When a subchronic dermal study is conducted

as a preliminary to a chronic dermal study, the same species and strain must be used in both studies.

(ii) *Age/weight.* (A) Testing should be started with young healthy animals as soon as possible after weaning and acclimatization.

(B) Dosing should generally begin in guinea pigs between 5–6 weeks of age, in rats between 8–9 weeks of age, and in rabbits at least 12 weeks old.

(C) At the commencement of the study, the weight variation of animals used must be within 20% of the mean weight for each sex.

(iii) *Sex.* Equal numbers of animals of each sex with healthy skin must be used at each dose level. The females shall be nulliparous and nonpregnant except for specially designed studies.

(iv) *Numbers.* (A) At least 20 animals (10 animals per sex) must be used at each dose level.

(B) If interim sacrifices are planned, the number must be increased by the number of animals scheduled to be sacrificed before completion of the study.

(C) To avoid bias, the use of adequate randomization procedures for the proper allocation of animals to test and control groups is required.

(D) Each animal must be assigned a unique identification number. Dead animals, their preserved organs and tissues, and microscopic slides must be identified by reference to the animal's unique number.

(v) *Husbandry.* (A) Animals should be housed in individual cages.

(B) The temperature of the experimental animal rooms should be at 22 ± 3 °C

(C) The relative humidity of the experimental animal rooms should be 50 ± 20%.

(D) Where lighting is artificial, the sequence should be 12 hours light/12 hours dark.

(E) Control and test animals must be fed from the same batch and lot. The feed should be analyzed to assure adequacy of nutritional requirements of the species tested and for impurities that might influence the outcome of the test. For feeding, conventional laboratory diets may be used with an unlimited supply of drinking water.

(F) The study should not be initiated until animals have been allowed a period of acclimatization/quarantine to environmental conditions, nor should animals from outside sources be placed on test without an adequate period of quarantine. An acclimation period of at least five days is recommended.

(2) *Control and test substances.* (i) Where necessary, the test substance is dissolved or suspended in a suitable vehicle. If a vehicle or diluent is needed, the vehicle should not elicit toxic effects or substantially alter the chemical or toxicological properties of the test substance. It is recommended that, whenever possible, the usage of an aqueous solution be considered first, followed by consideration of a solution of oil and then solution of other vehicles.

(ii) One lot of the test substance should be used, if possible, throughout the duration of the study, and the research sample should be stored under conditions that maintain its purity and stability. Prior to the initiation of the study, there should be a characterization of the test substance, including the purity of the test compound and if technically feasible, the name and quantities of unknown contaminants and impurities.

(iii) If the test substance is dissolved or suspended in a vehicle, the period during which the test substance is stable in such a mixture should be determined prior to the initiation of the study. Its homogeneity and concentration should be determined prior to the initiation of the study and periodically during the study. Statistically randomized samples of the mixture should be analyzed to ensure that proper mixing, formulation, and storage procedures are being followed, and that the appropriate concentration of the test or control substance is contained in the mixture.

(3) *Control groups.* A concurrent control group is required. This group must be an untreated or sham-treated control group or, if a vehicle is used in the application of the test substance, a vehicle control group. If the toxic properties of the vehicle are not known or not available, both untreated/sham-treated and vehicle control groups are required.

(4) *Satellite group.* A satellite group of 20 animals (10 animals per sex) may be treated with the high dose level for 90 days and observed for reversibility, persistence, or delayed occurrence of toxic effects for a post-treatment period of appropriate length, normally not less than 28 days. In addition a control group of 20 animals (10 animals per sex) should be added to the satellite study.

(5) *Dose levels and dose selection.* (i) In subchronic toxicity tests, it is desirable to determine a dose-response relationship as well as a NOEL. Therefore, at least three dose levels plus a control and, where appropriate, a vehicle control (corresponding to the concentration of vehicle at the highest dose level) group shall be used. Doses should be spaced appropriately to produce test groups with a range of toxic effects. The data should be sufficient to produce a dose-response curve.

(ii) The highest dose level should elicit signs of toxicity but not produce severe skin irritation or an incidence of fatality which would prevent a meaningful evaluation. If application of the test substance produces severe skin irritation, the concentration may be reduced, although this may result in a reduction in, or absence of, other toxic effects at the high dose level. If the skin has been badly damaged early in the study, it may be necessary to terminate the study and undertake a new one at lower concentrations.

(iii) The intermediate dose levels should be spaced to produce a gradation of toxic effects.

(iv) The lowest dose level should not produce any evidence of toxic effects.

(6) *Preparation of animal skin.* Shortly before testing, fur must be clipped from not less than 10% of the body surface area for application of the test substance. In order to dose approximately 10% of the body surface, the area starting at the scapulae (shoulders) to the wing of the ileum (hipbone) and half way down the flank on each side of the animal should be shaved. Shaving should be carried out approximately 24 hours before dosing. Repeated clipping or shaving is usually needed at approximately weekly intervals. When clipping or shaving the fur, care should be taken to avoid abrading the skin which could alter its permeability.

(7) *Preparation of test substance.* (i) Liquid test substances are generally used undiluted, except as indicated in paragraph (e)(5)(ii) of this section.

(ii) Solids should be pulverized when possible. The substance should be moistened sufficiently with water or, when necessary, a suitable vehicle to ensure good contact with the skin. When a vehicle is used, the influence of the vehicle on toxicity of, and penetration of the skin by, the test substance should be taken into account.

(iii) The volume of application should be kept constant, e.g., less than 300 μL for the rat; different concentrations of test solution shall be prepared for different dose levels.

(8) *Administration of test substance.* (i) The duration of exposure should be at least for 90 days.

(ii) Ideally, the animals should be treated with test substance for at least 6 hours per day on a 7-day per week basis. However, based on practical considerations, application on a 5-day per week basis is acceptable. Dosing should be conducted at approximately the same time each day.

(iii) The test substance must be applied uniformly over the treatment site.

(iv) The surface area covered may be less for highly toxic substances. As much of the area should be covered with as thin and uniform a film as possible.

(v) During the exposure period, the test substance must be held in contact with the skin with a porous gauze dressing (less than or equal to 8 ply). The test site must be further covered with nonirritating tape to retain the gauze dressing and the test substance and to ensure that the animals cannot ingest the test substance. Restrainers may be used to prevent the ingestion of the test substance, but complete immobilization is not recommended. The test substance may be wiped from the skin after the six-hour exposure period to prevent ingestion.

(9) *Observation of animals.* (i) Observations must be made at least twice each day for morbidity and mortality. Appropriate actions should be taken to minimize loss of animals to the study (e.g., necropsy or refrigeration of those animals found dead and isolation or sacrifice of weak or moribund animals). General clinical observations must be made at least once a day, preferably at the same time each day, taking into consideration the peak period of anticipated effects after dosing. The clinical condition of the animal should be recorded.

(ii) A careful clinical examination must be made at least once weekly. Observations should be detailed and carefully recorded, preferably using explicity defined scales. Observations should include, but not be limited to, evaluation of skin and fur, eyes and mucous membranes, respiratory and circulatory effects, autonomic effects such as salivation, central nervous system effects, including tremors and convulsions, changes in the level of activity, gait and posture, reactivity to handling or sensory stimuli, altered strength, and stereotypes or bizarre behavior (e.g., self-mutilation, walking backwards).

(iii) Signs of toxicity should be recorded as they are observed including the time of onset, degree and duration.

(iv) Individual weights of animals must be determined shortly before the test substance is administered, weekly thereafter, and at death.

(v) Food consumption must also be determined weekly if abnormal body weight changes are observed.

(vi) Moribund animals should be removed and sacrificed when noticed and the time of death should be recorded as precisely as possible.

(vii) At termination, all survivors in the control and treatment groups must be sacrificed.

(10) *Clinical pathology.* Hematology and clinical chemistry examinations must be made on all animals, including controls, of each sex in each group. The hematology and clinical chemistry parameters should be examined at terminal sacrifice at the end of the study. Overnight fasting of the animals prior to blood sampling is recommended. Overall, there is a need for a flexible approach in the measures examined, depending on the observed or expected effects from a chemical, and in the frequency of measures, depending on the duration of potential chemical exposures.

(i) Hematology. The recommended parameters are red blood cell count, hemoglobin concentration, hematocrit, mean corpuscular volume, mean corpuscular hemoglobin, and mean corpuscular hemoglobin concentration, white blood cell count, differential leukocyte count, platelet count, and a measure of clotting potential, such as prothrombin time or activated partial thromboplastin time.

(ii) Clinical chemistry. (A) Parameters which are considered appropriate to all studies are electrolyte balance, carbohydrate metabolism, and liver and kidney function. The selection of specific tests will be influenced by observations on the mode of action of the substance and signs of clinical toxicity.

(B) The recommended clinical chemistry determinations are potassium, sodium, glucose, total cholesterol, urea nitrogen, creatinine, total protein and albumin. More than 2 hepatic enzymes, (such as alanine aminotransferase, aspartate aminotransferase, alkaline phosphatase, sorbitol dehydrogenase, or gamma glutamyl transpeptidase) should also be measured. Measurements of additional enzymes (of hepatic or other origin) and bile acids, may also be useful.

(C) If a test chemical has an effect on the hematopoietic system, reticulocyte counts and bone marrow cytology may be indicated.

(D) Other determinations that should be carried out if the test chemical is known or suspected of affecting related measures include calcium, phosphorus, fasting triglycerides, hormones, methemoglobin, and cholinesterases.

(iii) Optionally, the following urinalysis determinations could be performed during the last week of the study using timed urine volume collection: appearance, volume, osmolality or specific gravity, pH, protein, glucose and blood/blood cells.

(11) *Ophthalmological examination.* Using an ophthalmoscope or an equivalent device, ophthalmological examinations must be made on all animals prior to the administration of the test substance and on all high dose and control groups at termination. If changes in the eyes are detected, all animals in the other dose groups must be examined.

(12) *Gross necropsy.* (i) All animals must be subjected to a full gross necropsy which includes examination of the external surface of the body, all orifices, and the cranial, thoracic and abdominal cavities and their contents.

(ii) The liver, brain, kidneys, spleen, adrenals, testes, epididymides, uterus, ovaries, thymus and heart must be trimmed and weighed wet, as soon as possible after dissection.

(iii) The following organs and tissues, or representative samples thereof, must be preserved in a suitable medium for possible future histopathological examination:

(A) Digestive system—salivary glands, esophagus, stomach, duodenum, jejunum, ileum, cecum, colon, rectum, liver, pancreas, gallbladder (when present).

(B) Nervous system—brain (multiple sections, including cerebrum, cerebellum and medulla/pons), pituitary, peripheral nerve (sciatic or tibial, preferably in close proximity to the muscle), spinal cord (three levels, cervical, mid-thoracic and lumbar), eyes (retina, optic nerve).

(C) Glandular system—adrenals, parathyroid, thyroid.

(D) Respiratory system—trachea, lungs, pharynx, larynx, nose.

(E) Cardiovascular/Hematopoietic system—aorta, heart, bone marrow (and/or fresh aspirate), lymph nodes (preferably one lymph node covering the route of administration and another one distant from the route of administration to cover systemic effects), spleen, thymus.

(F) Urogenital system—kidneys, urinary bladder, prostate, testes, epididymides, seminal vesicle(s), uterus, ovaries, female mammary gland.

(G) Other—all gross lesions and masses, skin (both treated and adjacent untreated areas).

(13) *Histopathology.* (i) The following histopathology must be performed:

(A) Full histopathology on the organs and tissues, listed in paragraph (e)(12)(iii) of this section, of all animals in the control and high dose groups and all animals that died or were sacrificed during the study.

(B) All gross lesions in all animals.

(C) Target organs in all animals.

(D) When a satellite group is used, histopathology must be performed on tissues and organs identified as showing toxic effects in the treated groups.

(ii) If excessive early deaths or other problems occur in the high dose group compromising the significance of the data, the next dose level must be examined for complete histopathology.

(iii) An attempt should be made to correlate gross observations with microscopic findings.

(iv) Tissues and organs designated for microscopic examination should be fixed in 10% buffered formalin or a recognized suitable fixative as soon as necropsy is performed and no less than 48 hours prior to trimming.

(f) *Data and reporting*—(1) *Treatment of results.* (i) Data must be summarized in tabular form, showing for each test group, number of animals at the start of the test, the number of animals showing lesions, the types of lesions and the percentage of animals displaying each type of lesion.

(ii) When applicable, all observed results, qualitative and quantitative, should be evaluated by an appropriate and generally acceptable statistical method. Any generally accepted statistical method should be used; the statistical methods including significance criteria should be selected during the design of the study.

(2) *Evaluation of study results.* The findings of a subchronic dermal toxicity study should be evaluated in conjunction with the findings of preceding studies and considered in terms of toxic effects and the necropsy and histopathological findings. The evaluation should include the relationship between the dose of the test substance, the incidence and severity of abnormalities including behavioral and clinical abnormalities, gross lesions, identified target organs, body weight changes, effect on mortality, and any other general or specific toxic effects. A properly conducted 90-day subchronic dermal study should provide information on the effects of repeated application of a substance and a satisfactory estimation of a NOEL. It also can indicate the need for an additional longer-term study and provide information on the selection of dose levels.

(3) *Test report.* In addition to reporting requirements specified under EPA Good Laboratory Practice Standards at 40 CFR part 792, subpart J, the following specific information must be reported:

(i) Test substance characterization should include:

(A) Chemical identification.

(B) Lot or batch numbers.

(C) Physical properties.

(D) Purity/impurities.

(ii) Identification and composition of any vehicle if used.

(iii) Test system should contain data on:

(A) Species and strain of animals used and rationale for selection if other than that recommended.

(B) Age including body weight data and sex.

(C) Test environment including cage conditions, ambient temperature, humidity, and light/dark periods.

(D) Identification of animal diet.

(E) Acclimation period.

(iv) Test procedure should include the following data:

(A) Method of randomization used.

(B) Full description of experimental design and procedure.

(C) Dose regime including levels, method, and volume.

(v) Test results should include:

(A) Group animal data. Tabulation of toxic response data by species, strain, sex and exposure level for:

(*1*) Number of animals exposed.

(*2*) Number of animals showing signs of toxicity.

(*3*) Number of animals dying.

(B) Individual animal data. Data should be presented as summary (group mean) as well as for individual animals.

(*1*) Date of death during the study or whether animals survived to termination.

(*2*) Date of observation of each abnormal sign and its subsequent course.

(*3*) Body weight data.

(*4*) Feed consumption data, when collected.

(*5*) Results of ophthalmological examination.

(*6*) Results of hematological tests performed.

(*7*) Results of clinical chemistry tests performed.

(*8*) Results of urinalysis, when performed.

(*9*) Results of observations made.

(*10*) Necropsy findings, including absolute and relative (to body weight) organ weight data.

(*11*) Detailed description of all histopathological findings.

(*12*) Statistical treatment of results, where appropriate.

(g) *Quality control.* A system must be developed and maintained to assure and document adequate performance of laboratory equipment. The study must be conducted in compliance with the Good Laboratory Practice (GLP) regulations.

(h) *References.* For additional background information on this test guideline, the following references should be consulted. These references are available for inspection at the TSCA Nonconfidential Information Center, Rm. NE–B607, Environmental Protection Agency, 401 M St., NW., Washington, DC, 12 noon to 4 p.m., Monday through Friday, except legal holidays.

(1) Organization for Economic Cooperation and Development. Guidelines for Testing of Chemicals, Section 4-Health Effects, Part 411 Subchronic Toxicity Studies, Paris, 1981.

(2) Weingand K, Brown G, Hall R et al. (1996). Harmonization of Animal Clinical Pathology Testing in Toxicity and Safety Studies. *Fundam. & Appl. Toxicol.* 29:198-201.

**§ 799.9355 TSCA reproduction/developmental toxicity screening test.**

(a) *Scope*—(1) *Applicability.* This section is intended to meet testing requirements of the Toxic Substances Control Act (TSCA) (15 U.S.C. 2601).

(2) *Source.* The source material used in developing this TSCA test guideline is the Office of Prevention, Pesticides, and Toxic Substances (OPPTS) harmonized test guideline 870.3550 (July 2000, final guidelines). This source is available at the address in paragraph (h) of this section.

(b) *Purpose.* (1) This guideline is designed to generate limited information concerning the effects of a test substance on male and female reproductive performance such as gonadal function, mating behavior, conception, development of the conceptus, and parturition. It is not an alternative to, nor does it replace, the existing comprehensive test standards in §§ 799.9370 and 799.9380.

(2) This screening test guideline can be used to provide initial information on possible effects on reproduction and/or development, either at an early stage of assessing the toxicological properties of chemicals, or on chemicals of high concern. It can also be used as part of a set of initial screening tests for existing chemicals for which little or no toxicological information is available, as a dose range finding study for more extensive reproduction/developmental studies, or when otherwise considered relevant.

(3) This test does not provide complete information on all aspects of reproduction and development. In particular, it offers only limited means of detecting postnatal manifestations of prenatal exposure, or effects that may be induced during postnatal exposure. Due (amongst other reasons) to the relatively small numbers of animals in the dose groups, the selectivity of the end points,

and the short duration of the study, this method will not provide evidence for definite claims of no effects.

(c) *Definitions*. The definitions in section 3 of TSCA and in 40 CFR Part 792—Good Laboratory Practice Standards apply to this section. The following definitions also apply to this section.

*Dosage* is a general term comprising of dose, its frequency and the duration of dosing.

*Dose* is the amount of test substance administered. Dose is expressed as weight (g, mg) as weight of test substance per unit weight of test animal (e.g., mg/kg), or as constant dietary concentration parts per million (ppm).

*No-observed-effects level (NOEL)* is the maximum dose used in a study which produces no adverse effects. The NOEL is expressed in terms of the weight of a test substance given daily per unit weight of test animal (milligrams per kilograms per day).

(d) *Principle of the test*. (1) The test substance is administered in graduated doses to several groups of males and females. Males should be dosed for a minimum of four weeks and up to and including the day before scheduled sacrifice (this includes a minimum of two weeks prior to mating, during the mating period and, approximately, two weeks post-mating). In view of the limited pre-mating dosing period in males, fertility may not be a particular sensitive indicator of testicular toxicity. Therefore, a detailed histological examination of the testes is essential. The combination of a pre-mating dosing period of two weeks and subsequent mating/fertility observations with an overall dosing period of at least four weeks, followed by detailed histopathology of the male gonads, is considered sufficient to enable detection of the majority of effects on male fertility and spermatogenesis.

(2) Females should be dosed throughout the study. This includes two weeks prior to mating (with the objective of covering at least two complete oestrous cycles), the variable time to conception, the duration of pregnancy and at least four days after delivery, up to and including the day before scheduled sacrifice.

(3) Duration of study, following acclimatization, is dependent on the female performance and is approximately 54 days, (at least 14 days premating, (up to) 14 days mating, 22 days gestation, 4 days lactation).

(4) During the period of administration, the animals are observed closely each day for signs of toxicity. Animals which die or are sacrificed during the test period are necropsied and, at the conclusion of the test, surviving animals are sacrificed and necropsied.

(e) *Description of the method*—(1) *Selection of animal species*. This test standard is designed for use with the rat. If other species are used, appropriate modifications will be necessary. Strains with low fecundity or well-known high incidence of developmental defects should not be used. Healthy virgin animals, not subjected to previous experimental procedures, should be used. The test animals should be characterized as to species, strain, sex, weight and/or age. At the commencement of the study the weight variation of animals used should be minimal and not exceed 20% of the mean weight of each sex.

(2) *Housing and feeding conditions*. (i) The temperature in the experimental animal room should be 22 °C (± 3°). Although the relative humidity should be at least 30% and preferably not exceed 70% other than during room cleaning, the aim should be 50–60%. Lighting should be artificial, the sequence being 12 hours light, 12 hours dark. For feeding, conventional laboratory diets may be used with an unlimited supply of drinking water. The choice of diet may be influenced by the need to ensure a suitable admixture of a test substance when administered by this method.

(ii) Animals may be housed individually or be caged in small groups of the same sex; for group caging, no more than five animals should be housed per cage. Mating procedures should be carried out in cages suitable for the purpose. Pregnant females should be caged individually and provided with nesting materials.

(3) *Preparation of the animals*. Healthy young adult animals must be randomly assigned to the control and treatment groups. Cages should be arranged in such a way that possible effects due to cage placement are minimized. The animals must be uniquely identified and kept in their cages for at least five days prior to the start of the study to allow for acclimatization to the laboratory conditions.

(4) *Preparation of doses*. (i) It is recommended that the test substance be administered orally unless other routes of administration are considered more appropriate. When the oral route is selected, the test compound is usually administered by gavage; however, alternatively, test compounds may be administered via the diet or drinking water.

(ii) Where necessary, the test substance is dissolved or suspended in a suitable vehicle. It is recommended that, wherever possible, the use of an aqueous solution/suspension be considered first, followed by consideration of a solution/emulsion in oil (e.g., corn oil) and then by possible solution in other vehicles. For vehicles other than water the toxic characteristics of the vehicle must be known. The stability of the test substance in the vehicle should be determined.

(f) *Procedure*—(1) *Number and sex of animals*. It is recommended that each group be started with at least 10 animals of each sex. Except in the case of marked toxic effects, it is expected that this will provide at least 8 pregnant females per group which normally is the minimum acceptable number of pregnant females per group. The objective is to produce enough pregnancies and offspring to assure a meaningful evaluation of the potential of the substance to affect fertility, pregnancy, maternal and suckling behaviour, and growth and development of the $F_1$ offspring from conception to day 4 post-partum.

(2) *Dosage*. (i) Generally, at least three test groups and a control group should be used. Dose levels may be based on information from acute toxicity tests or on results from repeated dose studies. Except for treatment with the test substance, animals in the control group should be handled in an identical manner to the test group subjects. If a vehicle is used in administering the test substance, the control group should receive the vehicle in the highest volume used.

(ii) Dose levels should be selected taking into account any existing toxicity and (toxico-) kinetic data available for the test compound or related materials. The highest dose level should be chosen with the aim of inducing toxic effects but not death or severe suffering. Thereafter, a descending sequence of dose levels should be selected in order to demonstrate any dose response relationships and no adverse effects at the lowest dose level. Two to four fold intervals are frequently optimal for setting the descending dose levels and addition of a fourth test group is often preferable to using very large intervals (e.g., more than a factor of 10) between dosages.

(3) *Limit test*. If an oral study at one dose level of at least 1000 mg/kg body weight/day or, for dietary or drinking water administration, an equivalent percentage in the diet, or drinking water using the procedures described for this study, produces no observable toxic effects and if toxicity would not be expected based upon data from

structurally related compounds, then a full study using several dose levels may not be considered necessary. The limit test applies except when human exposure indicates the need for a higher oral dose level to be used. For other types of administration, such as inhalation or dermal application, the physical chemical properties of the test substance often may dictate the maximum attainable concentration.

(4) *Administration of doses.* (i) The animals must be dosed with the test substance daily for seven days a week. When the test substance is administered by gavage, this should be done in a single dose to the animals using a stomach tube or a suitable intubation cannula. The maximum volume of liquid that can be administered at one time depends on the size of the test animal. The volume should not exceed 1 ml/100 g body weight, except in the case of aqueous solutions where 2 ml/100 g body weight may be used. Except for irritating substances which will normally reveal exacerbated effects with higher concentrations, variability in test volume should be minimized by adjusting the concentration to ensure a constant volume at all dose levels.

(ii) For substances administered via the diet or drinking water, it is important to ensure that the quantities of the test substance involved do not interfere with normal nutrition or water balance. When the test substance is administered in the diet either a constant dietary concentration (parts per million (ppm)) or a constant dose level in terms of the animals' body weight may be used; the alternative used must be specified. For a substance administered by gavage, the dose should be given at similar times each day, and adjusted at least weekly to maintain a constant dose level in terms of animal body weight.

(5) *Experimental schedule.* (i) Dosing of both sexes should begin at least 2 weeks prior to mating, after they have been acclimatized for at least five days. The study should be scheduled in such a way that mating begins soon after the animals have attained full sexual maturity. This may vary slightly for different strains of rats in different laboratories, e.g., Sprague Dawley rats 10 weeks of age, Wistar rats about 12 weeks of age. Dams with offspring should be sacrificed on day 4 post-partum, or shortly thereafter. The day of birth (viz. when parturition is complete) is defined as day 0 post-partum. Females showing no-evidence of copulation are sacrificed 24–26 days after the last day of the mating period. Dosing is continued in both sexes during the mating period. Males should further be dosed after the mating period at least until the minimum total dosing period of 28 days has been completed. They are then sacrificed, or, alternatively, are retained and continued to be dosed for the possible conduction of a second mating if considered appropriate.

(ii) Daily dosing of the parental females should continue throughout pregnancy and at least up to, and including, day 3 post-partum or the day before sacrifice. For studies where the test substance is administered by inhalation or by the dermal route, dosing should be continued at least up to, and including, day 19 of gestation.

(iii) The experimental schedule is given in the following figure 1.

**FIGURE 1**

**DIAGRAM OF THE EXPERIMENTAL SCHEDULE INDICATING THE MAXIMUM STUDY DURATION, BASED ON A FULL 14-DAY MATING PERIOD**

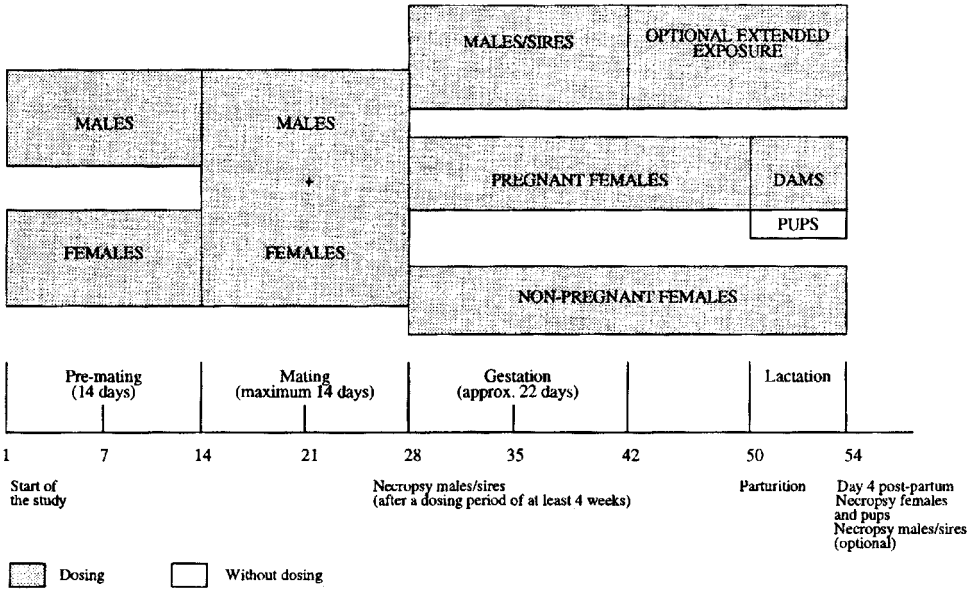


(6) *Mating procedure.* Normally, 1:1 (one male to one female) matings should be used in this study. Exceptions can arise in the case of occasional deaths of males. The female should be placed with the same male until pregnancy occurs or two weeks have elapsed. Each morning the females should be examined for the presence of sperm or a vaginal plug. Day 0 of pregnancy is defined as the day a vaginal plug or sperm is found.

(7) *Observations.* (i) Throughout the test period, general clinical observations should be made at least once a day, and more frequently when signs of toxicity are observed. They should be made preferably at the same time(s) each day, considering the peak period of anticipated effects after dosing. Pertinent behavioural changes, signs of difficult or prolonged parturition and all signs of toxicity, including mortality, should be recorded. These records should include time of onset, degree and duration of toxicity signs.

(ii) The duration of gestation should be recorded and is calculated from day 0 of pregnancy. Each litter should be examined as soon as possible after delivery to establish the number and sex of pups, stillbirths, live births, runts (pups that are significantly smaller than corresponding control pups) and the presence of gross abnormalities.

(iii) Live pups should be counted and sexed and litters weighed within 24 hours of parturition (day 1) and on day 4 post-partum. In addition to the observations on parent animals, described by paragraph (f)(7) of this section, any abnormal behaviour of the offspring should be recorded.

(8) *Body weight and food/water consumption*. (i) Males and females should be individually weighed on the first day of dosing, at least weekly thereafter, and at termination. During pregnancy, females should be weighed on days 0, 7, 14 and 20 and within 24 hours of parturition (day 1) and day 4 post-partum.

(ii) During pre-mating, pregnancy and lactation, food consumption should be measured at least weekly. The measurement of food consumption during mating is optional. Water consumption during these periods should also be measured when the test substance is administered via drinking water.

(9) *Pathology*—(i) *Gross necropsy*. (A) At the time of sacrifice or death during the study, the adult animals should be examined macroscopically for any abnormalities or pathological changes. Special attention should be paid to the organs of the reproductive system. The number of implantation sites should be recorded. Corpora lutea should be counted.

(B) The testes and epididymides of all male adult animals should be weighed.

(C) Dead pups and pups sacrificed at day 4 post-partum, or shortly thereafter, should, at least, be carefully examined externally for gross abnormalities.

(D) The ovaries, testes, epididymides, accessory sex organs and all organs showing macroscopic lesions of all adult animals should be preserved. Formalin fixation is not recommended for routine examination of testes and epididymides. An acceptable method is the use of Bouin's fixative for these tissues.

(ii) *Histopathology*. (A) Detailed histological examination should be performed on the ovaries, testes and epididymides of the animals of the highest dose group and the control group. The other preserved organs may be examined when necessary. Examinations should be extended to the animals of other dosage groups when changes are seen in the highest dose group.

(B) Detailed testicular histopathological examination (e.g., using Bouin's fixative, paraffin embedding and transverse sections of 4-5 ±m thickness) should be conducted with special emphasis on stages of spermatogenesis and histopathology interstitial testicular cell structure. The evaluation should identify treatment-related effects such as retained spermatids, missing germ cell layers or types, multinucleated giant cells or sloughing of spermatogenic cells into the lumen (the specifications for the evaluation are discussed in paragraph (g)(2) of this section). Examination of the intact epididymis should include the caput, corpus, and cauda, which can be accomplished by evaluation of a longitudinal section. The epididymis should be evaluated for leukocyte infiltration, change in prevalence of cell types, aberrant cell types, and phagocytosis of sperm. PAS and hematoxylin staining may be used for examination of the male reproductive organs. Histopathological examination of the ovary should detect qualitative depletion of the primordial follicle population.

(g) *Data and reporting*—(1) *Data*. Individual animal data should be provided. Additionally, all data should be summarised in tabular form, showing for each test group the number of animals at the start of the test, the number of animals found dead during the test or sacrificed for humane reasons, the time of any death or humane sacrifice, the number of fertile animals, the number of pregnant females, the number of animals showing signs of toxicity, a description of the signs of toxicity observed, including time of onset, duration, and severity of any toxic effects, the types of histopathological changes, and all relevant litter data.

(2) *Evaluation of results*. (i) The findings of this toxicity study should be evaluated in terms of the observed effects, necropsy and microscopic findings. This evaluation must include the relationship between the dose of the test substance and the presence or absence, incidence and severity of abnormalities, including gross lesions, identified target organs, infertility, clinical abnormalities, affected reproductive and litter performance, body weight changes, effects on mortality and any other toxic effects.

(ii) Because of the short period of treatment of the male, the histopathology of the testis and epididymus must be considered along with the fertility data, when assessing male reproductive effects.

(iii) Due to the limited dimensions of the study, statistical analysis in the form of tests for ''significance'' are of limited value for many endpoints, especially reproductive endpoints. If statistical analyses are used then the method chosen should be appropriate for the distribution of the variable examined, and be selected prior to the start of the study. Because of the small group size, the use of historic control data (e.g., for litter size), where available, may also be useful as an aid to the interpretation of the study.

(3) *Test report*. The test report must include the following information:

(i) Test substance:

(A) Physical nature and, where relevant, physicochemical properties.

(B) Identification data.

(ii) Vehicle (if appropriate): Justification for choice of vehicle if other than water.

(iii) Test animals:

(A) Species/strain used.

(B) Number, age and sex of animals.

(C) Source, housing conditions, diet, etc.

(D) Individual weights of animals at the start of the test.

(iv) Test conditions:

(A) Rationale for dose level selection.

(B) Details of test substance formulation/diet preparation, achieved concentrations, stability and homogeneity of the preparation.

(C) Details of the administration of the test substance.

(D) Conversion from diet/drinking water test substance concentration (parts per million (ppm)) to the actual dose (mg/kg body weight/day), if applicable.

(E) Details of food and water quality.

(v) Results (toxic response data by sex and dose):

(A) Time of death during the study or whether animals survived to termination.

(B) Nature, severity and duration of clinical observations (whether reversible or not).

(C) Body weight/body weight change data.

(D) Food consumption and water consumption, if applicable.

(E) Effects on reproduction, including information on mating/precoital interval, fertility, fecundity and gestation duration.

(F) Effects on offspring, including number of pups born (live and dead), sex ratio, postnatal growth (pup weights) and survival (litter size), gross abnormalities and clinical observations during lactation.

(G) Body weight at termination and organ weight data for the parental animals.

(H) Necropsy data, including number of implantations and number of corpora lutea.

(I) Calculations of pre- and postimplantation loss.

(J) Detailed description of histopathological findings.

(K) Statistical treatment of results, where appropriate.

(vi) Discussion of results.

(vii) Conclusions.

(4) *Interpretation of results*. The study will provide evaluations of reproduction/developmental toxicity associated with administration of repeated doses. It could provide an indication of the need to conduct further investigations and provides guidance in the design of subsequent studies.

(h) *References.* For additional background information on this test guideline, the following references should be consulted. These references are available for inspection at the TSCA Nonconfidential Information Center, Rm. NE–B607, Environmental Protection Agency, 401 M St., SW., Washington, DC, 12 noon to 4 p.m., Monday through Friday, except legal holidays.

(1) OECD (1995). Reproduction/Developmental Toxicity Screening Test, OECD 421, OECD Guidelines for Testing of Chemicals.

(2) [Reserved]

**§ 799.9365 TSCA combined repeated dose toxicity study with the reproduction/developmental toxicity screening test.**

(a) *Scope*—(1) *Applicability*. This section is intended to meet testing requirements of the Toxic Substances Control Act (TSCA) (15 U.S.C. 2601).

(2) *Source*. The source material used in developing this TSCA test guideline is the Office of Prevention, Pesticides and Toxic Substances (OPPTS) harmonized test guideline 870.3650 (July 2000, final guidelines). This source is available at the address in paragraph (h) of this section.

(b) *Purpose*. (1) This screening test provides limited information on systemic toxicity, neurotoxicity, and/or immunotoxicity following repeated exposure over a limited time period. In addition, it can be used to provide initial information on possible effects on male and female reproductive performance such as gonadal function, mating behavior, conception, development of the conceptus, and parturition. It is not an alternative to, nor does it replace, the existing test guidelines in §§ 799.9370, 799.9380, 799.9620, and 799.9780 of this part.

(2) This test does not provide complete information on all aspects of reproduction and development. In particular, it offers only limited means of detecting postnatal manifestations of prenatal exposure, or effects that may be induced during postnatal exposure. Due (amongst other reasons) to the selectivity of the end points, and the short duration of the study, this method will not provide evidence for definite claims of no reproduction/developmental effects.

(3) This test can be used to provide initial information either at an early stage of assessing the toxicological properties of chemicals, or chemicals of high concern. It can also be used as part of a set of initial screening tests for existing chemicals for which little or no toxicological information is available or when otherwise considered relevant. It also can serve as an alternative to conducting two separate screening tests for repeated dose toxicity as described in § 799.9305 of this part and reproductive/developmental toxicity as described in § 799.9355 of this part.

(c) *Definitions*. The definitions in section 3 of TSCA and in 40 CFR Part 792—Good Laboratory Practice Standards apply to this section. The following definitions also apply to this section.

*Dosage* is a general term comprising dose, its frequency and the duration of dosing.

*Dose* is the amount of test substance administered. Dose is expressed as weight (g, gm) or as weight of test substance per unit weight of test animal (e.g., mg/kg), or as constant dietary concentration (parts per million (ppm)).

*No-observed-effects level (NOEL)* is the maximum dose used in a study which produces no adverse effects. The NOEL is expressed in terms of the weight of a test substance given daily per unit weight of test animal (milligrams per kilogram per day).

(d) *Principle of the test*. (1) The test substance must be administered in graduated doses to several groups of males and females. Males should be dosed for a minimum of 4 weeks, up to and including the day before scheduled sacrifice (this includes a minimum of 2 weeks prior to mating, during the mating period and, approximately, 2 weeks post mating). In view of the limited pre-mating dosing period in males, fertility may not be a particularly sensitive indicator of testicular toxicity. Therefore, a detailed histological examination of the testes is essential. The combination of a pre-mating dosing period of 2 weeks and subsequent mating/fertility observations with an overall dosing period of at least 4 weeks, followed by detailed histopathology of the male gonads, is considered sufficient to enable detection of the majority of effects on male fertility and spermatogenesis.

(2) Females should be dosed throughout the study. This includes 2 weeks prior to mating (with the objective of covering at least two complete oestrous cycles), the variable time to conception, the duration of pregnancy and at least 4 days after delivery, up to and including the day before scheduled sacrifice.

(3) Duration of study, following acclimatization, is dependent on the female performance and is approximately 54 days, (at least 14 days pre-mating, (up to) 14 days mating, 22 days gestation, 4 days lactation).

(4) During the period of administration, the animals are observed closely each day for signs of toxicity. Animals which die or are sacrificed during the test are necropsied and, at the conclusion of the test, surviving animals are sacrificed and necropsied.

(e) *Description of the method*—(1) *Selection of animal species*. This test guideline is designed for use with the rat. If other species are used, appropriate modifications will be necessary. Strains with low fecundity or well-known high incidence of developmental defects should not be used. Healthy virgin animals, not subjected to previous experimental procedures, should be used. The test animals should be characterised as to species, strain, sex, weight and/or age. At the commencement of the study the weight variation of animals used should be minimal and not exceed ± 20% of the mean weight of each sex. Where the study is conducted as a preliminary study to a long-term or a full-generation study, preferably animals from the same strain and source should be used in both studies.

(2) *Housing and feeding conditions*. (i) The temperature in the experimental animal room should be 22 °C (± 3°). The relative humidity should be at least 30% and preferably not exceed 70% other than during room cleaning. Lighting should be artificial, the sequence being 12 hours light, 12 hours dark. For feeding, conventional laboratory diets may be used with an unlimited supply of drinking water. The choice of diet may be influenced by the need to ensure a suitable admixture of a test substance when administered by this method.

(ii) Animals may be housed individually or be caged in small groups of the same sex; for group caging, no more than five animals should be housed per cage. Mating procedures

should be carried out in cages suitable for the purpose. Pregnant females should be caged individually and provided with nesting materials.

(3) *Preparation of the animals.* Healthy young adult animals must be randomised and assigned to the treatment groups and cages. Cages should be arranged in such a way that possible effects due to cage placements are minimized. The animals must be uniquely identified and kept in their cages for at least 5 days prior to the start of the study to allow for acclimatisation to the laboratory conditions.

(4) *Preparation of doses.* (i) It is recommended that the test substance be administered orally unless other routes of administration are considered more appropriate. When the oral route is selected, the test compound is usually administered by gavage; however, alternatively, test compounds may also be administered via the diet or drinking water.

(ii) Where necessary, the test substance is dissolved or suspended in a suitable vehicle. It is recommended that, wherever possible, the use of an aqueous solution/suspension be considered first, followed by consideration of a solution/emulsion in oil (e.g., corn oil) and then by possible solution in other vehicles. For non-aqueous vehicles the toxic characteristics of the vehicle must be known. The stability of the test substance in the vehicle should be determined.

(f) *Procedure*—(1) *Number and sex of animals.* It is recommended that each group be started with at least 10 animals of each sex. Except in the case of marked toxic effects, it is expected that this will provide at least eight pregnant females per group which normally is the minimum acceptable number of pregnant females per group. The objective is to produce enough pregnancies and offspring to assure a meaningful evaluation of the potential of the substance to affect fertility, pregnancy, maternal and suckling behaviour, and growth and development of the $F_1$ offspring from conception to day 4 post-partum. If interim sacrifices are planned, the number should be increased by the number of animals scheduled to be sacrificed before the completion of the study. Consideration should be given to an additional satellite group of five animals per sex in the control and the top dose group for observation of reversibility, persistence or delayed occurrence of systemic toxic effects, for at least 14 days post treatment. Animals of the satellite groups must not be mated and, consequently, must not used for the assessment of reproduction/developmental toxicity.

(2) *Dosage.* (i) Generally, at least three test groups and a control group should be used. If there are no suitable general toxicity data available, a range finding study may be performed to aid the determination of the doses to be used. Except for treatment with the test substance, animals in the control group should be handled in an identical manner to the test group subjects. If a vehicle is used in administering the test substance, the control group should receive the vehicle in the highest volume used.

(ii) Dose levels should be selected taking into account any existing toxicity and (toxico-) kinetic data available for the test compound or related materials. It should also be taken into account that there may be differences in sensitivity between pregnant and non-pregnant animals. The highest dose level should be chosen with the aim of inducing toxic effects but not death nor obvious suffering. Thereafter, a descending sequence of dose levels should be selected with a view to demonstrating any dosage related response and no adverse effects at the lowest dose level. Two- to four-fold intervals are frequently optimum and addition of a fourth test group is often preferable to using very large intervals (e.g., more than a factor of 10) between dosages.

(3) *Limit test.* If an oral study at 1-dose level of at least 1000 mg/kg body weight/day or, for dietary administration, an equivalent percentage in the diet, or drinking water (based upon body weight determinations), using the procedures described for this study, produces no observable toxic effects and if toxicity would not be expected based upon data from structurally related compounds, then a full study using several dose levels may not be considered necessary. The limit test applies except when human exposure indicates the need for a higher dose level to be used. For other types of administration, such as inhalation or dermal application, the physical chemical properties of the test substance often may dictate the maximum attainable exposure.

(4) *Administration of doses.* (i) The animals are dosed with the test substance daily for 7 days a week. When the test substance is administered by gavage, this should be done in a single dose to the animals using a stomach tube or a suitable intubation cannula. The maximum volume of liquid that can be administered at one time depends on the size of the test animal. The volume should not exceed 1 ml/100 g body weight, except in the case of aqueous solutions where 2 ml/100 g body weight may be used. Except for irritating or corrosive substances which will normally reveal exacerbated effects with higher concentrations, variability in test volume should be minimized by adjusting the concentration to ensure a constant volume at all dose levels.

(ii) For substances administered via the diet or drinking water, it is important to ensure that the quantities of the test substance involved do not interfere with normal nutrition or water balance. When the test substance is administered in the diet either a constant dietary concentration (parts per million (ppm)) or a constant dose level in terms of the animals' body weight may be used; the alternative used must be specified. For a substance administered by gavage, the dose should be given at similar times each day, and adjusted at least weekly to maintain a constant dose level in terms of animal body weight.

(5) *Experimental schedule.* (i) Dosing of both sexes should begin 2 weeks prior to mating, after they have been acclimatized for at least 5 days. The study should be scheduled in such a way that mating begins soon after the animals have attained full sexual maturity. This may vary slightly for different strains of rats in different laboratories, e.g., Sprague Dawley rats 10 weeks of age, Wistar rats about 12 weeks of age. Dams with offspring should be sacrificed on day 4 post-partum, or shortly thereafter. In order to allow for overnight fasting of dams prior to blood collection (if this option is preferred), dams and their offspring need not necessarily be sacrificed on the same day. The day of birth (viz. when parturition is complete) is defined as day 0 post-partum. Females showing no-evidence of copulation are sacrificed 24–26 days after the last day of the mating period. Dosing is continued in both sexes during the mating period. Males should further be dosed after the mating period at least until the minimum total dosing period of 28 days has been completed. They are then sacrificed, or, alternatively, are retained and continued to be dosed for the possible conduction of a second mating if considered appropriate.

(ii) Daily dosing of the parental females should continue throughout pregnancy and at least up to, and including, day 3 post-partum or the day before sacrifice. For studies where the test substance is administered by inhalation or by the dermal route, dosing should be continued at least up to, and including, day 19 of gestation.

(iii) Animals in a satellite group scheduled for follow-up observations, if

included, must not mated. They should be kept at least for a further 14 days after the first scheduled sacrifice of dams, without treatment to detect delayed occurrence, or persistence of, or recovery from toxic effects.

(iv) The experimental schedule is given in the following figure 1.

Figure 1

DIAGRAM OF THE EXPERIMENTAL SCHEDULE, INDICATING THE MAXIMUM STUDY DURATION, BASED ON A FULL 14-DAY MATING PERIOD

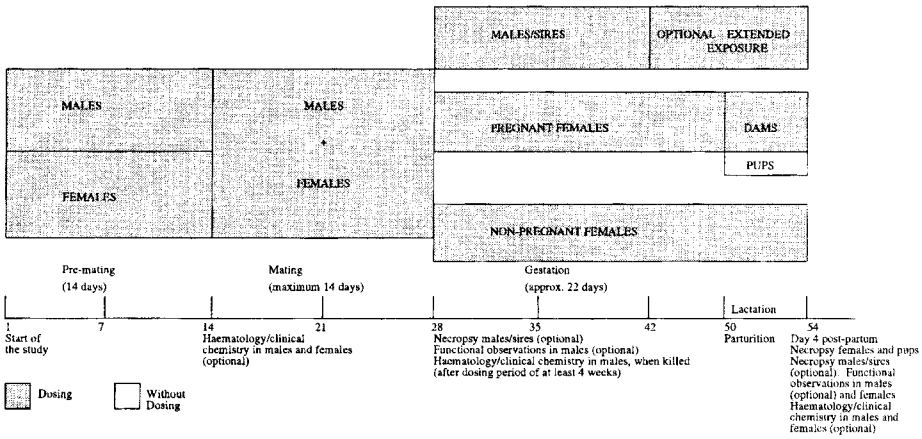


(6) *Mating procedure*. Normally, 1:1 (one male to one female) matings should be used in this study. Exceptions can arise in the case of occasional deaths of males. The female should be placed with the same male until pregnancy occurs or 2 weeks have elapsed. Each morning the females should be examined for the presence of sperm or a vaginal plug. Day 0 of pregnancy is defined as the day a vaginal plug or sperm is found. In case pairing was unsuccessful, re-mating of females with proven males of the same group could be considered.

(7) *Observations*. (i) General clinical observations should be made at least once a day, preferably at the same time(s) each day and considering the peak period of anticipated effects after dosing. The health condition of the animals should be recorded. At least twice daily all animals must be observed for morbidity and mortality.

(ii) Once before the first exposure (to allow for within-subject comparisons), and at least once a week thereafter, detailed clinical observations should be made in all animals. These observations should be made outside the home cage in a standard arena and preferably at the same time, each day. They should be carefully recorded; preferably using scoring systems, explicitly defined by the testing laboratory. Effort should be made to ensure that variations in the test conditions are minimal and that observations are preferably conducted by observers unaware of the treatment. Signs noted should include, but not be limited to, changes in skin, fur, eyes, mucous membranes, occurrence of secretions and excretions and autonomic activity (e.g., lacrimation, piloerection, pupil size, unusual respiratory pattern). Changes in gait, posture and response to handling as well as the presence of clonic or tonic movements, stereotypies (e.g., excessive grooming, repetitive circling), difficult or prolonged parturition or bizarre behaviour (e.g., self-mutilation, walking backwards) should also be recorded.

(iii) At one time during the study, sensory reactivity to stimuli of different modalities (e.g., auditory, visual and proprioceptive stimuli) assessment of grip strength and motor activity assessment should be conducted in five males and five females, randomly selected from each group. Further details of the procedures that could be followed are given in the respective references. However, alternative procedures than those referenced could also be used. In males, these functional observations should be made towards the end of their dosing period, shortly before scheduled sacrifice but before blood sampling for hematology or clinical chemistry. Females should be in a physiologically similar state during these functional tests and should preferably be tested during lactation, shortly before scheduled sacrifice. In order to avoid hypothermia of pups, dams should be removed from the pups for not more than 30 to 40 minutes. Examples of procedures for observation are described in the references in paragraphs (h)(3), (h)(4), (h)(5), (h)(6), and (h)(7) of this section.

(iv) Functional observations made once towards the end of the study may be omitted when the study is conducted as a preliminary study to a subsequent subchronic (90-day) or long-term study. In that case, the functional observations should be included in this follow-up study. On the other hand, the availability of data on functional observations from this repeated dose study may enhance the ability to select dose levels for a subsequent subchronic or long-term study.

(v) Functional observations may also be omitted for groups that otherwise reveal signs of toxicity to an extent that would significantly interfere with the functional test performance.

(vi) The duration of gestation should be recorded and is calculated from day 0 of pregnancy. Each litter should be examined as soon as possible after delivery to establish the number and sex of pups, stillbirths, live births, runts (pups that are significantly smaller than corresponding control pups), and the presence of gross abnormalities.

(vii) Live pups should be counted and sexed and litters weighed within 24 hours of parturition (day 0 or 1 post-partum) and on day 4 post-partum. In addition to the observations on parental animals, described by paragraphs (f)(7)(ii) and (f)(7)(iii) of this section, any abnormal behaviour of the offspring should be recorded.

(8) *Body weight and food/water consumption*. (i) Males and females should be weighed on the first day of dosing, at least weekly thereafter, and at termination. During pregnancy, females should be weighed on days 0, 7, 14 and 20 and within 24 hours of parturition (day 0 or 1 post-partum), and day 4 post-partum. These observations should be reported individually for each adult animal.

(ii) During pre-mating, pregnancy and lactation, food consumption should be measured at least weekly. The measurement of food consumption during mating is optional. Water consumption during these periods should also be measured, when the test substance is administered by that medium.

(9) *Hematology*. (i) Once during the study, the following hematological examinations should be made in five males and five females randomly selected from each group: hematocrit, hemoglobin concentration, erythrocyte count, total and differential leucocyte count, platelet count and a measure of blood clotting time/potential.

(ii) Blood samples should be taken from a named site. Females should be in a physiologically similar state during sampling. In order to avoid practical difficulties related to the variability in the onset of gestation, blood collection in females may be done at the end of the pre-mating period as an alternative to sampling just prior to, or as part of, the procedure for sacrificing the animals. Blood samples of males should preferably be taken just prior to, or as part of, the procedure for sacrificing the animals. Alternatively, blood collection in males may also be done at the end of the pre-mating period when this time point was preferred for females.

(iii) Blood samples should be stored under appropriate conditions.

(10) *Clinical biochemistry*. (i) Clinical biochemistry determinations to investigate major toxic effects in tissues and, specifically, effects on kidney and liver, should be performed on blood samples obtained from the selected five males and five females of each group. Overnight fasting of the animals prior to blood sampling is recommended[1]. Investigations of plasma or serum must include sodium, potassium, glucose, total cholesterol, urea, creatinine, total protein and albumin, at least two enzymes indicative of hepatocellular effects (such as alanine aminotransferase, aspartate aminotransferase and sorbitol dehydrogenase) and bile acids. Measurements of additional enzymes (of hepatic or other origin) may provide useful information under certain circumstances.

(ii) Optionally, the following urinalysis determinations could be performed in five randomly selected males of each group during the last week of the study using timed urine volume collection; appearance, volume, osmolality or specific gravity, pH, protein, glucose and blood or blood cells.

(iii) In addition, studies to investigate serum markers of general tissue damage should be considered. Other determinations that should be carried out if the known properties of the test substance may, or are suspected to, affect related metabolic profiles include calcium, phosphate, fasting triglycerides and fasting glucose, specific hormones, methemoglobin and cholinesterase. These need to be identified on a case-by-case basis.

(iv) Overall, there is a need for a flexible approach, depending on the observed and/or expected effect with a given compound.

(v) If historical baseline data are inadequate, consideration should be given to determination of hematological and clinical biochemistry variables before dosing commences.

(11) *Pathology*—(i) *Gross necropsy*. (A) All adult animals in the study must be subjected to a full, detailed gross necropsy which includes careful examination of the external surface of the body, all orifices, and the cranial, thoracic and abdominal cavities and their contents. Special attention should be paid to the organs of the reproductive system. The number of implantation sites should be recorded. Corpora lutea should be counted.

(B) The testes and epididymides of all adult males should be weighed and the ovaries, testes, epididymides, accessory sex organs, and all organs showing macroscopic lesions of all adult animals, should be preserved.

(C) In addition, for five adult males and females, randomly selected from each group, the liver, kidneys, adrenals, thymus, spleen, brain and heart should be trimmed of any adherent tissue, as appropriate and their wet weight taken as soon as possible after dissection to avoid drying. Of the selected males and females, the following tissues should also be preserved in the most appropriate fixation medium for both the type of tissue and the intended subsequent histopathological examination: all gross lesions, brain (representative regions including cerebrum, cerebellum and pons), spinal cord, stomach, small and large intestines (including Peyer's patches), liver, kidneys, adrenals, spleen, heart, thymus, thyroid, trachea and lungs (preserved by inflation with fixative and then immersion), uterus, urinary bladder, lymph nodes (preferably 1 lymph node covering the route of administration and another one distant from the route of administration to cover systemic effects), peripheral nerve (sciatic or tibial) preferably in close proximity to the muscle, and a section of bone marrow (or, alternatively, a fresh mounted marrow aspirate).

(D) Formalin fixation is not recommended for routine examination of testes and epididymides. An acceptable method is the use of Bouin's fixative for these tissues. The clinical and other findings may suggest the need to examine additional tissues. Also, any organs considered likely to be target organs based on the known properties of the test substance should be preserved.

(E) Dead pups and pups sacrificed at day 4 post-partum, or shortly thereafter, should, at least, be carefully examined externally for gross abnormalities.

(ii) *Histopathology*. (A) Full histopathology should be conducted on the preserved organs and tissues of the selected animals in the control and high dose groups and all gross lesions. These examinations should be extended to animals of other dosage groups if treatment-related changes are observed in the high dose group.

(B) Detailed testicular histopathological examination (e.g., using Bouin's fixative, paraffin embedding and transverse sections of 4–5 ±m thickness) should be conducted with special emphasis on stages of spermatogenesis and histopathology interstitial testicular cell structure. The evaluation should identify treatment-related effects such as retained spermatids, missing germ cell layers or types, multinucleated giant cells or sloughing of spermatogenic cells into the lumen (the specifications for the evaluation are discussed in paragraph (g)(2) of this section). Examination of the intact epididymis should include the caput, corpus, and cauda, which can be accomplished by evaluation of a longitudinal section. The epididymis should be evaluated for leukocyte infiltration, change in prevalence of cell types, aberrant cell types, and phagocytosis of sperm. Periodic acid-Schiff (PAS) and hematoxylin staining may be used for examination of the male reproductive organs. Histopathological examination of the ovary should detect qualitative depletion of the primordial follicle population.

(C) When a satellite group is used, histopathology should be performed on

[1] For a number of measurements in serum and plasma, most notably for glucose, overnight fasting would be preferable. The major reason for this preference is that the increased variability which would inevitably result from non-fasting, would tend to mask more subtle effects and make interpretation difficult. On the other hand, however, overnight fasting may interfere with the general metabolism of the (pregnant) animals, disturbs lactation and nursing behaviour, and, particularly in feeding studies, may disturb the daily exposure to the test substance. If overnight fasting is adopted, clinical biochemical determinations should be performed after the conduct of functional observations in week 4 of the study.

tissues and organs identified as showing effects in the treated groups.

(g) *Data and reporting*—(1)*Data.* Individual animal data should be provided. Additionally, all data should be summarised in tabular form, showing for each test group the number of animals at the start of the test, the number of animals found dead during the test or sacrificed for humane reasons, the time of any death or humane sacrifice, the number of fertile animals, the number of pregnant females, the number of animals showing signs of toxicity, a description of the signs of toxicity observed, including time of onset, duration, and severity of any toxic effects, the types of histopathological changes, and all relevant litter data.

(2)*Evaluation of results.* (i) The findings of this toxicity study should be evaluated in terms of the observed effects, necropsy and microscopic findings. The evaluation will include the relationship between the dose of the test substance and the presence or absence, incidence and severity of abnormalities, including gross lesions, identified target organs, infertility, clinical abnormalities, affected reproductive and litter performance, body weight changes, effects on mortality and any other toxic effects.

(ii) Because of the short period of treatment of the male, the histopathology of the testes and epididymides must be considered along with the fertility data, when assessing male reproduction effects. The use of historic control data on reproduction/ development (e.g. for litter size) where available may also be useful as an aid to the interpretation of the study.

(iii) When possible, numerical results should be evaluated by an appropriate and general acceptable statistical method. The statistical methods should be selected during the design of the study. Due to the limited dimensions of the study, statistical analysis in the form of tests for ''significance'' are of limited value for many endpoints, especially reproductive endpoints. Some of the most widely used methods, especially parametric tests for measures of central tendency, are inappropriate. If statistical analyses are used then the method chosen should be appropriate for the distribution of the variable examined and be selected prior to the start of the study.

(3) *Test report.* The test report must include the following information:

(i) Test substance:

(A) Physical nature and, where relevant, physicochemical properties.

(B) Identification data.

(ii) Vehicle (if appropriate): Justification for choice of vehicle, if other than water.

(iii) Test animals:

(A) Species/strain used.

(B) Number, age and sex of animals.

(C) Source, housing conditions, diet, etc.

(D) Individual weights of animals at the start of the test.

(iv) Test conditions:

(A) Rationale for dose level selection.

(B) Details of test substance formulation/diet preparation, achieved concentration, stability and homogeneity of the preparation.

(C) Details of the administration of the test substance.

(D) Conversion from diet/drinking water test substance concentration (parts per mission (ppm)) to the actual dose (mg/kg body weight/day), if applicable.

(E) Details of food and water quality.

(v) Results (toxic response data by sex and dose):

(A) Time of death during the study or whether animals survived to termination.

(B) Nature, severity and duration of clinical observations (whether reversible or not).

(C) Body weight/body weight change data.

(D) Food consumption and water consumption, if applicable.

(E) Sensory activity, grip strength and motor activity assessments.

(F) Hematological tests with relevant baseline values,

(G) Clinical biochemistry tests with relevant baseline values.

(H) Effects on reproduction, including information on mating/precoital interval, fertility, fecundity and gestation duration.

(I) Effects on offspring, including number of pups born (live and dead), sex ratio, postnatal growth (pup weights) and survival (litter size), gross abnormalities and clinical observations during lactation.

(J) Body weight at termination and organ weight data for the parental animals.

(K) Necropsy data, including number of implantations and number of corpora lutea.

(L) Calculations of pre- and postimplantation loss.

(M) Detailed description of histopathological findings.

(N) Statistical treatment of results, where appropriate.

(vi) Discussion of results.

(vii) Conclusions.

(h) *References.* For additional background information on this test guideline, the following references should be consulted. These references are available for inspection at the TSCA Nonconfidential Information Center, Rm. NE–B607, Environmental Protection Agency, 401 M St., NW., Washington, DC, 12 noon to 4 p.m., Monday through Friday, except legal holidays.

(1) Mitsumori, K., Kodama, Y., Uchida, O., Takada, K., Saito, M. Naito, K., Tanaka, S., Kurokawa, Y., Usami, M., Kawashima, K., Yasuhara, K., Toyoda, K., Onodera, H., Furukawa, F., Takahashi, M. and Hayashi, Y., (1994). Confirmation Study, Using Nitro-Benzene, of the Combined Repeat Dose and Reproductive/ Developmental Toxicity Test Protocol Proposed by the Organization for Economic Cooperation and Development (OECD). *Journal of Toxicology and Science*, 19:141–149.

(2) Tanaka, S., Kawashima, K., Naito, K., Usami, M., Nakadate, M., Imaida, K., Takahashi, M., Hayashi, Y., Kurokawa, Y. and Tobe, M. (1992). Combined Repeat Dose and Reproductive/Developmental Toxicity Screening Test (OECD): Familiarization Using Cyclophosphamide. *Fundamental and Applied Toxicology*, 18:89–95.

(3) Tupper D.E., Wallace R.B. (1980). Utility of the Neurologic Examination in Rats. *Acta Neurobiological Exposure*, 40:999–1003.

(4) Gad S.C. (1982). A Neuromuscular Screen for Use in Industrial Toxicology. *Journal of Toxicology and Environmental Health*, 9:691–704.

(5) Moser V.C., McDaniel K.M., Phillips P.M. (1991). Rat Strain and Stock Comparisons Using a Functional Observational Battery: Baseline Values and Effects of Amitraz. *Toxicology and Applied Pharmacology*, 108:267–283.

(6) Meyer O.A., Tilson H.A., Byrd W.C., Riley M.T. (1979). A Method for the Routine Assessment of Fore- and Hindlimb Grip Strength of Rats and Mice. *Neurobehavorial Toxicology*, 1:233–236.

(7) Crofton K.M., Howard J.L., Moser V.C., Gill M.W., Reiter L.W., Tilson H.A., MacPhail R.C. (1991). Interlaboratory Comparison of Motor Activity Experiments: Implication for Neurotoxicological Assessments. *Neurotoxicology and Teratology* 13:599–609.

### § 799.9410 TSCA chronic toxicity.

(a) *Scope*—(1) *Applicability.* This section is intended to meet the testing requirement of the Toxic Substances Control Act (TSCA) (15 U.S.C. 2601).

(2) *Source.* The source material used in developing this TSCA test guideline is the Office of Prevention, Pesticides and Toxic Substances (OPPTS) harmonized test guideline 870.4100

(August 1998, final guidelines). This source is available at the address in paragraph (h) of this section

(b) *Purpose.* The objective of a chronic toxicity study is to determine the effects of a substance in a mammalian species following prolonged and repeated exposure. A chronic toxicity study should generate data from which to identify the majority of chronic effects and to define long-term dose-response relationships. The design and conduct of chronic toxicity tests should allow for the detection of general toxic effects, including neurological, physiological, biochemical, and hematological effects and exposure-related morphological (pathological) effects.

(c) *Definitions.* The definitions in section 3 of TSCA and in 40 CFR Part 792—Good Laboratory Practice Standards apply to this section. The following definitions also apply to this section.

*Chronic toxicity* is the adverse effects occurring as a result of the repeated daily exposure of experimental animals to a chemical by the oral, dermal, or inhalation routes of exposure.

*Cumulative toxicity* is the adverse effects of repeated doses occurring as a result of prolonged action on, or increased concentration of, the administered test substance or its metabolites in susceptible tissue.

*Dose in a chronic toxicity study* is the amount of test substance administered daily via the oral, dermal or inhalation routes for a period of at least 12 months. Dose is expressed as weight of the test substance (grams, milligrams) per unit body weight of test animal (milligram per kilogram), or as weight of the test substance in parts per million (ppm) in food or drinking water per day. For inhalation exposure, dose is expressed as weight of the test substance per unit volume of air (milligrams per liter) or as parts per million per day. For dermal exposure, dose is expressed as weight of the test substance (grams, milligrams) per unit body weight of the test animal (milligrams per kilogram) or as weight of the substance per unit of surface area (milligrams per square centimeter) per day.

*No-observed-effects level* (NOEL) is the maximum dose used in a study which produces no adverse effects. The NOEL is usually expressed in terms of the weight of a test substance given daily per unit weight of test animal (milligrams per kilogram per day).

*Target organ* is any organ of a test animal showing evidence of an effect induced by a test substance.

(d) *Limit test.* If a test at one dose level of at least 1,000 mg/kg body weight (expected human exposure may indicate the need for a higher dose level), using the procedures described for this study, produces no observable toxic effects and if toxicity would not be expected based upon data of structurally related compounds, a full study using three dose levels might not be necessary.

(e) *Test procedures*—(1) *Animal selection*—(i) *Species and strain.* Testing should be performed with two mammalian species, one a rodent and the other a nonrodent. The rat is the preferred rodent species. Commonly used laboratory strains must be employed.

(ii) *Age/weight.* (A) Testing must be started with young healthy animals as soon as possible after weaning and acclimatization.

(B) Dosing of rodents should generally begin no later than 8 weeks of age.

(C) Dosing of non-rodents should begin between 4 and 6 months of age and in no case later than 9 months of age.

(D) At commencement of the study, the weight variation of animals used should be within 20% of the mean weight for each sex.

(E) Studies using prenatal or neonatal animals may be recommended under special conditions.

(iii) *Sex.* (A) Equal numbers of animals of each sex should be used at each dose level.

(B) Females should be nulliparous and nonpregnant.

(iv) *Numbers.* (A) For rodents, at least 40 animals (20 males and 20 females) and for nonrodents at least 8 animals (4 females and 4 males) should be used at each dose level and concurrent control group.

(B) If interim sacrifices are planned, the number should be increased by the number of animals scheduled to be sacrificed during the course of the study.

(C) The number of animals at the termination of the study must be adequate for a meaningful and valid statistical evaluation of chronic effects. The Agency must be notified if excessive early deaths or other problems are encountered that might compromise the integrity of the study.

(D) To avoid bias, the use of adequate randomization procedures for the proper allocation of animals to test and control groups is required.

(E) Each animal should be assigned a unique identification number. Dead animals, their preserved organs and tissues, and microscopic slides should be identified by reference to the unique numbers assigned.

(v) *Husbandry.* (A) Rodents may be group-caged by sex, but the number of animals per cage must not interfere with clear observation of each animal. The biological properties of the test substance or toxic effects (e.g., morbidity, excitability) may indicate a need for individual caging. Rodents should be housed individually in dermal studies and during exposure in inhalation studies. Caging should be appropriate to the nonrodent species.

(B) The temperature of the experimental animal rooms should be at 22 ± 3 °C.

(C) The relative humidity of the experimental animal rooms should be 50 ± 20%.

(D) Where lighting is artificial, the sequence should be 12 hours light/12 hours dark.

(E) Control and test animals should be fed from the same batch and lot. The feed should be analyzed to assure adequacy of nutritional requirements of the species tested and for impurities that might influence the outcome of the test. Animals should be fed and watered ad libitum with food replaced at least weekly.

(F) The study should not be initiated until animals have been allowed a period of acclimatization/quarantine to environmental conditions, nor should animals from outside sources be placed on test without an adequate period of quarantine. An acclimation period of at least 5 days is recommended.

(2) *Control and test substances.* (i) Where necessary, the test substance is dissolved or suspended in a suitable vehicle. If a vehicle or diluent is needed it should not elicit toxic effects itself nor substantially alter the chemical or toxicological properties of the test substance. It is recommended that wherever possible the use of an aqueous solution be the first choice, followed by consideration of solution in oil, and finally, solution in other vehicles.

(ii) One lot of the test substance should be used, if possible, throughout the duration of the study, and the research sample should be stored under conditions that maintain its purity and stability. Prior to the initiation of the study, there should be a characterization of the test substance, including the purity of the test compound, and, if technically feasible, the names and quantities of contaminants and impurities.

(iii) If the test or control substance is to be incorporated into feed or another vehicle, the period during which the test substance is stable in such a mixture should be determined prior to the initiation of the study. Its homogeneity and concentration should be determined prior to the initiation of the study and periodically during the study. Statistically randomized samples

of the mixture should be analyzed to ensure that proper mixing, formulation, and storage procedures are being followed, and that the appropriate concentration of the test or control substance is contained in the mixture.

(3) *Control groups.* A concurrent control group is required. This group should be an untreated or sham-treated control group or, if a vehicle is used in administering the test substance, a vehicle control group. If the toxic properties of the vehicle are not known or cannot be made available, both untreated and vehicle control groups are required.

(4) *Satellite group.* A satellite group of 40 animals (20 animals per sex) for rodents and 8 animals (4 animals per sex) for nonrodents may be treated with the high-dose level for 12 months and observed for reversibility, persistence, or delayed occurrence of toxic effects for a post-treatment of appropriate length, normally not less than 28 days. In addition, a control group of 40 animals (20 animals per sex) for rodents and 8 animals (4 animals per sex) for nonrodents should be added to the satellite study.

(5) *Dose levels and dose selections.* (i) In chronic toxicity tests, it is desirable to determine a dose-response relationship as well as a NOEL. Therefore, at least three dose levels with a control group and, where appropriate, a vehicle control (corresponding to the concentration of the vehicle at the highest exposure level) should be used. Dose levels should be spaced to produce a gradation of effects. A rationale must be provided for the doses selected.

(ii) The highest-dose level should elicit signs of toxicity without substantially altering the normal life span of the animal. The highest dose should be determined based on the findings from a 90-day study to ensure that the dose used is adequate to assess the chronic toxicity of the test substance. Thus, the selection of the highest dose to be tested is dependent upon changes observed in several toxicological parameters in subchronic studies. The highest dose tested need not exceed 1,000 mg/kg/day. If dermal application of the test substance produces severe skin irritation, then it may be necessary either to terminate the study and choose a lower high-dose level or to reduce the dose level. Gross criteria for defining severe irritation would include ulcers, fissures, exudate/crust(eschar), dead tissue, or anything leading to destruction of the functional integrity of the epidermis (e.g. caking, open sores, fissuring, eschar). Histological criteria for defining severe irritation would include follicular and interfollicular crust, microulcer, mild/moderate degeneration/necrosis, moderate/marked epidermal edema, marked dermal edema, and marked inflammation.

(iii) The intermediate dose levels should be spaced to produce a gradation of toxic effects.

(iv) The lowest-dose level should produce no evidence of toxicity.

(6) *Administration of the test substance.* The three main routes of administration are oral, dermal, and inhalation. The choice of the route of administration depends upon the physical and chemical characteristics of the test substance and the form typifying exposure in humans.

(i) *Oral studies.* Ideally, the animals should be dosed by gavage or with capsules on a 7-day per week basis for a period of at least 12 months. However, based primarily on practical considerations, dosing by gavage or capsules on a 5-day per week schedule is acceptable. If the test substance is administered via in the drinking water or mixed in the diet, exposure should be on a 7-day per week basis.

(ii) *Dermal studies.* (A) Preparation of animal skin. Shortly before testing, fur should be clipped from not less than 10% of the body surface area for application of the test substance. In order to dose approximately 10% of the body surface, the area starting at the scapulae (shoulders) to the wing of the ileum (hipbone) and half way down the flank on each side of the animal should be shaved. Shaving should be carried out approximately 24 hours before dosing. Repeated clipping or shaving is usually needed at approximately weekly intervals. When clipping or shaving the fur, care should be taken to avoid abrading the skin which could alter its permeability.

(B) Preparation of test substance. Liquid test substances are generally used undiluted, except as indicated in paragraph (e)(5)(ii) of this section. Solids should be pulverized when possible. The substance should be moistened sufficiently with water or, when necessary, with a suitable vehicle to ensure good contact with the skin. When a vehicle is used, the influence of the vehicle on toxicity of, and penetration of the skin by, the test substance should be taken into account.The volume of application should be kept constant, e.g., less than 100 μL for the mouse and less than 300 μL for the rat. Different concentrations of test solution should be prepared for different dose levels.

(C) Administration of test substance. The duration of exposure should be at least for 12 months. Ideally, the animals should be treated with test substance for at least 6 hours per day on a 7-day per week basis. However, based on practical considerations, application on a 5-day per week basis is acceptable. Dosing should be conducted at approximately the same time each day. The test substance should be applied uniformly over the treatment site. The surface area covered may be less for highly toxic substances. As much of the area should be covered with as thin and uniform a film as possible. For rats, the test substance may be held in contact with the skin with a porous gauze dressing and nonirritating tape if necessary. The test site should be further covered in a suitable manner to retain the gauze dressing plus test substance and to ensure that the animals cannot ingest the test substance. The application site should not be covered when the mouse is the species of choice. The test substance may be wiped from the skin after the six-hour exposure period to prevent ingestion.

(iii) *Inhalation studies.* (A) The animals should be exposed to the test substance for 6 hours per day on a 7-day per week basis, for a period of at least 12 months. However, based primarily on practical considerations, exposure for 6 hours per day on a 5-day per week basis is acceptable.

(B) The animals should be tested in dynamic inhalation equipment designed to sustain a minimum air flow of 10 air changes per hour, an adequate oxygen content of at least 19%, and uniform conditions throughout the exposure chamber. Maintenance of slight negative pressure inside the chamber will prevent leakage of the test substance into surrounding areas. It is not normally necessary to measure chamber oxygen concentration if airflow is adequate.

(C) The selection of a dynamic inhalation chamber should be appropriate for the test substance and test system. When a whole body chamber is used, individual housing must be used to minimize crowding of the test animals and maximize their exposure to the test substance. To ensure stability of a chamber atmosphere, the total volume occupied by the test animals should not exceed 5% of the volume of the test chamber. It is recommended, but not required, that nose-only or head-only exposure be used for aerosol studies in order to minimize oral exposures due to animals licking compound off their fur. The animals should be acclimated and heat stress minimized.

(D) The temperature at which the test is performed should be maintained at 22 ± 2 °C. The relative humidity should be

maintained between 40–60%, but in certain instances (e.g., use of water vehicle) this may not be practicable.

(E) The rate of air flow should be monitored continuously but recorded at least three times during the exposure.

(F) Temperature and humidity should be monitored continuously but should be recorded at least every 30 min.

(G) The actual concentrations of the test substance should be measured in the breathing zone. During the exposure period, the actual concentrations of the test substance should be held as constant as practicable, monitored continuously or intermittently depending on the method of analysis. Chamber concentration may be measured using gravimetric or analytical methods, as appropriate. If trial run measurements are reasonably consistent (± 10% for liquid aerosol, gas, or vapor; ± 20% for dry aerosol), then two measurements should be sufficient. If measurements are not consistent, three to four measurements should be taken. If there is some difficulty measuring chamber analytical concentration due to precipitation, nonhomogeneous mixtures, volatile components, or other factors, additional analysis of inert components may be necessary.

(H) During the development of the generating system, particle size analysis should be performed to establish the stability of aerosol concentrations with respect to particle size. The mass median aerodynamic diameter (MMAD) particle size range should be between 1–3 μm. The particle size of hygroscopic materials should be small enough when dry to assure that the size of the swollen particle will still be within the 1–3 μm range. Measurements of aerodynamic particle size in the animal's breathing zone should be measured during a trial run. If MMAD values for each exposure level are within 10% of each other, then two measurements during the exposures should be sufficient. If pretest measurements are not within 10% of each other, three to four measurements should be taken.

(I) Feed should be withheld during exposure. Water may also be withheld during exposure.

(7) *Observation period.* (i) Animals should be observed for a period of at least 12 months.

(ii) Animals in a satellite group (if used) scheduled for follow-up observations should be kept for at least 28 days further without treatment to detect recovery from, or persistence of, toxic effects.

(8) *Observation of animals.* (i) Observations should be made at least twice each day for morbidity and mortality. Appropriate actions should be taken to minimize loss of animals to the study (e.g., necropsy or refrigeration of those animals found dead and isolation or sacrifice of weak or moribund animals). General clinical observations should be made at least once a day, preferably at the same time each day, taking into consideration the peak period of anticipated effects after dosing. The clinical condition of the animal should be recorded.

(ii) A careful clinical examination should be made at least once prior to the initiation of treatment (to allow for within subject comparisons) and once weekly during treatment in all animals. These observations should be made outside the home cage, preferably in a standard arena, and at similar times on each occasion. Effort should be made to ensure that variations in the observation conditions are minimal. Observations should be detailed and carefully recorded, preferably using scoring systems, explicitly defined by the testing laboratory. Signs noted should include, but not be limited to, changes in skin, fur, eyes, mucous membranes, occurrence of secretions and excretions and autonomic activity (e.g., lacrimation, piloerection, pupil size, unusual respiratory pattern). Changes in gait, posture and response to handling as well as the presence of clonic or tonic movements, stereotypies (e.g., excessive grooming, repetitive circling) or bizarre behavior (e.g., self-mutilation, walking backwards) should be recorded.

(iii) Once, near the end of the first year of the exposure period and in any case not earlier than in month 11, assessment of motor activity, grip strength, and sensory reactivity to stimuli of different types (e.g., visual, auditory, and proprioceptive stimuli) should be conducted in rodents. Further details of the procedures that could be followed are described in the references listed under paragraphs (h)(2), (h)(7), (h)(8), and (h)(11) of this section.

(iv) Functional observations conducted towards the end of the study may be omitted when data on functional observations are available from other studies and the daily clinical observations did not reveal any functional deficits.

(v) Exceptionally, functional observations may be omitted for groups that otherwise reveal signs of toxicity to an extent that would significantly interfere with functional test performance.

(vi) Body weights should be recorded individually for all animals once prior to the administration of the test substance, once a week during the first 13 weeks of study and at least once every 4 weeks thereafter, unless signs of clinical toxicity suggest more frequent weighing to facilitate monitoring of health status.

(vii) Measurements of feed consumption should be determined weekly during the first 13 weeks of the study and at approximately monthly intervals thereafter unless health status or body weight changes dictate otherwise. Measurements of water consumption should be determined at the same intervals if the test substance is administered in the drinking water.

(viii) Moribund animals should be removed and sacrificed when noticed and the time of death should be recorded as precisely as possible. All survivors should be sacrificed at the end of the study period.

(9) *Clinical pathology.* Hematology, clinical chemistry, and urinalysis should be performed on 10 rats per sex per group, and on all nonrodents. In rodents, the parameters should be examined at approximately 6 month intervals during the conduct of the study and at termination. If possible, these collections should be from the same animals at each interval. In nonrodents, the parameters should be examined once or twice prior to initiation of treatment, at 6-month intervals during the conduct of the study, and at termination. If hematological and biochemical effects were seen in the subchronic study, testing should also be performed at 3 months. Overnight fasting of animals prior to blood sampling is recommended.

(i) *Hematology.* The recommended parameters are red blood cell count, hemoglobin concentration, hematocrit, mean corpuscular volume, mean corpuscular hemoglobin, and mean corpuscular hemoglobin concentration, white blood cell count, differential leukocyte count, platelet count, and a measure of clotting potential, such as prothrombin time or activated partial thromboplastin time.

(ii) *Clinical chemistry.* (A) Parameters which are considered appropriate to all studies are electrolyte balance, carbohydrate metabolism, and liver and kidney function. The selection of specific tests will be influenced by observations on the mode of action of the substance and signs of clinical toxicity.

(B) The recommended clinical chemistry determinations are potassium, sodium, calcium (nonrodent), phosphorus (nonrodent), chloride (nonrodent), glucose, total cholesterol, urea nitrogen, creatinine, total protein, total bilirubin (nonrodent), and albumin. More than two hepatic

enzymes, (such as alanine aminotransferase, aspartate aminotransferase, alkaline phosphatase, sorbitol dehydrogenase, or gamma glutamyl transpeptidase) should also be measured. Measurements of additional enzymes (of hepatic or other origin) and bile acids, may also be useful.

(C) If a test chemical has an effect on the hematopoietic system, reticulocyte counts and bone marrow cytology may be indicated.

(D) Other determinations that should be carried out if the test chemical is known or suspected of affecting related measures include calcium, phosphorus, fasting triglycerides, hormones, methemoglobin, and cholinesterases.

(iii) *Urinalysis.* Urinalysis for rodents should be performed at the end of the study using timed urine collection. Urinalysis for nonrodents should be performed prior to treatment, midway through treatment and at the end of the study using timed urine collection. Urinalysis determinations include: appearance, volume, osmolality or specific gravity, pH, protein, glucose, and blood/blood cells.

(10) *Ophthalmological examination.* Examinations should be made of all animals using an ophthalmoscope or equivalent device prior to the administration of the test substance and at termination of the study on 10 rats of each sex in the high-dose and control groups and preferably in all nonrodents, but at least the control and high-dose groups should be examined. If changes in eyes are detected, all animals should be examined.

(11) *Gross necropsy.* (i) All animals should be subjected to a full gross necropsy which includes examination of the external surface of the body, all orifices, and the cranial, thoracic and abdominal cavities and their contents.

(ii) At least the liver, kidneys, adrenals, testes, epididymides, ovaries, uterus, nonrodent thyroid (with parathyroid), spleen, brain, and heart should be weighed wet as soon as possible after dissection to avoid drying. The lungs should be weighed if the test substance is administered by the inhalation route.

(iii) The following organs and tissues, or representative samples thereof, should be preserved in a suitable medium for possible future histopathological examination:

(A) Digestive system—salivary glands, esophagus, stomach, duodenum, jejunum, ileum, cecum, colon, rectum, liver, pancreas, gallbladder (when present).

(B) Nervous system—brain (multiple sections, including cerebrum, cerebellum and medulla/pons), pituitary, peripheral nerve (sciatic or tibial, preferably in close proximity to the muscle), spinal cord (three levels, cervical, mid-thoracic and lumbar), eyes (retina, optic nerve).

(C) Glandular system—adrenals, parathyroid, thyroid.

(D) Respiratory system—trachea, lungs, pharynx, larynx, nose.

(E) Cardiovascular/hematopoietic system—aorta, heart, bone marrow (and/or fresh aspirate), lymph nodes (preferably one lymph node covering the route of administration and another one distant from the route of administration to cover systemic effects), spleen.

(F) Urogenital system—kidneys, urinary bladder, prostate, testes, epididymides, seminal vesicle(s), uterus, ovaries, female mammary gland.

(G) Other—all gross lesions and masses, skin.

(iv) In inhalation studies, the entire respiratory tract, including nose, pharynx, larynx, and paranasal sinuses should be examined and preserved. In dermal studies, skin from treated and adjacent control skin sites should be examined and preserved.

(v) Inflation of lungs and urinary bladder with a fixative is the optimal method for preservation of these tissues. The proper inflation and fixation of the lungs in inhalation studies is considered essential for appropriate and valid histopathological examination.

(vi) Information from clinical pathology and other in-life data should be considered before microscopic examination, since they may provide significant guidance to the pathologist.

(12) *Histopathology.* (i) The following histopathology should be performed:

(A) Full histopathology on the organs and tissues (listed under paragraph (e)(11)(iii) of this section) of all rodents and nonrodents in the control and high-dose groups, and all rodents and nonrodents that died or were sacrificed during the study. The examination should be extended to all animals in all dosage groups if treatment-related changes are observed in the high-dose group.

(B) All gross lesions in all animals.

(C) Target tissues in all animals.

(ii) If the results show substantial alteration of the animal's normal life span, or other effects that might compromise the significance of the data, the next lower levels should be examined fully as described in paragraph (e)(12)(i) of this section.

(iii) An attempt should be made to correlate gross observations with microscopic findings.

(iv) Tissues and organs designated for microscopic examination should be fixed in 10% buffered formalin or a recognized suitable fixative as soon as necropsy is performed and no less than 48 hours prior to trimming.

(f) *Data and reporting*—(1) *Treatment of results.* (i) Data should be summarized in tabular form, showing for each test group the number of animals at the start of the test, the number of animals showing lesions, the types of lesions and the percentage of animals displaying each type of lesion.

(ii) When applicable, all observed results (quantitative and qualitative) should be evaluated by an appropriate statistical method. Any generally accepted statistical methods may be used; the statistical methods including significance criteria should be selected during the design of the study.

(2) *Evaluation of study results.* The findings of a chronic toxicity study should be evaluated in conjunction with the findings of preceding studies and considered in terms of the toxic effects as well as the necropsy and histopathological findings. The evaluation will include the relationship between the dose of the test substance and the presence, incidence, and severity of abnormalities (including behavioral and clinical abnormalities), gross lesions, identified target organs, body weight changes, effects on mortality and any other general or specific toxic effects.

(3) *Test report.* In addition to the reporting requirements specified under EPA Good Laboratory Practice Standards at 40 CFR part 792, subpart J, the following specific information must be reported:

(i) Test substance characterization should include:

(A) Chemical identification.

(B) Lot or batch number.

(C) Physical properties.

(D) Purity/impurities.

(ii) Identification and composition of any vehicle used.

(iii) Test system should contain data on:

(A) Species and strain of animals used and rationale for selection if other than that recommended.

(B) Age including body weight data and sex.

(C) Test environment including cage conditions, ambient temperature, humidity, and light/dark periods.

(D) Identification of animal diet.

(E) Acclimation period.

(iv) Test procedure should include the following data:

(A) Method of randomization used.

(B) Full description of experimental design and procedure.

(C) Dose regimen including levels, methods, and volume.

(v) Test results.

(A) Group animal data. Tabulation of toxic response data by species, strain, sex and exposure level for:

(*1*) Number of animals exposed.

(*2*) Number of animals showing signs of toxicity.

(*3*) Number of animals dying.

(B) Individual animal data. Data should be presented as summary (group mean) as well as for individual animals.

(*1*) Time of death during the study or whether animals survived to termination.

(*2*) Time of observation of each abnormal sign and its subsequent course.

(*3*) Body weight data.

(*4*) Feed and water (if collected) consumption data.

(*5*) Achieved dose (mg/kg/day) as a time-weighted average if the test substance is administered in the diet or drinking water.

(*6*) Results of ophthalmological examinations.

(*7*) Results of hematological tests performed.

(*8*) Results of clinical chemistry tests performed.

(*9*) Urinalysis tests performed and results.

(*10*) Results of observations made.

(*11*) Necropsy findings, including absolute and relative (to body weight) organ weight data.

(*12*) Detailed description of all histopathological findings.

(*13*) Statistical treatment of results, where appropriate.

(vi) In addition, for inhalation studies the following should be reported:

(A) Test conditions. The following exposure conditions must be reported:

(*1*) Description of exposure apparatus including design, type, dimensions, source of air, system for generating particulate and aerosols, method of conditioning air, treatment of exhaust air and the method of housing the animals in a test chamber.

(*2*) The equipment for measuring temperature, humidity, and particulate aerosol concentrations and size should be described.

(B) Exposure data. These data should be tabulated and presented with mean values and a measure of variability (e.g., standard deviation) and should include:

(*1*) Airflow rates through the inhalation equipment.

(*2*) Temperature and humidity of air.

(*3*) Actual (analytical or gravimetric) concentration in the breathing zone.

(*4*) Nominal concentration (total amount of test substance fed into the inhalation equipment divided by volume of air).

(*5*) Particle size distribution, calculated MMAD, and geometric standard deviation.

(*6*) Explanation as to why the desired chamber concentration and/or particle size could not be achieved (if applicable) and the efforts taken to comply with this aspect of the guidelines.

(g) *Quality control.* A system should be developed and maintained to assure and document adequate performance of laboratory staff and equipment. The study must be conducted in compliance with 40 CFR Part 792—Good Laboratory Practice Standards.

(h) *References.* For additional background information on this test guideline, the following references should be consulted. These references are available for inspection at the TSCA Nonconfidential Information Center, Rm. NE–B607, Environmental Protection Agency, 401 M St., SW., Washington, DC, 12 noon to 4 p.m., Monday through Friday, except legal holidays.

(1) Benitz, K.F. Measurement of Chronic Toxicity. *Methods of Toxicology*. Ed. G.E. Paget. Blackwell, Oxford. pp. 82–131 (1970).

(2) Crofton K.M., Howard J.L., Moser V.C., Gill M.W., Leiter L.W., Tilson H.A., MacPhail, R.C. Interlaboratory Comparison of Motor Activity Experiments: Implication for Neurotoxicological Assessments. *Neurotoxicol. Teratol.* 13, 599–609. (1991)

(3) D'Aguanno, W. Drug Safety Evaluation–-Pre-Clinical Considerations. *Industrial Pharmacology: Neuroleptic*. Vol. I, Ed. S. Fielding and H. Lal. Futura, Mt. Kisco, NY. pp. 317–332 (1974).

(4) Fitzhugh, O.G. Chronic Oral Toxicity, Appraisal of the Safety of Chemicals in Foods, Drugs and Cosmetics. The Association of Food and Drug Officials of the United States. pp. 36–45 (1959, 3rd Printing 1975).

(5) Gad S.C. A Neuromuscular Screen for Use in Industrial Toxicology. *Journal of Toxicology and Environmental Health*. 9, 691–704. (1982)

(6) Goldenthal, E.I. and D'Aguanno, W. Evaluation of Drugs, Appraisal of the Safety of Chemicals in Foods, Drugs, and Cosmetics. The Association of Food and Drug Officials of the United States. pp. 60–67 (1959, 3rd Printing 1975).

(7) Meyer O.A., Tilson H.A., Byrd W.C., Riley M.T. A Method for the Routine Assessment of Fore- and Hind-Limb Grip Strength of Rats and Mice. *Neurobehav. Toxicol.* 1, 233–236. (1979)

(8) Moser V.C., McDaniel K.M., Phillips P.M. Rat Strain and Stock Comparisons using a Functional Observational Battery: Baseline Values and Effects of Amitraz. *Toxicol. Appl. Pharmacol.* 108, 267–283 (1991)

(9) Organization for Economic Cooperation and Development. Guidelines for Testing of Chemicals, Section 4-Health Effects, Part 452 Chronic Toxicity Studies, Paris (1981).

(10) Page, N.P. Chronic Toxicity and Carcinogenicity Guidelines. *Journal of Environmental Pathology and Toxicology*. 11:161–182 (1977).

(11) Tupper, D.E., Wallace R.B. Utility of the Neurologic Examination in Rats. *Acta. Neurobiol. Exp.* 40, 999–1003 (1980).

(12) Weingand K., Brown G., Hall R. et al. (1996). Harmonization of Animal Clinical Pathology Testing in Toxicity and Safety Studies. *Fundam. and Appl. Toxicol.* 29:198–201.

### § 799.9430 TSCA combined chronic toxicity/carcinogenicity.

(a) *Scope.* This section is intended to meet the testing requirements under section 4 of the Toxic Substances Control Act (TSCA). The objective of a combined chronic toxicity/carcinogenicity study is to determine the effects of a substance in a mammalian species following prolonged and repeated exposure. The application of this section should generate data which identify the majority of chronic and carcinogenicity effects and determine dose-response relationships. The design and conduct should allow for the detection of neoplastic effects and a determination of the carcinogenic potential as well as general toxicity, including neurological, physiological, biochemical, and hematological effects and exposure-related morphological (pathology) effects.

(b) *Source.* The source material used in developing this TSCA test guideline is the Office of Prevention, Pesticides, and Toxic Substances (OPPTS) harmonized test guideline 870.4300 (August 1998, final guideline). This source is available at the address in paragraph (h) of this section.

(c) *Definitions.* The following definitions apply to this section.

*Carcinogenicity* is the development of neoplastic lesions as a result of the repeated daily exposure of experimental animals to a chemical by the oral, dermal, or inhalation routes of exposure.

*Chronic toxicity* is the adverse effects occurring as a result of the repeated daily exposure of experimental animals to a chemical by the oral, dermal, or inhalation routes of exposure.

*Cumulative toxicity* is the adverse effects of repeated dose occurring as a result of prolonged action on, or

increased concentration of, the administered test substance or its metabolites in susceptible tissues.

*Dose* in a combined chronic toxicity/carcinogenicity study is the amount of test substance administered via the oral, dermal, or inhalation routes for a period of up to 24 months. Dose is expressed as weight of the test substance per unit body weight of test animal (milligrams per kilogram), or as weight of the test substance in parts per million (ppm) in food or drinking water. When exposed via inhalation, dose is expressed as weight of the test substance per unit volume of air (milligrams per liter) or as parts per million per day. For dermal application, dose is expressed as weight of the test substance (grams, milligrams) per unit body weight of the test animal (milligrams per kilogram) or as weight of the substance per unit surface area (milligrams per square centimeter) per day.

*No-observed-effects level* (NOEL) is the maximum dose used in a study which produces no observed adverse effects. The NOEL is usually expressed in terms of the weight of a test substance given daily per unit weight of test animal (milligrams per kilogram per day).

*Target organ* is any organ of a test animal showing evidence of an effect induced by a test substance.

(d) *Limit test.* If a test at one dose level of at least 1,000 mg/kg body weight (expected human exposure may indicate the need for a higher dose level), using the procedures described for this study, produces no observable toxic effects or if toxic effects would not be expected based upon data of structurally related compounds, then a full study using three dose levels might not be necessary.

(e) *Test procedures*—(1) *Animal selection*—(i) *Species and strain.* Preliminary studies providing data on acute, subchronic, and metabolic responses should have been carried out to permit an appropriate choice of animals (species and strain). As discussed in other guidelines, the mouse and rat have been most widely used for assessment of carcinogenic potential, while the rat and dog have been most often studied for chronic toxicity. For the combined chronic toxicity/carcinogenicity study via the oral and inhalation routes, the rat is the species of choice and for the dermal route, the mouse is species of choice. If other species are used, the tester must provide justification/reasoning for their selection. The strain selected should be susceptible to the carcinogenic or toxic effect of the class of substances being tested, if known, and provided it does not have a spontaneous background incidence too high for meaningful assessment. Commonly used laboratory strains must be employed.

(ii) *Age/weight.* (A) Testing must be started with young healthy animals as soon as possible after weaning and acclimatization.

(B) Dosing should generally begin no later than 8 weeks of age.

(C) At commencement of the study, the weight variation of animals used must be within 20% of the mean weight for each sex.

(D) Studies using prenatal or neonatal animals may be recommended under special conditions.

(iii) *Sex.* (A) Equal numbers of animals of each sex must be used at each dose level.

(B) Females must be nulliparous and nonpregnant.

(iv) *Numbers.* (A) At least 100 rodents (50 males and 50 females) must be used at each dose level and concurrent control group. At least 20 additional rodents (10 males and 10 females) should be used for satellite dose groups and the satellite control group. The purpose of the satellite group is to allow for the evaluation of chronic toxicity after 12 months of exposure to the test substance.

(B) For a meaningful and valid statistical evaluation of long term exposure and for a valid interpretation of negative results, the number of animals in any group should not fall below 50% at 15 months in mice and 18 months in rats. Survival in any group should not fall below 25% at 18 months in mice and 24 months in rats.

(C) To avoid bias, the use of adequate randomization procedures for the proper allocation of animals to test and control groups is required.

(D) Each animal must be assigned a unique identification number. Dead animals (and their preserved organs) and tissues, and microscopic slides shall be identified by reference to the unique numbers assigned.

(v) *Husbandry.* (A) Animals may be group-caged by sex, but the number of animals per cage must not interfere with clear observation of each animal. The biological properties of the test substance or toxic effects (e.g., morbidity, excitability) may indicate a need for individual caging. Rodents should be housed individually in dermal studies and during exposure in inhalation studies.

(B) The temperature of the experimental animal rooms should be at 22 ± 3 °C.

(C) The relative humidity of the experimental animal rooms should be 50 ± 20%.

(D) Where lighting is artificial, the sequence should be 12 hours light/12 hours dark.

(E) Control and test animals should be fed from the same batch and lot. The feed should be analyzed to assure uniform distribution and adequacy of nutritional requirements of the species tested and for impurities that might influence the outcome of the test. Animals should be fed and watered ad libitum with food replaced at least weekly.

(F) The study should not be initiated until animals have been allowed a period of acclimatization/quarantine to environmental conditions, nor should animals from outside sources be placed on test without an adequate period of quarantine. An acclimation period of at least five days is recommended.

(2) *Control and test substances.* (i) Where necessary, the test substance is dissolved or suspended in a suitable vehicle. If a vehicle or diluent is needed, it should not elicit toxic effects itself nor substantially alter the chemical or toxicological properties of the test substance. It is recommended that wherever possible the usage of an aqueous solution be considered first, followed by consideration of a solution in oil, and finally solution in other vehicles.

(ii) One lot of the test substance should be used throughout the duration of the study if possible, and the research sample should be stored under conditions that maintain its purity and stability. Prior to the initiation of the study, there should be a characterization of the test substance, including the purity of the test compound, and, if possible, the name and quantities of contaminants and impurities.

(iii) If the test or control substance is to be incorporated into feed or another vehicle, the period during which the test substance is stable in such a mixture should be determined prior to the initiation of the study. Its homogeneity and concentration should be determined prior to the initiation of the study and periodically during the study. Statistically randomized samples of the mixture should be analyzed to ensure that proper mixing, formulation, and storage procedures are being followed, and that the appropriate concentration of the test or control substance is contained in the mixture.

(3) *Control groups.* A concurrent control group is required. This group should be an untreated or sham-treated control group or, if a vehicle is used in administering the test substance, a vehicle control group. If the toxic properties of the vehicle are not known or cannot be made available, both

untreated and vehicle control groups are required.

(4) *Dose levels and dose selection.* (i) For risk assessment purposes, at least three dose levels must be used, in addition to the concurrent control group. Dose levels should be spaced to produce a gradation of effects. A rationale for the doses selected must be provided.

(ii) The highest dose level in rodents should elicit signs of toxicity without substantially altering the normal life span due to effects other than tumors. The highest dose should be determined based on the findings from a 90–day study to ensure that the dose used is adequate to assess the chronic toxicity and the carcinogenic potential of the test substance. Thus, the selection of the highest dose to be tested is dependent upon changes observed in several toxicological parameters in subchronic studies. The highest dose tested need not exceed 1,000 mg/kg/day.

(iii) The intermediate-dose levels should be spaced to produce a gradation of toxic effects.

(iv) The lowest-dose level should produce no evidence of toxicity.

(v) For skin carcinogenicity studies, when toxicity to the skin is a determining factor, the highest dose selected should not destroy the functional integrity of the skin, the intermediate doses should be a minimally irritating dose and the low dose should be the highest nonirritating dose.

(vi) The criteria for selecting the dose levels for skin carcinogenicity studies, based on gross and histopathologic dermal lesions, are as follows:

(A) Gross criteria for reaching the high dose:

(*1*) Erythema (moderate).

(*2*) Scaling.

(*3*) Edema (mild).

(*4*) Alopecia.

(*5*) Thickening.

(B) Histologic criteria for reaching the high dose:

(*1*) Epidermal hyperplasia.

(*2*) Epidermal hyperkeratosis.

(*3*) Epidermal parakeratosis.

(*4*) Adnexal atrophy/hyperplasia.

(*5*) Fibrosis.

(*6*) Spongiosis (minimal-mild).

(*7*) Epidermal edema (minimal-mild).

(*8*) Dermal edema (minimal-moderate).

(*9*) Inflammation (moderate).

(C) Gross criteria for exceeding the high dose:

(*1*) Ulcers-fissures, exudate/crust (eschar), nonviable (dead) tissues.

(*2*) Anything leading to destruction of the functional integrity of the epidermis (e.g., caking, fissuring, open sores, eschar).

(D) Histologic criteria for exceeding the high-dose:

(*1*) Crust (interfollicular and follicular).

(*2*) Microulcer.

(*3*) Degeneration/necrosis (mild to moderate).

(*4*) Epidermal edema (moderate to marked).

(*5*) Dermal edema (marked).

(*6*) Inflammation (marked).

(5) *Administration of the test substance.* The three main routes of administration are oral, dermal, and inhalation. The choice of the route of administration depends upon the physical and chemical characteristics of the test substance and the form typifying exposure in humans.

(i) *Oral studies.* If the test substance is administered by gavage, the animals are dosed with the test substance on a 7–day per week basis for a period of at least 18 months for mice and hamsters and 24 months for rats. However, based primarily on practical considerations, dosing by gavage on a 5–day per week basis is acceptable. If the test substance is administered in the drinking water or mixed in the diet, then exposure should be on a 7–day per week basis.

(ii) *Dermal studies.* (A) Preparation of animal skin. Shortly before testing, fur should be clipped from not less than 10% of the body surface area for application of the test substance. In order to dose approximately 10% of the body surface, the area starting at the scapulae (shoulders) to the wing of the ileum (hipbone) and half way down the flank on each side of the animal should be shaved. Shaving should be carried out approximately 24 hours before dosing. Repeated clipping or shaving is usually needed at approximately weekly intervals. When clipping or shaving the fur, care should be taken to avoid abrading the skin which could alter its permeability.

(B) Preparation of test substance. Liquid test substances are generally used undiluted, except as indicated in paragraph (e)(4)(vi) of this section. Solids should be pulverized when possible. The substance should be moistened sufficiently with water or, when necessary, with a suitable vehicle to ensure good contact with the skin. When a vehicle is used, the influence of the vehicle on toxicity of, and penetration of the skin by, the test substance should be taken into account.The volume of application should be kept constant, e.g., less than 100 μL for the mouse and less than 300 μL for the rat. Different concentrations of test solution should be prepared for different dose levels.

(C) Administration of test substance. The duration of exposure should be at least 18 months for mice and hamsters and 24 months for rats. Ideally, the animals should be treated with test substance for at least 6 hours per day on a 7-day per week basis. However, based on practical considerations, application on a 5-day per week basis is acceptable. Dosing should be conducted at approximately the same time each day. The test substance must be applied uniformly over the treatment site.The surface area covered may be less for highly toxic substances. As much of the area should be covered with as thin and uniform a film as possible. For rats, the test substance may be held in contact with the skin with a porous gauze dressing and nonirritating tape if necessary. The test site should be further covered in a suitable manner to retain the gauze dressing plus test substance and to ensure that the animals cannot ingest the test substance. The application site should not be covered when the mouse is the species of choice. The test substance may be wiped from the skin after the 6-hour exposure period to prevent ingestion.

(iii) *Inhalation studies.* (A) The animals should be exposed to the test substance, for 6 hours per day on a 7–day per week basis, for a period of at least 18 months in mice and 24 months in rats. However, based primarily on practical considerations, exposure for 6 hours per day on a 5–day per week basis is acceptable.

(B) The animals must be tested in dynamic inhalation equipment designed to sustain a minimum air flow of 10 air changes per hour, an adequate oxygen content of at least 19%, and uniform conditions throughout the exposure chamber. Maintenance of slight negative pressure inside the chamber will prevent leakage of the test substance into surrounding areas. It is not normally necessary to measure chamber oxygen concentration if airflow is adequate.

(C) The selection of a dynamic inhalation chamber should be appropriate for the test substance and test system. Where a whole body chamber is used, individual housing must be used to minimize crowding of the test animals and maximize their exposure to the test substance. To ensure stability of a chamber atmosphere, the total volume occupied by the test animals shall not exceed 5% of the volume of the test chamber. It is recommended, but not required, that nose-only or head-only exposure be used for aerosol studies in order to minimize oral exposures due to animals licking compound off their fur. The

animals should be acclimated and heat stress minimized.

(D) The temperature at which the test is performed should be maintained at 22 ± 2 °C. The relative humidity should be maintained between 40 to 60%, but in certain instances (e.g., tests of aerosols, use of water vehicle) this may not be practicable.

(E) The rate of air flow must be monitored continuously but recorded at least three times during the exposure.

(F) Temperature and humidity must be monitored continuously but should be recorded at least every 30 minutes.

(G) The actual concentrations of the test substance must be measured in the animal's breathing zone. During the exposure period, the actual concentrations of the test substance must be held as constant as practicable and monitored continuously or intermittently depending on the method of analysis. Chamber concentration may be measured using gravimetric or analytical methods as appropriate. If trial run measurements are reasonably consistent (± 10% for liquid aerosol, gas, or vapor; ± 20% for dry aerosol), then two measurements should be sufficient. If measurements are not consistent, three to four measurements should be taken. If there is some difficulty in measuring chamber analytical concentration due to precipitation, nonhomogeneous mixtures, volatile components, or other factors, additional analyses of inert components may be necessary.

(H) During the development of the generating system, particle size analysis must be performed to establish the stability of aerosol concentrations with respect to particle size. The mass median aerodynamic diameter (MMAD) particle size range should be between 1–3 μm. The particle size of hygroscopic materials should be small enough when dry to assure that the size of the swollen particle will still be within the 1–3 μm range. Measurements of aerodynamic particle size in the animal's breathing zone should be measured during a trial run. If MMAD values for each exposure level are within 10% of each other, then two measurements during the exposures should be sufficient. If pretest measurements are not within 10% of each other, three to four measurements should be taken.

(I) Feed must be withheld during exposure. Water may also be withheld during exposure.

(J) When the physical and chemical properties of the test substance show a low flash point or the test substance is otherwise known or thought to be explosive, care must be taken to avoid exposure level concentrations that could result in an exposure chamber explosion during the test.

(6) *Observation period.* (i) This time period must not be less than 24 months for rats and 18 months for mice, and ordinarily not longer than 30 months for rats and 24 months for mice. For longer time periods, and where any other species are used, consultation with the Agency in regard to the duration of the study is advised.

(ii) Animals in a satellite group to assess chronic toxicity should be observed for 12 months.

(7) *Observation of animals.* (i) Observations must be made at least twice each day for morbidity and mortality. Appropriate actions should be taken to minimize loss of animals to the study (e.g., necropsy or refrigeration of those animals found dead and isolation or sacrifice of weak or moribund animals). General clinical observations shall be made at least once a day, preferably at the same time each day, taking into consideration the peak period of anticipated effects after dosing. The clinical condition of the animal should be recorded.

(ii) A careful clinical examination must be made at least once weekly. Observations should be detailed and carefully recorded, preferably using explicity defined scales. Observations should include, but not be limited to, evaluation of skin and fur, eyes and mucous membranes, respiratory and circulatory effects, autonomic effects such as salivation, central nervous system effects, including tremors and convulsions, changes in the level of activity, gait and posture, reactivity to handling or sensory stimuli, altered strength, and stereotypes or bizarre behavior (e.g., self-mutilation, walking backwards).

(iii) Signs of toxicity should be recorded as they are observed including the time of onset, degree and duration.

(iv) Body weights must be recorded individually for all animals once prior to administration of the test substance, once a week during the first 13 weeks of the study and at least once every 4 weeks thereafter unless signs of clinical toxicity suggest more frequent weighing to facilitate monitoring of health status.

(v) Measurements of feed consumption should be determined weekly during the first 13 weeks of the study and then at approximately monthly intervals unless health status or body weight changes dictate otherwise. Measurements of water consumption should be determined at the same intervals if the test material is administered in drinking water.

(vi) Moribund animals must be removed and sacrificed when noticed and the time of death should be recorded as precisely as possible. At the end of the study period, all survivors must be sacrificed. Animals in the satellite group must be sacrificed after 12 months of exposure to the test substance (interim sacrifice).

(8) *Clinical pathology.* Hematology, clinical chemistry and urinalyses must be performed from 10 animals per sex per group. The parameters should be examined at approximately 6 month intervals during the first 12 months of the study. If possible, these collections should be from the same animals at each interval. If hematological and biochemical effects are seen in the subchronic study, testing shall also be performed at 3 months. Overnight fasting of animals prior to blood sampling is recommended.

(i) Hematology. The recommended parameters are red blood cell count, hemoglobin concentration, hematocrit, mean corpuscular volume, mean corpuscular hemoglobin, and mean corpuscular hemoglobin concentration, white blood cell count, differential leukocyte count, platelet count, and a measure of clotting potential, such as prothrombin time or activated partial thromboplastin time.

(ii) Clinical chemistry. (A) Parameters which are considered appropriate to all studies are electrolyte balance, carbohydrate metabolism, and liver and kidney function. The selection of specific tests will be influenced by observations on the mode of action of the substance and signs of clinical toxicity.

(B) The recommended clinical chemistry determinations are potassium, sodium, glucose, total cholesterol, urea nitrogen, creatinine, total protein, and albumin. More than two hepatic enzymes, (such as alanine aminotransferase, aspartate aminotransferase, alkaline phosphatase, sorbitol dehydrogenase, or gamma glutamyl transpeptidase) should also be measured. Measurements of addtional enzymes (of hepatic or other origin) and bile acids, may also be useful.

(iii) If a test chemical has an effect on the hematopoietic system, reticulocyte counts and bone marrow cytology may be indicated.

(iv) Other determinations that should be carried out if the test chemical is known or suspected of affecting related measures include calcium, phosphorus, fasting triglycerides, hormones, methemoglobin, and cholinesterases.

(v) Urinalyses. Urinalysis for rodents must be performed at the end of the first year of the study using timed urine collection. Urinalysis determinations include: appearance, volume, osmolality

or specific gravity, pH, protein, glucose, and blood/blood cells.

(9) *Ophthalmological examination.* Examinations must be made on all animals using an ophthalmoscope or an equivalent device prior to the administration of the test substance and at termination of the study on 10 animals per sex in the high-dose and control groups. If changes in eyes are detected, all animals must be examined.

(10) *Gross necropsy.* (i) A complete gross examination must be performed on all animals, including those which died during the experiment or were sacrificed in a moribund condition.

(ii) At least, the liver, kidneys, adrenals, testes, epididymides, ovaries, uterus, spleen, brain, and heart should be trimmed and weighed wet, as soon as possible after dissection to avoid drying. The lungs should be weighed if the test substance is administered by the inhalation route. The organs should be weighed from interim sacrifice animals as well as from at least 10 animals per sex per group at terminal sacrifice.

(iii) The following organs and tissues, or representative samples thereof, must be preserved in a suitable medium for possible future histopathological examination:

(A) Digestive system—salivary glands, esophagus, stomach, duodenum, jejunum, ileum, cecum, colon, rectum, liver, pancreas, gallbladder (when present) .

(B) Nervous system—brain (multiple sections, including cerebrum, cerebellum and medulla/pons), pituitary, peripheral nerve (sciatic or tibial, preferably in close proximity to the muscle), spinal cord (three levels, cervical, mid-thoracic, and lumbar), eyes (retina, optic nerve).

(C) Glandular system—adrenals, parathyroid, thyroid.

(D) Respiratory system—trachea, lungs, pharynx, larynx, nose.

(E) Cardiovascular/Hematopoietic system—aorta, heart, bone marrow (and/or fresh aspirate), lymph nodes (preferably one lymph node covering the route of administration and another one distant from the route of administration to cover systemic effects), spleen.

(F) Urogenital system—kidneys, urinary bladder, prostate, testes, epididymides, seminal vesicle(s), uterus, ovaries, female mammary gland.

(G) Other—all gross lesions and masses, skin.

(iv) In inhalation studies, the entire respiratory tract, including nose, pharynx, larynx, and paranasal sinuses should be examined and preserved. In dermal studies, skin from treated and adjacent control skin sites should be examined and preserved.

(v) Inflation of lungs and urinary bladder with a fixative is the optimal method for preservation of these tissues. The proper inflation and fixation of the lungs in inhalation studies is essential for appropriate and valid histopathological examination.

(vi) Information from clinical pathology and other in-life data should be considered before microscopic examination, since these data may provide significant guidance to the pathologist.

(11) [Reserved]

(12) *Histopathology.* (i) The following histopathology must be performed:

(A) Full histopathology on the organs and tissues, listed in paragraph (e)(10)(iii) of this section of all animals in the control and high dose groups and of all animals that died or were sacrificed during the study.

(B) All gross lesions in all animals.

(C) Target organs in all animals.

(ii) If the results show substantial alteration of the animal's normal life span, the induction of effects that might affect a neoplastic response, or other effects that might compromise the significance of the data, the next lower levels should be examined fully as described in paragraph (e)(12)(i) of this section.

(iii) An attempt should be made to correlate gross observations with microscopic findings.

(iv) Tissues and organs designated for microscopic examination should be fixed in 10% buffered formalin or a recognized suitable fixative as soon as necropsy is performed and no less than 48 hours prior to trimming.

(f) *Data and reporting*—(1) *Treatment of results.* (i) Data must be summarized in tabular form, showing for each test group the number of animals at the start of the test, the number of animals showing lesions, the types of lesions and the percentage of animals displaying each type of lesion.

(ii) When applicable, all observed results, quantitative and qualitative, must be evaluated by an appropriate statistical method. Any generally accepted statistical methods may be used; the statistical methods including significance criteria should be selected during the design of the study.

(2) *Evaluation of study results.* (i) The findings of a combined chronic toxicity/carcinogenicity study should be evaluated in conjunction with the findings of previous studies and considered in terms of the toxic effects, the necropsy and histopathological findings. The evaluation must include the relationship between the dose of the test substance and the presence, incidence and severity of abnormalities (including behavioral and clinical abnormalities), gross lesions, identified target organs, body weight changes, effects on mortality and any other general or specific toxic effects.

(ii) In any study which demonstrates an absence of toxic effects, further investigation to establish absorption and bioavailablity of the test substance should be considered.

(iii) In order for a negative test to be acceptable, it should meet the following criteria—no more than 10% of any group is lost due to autolysis, cannibalism, or management problems, and survival in each group is no less than 50% at 15 months for mice and 18 months for rats. Survival should not fall below 25% at 18 months for mice and 24 months for rats.

(iv) The use of historical control data from an appropriate time period from the same testing laboratory (i.e, the incidence of tumors and other suspect lesions normally occurring under the same laboratory conditions and in the same strain of animals employed in the test) is helpful for assessing the significance of changes observed in the current study.

(3) *Test report.* (i) In addition to the reporting requirements specified under EPA Good Laboratory Practice Standards at 40 CFR part 792, subpart J, the following specific information must be reported:

(A) Test substance characterization should include:

(*1*) Chemical identification.

(*2*) Lot or batch number.

(*3*) Physical properties.

(*4*) Purity/impurities.

(*5*) Identification and composition of any vehicle used.

(B) Test system should contain data on:

(*1*) Species and strain of animals used and rationale for selection if other than that recommended.

(*2*) Age including body weight data and sex.

(*3*) Test environment including cage conditions, ambient temperature, humidity, and light/dark periods.

(*4*) Identification of animal diet.

(*5*) Acclimation period.

(C) Test procedure should include the following data:

(*1*) Method of randomization used.

(*2*) Full description of experimental design and procedure.

(*3*) Dose regimen including levels, methods, and volume.

(4) *Test results.* (i) Group animal data. Tabulation of toxic response data by species, strain, sex, and exposure level for:

(A) Number of animals exposed.

(B) Number of animals showing signs of toxicity.

(C) Number of animals dying.

(ii) Individual animal data. Data should be presented as summary (group mean) as well as for individual animals.

(A) Time of death during the study or whether animals survived to termination.

(B) Time of observation of each abnormal sign and its subsequent course.

(C) Body weight data.

(D) Feed and water consumption data, when collected.

(E) Achieved dose (milligrams/kilogram body weight) as a time-weighed average is the test substance is administered in the diet or drinking water.

(F) Results of ophthalmological examination, when performed.

(G) Results of hematological tests performed.

(H) Results of clinical chemistry tests performed.

(I) Results of urinalysis tests performed.

(J) Results of observations made.

(K) Necropsy findings including absolute/relative organ weight data.

(L) Detailed description of all histopathological findings.

(M) Statistical treatment of results where appropriate.

(N) Historical control data.

(iii) In addition, for inhalation studies the following should be reported:

(A) Test conditions. The following exposure conditions must be reported.

(*1*) Description of exposure apparatus including design, type, dimensions, source of air, system for generating particulates and aerosols, method of conditioning air, treatment of exhaust air and the method of housing the animals in a test chamber.

(*2*) The equipment for measuring temperature, humidity, and particulate aerosol concentrations and size should be described.

(B) Exposure data. These must be tabulated and presented with mean values and a measure of variability (e.g., standard deviation) and should include:

(*1*) Airflow rates through the inhalation equipment.

(*2*) Temperature and humidity of air.

(*3*) Actual (analytical or gravimetric) concentration in the breathing zone.

(*4*) Nominal concentration (total amount of test substance fed into the inhalation equipment divided by volume of air).

(*5*) Particle size distribution, and calculated MMAD and geometric standard deviation.

(*6*) Explanation as to why the desired chamber concentration and/or particle size could not be achieved (if applicable) and the efforts taken to comply with this aspect of the guidelines.

(g) *Quality control.* A system must be developed and maintained to assure and document adequate performance of laboratory equipment. The study must be conducted in compliance with 40 CFR Part 792—Good Laborary Practice Standards.

(h) *References.* For additional background information on this test guideline, the following references should be consulted. These references are available for inspection at the TSCA Nonconfidential Information Center, Rm. NE–B607, Environmental Protection Agency, 401 M St., NW., Washington, DC, 12 noon to 4 p.m., Monday through Friday, except legal holidays.

(1) Benitz, K.F. *Measurement of Chronic Toxicity.* Methods of Toxicology. Ed. G.E. Paget. Blackwell, Oxford. pp. 82–131 (1970).

(2) Crofton K.M., Howard J.L., Moser V.C., Gill M.W., Leiter L.W., Tilson H.A., MacPhail, R.C. Interlaboratory Comparison of Motor Activity Experiments: Implication for Neurotoxicological Assessments. Neurotoxicol. Teratol. 13, 599–609. (1991)

(3) D'Aguanno, W. *Drug Safety Evaluation—Pre-Clinical Considerations. Industrial Pharmacology: Neuroleptic.* Vol. I, Ed. S. Fielding and H. Lal. Futura, Mt. Kisco, NY. pp. 317–332 (1974).

(4) Fitzhugh, O.G. *Chronic Oral Toxicity, Appraisal of the Safety of Chemicals in Foods, Drugs and Cosmetics.* The Association of Food and Drug Officials of the United States. pp. 36–45 (1959, 3rd Printing 1975).

(5) Goldenthal, E.I. and D'Aguanno, W. *Evaluation of Drugs, Appraisal of the Safety of Chemicals in Foods, Drugs, and Cosmetics.* The Association of Food and Drug Officials of the United States. pp. 60–67 (1959, 3rd Printing 1975).

(6) Organization for Economic Cooperation and Development. Guidelines for Testing of Chemicals, Section 4-Health Effects, Part 453 Combined Chronic Toxicity/Carcinogenicity Studies, Paris. (1981).

(7) Page, N.P. Chronic Toxicity and Carcinogenicity Guidelines. *Journal of Environmental Pathology and Toxicology* 11:161–182 (1977).

(8) Page, N.P. Concepts of a Bioassay Program in Environmental Carcinogenesis, Advances in Modern Toxicology. Vol.3, Ed. Kraybill and Mehlman. Hemisphere, Washington, DC pp. 87–171 (1977)

(9) Sontag, J.M. et al. Guidelines for Carcinogen Bioassay in Small Rodents. NCI-CS-TR-1 (Bethesda: United States Cancer Institute, Division of Cancer Control and Prevention, Carcinogenesis Bioassay Program.

(10) Summary of the EPA Workshop on Carcinogenesis Bioassay via the Dermal Route. EPA Report 50/6–89–002; 50/6–89–003. Washington, DC.

(11) The Atlas Of Dermal Lesions, EPA Report 20T–004, U.S Environmental Protection Agency, Washington, DC.

### § 799.9537 TSCA in vitro mammalian chromosome aberration test.

(a) *Scope*—(1) *Applicability.* This section is intended to meet testing requirements under section 4 of the Toxic Substances Control Act (TSCA) (15 U.S.C. 2601).

(2) *Background.* The source material used in developing this TSCA test guideline is the Office of Prevention, Pesticides, and Toxic Substances (OPPTS) harmonized test guideline 870.5375 (August 1998, final guidelines). The source is available at the address in paragraph (i) of this section.

(b) *Purpose.* (1) The purpose of the *in vitro* chromosome aberration test is to identify agents that cause structural chromosome aberrations in cultured mammalian cells (see paragraphs (i)(1), (i)(2), and (i)(3) of this section). Structural aberrations may be of two types, chromosome or chromatid. With the majority of chemical mutagens, induced aberrations are of the chromatid type, but chromosome-type aberrations also occur. An increase in polyploidy may indicate that a chemical has the potential to induce numerical aberrations. However, this guideline is not designed to measure numerical aberrations and is not routinely used for that purpose. Chromosome mutations and related events are the cause of many human genetic diseases and there is substantial evidence that chromosome mutations and related events causing alterations in oncogenes and tumour-suppressor genes of somatic cells are involved in cancer induction in humans and experimental animals.

(2) The *in vitro* chromosome aberration test may employ cultures of established cell lines, cell strains or primary cell cultures. The cells used are selected on the basis of growth ability in culture, stability of the karyotype, chromosome number, chromosome diversity, and spontaneous frequency of chromosome aberrations.

(c) *Definitions.* The definitions in section 3 of TSCA and in 40 CFR Part 792—Good Laboratory Practice

Standards apply to this test guideline. The following definitions also apply to this test guideline.

*Chromatid-type aberration* is structural chromosome damage expressed as breakage of single chromatids or breakage and reunion between chromatids.

*Chromosome-type aberration* is structural chromosome damage expressed as breakage, or breakage and reunion, of both chromatids at an identical site.

*Endoreduplication* is a process in which after an S period of DNA replication, the nucleus does not go into mitosis but starts another S period. The result is chromosomes with 4, 8, 16,...chromatids.

*Gap* is an achromatic lesion smaller than the width of one chromatid, and with minimum misalignment of the chromatid(s).

*Mitotic index* is the ratio of cells in metaphase divided by the total number of cells observed in a population of cells; an indication of the degree of proliferation of that population.

*Numerical aberration* is a change in the number of chromosomes from the normal number characteristic of the cells utilized.

*Polyploidy* is a multiple of the haploid chromosome number (n) other than the diploid number (i.e., 3n, 4n, and so on).

*Structural aberration* is a change in chromosome structure detectable by microscopic examination of the metaphase stage of cell division, observed as deletions and fragments, intrachanges, and interchanges.

(d) *Initial considerations.* (1) Tests conducted *in vitro* generally require the use of an exogenous source of metabolic activation. This metabolic activation system cannot mimic entirely the mammalian *in vivo* conditions. Care should be taken to avoid conditions which would lead to positive results which do not reflect intrinsic mutagenicity and may arise from changes in pH, osmolality, or high levels of cytotoxicity (the test techniques described in the references under paragraphs (i)(4) and (i)(5) of this section may be used).

(2) This test is used to screen for possible mammalian mutagens and carcinogens. Many compounds that are positive in this test are mammalian carcinogens; however, there is not a perfect correlation between this test and carcinogenicity. Correlation is dependent on chemical class and there is increasing evidence that there are carcinogens that are not detected by this test because they appear to act through mechanisms other than direct DNA damage.

(e) *Principle of the test method.* Cell cultures are exposed to the test substance both with and without metabolic activation. At predetermined intervals after exposure of cell cultures to the test substance, they are treated with a metaphase-arresting substance (e.g., Colcemid® or colchicine), harvested, stained, and metaphase cells are analysed microscopically for the presence of chromosome aberrations.

(f) *Description of the method*—(1) *Preparations*—(i) *Cells.* A variety of cell lines, strains, or primary cell cultures, including human cells, may be used (e.g., Chinese hamster fibroblasts, human, or other mammalian peripheral blood lymphocytes).

(ii) *Media and culture conditions.* Appropriate culture media, and incubation conditions (culture vessels, $CO^2$ concentration, temperature and humidity) must be used in maintaining cultures. Established cell lines and strains must be checked routinely for stability in the modal chromosome number and the absence of *Mycoplasma* contamination and should not be used if contaminated. The normal cell-cycle time for the cells and culture conditions used should be known.

(iii) *Preparation of cultures*—(A) *Established cell lines and strains.* Cells are propagated from stock cultures, seeded in culture medium at a density such that the cultures will not reach confluency before the time of harvest, and incubated at 37 °C.

(B) *Lymphocytes.* Whole blood treated with an anti-coagulant (e.g., heparin) or separated lymphocytes obtained from healthy subjects are added to culture medium containing a mitogen (e.g., phytohemagglutinin) and incubated at 37 °C.

(iv) *Metabolic activation.* Cells must be exposed to the test substance both in the presence and absence of an appropriate metabolic activation system. The most commonly used system is a co-factor-supplemented post-mitochondrial fraction (S9) prepared from the livers of rodents treated with enzyme-inducing agents such as Aroclor 1254 (the test techniques described in the references under paragraphs (i)(6), (i)(7), (8)(i), and (i)(9) of this section may be used), or a mixture of phenobarbitone and β-naphthoflavone (the test techniques described in the references under paragraphs (i)(10), (i)(11), and (i)(12) of this section may be used). The post-mitochondrial fraction is usually used at concentrations in the range from 1-10% v/v in the final test medium. The condition of a metabolic activation system may depend upon the class of chemical being tested. In some cases, it may be appropriate to utilize more than one concentration of post-mitochondrial fraction. A number of developments, including the construction of genetically engineered cell lines expressing specific activating enzymes, may provide the potential for endogenous activation. The choice of the cell lines used should be scientifically justified (e.g., by the relevance of the cytochrome P450 isoenzyme for the metabolism of the test substance).

(v) *Test substance/preparation.* Solid test substances should be dissolved or suspended in appropriate solvents or vehicles and diluted, if appropriate, prior to treatment of the cells. Liquid test substances may be added directly to the test systems and/or diluted prior to treatment. Fresh preparations of the test substance should be employed unless stability data demonstrate the acceptability of storage.

(2) *Test conditions*—(i) *Solvent/vehicle.* The solvent/vehicle should not be suspected of chemical reaction with the test substance and must be compatible with the survival of the cells and the S9 activity. If other than well-known solvent/vehicles are used, their inclusion should be supported by data indicating their compatibility. It is recommended that wherever possible, the use of an aqueous solvent/vehicle be considered first. When testing water-unstable substances, the organic solvents used should be free of water. Water can be removed by adding a molecular sieve.

(ii) *Exposure concentrations.* (A) Among the criteria to be considered when determining the highest concentration are cytotoxicity, solubility in the test system, and changes in pH or osmolality.

(B) Cytotoxicity should be determined with and without metabolic activation in the main experiment using an appropriate indication of cell integrity and growth, such as degree of confluency, viable cell counts, or mitotic index. It may be useful to determine cytotoxicity and solubility in a preliminary experiment.

(C) At least three analyzable concentrations should be used. Where cytotoxicity occurs, these concentrations should cover a range from the maximum to little or no toxicity; this will usually mean that the concentrations should be separated by no more than a factor between 2 and $\sqrt{10}$. At the time of harvesting, the highest concentration should show a significant reduction in degree of confluency, cell count or mitotic index, (all greater than 50%). The mitotic

index is only an indirect measure of cytotoxic/cytostatic effects and depends on the time after treatment. However, the mitotic index is acceptable for suspension cultures in which other toxicity measurements may be cumbersome and impractical. Information on cell-cycle kinetics, such as average generation time (AGT), could be used as supplementary information. AGT, however, is an overall average that does not always reveal the existence of delayed subpopulations, and even slight increases in average generation time can be associated with very substantial delay in the time of optimal yield of aberrations. For relatively non-cytotoxic compounds the maximum concentration should be 5 μg/ml, 5mg/ml, or 0.01M, whichever is the lowest.

(D) For relatively insoluble substances that are not toxic at concentrations lower than the insoluble concentration, the highest dose used should be a concentration above the limit of solubility in the final culture medium at the end of the treatment period. In some cases (e.g., when toxicity occurs only at higher than the lowest insoluble concentration) it is advisable to test at more than one concentration with visible precipitation. It may be useful to assess solubility at the beginning and the end of the treatment, as solubility can change during the course of exposure in the test system due to presence of cells, S9, serum etc. Insolubility can be detected by using the unaided eye. The precipitate should not interfere with the scoring.

(iii) *Controls.* (A) Concurrent positive and negative (solvent or vehicle) controls both with and without metabolic activation must be included in each experiment. When metabolic activation is used, the positive control chemical must be the one that requires activation to give a mutagenic response.

(B) Positive controls must employ a known clastogen at exposure levels expected to give a reproducible and detectable increase over background which demonstrates the sensitivity of the test system. Positive control concentrations should be chosen so that the effects are clear but do not immediately reveal the identity of the coded slides to the reader. Examples of positive-control substances include:

| Metabolic activation condition | Chemical | CAS number |
|---|---|---|
| Absence of exogenous metabolic activation | Methyl methanesulfonate | [66–27–3] |
| | Ethyl methanesulfonate | [62–50–0] |
| | Ethylnitrosourea | [759–73–9] |
| | Mitomycin C | [50–07–7] |
| | 4-Nitroquinoline-N-Oxide | [56–57–5] |
| Presence of exogenous metabolic activation | Benzo(a)pyrene | [50–32–8] |
| | Cyclophosphamide | [50–18–0] |
| | (monohydrate) | ([6055–19–2]) |

(C) Other appropriate positive control substances may be used. The use of chemical class-related positive-control chemicals may be considered, when available.

(D) Negative controls, consisting of solvent or vehicle alone in the treatment medium, and treated in the same way as the treatment cultures, must be included for every harvest time. In addition, untreated controls should also be used unless there are historical-control data demonstrating that no deleterious or mutagenic effects are induced by the chosen solvent.

(g) *Procedure*—(1) *Treatment with test substance.* (i) Proliferating cells are treated with the test substance in the presence and absence of a metabolic-activation system. Treatment of lymphocytes should commence at about 48 hours after mitogenic stimulation.

(ii) Duplicate cultures must be used at each concentration, and are strongly recommended for negative/solvent control cultures. Where minimal variation between duplicate cultures can be demonstrated (the test techniques described in the references under paragraphs (i)(13) and (i)(14) of this section may be used), from historical data, it may be acceptable for single cultures to be used at each concentration.

(iii) Gaseous or volatile substances should be tested by appropriate methods, such as in sealed culture vessels (the test techniques described in the references under paragraphs (i)(15) and (i)(16) of this section may be used).

(2) *Culture harvest time.* In the first experiment, cells should be exposed to the test substance both with and without metabolic activation for 3–6 hours, and sampled at a time equivalent to about 1.5 normal cell-cycle length after the beginning of treatment (the test techniques described in the references under paragraph (i)(12) of this section may be used). If this protocol gives negative results both with and without activation, an additional experiment without activation should be done, with continuous treatment until sampling at a time equivalent to about 1.5 normal cell-cycle lengths. Certain chemicals may be more readily detected by treatment/sampling times longer than 1.5 cycle lengths. Negative results with metabolic activation need to be confirmed on a case-by-case basis. In those cases where confirmation of negative results is not considered necessary, justification should be provided.

(3) *Chromosome preparation.* Cell cultures must be treated with Colcemid® or colchicine usually for 1 to 3 hours prior to harvesting. Each cell culture must be harvested and processed separately for the preparation of chromosomes. Chromosome preparation involves hypotonic treatment of the cells, fixation and staining.

(4) *Analysis.* (i) All slides, including those of positive and negative controls, must be independently coded before microscopic analysis. Since fixation procedures often result in the breakage of a proportion of metaphase cells with loss of chromosomes, the cells scored must therefore contain a number of centromeres equal to the modal number ± 2 for all cell types. At least 200 well-spread metaphases should be scored per concentration and control equally divided amongst the duplicates, if applicable. This number can be reduced when high numbers of aberrations are observed.

(ii) Though the purpose of the test is to detect structural chromosome aberrations, it is important to record polyploidy and endoreduplication when these events are seen.

(h) *Data and reporting*—(1) *Treatment of results.* (i) The experimental unit is the cell, and therefore the percentage of cells with structural chromosome aberration(s) should be evaluated. Different types of structural

chromosome aberrations must be listed with their numbers and frequencies for experimental and control cultures. Gaps are recorded separately and reported but generally not included in the total aberration frequency.

(ii) Concurrent measures of cytotoxicity for all treated and negative control cultures in the main aberration experiment(s) should also be recorded.

(iii) Individual culture data should be provided. Additionally, all data should be summarized in tabular form.

(iv) There is no requirement for verification of a clear positive response. Equivocal results should be clarified by further testing preferably using modification of experimental conditions. The need to confirm negative results has been discussed in paragraph (g)(2) of this section. Modification of study parameters to extend the range of conditions assessed should be considered in follow-up experiments. Study parameters that might be modified include the concentration spacing and the metabolic activation conditions.

(2) *Evaluation and interpretation of results.* (i) There are several criteria for determining a positive result, such as a concentration-related increase or a reproducible increase in the number of cells with chromosome aberrations. Biological relevance of the results should be considered first. Statistical methods may be used as an aid in evaluating the test results (see paragraphs (i)(3) and (i)(13) of this section). Statistical significance should not be the only determining factor for a positive response.

(ii) An increase in the number of polyploid cells may indicate that the test substance has the potential to inhibit mitotic processes and to induce numerical chromosome aberrations. An increase in the number of cells with endoreduplicated chromosomes may indicate that the test substance has the potential to inhibit cell-cycle progression (the test techniques described in the references under paragraphs (i)(17) and (i)(18) of this section may be used).

(iii) A test substance for which the results do not meet the criteria in paragraphs (h)(2)(i) and (h)(2)(ii) of this section is considered nonmutagenic in this system.

(iv) Although most experiments will give clearly positive or negative results, in rare cases the data set will preclude making a definite judgement about the activity of the test substance. Results may remain equivocal or questionable regardless of the number of times the experiment is repeated.

(v) Positive results from the *in vitro* chromosome aberration test indicate that the test substance induces structural chromosome aberrations in cultured mammalian somatic cells. Negative results indicate that, under the test conditions, the test substance does not induce chromosome aberrations in cultured mammalian somatic cells.

(3) *Test report.* The test report must include the following information.

(i) Test substance.

(A) Identification data and CAS no., if known.

(B) Physical nature and purity.

(C) Physicochemical properties relevant to the conduct of the study.

(D) Stability of the test substance, if known.

(ii) Solvent/vehicle.

(A) Justification for choice of solvent/vehicle.

(B) Solubility and stability of the test substance in solvent/vehicle, if known.

(iii) Cells.

(A) Type and source of cells.

(B) Karyotype features and suitability of the cell type used.

(C) Absence of *Mycoplasma*, if applicable.

(D) Information on cell-cycle length.

(E) Sex of blood donors, whole blood or separated lymphocytes, mitogen used.

(F) Number of passages, if applicable.

(G) Methods for maintenance of cell cultures if applicable.

(H) Modal number of chromosomes.

(iv) Test conditions.

(A) Identity of metaphase arresting substance, its concentration and duration of cell exposure.

(B) Rationale for selection of concentrations and number of cultures including, e.g., cytotoxicity data and solubility limitations, if available.

(C) Composition of media, $CO^2$ concentration if applicable.

(D) Concentration of test substance.

(E) Volume of vehicle and test substance added.

(F) Incubation temperature.

(G) Incubation time.

(H) Duration of treatment.

(I) Cell density at seeding, if appropriate.

(J) Type and composition of metabolic activation system, including acceptability criteria.

(K) Positive and negative controls.

(L) Methods of slide preparation.

(M) Criteria for scoring aberrations.

(N) Number of metaphases analyzed.

(O) Methods for the measurements of toxicity.

(P) Criteria for considering studies as positive, negative or equivocal.

(v) Results.

(A) Signs of toxicity, e.g., degree of confluency, cell-cycle data, cell counts, mitotic index.

(B) Signs of precipitation.

(C) Data on pH and osmolality of the treatment medium, if determined.

(D) Definition for aberrations, including gaps.

(E) Number of cells with chromosome aberrations and type of chromosome aberrations given separately for each treated and control culture.

(F) Changes in ploidy if seen.

(G) Dose-response relationship, where possible.

(H) Statistical analyses, if any.

(I) Concurrent negative (solvent/vehicle) and positive control data.

(J) Historical negative (solvent/vehicle) and positive control data, with ranges, means and standard deviations.

(vi) Discussion of the results.

(vii) Conclusion.

(i) *References.* For additional background information on this test guideline, the following references should be consulte. These references are available for inspection at the TSCA Nonconfidential Information Center, Rm. NE–B607, Environmental Protection Agency, 401 M St., SW., Washington, DC, 12 noon to 4 p.m., Monday through Friday, except legal holidays.

(1) Evans, H.J. Cytological Methods for Detecting Chemical Mutagens. Chemical Mutagens, Principles and Methods for their Detection, Vol. 4, Hollaender, A. Ed. Plenum Press, New York and London, pp. 1-29 (1976).

(2) Ishidate, M. Jr. and Sofuni, T. The *In Vitro* Chromosomal Aberration Test Using Chinese Hamster Lung (CHL) Fibroblast Cells in Culture. Progress in Mutation Research, Vol. 5, Ashby, J. et al., Eds. Elsevier Science Publishers, Amsterdam-New York-Oxford, pp. 427–432 (1985).

(3) Galloway, S.M. et al. Chromosome aberration and sister chromatid exchanges in Chinese hamster ovary cells: Evaluation of 108 chemicals. *Environmental and Molecular Mutagenesis* 10 (suppl. 10), 1–175 (1987).

(4) Scott, D. et al.. Genotoxicity under Extreme Culture Conditions. A report from ICPEMC Task Group 9. *Mutation Research* 257, 147–204 (1991).

(5) Morita, T. et al. Clastogenicity of Low pH toVarious Cultured Mammalian Cells. *Mutation Research* 268, 297-305 (1992).

(6) Ames, B.N., McCann, J. and Yamasaki, E. Methods for Detecting Carcinogens and Mutagens with the Salmonella/Mammalian Microsome Mutagenicity Test. *Mutation Research* 31, 347–364 (1975).

(7) Maron, D.M. and Ames, B.N. Revised Methods for the Salmonella Mutagenicity Test. *Mutation Research* 113, 173-215 (1983).

(8) Natarajan, A.T. et al. Cytogenetic Effects of Mutagens/Carcinogens after Activation in a Microsomal System In Vitro, I. Induction of Chromosome Aberrations and Sister Chromatid Exchanges by Diethylnitrosamine (DEN) and Dimethylnitrosamine (DMN) in CHO Cells in the Presence of Rat-Liver Microsomes. *Mutation Research* 37, 83–90 (1976).

(9) Matsuoka, A., Hayashi, M. and Ishidate, M., Jr. Chromosomal Aberration Tests on 29 Chemicals Combined with S9 Mix In Vitro. *Mutation Research* 66, 277–290 (1979).

(10) Elliot, B.M. et al. Report of UK Environmental Mutagen Society Working Party. Alternatives to Aroclor 1254-induced S9 in In Vitro Genotoxicity Assays. *Mutagenesis* 7, 175–177 (1992).

(11) Matsushima, T. et al. A Safe Substitute for Polychlorinated Biphenyls as an Inducer of Metabolic Activation Systems. de Serres, F.J., Fouts, J.R., Bend, J.R. and Philpot, R.M. Eds. In Vitro Metabolic Activation in Mutagenesis Testing, Elsevier, North-Holland, pp. 85–88 (1976).

(12) Galloway, S.M. et al. Report from Working Group on In Vitro Tests for Chromosomal Aberrations. *Mutation Research* 312, 241–261 (1994).

(13) Richardson, C. et al. Analysis of Data from In Vitro Cytogenetic Assays. Statistical Evaluation of Mutagenicity Test Data. Kirkland, D.J., Ed. Cambridge University Press, Cambridge, pp. 141–154 (1989).

(14) Soper, K.A. and Galloway S.M. Replicate Flasks are not Necessary for In Vitro Chromosome Aberration Assays in CHO Cells. *Mutation Research* 312, 139–149 (1994).

(15) Krahn, D.F., Barsky, F.C. and McCooey, K.T. CHO/HGPRT Mutation Assay: Evaluation of Gases and Volatile Liquids. Tice, R.R., Costa, D.L., Schaich, K.M. Eds. Genotoxic Effects of Airborne Agents. New York, Plenum, pp. 91–103 (1982).

(16) Zamora, P.O. et al. Evaluation of an Exposure System Using Cells Grown on Collagen Gels for Detecting Highly Volatile Mutagens in the CHO/HGPRT Mutation Assay. *Environmental Mutagenesis* 5, 795–801 (1983).

(17) Locke-Huhle, C. Endoreduplication in Chinese hamster cells during alpha-radiation induced G2 arrest. *Mutation Research* 119, 403-413 (1983).

(18) Huang, Y., Change, C. and Trosko, J.E. Aphidicolin—induced endoreduplication in Chinese hamster cells. *Cancer Research* 43, 1362–1364 (1983).

### § 799.9630 TSCA developmental neurotoxicity.

(a) *Scope*—(1) *Applicability.* This section is intended to meet the testing requirements *under* section 4 of the Toxic Substances Control Act (TSCA).

(2) *Source.* The source material used in developing this TSCA test guideline is the OPPTS harmonized test guideline 870.6300 (August 1998).

(b) *Purpose.* In the assessment and evaluation of the toxic characteristics of a chemical substance or mixture (test substance), determination of the potential for developmental neurotoxicity is important. This study is designed to develop data on the potential functional and morphological hazards to the nervous system which may arise in the offspring from exposure of the mother during pregnancy and lactation.

(c) *Principle of the test method.* The test substance is administered to several groups of pregnant animals during gestation and early lactation, one dose level being used per group. Offspring are randomly selected from within litters for neurotoxicity evaluation. The evaluation includes observations to detect gross neurologic and behavioral abnormalities, determination of motor activity, response to auditory startle, assessment of learning, neuropathological evaluation, and brain weights. This protocol may be used as a separate study, as a followup to a standard developmental toxicity and/or adult neurotoxicity study, or as part of a two-generation reproduction study, with assessment of the offspring conducted on the second ($F^2$) generation.

(d) *Test procedure*—(1) *Animal selection*—(i) *Species and strain.* Testing must be performed in the rat. Because of its differences in timing of developmental events compared to strains that are more commonly tested in other developmental and reproductive toxicity studies, it is preferred that the Fischer 344 strain not be used. If a sponsor wishes to use the Fischer 344 rat or a mammalian species other than the rat, ample justification/reasoning for this selection must be provided.

(ii) *Age.* Young adult (nulliparous females) animals must be used.

(iii) *Sex.* Pregnant female animals must be used at each dose level.

(iv) *Number of animals.* (A) The objective is for a sufficient number of pregnant rats to be exposed to the test substance to ensure that an adequate number of offspring are produced for neurotoxicity evaluation. At least 20 litters are recommended at each dose level.

(B) On postnatal day 4, the size of each litter should be adjusted by eliminating extra pups by random selection to yield, as nearly as possible, four male and four females per litter. Whenever the number of pups of either sex prevents having four of each sex per litter, partial adjustment (for example, five males and three females) is permitted. Testing is not appropriate for litters of less than seven pups. Elimination of runts only is not appropriate. Individual pups should be identified uniquely after standardization of litters. A method that may be used for identification can be found under paragraph (f)(1) of this section.

(v) *Assignment of animals for behavioral tests, brain weights, and neuropathological evaluations.* After standardization of litters, one male or one female from each litter (total of 10 males and 10 females per dose group) must be randomly assigned to one of the following tests: Motor activity, auditory startle, and learning and memory, in weanling and adult animals. On postnatal day 11, either 1 male or 1 female pup from each litter (total of 10 males and 10 females per dose group) must be sacrificed. Brain weights must be measured in all of these pups and, of these pups, six per sex per dose must be selected for neuropathological evaluation. At the termination of the study, either 1 male or 1 female from each litter (total of 10 males and 10 females per dose group) must be sacrificed and brain weights must be measured. An additional group of six animals per sex per dose group (one male or one female per litter) must be sacrificed at the termination of the study for neuropathological evaluation.

(2) *Control group.* A concurrent control group is required. This group must be a sham-treated group or, if a vehicle is used in administering the test substance, a vehicle control group. The vehicle must neither be developmentally toxic nor have effects on reproduction. Animals in the control group must be handled in an identical manner to test group animals.

(3) *Dose levels and dose selection.* (i) At least three dose levels of the test substance plus a control group (vehicle control, if a vehicle is used) must be used.

(ii) If the test substance has been shown to be developmentally toxic either in a standard developmental toxicity study or in a pilot study, the highest dose level must be the maximum dose which will not induce in utero or neonatal death or malformations sufficient to preclude a meaningful evaluation of neurotoxicity.

(iii) If a standard developmental toxicity study has not been conducted, the highest dose level, unless limited by the physicochemical nature or biological properties of the substance, must induce some overt maternal toxicity, but must not result in a reduction in weight gain exceeding 20 percent during gestation and lactation.

(iv) The lowest dose should not produce any grossly observable evidence of either maternal or developmental neurotoxicity.

(v) The intermediate doses must be equally spaced between the highest and lowest doses used.

(4) *Dosing period.* Day 0 of gestation is the day on which a vaginal plug and/or sperm are observed. The dosing period must cover the period from day 6 of gestation through day 10 postnatally. Dosing should not occur on the day of parturition in those animals who have not completely delivered their offspring.

(5) *Administration of the test substance.* The test substance or vehicle must be administered orally. Other routes of administration may be acceptable, on a case-by-case basis, with ample justification/reasoning for this selection. The test substance or vehicle must be administered based on the most recent weight determination.

(6) *Observation of dams.* (i) A gross examination of the dams must be made at least once each day before daily treatment.

(ii) Ten dams per group must be observed outside the home cage at least twice during the gestational dosing period (days 6–21) and twice during the lactational dosing period (days 1–10) for signs of toxicity. The animals must be observed by trained technicians who are unaware of the animals' treatment, using standardized procedures to maximize interobserver reliability. Where possible, it is advisable that the same observer be used to evaluate the animals in a given study. If this is not possible, some demonstration of interobserver reliability is required.

(iii) During the treatment and observation periods under paragraph (d)(6)(ii) of this section, observations must include:

(A) Assessment of signs of autonomic function, including but not limited to:

(*1*) Ranking of the degree of lacrimation and salivation, with a range of severity scores from none to severe.

(*2*) Presence or absence of piloerection and exophthalmus.

(*3*) Ranking or count of urination and defecation, including polyuria and diarrhea.

(*4*) Pupillary function such as constriction of the pupil in response to light or a measure of pupil size.

(*5*) Degree of palpebral closure, e.g., ptosis.

(B) Description, incidence, and severity of any convulsions, tremors, or abnormal movements.

(C) Description and incidence of posture and gait abnormalities.

(D) Description and incidence of any unusual or abnormal behaviors, excessive or repetitive actions (stereotypies), emaciation, dehydration, hypotonia or hypertonia, altered fur appearance, red or crusty deposits around the eyes, nose, or mouth, and any other observations that may facilitate interpretation of the data.

(iv) Signs of toxicity must be recorded as they are observed, including the time of onset, degree, and duration.

(v) Animals must be weighed at least weekly and on the day of delivery and postnatal days 11 and 21 (weaning) and such weights must be recorded.

(vi) The day of delivery of litters must be recorded and considered as postnatal day 0.

(7) *Study conduct*—(i) *Observation of offspring.* (A) All offspring must be examined cage-side at least daily for gross signs of mortality or morbidity.

(B) A total of 10 male offspring and 10 female offspring per dose group must be examined outside the cage for signs of toxicity on days 4, 11, 21, 35, 45, and 60. The offspring must be observed by trained technicians, who are unaware of the treatment being used, using standardized procedures to maximize interobserver reliability. Where possible, it is advisable that the same observer be used to evaluate the animals in a given study. If this is not possible, some demonstration of interobserver reliability is required. At a minimum, the end points outlined in paragraph (d)(6)(iii) of this section must be monitored as appropriate for the developmental stage being observed.

(C) Any gross signs of toxicity in the offspring must be recorded as they are observed, including the time of onset, degree, and duration.

(ii) *Developmental landmarks.* Live pups must be counted and each pup within a litter must be weighed individually at birth or soon thereafter, and on postnatal days 4, 11, 17, and 21 and at least once every 2 weeks thereafter. The age of vaginal opening and preputial separation must be determined. General procedures for these determinations may be found in paragraphs (f)(1) and (f)(11) of this section.

(iii) *Motor activity.* Motor activity must be monitored specifically on postnatal days 13, 17, 21, and 60 (+2 days). Motor activity must be monitored by an automated activity recording apparatus. The device must be capable of detecting both increases and decreases in activity, (i.e., baseline activity as measured by the device must not be so low as to preclude detection of decreases nor so high as to preclude detection of increases in activity). Each device must be tested by standard procedures to ensure, to the extent possible, reliability of operation across devices and across days for any one device. In addition, treatment groups must be balanced across devices. Each animal must be tested individually. The test session must be long enough for motor activity to approach asymptotic levels by the last 20 percent of the session for nontreated control animals. All sessions must have the same duration. Treatment groups must be counter-balanced across test times. Activity counts must be collected in equal time periods of no greater than 10 minutes duration. Efforts must be made to ensure that variations in the test conditions are minimal and are not systematically related to treatment. Among the variables that can affect motor activity are sound level, size and shape of the test cage, temperature, relative humidity, light conditions, odors, use of home cage or novel test cage, and environmental distractions. Additional information on the conduct of a motor activity study may be obtained in § 799.9620.

(iv) *Auditory startle test.* An auditory startle habituation test should be performed on the offspring around the time of weaning and around day 60. Day of testing should be counterbalanced across treated and control groups. Details on the conduct of this testing may be obtained under paragraph (f)(1) of this section. In performing the auditory startle task, the mean response amplitude on each block of 10 trials (5 blocks of 10 trials per session on each day of testing) must be made. While use of prepulse inhibition is not a requirement, it is highly recommended. Details on the conduct of this test may be obtained in paragraph (f)(10) of this section.

(v) *Learning and memory tests.* A test of associative learning and memory should be conducted around the time of weaning and around day 60. Day of testing should be counterbalanced across treated and control groups. The same or separate tests may be used at these two stages of development. Some flexibility is allowed in the choice of tests for learning and memory in weanling and adult rats. However, the tests must be designed to fulfill two

criteria. First, learning must be assessed either as a change across several repeated learning trials or sessions, or, in tests involving a single trial, with reference to a condition that controls for nonassociative effects of the training experience. Second, the tests must include some measure of memory (short-term or long-term) in addition to original learning (acquisition). If the tests of learning and memory reveal an effect of the test compound, it may be in the best interest of the sponsor to conduct additional tests to rule out alternative interpretations based on alterations in sensory, motivational, and/or motor capacities. In addition to the above two criteria, it is recommended that the test of learning and memory be chosen on the basis of its demonstrated sensitivity to the class of compound under investigation, if such information is available in the literature. In the absence of such information, examples of tests that could be made to meet the above criteria include: Delayed-matching-to-position, as described for the adult rat (see paragraph (f)(3) of this section) and for the infant rat (see paragraph (f)(9) of this section); olfactory conditioning, as described in paragraph (f)(13) of this section; and acquisition and retention of schedule-controlled behavior (see paragraphs (f)(4) and (f)(5) of this section). Additional tests for weanling rats are described under paragraphs (f)(20) and (f)(12) of this section, and for adult rats under paragraph (f)(16) of this section.

(vi) *Neuropathology*. Neuropathological evaluation must be conducted on animals on postnatal day 11 and at the termination of the study. At 11 days of age, one male or female pup must be removed from each litter such that equal numbers of male and female offspring are removed from all litters combined. Of these, six male and six female pups per dose group will be sacrificed for neuropathological analysis. The pups will be sacrificed by exposure to carbon dioxide and immediately thereafter the brains should be removed, weighed, and immersion-fixed in an appropriate aldehyde fixative. The remaining animals will be sacrificed in a similar manner and immediately thereafter their brains removed and weighed. At the termination of the study, one male or one female from each litter will be sacrificed by exposure to carbon dioxide and immediately thereafter the brain must be removed and weighed. In addition, six animals per sex per dose group (one male or female per litter) must be sacrificed at the termination of the study for neuropathological evaluation. Neuropathological analysis of animals sacrificed at the termination of the study must be performed in accordance with § 799.9620. Neuropathological evaluation of animals sacrificed on postnatal day 11 and at termination of the study must include a qualitative analysis and semiquantitative analysis as well as simple morphometrics.

(A) *Fixation and processing of tissue samples for postnatal day 11 animals*. Immediately following removal, the brain must be weighed and immersion fixed in an appropriate aldehyde fixative. The brains must be postfixed and processed according to standardized published histological protocols such as those discussed in references listed under paragraphs (f)(6), (f)(14), (f)(17), and (f)(21) of this section. Paraffin embedding is acceptable but plastic embedding is preferred and recommended. Tissue blocks and slides must be appropriately identified when stored. Histological sections must be stained for hematoxylin and eosin, or a similar stain according to standard published protocols such as those discussed in references listed under paragraphs (f)(2), (f)(18), and (f)(23) of this section. For animals sacrificed at the termination of the study, methods for fixation and processing of tissue samples are provided in § 799.9620(e)(7)(iv)(A).

(B) *Qualitative analysis*. The purposes of the qualitative examination are threefold—to identify regions within the nervous system exhibiting evidence of neuropathological alterations, to identify types of neuropathological alterations resulting from exposure to the test substance, and to determine the range of severity of the neuropathological alterations. Representative histological sections from the tissue samples should be examined microscopically by an appropriately trained pathologist for evidence of neuropathological alterations. The following stepwise procedure is recommended for the qualitative analysis. First, sections from the high dose group are compared with those of the control group. If no evidence of neuropathological alterations is found in animals of the high dose group, no further analysis is required. If evidence of neuropathological alterations are found in the high dose group, then animals from the intermediate and low dose group are examined. Subject to professional judgment and the kind of neuropathological alterations observed, it is recommended that additional methods such as Bodian's or Bielchowsky's silver methods and/or immunohistochemistry for glial fibrillary acid protein be used in conjunction with more standard stains to determine the lowest dose level at which neuropathological alterations are observed. Evaluations of postnatal day 11 pups is described in paragraphs (d)(7)(vi)(B)(*1*) and (d)(7)(vi)(B)(*2*) of this section. For animals sacrificed at the termination of the study, the regions to be examined and the types of alterations that must be assessed are identified in § 799.9620(e)(7)(iv)(B).

(*1*) *Regions to be examined*. The brains should be examined for any evidence of treatment-related neuropathological alterations and adequate samples should be taken from all major brain regions (e.g., olfactory bulbs, cerebral cortex, hippocampus, basal ganglia, thalamus, hypothalamus, midbrain (tectum, tegmentum, and cerebral peduncles), brainstem and cerebellum) to ensure a thorough examination.

(*2*) *Types of alterations*. Guidance for neuropathological examination for indications of developmental insult to the brain can be found in paragraphs (f)(8) and (f)(22) of this section. In addition to more typical kinds of cellular alterations (e.g., neuronal vacuolation, degeneration, necrosis) and tissue changes (e.g., astrocytic proliferation, leukocytic infiltration, and cystic formation) particular emphasis should be paid to structural changes indicative of developmental insult including but not restricted to:

(*i*) Gross changes in the size or shape of brain regions such as alterations in the size of the cerebral hemispheres or the normal pattern of foliation of the cerebellum.

(*ii*) The death of neuronal precursors, abnormal proliferation, or abnormal migration, as indicated by pyknotic cells or ectopic neurons, or gross alterations in regions with active proliferative and migratory zones, alterations in transient developmental structures (e.g., the external germinal zone of the cerebellum, see paragraph (f)(15) of this section).

(*iii*) Abnormal differentiation, while more apparent with special stains, may also be indicated by shrunken and malformed cell bodies.

(*iv*) Evidence of hydrocephalus, in particular enlargement of the ventricles, stenosis of the cerebral aqueduct and general thinning of the cerebral hemispheres.

(C) *Subjective diagnosis*. If any evidence of neuropathological alterations is found in the qualitative examination, then a subjective diagnosis will be performed for the purpose of

evaluating dose-response relationships. All regions of the brain exhibiting any evidence of neuropathological changes must be included in this analysis. Sections of each region from all dose groups will be coded as to treatment and examined in randomized order. The frequency of each type and the severity of each lesion will be recorded. After all sections from all dose groups including all regions have been rated, the code will be broken and statistical analyses performed to evaluate dose-response relationships. For each type of dose related lesion observed, examples of different ranges of severity must be described. The examples will serve to illustrate a rating scale, such as 1+, 2+, and 3+ for the degree of severity ranging from very slight to very extensive.

(D) *Simple morphometric analysis*. Since the disruption of developmental processes is sometimes more clearly reflected in the rate or extent of growth of particular brain regions, some form of morphometric analysis must be performed on postnatal day 11 and at the termination of the study to assess the structural development of the brain. At a minimum, this would consist of a reliable estimate of the thickness of major layers at representative locations within the neocortex, hippocampus, and cerebellum. For guidance on such measurements see Rodier and Gramann under paragraph (f)(19) of this section.

(e) *Data collection, reporting, and evaluation*. The following specific information must be reported:

(1) *Description of test system and test methods*. A description of the general design of the experiment should be provided. This must include:

(i) A detailed description of the procedures used to standardize observations and procedures as well as operational definitions for scoring observations.

(ii) Positive control data from the laboratory performing the test that demonstrate the sensitivity of the procedures being used. These data do not have to be from studies using prenatal exposures. However, the laboratory must demonstrate competence in evaluation of effects in neonatal animals perinatally exposed to chemicals and establish test norms for the appropriate age group.

(iii) Procedures for calibrating and ensuring the equivalence of devices and the balancing of treatment groups in testing procedures.

(iv) A short justification explaining any decisions involving professional judgement.

(2) *Results*. The following information must be arranged by each treatment and control group:

(i) In tabular form, data for each animal must be provided showing:

(A) Its identification number and the litter from which it came.

(B) Its body weight and score on each developmental landmark at each observation time.

(C) Total session activity counts and intrasession subtotals on each day measured.

(D) Auditory startle response amplitude per session and intrasession amplitudes on each day measured.

(E) Appropriate data for each repeated trial (or session) showing acquisition and retention scores on the tests of learning and memory on each day measured.

(F) Time and cause of death (if appropriate); any neurological signs observed; a list of structures examined as well as the locations, nature, frequency, and extent of lesions; and brain weights.

(ii) The following data should also be provided, as appropriate:

(A) Inclusion of photomicrographs demonstrating typical examples of the type and extent of the neuropathological alterations observed is recommended.

(B) Any diagnoses derived from neurological signs and lesions, including naturally occurring diseases or conditions, should also be recorded.

(iii) Summary data for each treatment and control group must include:

(A) The number of animals at the start of the test.

(B) The body weight of the dams during gestation and lactation.

(C) Litter size and mean weight at birth.

(D) The number of animals showing each abnormal sign at each observation time.

(E) The percentage of animals showing each abnormal sign at each observation time.

(F) The mean and standard deviation for each continuous endpoint at each observation time. These will include body weight, motor activity counts, auditory startle responses, performance in learning and memory tests, regional brain weights and whole brain weights (both absolute and relative).

(G) The number of animals in which any lesion was found.

(H) The number of animals affected by each different type of lesion, the location, frequency and average grade of each type of lesion for each animal.

(I) The values of all morphometric measurements made for each animal listed by treatment group.

(3) *Evaluation of data*. An evaluation of test results must be made. The evaluation must include the relationship between the doses of the test substance and the presence or absence, incidence, and extent of any neurotoxic effect. The evaluation must include appropriate statistical analyses. The choice of analyses must consider tests appropriate to the experimental design and needed adjustments for multiple comparisons. The evaluation must include the relationship, if any, between observed neuropathological and behavioral alterations.

(f) *References*. For additional background information on this test guideline, the following references should be consulted. These references are available for inspection at the TSCA Nonconfidential Information Center, Rm. NE–B607, Environmental Protection Agency, 401 M St., SW., Washington, DC, 12 noon to 4 p.m., Monday through Friday, except legal holidays.

(1) Adams, J., Buelke-Sam, J., Kimmel, C.A., Nelson, C.J., Reiter, L.W., Sobotka, T.J., Tilson, H.A., and Nelson, B.K. Collaborative behavioral teratolgy study: Protocol design and testing procedures.*Neurobehavioral Toxicology and Teratology* 7:579–586 (1985).

(2) Bennett, H.S., Wyrick, A.D., Lee, S.W., and McNeil, J.H. Science and art in preparing tissues embedded in plastic for light microscopy, with special reference to glycol methacrylate, glass knives and simple stains. *Stain Technology* 51:71–97 (1976).

(3) Bushnell, P.J. Effects of delay, intertrial interval, delay behavior and trimethyltin on spatial delayed response in rats. *Neurotoxicology and Teratology* 10:237–244 (1988).

(4) Campbell, B.A. and Haroutunian, V. Effects of age on long-term memory: Retention of fixed interval responding. *Journal of Gerontology* 36:338–341 (1981).

(5) Cory-Slechta, D.A., Weiss, B., and Cox, C. Delayed behavioral toxicity of lead with increasing exposure concentration. *Toxicology and Applied Pharmacology* 71:342–352 (1983).

(6) Di Sant Agnese, P. A. and De Mesy Jensen, K.L. Dibasic staining of large epoxy tissue sections and application to surgical pathology. *American Journal of Clinical Pathology* 81:25–29 (1984).

(7) U.S. Environmental Protection Agency. Neurotoxicity Screening Battery. In: Pesticide Assessment Guidelines, Subdivision F, Addendum 10. EPA 540/09–91–123. NTIS PB 91–154617 (1991).

(8) Friede, R. L. *Developmental Neuropathology*. Springer-Verlag, New York. pp. 1–23, 297–313, 326–351 (1975).

(9) Green, R.J. and Stanton, M.E. Differential ontogeny of working memory and reference memory in the

rat. *Behavioral Neuroscience* 103:98–105 (1989).

(10) Ison, J.R. Reflex modification as an objective test for sensory processing following toxicant exposure. *Neurobehavioral Toxicology and Teratology* 6:437–445 (1984).

(11) Korenbrot, C.C., Huhtaniemi, I.T., and Weiner, R.I. Preputial separation as an external sign of pubertal development in the male rat. *Biology of Reproduction* 17:298–303 (1977).

(12) Krasnegor, N.A., Blass, E.M., Hofer, M.A., and Smotherman, W.P. (eds.) *Perinatal Development: A Psychobiological Perspective.* Academic Press, Orlando. pp.11–37, 145–167. (1987).

(13) Kucharski, D. and Spear, N.E. Conditioning of aversion to an odor paired with peripheral shock in the developing rat. *Developmental Psychobiology* 17:465–479 (1984).

(14) Luna, L. G. (editor). *Manual of Histologic Staining Methods of the Armed Forces Institute of Pathology.* (Third Edition). McGraw-Hill, New York. pp. 1–31 (1968).

(15) Miale, I. L. and Sidman, R.L. An autoradiographic analysis of histogenesis in the mouse cerebellum. *Experimental Neurology.* 4:277–296 (1961).

(16) Miller, D.B. and Eckerman, D.A. Learning and memory measures. In: *Neurobehavioral Toxicology*, Z. Annau (ed). Johns Hopkins University Press, Baltimore. pp. 94–149 (1986).

(17) Pender, M.P. A simple method for high resolution light microscopy of nervous tissue. *Journal of Neuroscience Methods.* 15:213–218 (1985).

(18) Ralis, H.M., Beesley, R.A., and Ralis, Z.A. *Techniques in Neurohistology.* Butterworths, London. pp. 57–145 (1973).

(19) Rodier, P.M. and Gramann, W.J. Morphologic effects of interference with cell proliferation in the early fetal period. *Neurobehavioral Toxicology* 1:129–135 (1979).

(20) Spear, N.E. and Campbell, B.A. (eds.) *Ontogeny of Learning and Memory.* Erlbaum, New Jersey. pp. 101–133, 157–224 (1979).

(21) Spencer, P.S., Bischoff, M.C., and Schaumburg, H.H. Neuropathological methods for the detection of neurotoxic disease. In: *Experimental and Clinical Neurotoxicology. Spencer, P.S. and Schaumburg, H.H. (eds.).* Williams and Wilkins, Baltimore. pp. 743–757 (1980).

(22) Suzuki, K. Special vulnerabilities of the developing nervous system to toxic substances. In: *Experimental and Clinical Neurotoxicology.* Spencer, P.S. and Schaumburg, H.H. (eds.). Williams and Wilkins, Baltimore. pp. 48–61 (1980). (23) Luna, L.G. (ed.). Manual of Histologic Staining Methods of the Armed Forces Institute of Pathology. (Third Edition). McGraw-Hill, New York. pp. 32–46 (1968).

### § 799.9748 TSCA metabolism and pharmacokinetics

(a) *Scope.* (1) This section is intended to meet the testing requirements under section 4 of the Toxic Substances Control Act (TSCA). (1) Testing of the disposition of a test substance is designed to obtain adequate information on its absorption, distribution, biotransformation, and excretion and to aid in understanding the mechanism of toxicity. Basic pharmacokinetic parameters determined from these studies will also provide information on the potential for accumulation of the test substance in tissues and/or organs and the potential for induction of biotransformation as a result of exposure to the test substance. These data can be used to assess the adequacy and relevance of the extrapolation of animal toxicity data (particularly chronic toxicity and/or carcinogenicity data) to human risk assessment.

(2) Metabolism data can also be used to assist in determining whether animal toxicity studies have adequately addressed any toxicity concerns arising from exposure to plant metabolites, and in the setting of tolerances, if any, for those metabolites in raw agricultural commodities.

(b) *Source.* The source material used in developing this TSCA test guideline is the Office of Prevention, Pesticides and Toxic Substances (OPPTS) harmonized test guideline 870.7485 (August 1998, final guideline). This source is available at the address in paragraph (h) of this section.

(c) *Definitions.* The following definitions apply to this section.

*Metabolism (biotransformation)* is the sum of the processes by which a foreign chemical is subjected to chemical change by living organisms.

*LOEL* is the lowest observable effects level.

*NOEL* is the no observable effects level.

*Pharmacokinetics* is the quantitation and determination of the time course and dose dependency of the absorption, distribution, biotransformation, and excretion of chemicals.

(d) *Good laboratory practice standards.* The pharmacokinetics and metabolism tests outlined in this guideline must conform to the laboratory practices stipulated in 40 CFR Part 792—Good Laboratory Practice Standards.

(e) *Test Procedures.* Test procedures presented below utilize a tier system to minimize the use of resources and to allow flexibility in the conduct of metabolism studies. The proposed tier system consists of a basic data set (Tier 1) and additional studies (Tier 2). These additional studies may be requested based upon the existing toxicology data base and/or the results of Tier 1 testing which are found to impact upon the risk assessment process. For Tier 1 testing, the oral route will typically be required; however, if the use pattern results in other types of exposure, other routes (dermal and/or inhalation) may be required for initial testing of the disposition of a chemical substance. The registrant should justify the route of exposure to the Agency. Complete descriptions of the test procedures for these other routes of exposure can be found in paragraph (i) of this section. Except in unusual circumstances, the tiered approach to metabolism testing should apply to all listed routes of exposure.

(1) *Pilot studies.* The use of pilot studies is recommended and encouraged for the selection of experimental conditions for the pharmacokinetics and metabolism studies (mass balance, analytical procedures, dose-finding, excretion of $CO_2$, etc.).

(2) *Animal selection*—(i) *Species.* The rat must normally be used for testing because it has been used extensively for metabolic and toxicological studies. The use of other or additional species may be required if critical toxicology studies demonstrate evidence of significant toxicity in these species or if metabolism is shown to be more relevant to humans in the test species.

(ii) *Strain.* Adult animals of the strain used or proposed to be used for the determination of adverse health effects associated with the test substance.

(3) *Material to be tested*—(i) *Test substance.* (A) A radiolabeled test substance using $^{14}C$ should be used for all material balance and metabolite identification aspects of the study. Other radioactive and stable isotopes may be used, particularly if the element is responsible for or is a part of the toxic portion of the compound. If it can be demonstrated that the material balance and metabolite identification requirements can be met using unlabeled test substance, then radiolabeled compound need not be used. If possible, the radiolabel should be located in a core portion of the molecule which is metabolically stable (it is not exchangeable, is not removed metabolically as $CO_2$, and does not become part of the one-carbon pool of the organism). Labeling of multiple sites of the molecule may be necessary to

follow the metabolic fate of the compound.

(B) The label should follow the test compound and/or its major metabolites until excreted. The radiopurity of the radioactive test substance shall be the highest attainable for a particular test substance (ideally it should be greater than 95%) and reasonable effort should be made to identify impurities present at or above 2%. The purity, along with the identity of major impurities which have been identified, shall be reported. For other segments of the study, nonradioactive test substance may be used if it can be demonstrated that the analytical specificity and sensitivity of the method used with nonradioactive test substance is equal to or greater than that which could be obtained with the radiolabeled test substance. The radioactive and nonradioactive test substances shall be analyzed using an appropriate method to establish purity and identity. Additional guidance will be provided in chemical specific test rules to assist in the definition and specifications of test substances composed of mixtures and methods for determination of purity.

(ii) *Administration of test substance.* Test substance should be dissolved or suspended homogeneously in a vehicle usually employed for acute administration. A rationale for the choice of vehicle should be provided. The customary method of administration will be by oral gavage; however, administration by gelatin capsule or as a dietary mixture may be advantageous in specific situations. Verification of the actual dose administered to each animal should be provided.

(4) *Tier testing.* (i) The multiplicity of metabolic parameters that impact the outcome of toxicological evaluations preclude the use of a universal study design for routine toxicological evaluation of a test substance. The usefulness of a particular study design depends upon the biological activity of a compound and circumstances of exposure. For these reasons, a tiered system is proposed for evaluation of the metabolism/kinetic properties of a test substance.

(ii) The first tier data set is a definitive study by the appropriate route of exposure conducted in male rats to determine the routes and rate of excretion and to identify excreted metabolites. First tier data will also provide basic information for additional testing (Tier 2) if such testing is considered necessary. In the majority of cases, Tier 1 data are expected to satisfy regulatory requirements for biotransformation and pharmacokinetic data on test chemicals.

(iii) Second tier testing describes a variety of metabolism/kinetic experiments which address specific questions based on the existing toxicology data base and/or those results of Tier 1 testing impacting significantly on the risk assessment process. For conduct of these studies, individualized protocols may be necessary. Protocols for these studies, if required, can be developed as a cooperative effort between Agency and industry scientists.

(f) *Tier 1 data requirements (minimum data set).* At this initial level of testing, biotransformation and pharmacokinetic data from a single low dose group will be required. This study will determine the rate and routes of excretion and the type of metabolites generated.

(1) *Number and sex of animals.* A minimum of four male young adult animals must be used for Tier 1 testing. The use of both sexes may be required in cases where there is evidence to support significant sex-related differences in toxicity.

(2) *Dose selection.* (i) A single dose is required for each route of exposure. The dose should be nontoxic, but high enough to allow for metabolite identification in excreta. If no other toxicity data are available for selection of the low dose, a dose identified as a fraction of the $LD_{50}$ (as determined from acute toxicity studies) may be used. The magnitude of the dose used in Tier 1 studies should be justified in the final report.

(ii) For test substances of low toxicity a maximum dose of 1,000 mg/kg should be used; chemical-specific considerations may necessitate a higher maximum dose and will be addressed in specific test rules.

(3) *Measurements*—(i) *Excretion.* (A) Data obtained from this section (percent recovery of administered dose from urine, feces, and expired air) will be used to determine the rate and extent of excretion of test chemical, to assist in establishing mass balance, and will be used in conjunction with pharmacokinetic parameters to determine the extent of absorption. The quantities of radioactivity eliminated in the urine, feces, and expired air shall be determined separately at appropriate time intervals.

(B) If a pilot study has shown that no significant amount of radioactivity is excreted in expired air, then expired air need not be collected in the definitive study.

(C) Each animal must be placed in a separate metabolic unit for collection of excreta (urine, feces and expired air). At the end of each collection period, the metabolic units must be rinsed with appropriate solvent to ensure maximum recovery of radiolabel. Excreta collection must be terminated at 7 days, or after at least 90% of the administered dose has been recovered, whichever occurs first. The total quantities of radioactivity in urine must be determined at 6, 12, and 24 hours on day 1 of collection, and daily thereafter until study termination, unless pilot studies suggest alternate or additional time points for collection. The total quantities of radioactivity in feces should be determined on a daily basis beginning at 24 hours post-dose, and daily thereafter until study termination. The collection of $CO_2$ and other volatile materials may be discontinued when less than 1% of the administered dose is found in the exhaled air during a 24-hour collection period.

(ii) *Tissue distribution.* At the termination of the Tier 1 study, the following tissues should be collected and stored frozen: Liver, fat, gastrointestinal tract, kidney, spleen, whole blood, and residual carcass. If it is determined that a significant amount of the administered dose is unaccounted for in the excreta, then data on the percent of the total (free and bound) radioactive dose in these tissues as well as residual carcass will be requested. Additional tissues must be included if there is evidence of target organ toxicity from subchronic or chronic toxicity studies. For other routes of exposure, specific tissues may also be required, such as lungs in inhalation studies and skin in dermal studies. Certain techniques currently at various stages of development, e.g., quantitative whole-body autoradiography, may prove useful in determining if a test substance concentrates in certain organs or in determining a specific pattern of distribution within a given tissue. The use of such techniques is encouraged, but not required, and may be employed to limit the number of tissues collected to those shown to contain a measurable amount of radioactivity.

(iii) *Metabolism.* Excreta must be collected for identification and quantitation of unchanged test substance and metabolites as described in paragraph (f)(3)(i) of this section. Pooling of excreta to facilitate metabolite identification within a given dose group is acceptable. Profiling of metabolites from each time period is recommended. However, if lack of sample and/or radioactivity precludes this, pooling of urine as well as pooling of feces across several time points is acceptable. Appropriate qualitative and quantitative methods must be used to

assay urine, feces, and expired air from treated animals. Reasonable efforts should be made to identify all metabolites present at 5% or greater of the administered dose and to provide a metabolic scheme for the test chemical. Compounds which have been characterized in excreta as comprising 5% or greater of the administered dose should be identified. If identification at this level is not possible, a justification/explanation should be provided in the final report. Identification of metabolites representing less than 5% of the administered dose might be requested if such data are needed for risk assessment of the test chemical. Structural confirmation should be provided whenever possible. Validation of the methods used in metabolite identification should be included.

(g) *Tier 2 data requirements.* Studies at the Tier 2 level are designed to answer questions about the disposition of test chemicals based on the existing toxicology data base and/or results of Tier 1 testing which may have a significant impact on the risk assessment for the test chemical. Such studies may address questions regarding absorption, persistence, or distribution of the test chemical, or a definitive alteration in the metabolic profile occurring with dose which may be of toxicological concern. At the Tier 2 level, only those studies which address a specific concern are required, and if required must be conducted according to mutual agreement between the registrant and the Agency. Flexibility will be allowed in the design of specific experiments as warranted by technological advances in this field.

(1) *Absorption.* (i) If the extent of absorption cannot be established from Tier 1 studies, or where greater than 20% of the administered dose is present in feces, a study to determine the extent of absorption will be required. This can be accomplished either through intravenous administration of test material and measurement of radioactivity in excreta or after oral administration of test material and measurement of radioactivity in bile.

(ii) For the intravenous study, a single dose (not to exceed the oral dose used in Tier 1) of test chemical using an appropriate vehicle should be administered in a suitable volume (e.g., 1 mL/kg) at a suitable site to at least three male rats (both sexes might be used if warranted). The disposition of the test chemical should be monitored for oral dosing as outlined in paragraph (f)(3)(i) of this section. Metabolite identification will not be required for this study.

(iii) If a biliary excretion study is chosen the oral route of administration may be requested. In this study, the bile ducts of at least three male rats (or of both sexes, if warranted) should be appropriately cannulated and a single dose of the test chemical should be administered to these rats. Following administration of the test chemical, excretion of radioactivity in bile should be monitored as long as necessary to determine if a significant percentage of the administered dose is excreted via this route.

(2) *Tissue distribution time course.* (i) A time course of tissue distribution in selected tissues may be required to aid in the determination of a possible mode of toxic action. This concern may arise from evidence of extended half-life or possible accumulation of radioactivity in specific tissues. The selection of tissues for this type of study will be based upon available evidence of target organ toxicity and/or carcinogenicity, and the number of time points required will be based upon pharmacokinetic information obtained from Tier 1 data. Flexibility will be allowed in the selection of time points to be studied.

(ii) For this type of study, three rats per time point will be administered an appropriate oral dose of test chemical, and the time course of distribution monitored in selected tissues. Only one sex may be required, unless target organ toxicity is observed in sex-specific organs. Assessment of tissue distribution will be made using appropriate techniques for assessment of total amount distributed to tissue and for assessment of metabolite distribution.

(3) *Plasma kinetics.* The purpose of this experiment is to obtain estimates of basic pharmacokinetic parameters (half-life, volume of distribution, absorption rate constant, area under the curve) for the test substance. Kinetic data may be required if the data can be used to resolve issues about bioavailability and to clarify whether clearance is saturated in a dose-dependent fashion. For this experiment a minimum of three rats per group is required. At least two doses will be required, usually the NOEL and LOEL from the critical toxicology study. Following administration of test substance, samples should be obtained from each animal at suitable time points appropriate sampling methodology. Total radioactivity present (or total amount of chemical, for nonradioactive materials) should be analyzed in whole blood and plasma using appropriate methods, and the blood/plasma ratio should be calculated.

(4) *Induction.* (i) Studies addressing possible induction of biotransformation may be requested under one or more of the following conditions:

(A) Available evidence indicates a relationship between induced metabolism and enhanced toxicity.

(B) The available toxicity data indicate a nonlinear relationship between dose and metabolism.

(C) The results of Tier 1 metabolite identification studies show identification of a potentially toxic metabolite.

(D) Induction can plausibly be invoked as a factor in such effects where status may depend on the level of inducible enzymes present. Several *in vivo* and *in vitro* methods are available for assessment of enzyme induction, and the experiments which best address the issue at hand can be determined between Agency and industry scientists. If induction is demonstrated, the relationship of this phenomenon to toxicity observed from subchronic and/or chronic toxicity studies will need to be addressed.

(ii) [Reserved]

(iii) If toxicologically significant alterations in the metabolic profile of the test chemical are observed through either *in vitro* or *in vivo* experiments, characterization of the enzyme(s) involved (for example, Phase I enzymes such as isozymes of the Cytochrome P450–dependent mono-oxygenase system, Phase II enzymes such as isozymes of sulfotransferase or uridine diphosphate glucuronosyl transferase, or any other relevant enzymes) may be requested. This information will help establish the relevance of the involved enzyme(s) to human risk, as it is known that certain isozymes are present in animal species which are not present in humans, and vice versa.

(5) *Physiologically-based modeling.* Traditional methods of modeling have been used to determine kinetic parameters associated with drug and xenobiotic disposition, but have assumed a purely mathematical construct of mammalian organisms in their operation. On the other hand, more recent models which take into account the physiological processes of the animal have been used with success in defining biological determinants of chemical disposition as well as the relationship between tissue dose and tissue response. These so-called physiologically-based models, also allow for cross-species extrapolation which is often necessary in the risk-assessment process. The use of physiologically-based modeling as an experimental tool for addressing specific issues related to biotransformation and pharmacokinetics of a test substance is encouraged.

Information as derived from physiologically-based modeling experiments may aid in the comparison of biotransformation and pharmacokinetics of a test substance between animal species and humans, and in the assessment of risk under specific exposure conditions. At the discretion of the Agency, or by mutual agreement, results of physiologically based pharmacokinetic (PBPK) studies with parent compound may be submitted in lieu of other studies, if it is determined that such data would provide adequate information to satisfy this guideline.

(h) *Reporting of study results.* In addition to the reporting requirements specified under EPA Good Laboratory Practice Standards at 40 CFR part 792, subpart J, the completed study (Tier 1 or Tier 2) should be presented in the following format:

(1) *Title/cover page.* Title page and additional requirements (requirements for data submission, good laboratory practice, statements of data confidentiality claims and quality assurance) if relevant to the study report, should precede the content of the study formatted below. These requirements are to be found in 40 CFR parts 790, 792, and 799.

(2) *Table of contents.* A concise listing must precede the body of the report, containing all essential elements of the study and the page and table number where the element is located in the final report of the study. Essential elements of the table of contents should include a summary, an introduction, the materials and methods section, results, discussion/conclusions, references, tables, figures, appendices, and key subsections as deemed appropriate. The table of contents should include the page number of each of these elements.

(3) *Body of the report.* The body of the report must include information required under this section, organized into sections and paragraphs as follows:

(i) *Summary.* This section of the study report must contain a summary and analysis of the test results and a statement of the conclusions drawn from the analysis. This section should highlight the nature and magnitude of metabolites, tissue residue, rate of clearance, bioaccumulation potential, sex differences, etc. The summary should be presented in sufficient detail to permit independent evaluation of the findings.

(ii) *Introduction.* This section of the report should include the objectives of the study, guideline references, regulatory history, if any, and a rationale.

(iii) *Materials and methods.* This section of the report must include detailed descriptions of all elements including:

(A) *Test substance.* (*1*) This section should include identification of the test substance—chemical name, molecular structure, qualitative and quantitative determination of its chemical composition, and type and quantities of any impurities whenever possible.

(*2*) This section should also include information on physical properties including physical state, color, gross solubility and/or partition coefficient, and stability.

(*3*) The type or description of any vehicle, diluents, suspending agents, and emulsifiers or other materials used in administering the test substance should be stated.

(*4*) If the test substance is radiolabeled, information on the following should be included in this subsection: The type of radionuclide, position of label, specific activity, and radiopurity.

(B) *Test animals.* This section should include information on the test animals, including: Species, strain, age at study initiation, sex, body weight, health status, and animal husbandry.

(C) *Methods.* This subsection should include details of the study design and methodology used. It should include a description of:

(*1*) How the dosing solution was prepared and the type of solvent, if any, used.

(*2*) Number of treatment groups and number of animals per group.

(*3*) Dosage levels and volume.

(*4*) Route of administration.

(*5*) Frequency of dosing.

(*6*) Fasting period (if used).

(*7*) Total radioactivity per animal.

(*8*) Animal handling.

(*9*) Sample collection.

(*10*) Sample handling.

(*11*) Analytical methods used for separation.

(*12*) Quantitation and identification of metabolites.

(*13*) Other experimental measurements and procedures employed (including validation of test methods for metabolite analysis).

(D) *Statistical analysis.* If statistical analysis is used to analyze the study findings, then sufficient information on the method of analysis and the computer program employed should be included so that an independent reviewer/statistician can reevaluate and reconstruct the analysis. Presentation of models should include a full description of the model to allow independent reconstruction and validation of the model.

(iv) *Results.* All data should be summarized and tabulated with appropriate statistical evaluation and placed in the text of this section. Radioactivity counting data should be summarized and presented as appropriate for the study, typically as disintegrations per minute and microgram or milligram equivalents, although other units may be used. Graphic illustrations of the findings, reproduction of representative chromatographic and spectrometric data, and proposed metabolic pathways and molecular structure of metabolites should be included in this section. In addition the following information is to be included in this section if applicable:

(A) Justification for modification of exposure conditions, if applicable.

(B) Justification for selection of dose levels for pharmacokinetic and metabolism studies.

(C) Description of pilot studies used in the experimental design of the pharmacokinetic and metabolism studies, if applicable.

(D) Quantity and percent recovery of radioactivity in urine, feces, and expired air, as appropriate. For dermal studies, include recovery data for treated skin, skin washes, and residual radioactivity in the covering apparatus and metabolic unit as well as results of the dermal washing study.

(E) Tissue distribution reported as percent of administered dose and microgram equivalents per gram of tissue.

(F) Material balance developed from each study involving the assay of body tissues and excreta.

(G) Plasma levels and pharmacokinetic parameters after administration by the relevant routes of exposure.

(H) Rate and extent of absorption of the test substance after administration by the relevant routes of exposure.

(I) Quantities of the test substance and metabolites (reported as percent of the administered dose) collected in excreta.

(J) Individual animal data.

(v) *Discussion and conclusions.* (A) In this section the author(s) should:

(*1*) Provide a plausible explanation of the metabolic pathway for the test chemical.

(*2*) Emphasize species and sex differences whenever possible.

(*3*) Discuss the nature and magnitude of metabolites, rates of clearance, bioaccumulation potential, and level of tissue residues as appropriate.

(B) The author(s) should be able to derive a concise conclusion that can be supported by the findings of the study.

(vi) *Optional sections.* The authors may include additional sections such as appendices, bibliography, tables, etc.

(i) *Alternate routes of exposure for Tier 1 testing*—(1) *Dermal*—(i) *Dermal treatment.* One (or more if needed) dose levels of the test substance must be used in the dermal portion of the study. The low dose level should be selected in accordance with paragraph (f)(2) of this section. The dermal doses must be dissolved, if necessary, in a suitable vehicle and applied in a volume adequate to deliver the doses. Shortly before testing, fur is to be clipped from the dorsal area of the trunk of the test animals. Shaving may be employed, but it should be carried out approximately 24 hour before the test. When clipping or shaving the fur, care should be taken to avoid abrading the skin, which could alter its permeability. Approximately 10% of the body surface should be cleared for application of the test substance. With highly toxic substances, the surface area covered may be less than approximately 10%, but as much of the area as possible is to be covered with a thin and uniform film. The same nominal treatment surface area must be used for all dermal test groups. The dosed areas are to be protected with a suitable covering which is secured in place. The animals must be housed separately.

(ii) *Dermal washing study.* (A) A washing experiment must be conducted to assess the removal of the applied dose of the test substance by washing the treated skin area with a mild soap and water. A single dose must be applied to two animals in accordance with paragraph (f)(2) of this section. After application (2 to 5 minutes) the treated areas of the animals must be washed with a mild soap and water. The amounts of test substance recovered in the washes must be determined to assess the effectiveness of removal by washing.

(B) Unless precluded by corrosiveness, the test substance must be applied and kept on the skin for a minimum of 6 hours. At the time of removal of the covering, the treated area must be washed following the procedure as outlined in the dermal washing study. Both the covering and the washes must be analyzed for residual test substance. At the termination of the studies, each animal must be sacrificed and the treated skin removed. An appropriate section of treated skin must be analyzed to determine residual radioactivity.

(2) *Inhalation.* A single (or more if needed) concentration of test substance must be used in this portion of the study. The concentration should be selected in accordance with paragraph (f)(2) of this section. Inhalation treatments are to be conducted using a ''nose-cone'' or ''head-only'' apparatus to prevent absorption by alternate routes of exposure. If other inhalation exposure conditions are proposed for use in a chemical-specific test rule, justification for the modification must be documented. A single exposure over a defined period must be used for each group—a typical exposure is 4–6 hours.

[FR Doc. 00–31728 Filed 12–14–00; 8:45 am]

BILLING CODE 6560–50–F

Federal Register

Friday,
December 15, 2000

# Part VII

# Securities and Exchange Commission

## Self-Regulatory Organizations; Filing of a Proposed Rule Change by the Pacific Exchange, Inc. and Amendment No. 1 Thereto Relating to the Archipelago Exchange; Notice

## SECURITIES AND EXCHANGE COMMISSION

**[Release No. 34–43608; File No. SR–PCX–00–25]**

## Self-Regulatory Organizations; Notice of Filing of a Proposed Rule Change by the Pacific Exchange, Inc. and Amendment No. 1 Thereto Relating to the Archipelago Exchange

November 21, 2000.

Pursuant to Section 19(b)(1) under the Securities Exchange Act of 1934 (''Act'') [1] and Rule 19b–4 thereunder,[2] notice is hereby given that on July 31, 2000, the Pacific Exchange, Inc. (''PCX'' or ''Exchange''), through its subsidiary PCX Equities, Inc. (''PCXE'' or ''Corporation'') pursuant to delegated authority, filed with the Securities and Exchange Commission (''Commission'' or ''SEC'') the proposed rule change as described in Items I, II and III below, which Items have been prepared by the PCXE. On November 9, 2000, the Exchange filed Amendment No. 1 to the proposal.[3] The Commission is publishing this notice to solicit comments on the proposed rule change, as amended, from interested persons.

### I. Self-Regulatory Organization's Statement of the Terms of Substance of the Proposed Rule Change

The PCX, through its wholly-owned subsidiary PCXE, proposes to create a new electronic trading facility of the PCXE, called the Archipelago Exchange (''Arca''). The text of the proposed rule change has been posted to the Commission's web site, www.sec.gov, and is attached here (in blacklined version) as Appendix A.

### II. Self-Regulatory Organization's Statement of the Purpose of, and Statutory Basis for, the Proposed Rule Change

In its filing with the Commission, the PCXE included statements concerning the purpose of, and basis for, the proposed rule change and discussed any comments it received on the proposed rule change. The text of these statements may be examined at the places specified in Item IV below. The PCXE has prepared summaries, set forth in sections A, B, and C below, of the most significant aspects of such statements.

[1] 15 U.S.C. 78s(b)(1).

[2] 17 CFR 240.19b–4.

[3] This notice represents Amendment No. 1 and replaces the proposed rule change, as originally filed, in its entirety. *See* letter from Cherie Macauley, Counsel for the Exchange, Wilmer, Cutler, & Pickering, to John Polise, Senior Special Counsel, Division of Market Regulation, dated November 9, 2000 (''Amendment No. 1'').

*A. Self-Regulatory Organization's Statement of the Purpose of, and Statutory Basis for, the Proposed Rule Change*

The PCXE proposes to establish rules for Arca, a new exchange facility, as that term is defined in Section 3(a)(2) of the Act.[4] Arca, which is to be operated by Archipelago Exchange, L.L.C., would be an electronic securities communications and trading facility intended for the use of Equity Trading Permit (''ETP'') Holders and their customers.[5] Arca would provide automatic order execution capabilities in the equity securities listed or traded on the PCXE. It is the PCXE's intent to operate the Arca facility in the place of the PCXE's traditional floor trading environment and thus PCXE also proposes to eliminate the existing PCXE Rules related to floor trading.

1. Relationship of Archipelago Exchange, L.L.C., to PCX Equities, Inc.

The PCX and PCXE have entered into various agreements with Archipelago Holdings, L.L.C., under which Archipelago Exchange, L.L.C., a subsidiary of Archipelago Holdings, L.L.C., would operate Arca as a facility of the PCXE. Pursuant to these agreements, PCX and PCXE would maintain responsibility for all regulatory functions related to the facility and Archipelago Exchange, L.L.C., would be responsible for the business of the facility to the extent those activities are not inconsistent with the regulatory and oversight functions of PCX and PCXE.

The relationship between the PCX, PCXE, and the Archipelago entities is explained further in proposed PCXE Rule 14.3.[6] Under proposed PCXE Rule 14.3(a), the books, records, premises, officers, directors, agents and employees of Archipelago Exchange, L.L.C., would be deemed to be the books, records, premises, officers, directors, agents and employees of PCX and PCXE for purposes of, and subject to, oversight pursuant to the Act. The books and records of Archipelago Exchange, L.L.C., would be subject at all times to inspection and copying by the PCX, PCX Equities, and the SEC. In addition, proposed PCXE Rule 14.3(b) states that ''[a]ll officers and directors of Archipelago Holdings, L.L.C., shall be deemed to be officers and directors of PCX and PCXE for purposes of and subject to oversight pursuant to the Securities Exchange Act.'' As set forth in proposed PCXE Rule 14.3(c), however, paragraphs (a) and (b) of proposed PCXE Rule 14.3 would not be deemed to create any rights or benefits for any person or entity other than the SEC.

2. Archipelago Exchange

The PCXE describes Arca, the proposed electronic trading venue, as a limit order book, characterized by price-time priority that would provide execution enhancements such as additional order types. Under the proposal, market makers would participate electronically in Arca to enhance liquidity in the book and could interact with order flow subject to automatic price improvement requirements. In addition, orders could be crossed on Arca subject to price improvement where the price and time priority of the limit order book is protected.

Arca is described in more detail in the following subsections. Specifically, subsection (a) describes who may access Arca. Subsection (b) discusses the registration requirements as well as the trading obligations of market makers and Odd Lot Dealers. Subsection (c) describes trading on Arca in detail, including a description of how orders are executed during Arca's three trading sessions. Finally, subsections (d) through (g) discusses the proposed rules regarding trade execution and reporting, clearance and settlement, Arca's interaction with OptiMark, and the limitation of liability with regard to Arca, respectively.

a. *Access to the Archipelago Exchange.* The PCXE would authorize any ETP Holder or Sponsored Participant (collectively, ''Users'')[7] who meet certain enumerated requirements to obtain access to Arca. A ''Sponsored Participant'' is a person, such as an institutional investor, who has entered into a sponsorship arrangement with an

[4] Under the Act the ''term ''facility'' when used with respect to an exchange includes its premises, tangible or intangible property whether on the premises or not, any right to the use of such premises or property or any service thereof for the purpose of effecting or reporting a transaction on an exchange (including, among other things, any system of communication to or from the exchange, by ticker or otherwise, maintained by or with the consent of the exchange), and any right of the exchange to the use of any property or service.'' *See* 15 U.S.C. 78c(a)(2).

[5] *See* proposed PCXE Rule 1.1(e) (definition of ''Archipelago Exchange'').

[6] In addition to proposed PCXE Rule 14.3, the PCXE proposes to clarify the Delegation Plan by adding the following language to proposed PCXE Rule 14.1(b): ''and all officers, directors, employees, and agents of PCX Equities are officers, directors, employees, and agents of the PCX for purposes of the Act. The books and records of PCX Equities would be subject at all times to inspection and copying by the PCX.''

[7] *See* proposed PCXE Rule 1.1(oo) (definition of ''User'').

ETP Holder.[8] The requirements for access are as follows: First, all Users—both ETP Holders and Sponsored Participants—would have to enter into a User Agreement[9] with Archipelago Exchange, L.L.C., the operator of the Arca facility.[10] Second, Sponsored Participants would have to enter into a sponsorship arrangement with a ''Sponsoring ETP Holder,'' which is defined as an ETP Holder that has been designated by a Sponsored Participant to execute, clear and settle transactions on Arca.[11] The sponsorship arrangement consists of three separate components. First, the Sponsored Participant would have to enter into and maintain a customer agreement with its Sponsoring ETP Holder, establishing a proper relationship and account through which the Participant may trade on Arca.[12]

Second, the Sponsored Participant and its Sponsoring ETP Holder would have to enter into a written agreement which incorporates the Sponsorship Provisions,[13] which include the following:

(1) The Sponsoring ETP Holder acknowledges and agrees that: (i) All orders entered by its Sponsored Participant and any person acting on behalf of or in the name of such Sponsored Participant and any executions occurring as a result of such orders are binding in all respects on the Sponsoring ETP Holder and (ii) the Sponsoring ETP Holder is responsible for any and all actions taken by such Sponsored Participant and any person acting on behalf of or in the name of such Sponsored Participant.

(2) The Sponsored Participant agrees that it will comply with the PCXE Certificate of Incorporation, Bylaws, Rules and procedures with regard to its activity on Arca, as if the Sponsored Participant were an ETP Holder.

(3) The Sponsored Participant agrees that it will maintain, keep current and provide to the Sponsoring ETP Holder a list of its Authorized Traders who may obtain access to Arca on behalf of the Sponsored Participant(s).

(4) The Sponsored Participant agrees that it will familiarize its Authorized Traders with all of the Sponsored Participant's obligations under its Arca-related agreements and the PCXE Rules and will assure that they receive appropriate training prior to any use or access to Arca.

(5) The Sponsored Participant agrees that it will not permit anyone other than Authorized Traders to use or obtain access to Arca.

(6) The Sponsored Participant agrees that it will take reasonable security precautions to prevent unauthorized use or access to Arca, including unauthorized entry of information into Arca, or the information and data made available therein. The Sponsored Participant understands and agrees that it is responsible for any and all orders, trades and other messages and instructions entered, transmitted or received under identifiers, passwords and security codes of Authorized Traders, and for the trading and other consequences thereof.

(7) The Sponsored Participant acknowledges its responsibility for establishing adequate procedures and controls that permit it to effectively monitor its employees, agents and customers' use of and access to Arca for compliance with the terms of the Sponsorship Provisions.

(8) The Sponsored Participant agrees that it will pay when due all amounts, if any, payable to the Sponsoring ETP Holder, Archipelago Exchange, L.L.C., PCXE, or any other third parties that arise from the Sponsored Participant's access to and use of Arca. Such amounts include, but are not limited to, applicable exchange and regulatory fees.[14]

Finally, the Sponsoring ETP Holder would have to provide PCXE with a ''Notice of Consent,[15] which acknowledges the Sponsoring ETP Holder's its responsibility for the orders, executions and actions of its Sponsored Participant.[16]

As a further condition to access to Arca, each ETP Holder would have to maintain an up-to-date list of persons who could obtain access to Arca on behalf of the ETP Holder or the ETP Holder's Sponsored Participants, *i.e.,* Authorized Traders,[17]) and provide the list to the PCXE upon request. In addition, each ETP Holder would have to have have reasonable procedures to ensure that all of its Authorized Traders maintain the physical security of Arca and otherwise comply with the PCXE Rules. If the PCXE determines that an Authorized Trader has caused an ETP Holder to violate the PCXE Rules, the PCXE may could direct the ETP Holder to suspend or withdraw the person's status as an Authorized Trader.[18]

b. *Market Makers.* The PCXE intends to replace its traditional floor specialists with makers [19] trading on Arca. Based on this change, the PCXE proposes to delete all existing PCXE Rules related to specialists and substitute rules related to market makers, as discussed in more detail below.[20] The registered market makers would be designated as dealer-specialists on the PCXE for all purposes under the Act.[21]

i. *Registration of Market Makers.* To act as a market maker on Arca, an ETP Holder would have to register as a market maker by filing a written application with the PCXE.[22] In determining whether to approve a market maker application, the PCXE will would consider, among other things, the ETP Holder's capital operations, personnel, technical resources, and disciplinary history.[23] The applicant's registration would become effective upon receipt by the ETP Holder of notice of the PCXE's approval of the registration. If the application is disapproved, the applicant would have the opportunity to be heard upon the specific grounds of the denial under the provisions of Rule 10.13.[24]

A market maker's registration could be suspended or terminated by the PCXE upon a determination of any substantial or continued failure by the market maker to engage in dealings in accordance with the market maker's obligations under proposed PCXE Rule 7.23, as discussed below.[25] In addition, a registered market maker could withdraw its registration by giving written notice to the PCXE. The withdrawal would become effective on the tenth business day following the PCXE's receipt of the notice. A market maker who fails to give a ten-day notice of withdrawal could be subject to formal disciplinary action pursuant to PCXE Rule 10. After a withdrawal, the ETP Holder shall would not be permitted to re-register as a market maker for a period of six months.[26]

In addition to registering as a market maker generally, a market maker also would have to register in each security in which it wishes to make a market on Arca. To become registered in a security, a market maker would have to

[8] *See* proposed PCXE Rule 1.1(jj) (definition of ''Sponsored Participant'').

[9] *See* proposed PCXE Rule 1.1(pp) (definition of ''User Agreement'').

[10] *See* proposed PCXE Rule 7.29(a).

[11] *See* proposed PCXE Rule 1.1(kk) (definition of ''Sponsoring ETP Holder''). A Sponsoring ETP Holder must be either (i) a clearing firm with membership in a clearing agency registered with the Commission that maintains facilities through which transactions may be cleared or (ii) a correspondent firm with a clearing arrangement with any such clearing firm. *Id.*

[12] *See* proposed PCXE Rule 7.29(b)(1).

[13] *See* proposed PCXE Rule 1.1(ll) (definition of ''Sponsorship Provisions'').

[14] *See* proposed PCXE Rule 7.29(b)(2).

[15] *See* proposed PCXE Rule 1.1(y) (definition of ''Notice of Consent'').

[16] *See* proposed PCXE Rule 7.29(b)(3).

[17] *See* proposed PCXE Rule 1.1(g) (definition of ''Authorized Trader'').

[18] *See* proposed PCXE Rule 7.30 (''Authorized Traders'').

[19] *See* proposed PCXE Rule 1.1(u) (definition of ''Market Maker'').

[20] The Commission notes that the proposal does not require that a market be assigned to every PCXE security traded through Arca, and thus it is possible that PCXE trades on Arca could occur without the benefit of a market maker.

[21] *See* proposed PCXE Rule 7.20(a).

[22] *See* proposed PCXE Rule 7.20(a) and& (b).

[23] *See* proposed PCXE Rule 7.20(b).

[24] *See* proposed PCXE Rule 7.20(c).

[25] *See* proposed PCXE Rule 7.20(d).

[26] *See* proposed PCXE Rule 7.20(e).

file a security registration application form with the PCXE. In determining whether to approve or disapprove the market maker's registration in a security, the PCXE may could consider: (1) The financial resources available to the market maker; (2) the market maker's experience, expertise and past performances in making markets, including the market maker's performance in other securities; (3) the market maker's operational capability; (4) the maintenance and enhancement of competition among market makers in each security in which it is registered; (5) the existence of satisfactory arrangements for clearing the market maker's transactions; and (6) the character of the market for the security (*e.g.,* price, volatility, and relative liquidity). Registration in a security will would become effective on the first business day following the PCXE's approval of the registration.[27]

Under the proposal, PCXE could terminate a market maker's registration in a security if the market maker fails to enter quotations in the security within five business days after the market maker's registration in the security becomes effective.[28] Furthermore, PCXE could suspend or terminate the market maker's registration in a security or securities whenever, in the PCXE's judgment, the interests of a fair and orderly market are best served by such action.[29]

In addition, a market maker could voluntarily terminate its registration in a security by providing PCXE with a one-day written notice. A market maker that failed to give advanced written notice of such termination could be subject to formal disciplinary action pursuant to PCXE Rule 10.[30] Finally, an ETP Holder could seek review of any action taken by the PCXE pursuant to proposed PCXE Rule 7.22 governing a market maker's registration in a security, including the denial of the application for, or the termination or suspension of, a market maker's registration in a security or securities, in accordance with PCXE Rule 10.[31]

ii. *Market Maker Authorized Traders.* Each market maker would have to apply in writing to the PCXE to register a ''Market Maker Authorized Trader'' or ''MMAT,'' [32] which is an Authorized Trader that performs market making activities on behalf of his or her market maker. An MMAT would have to be an officer, partner, employee or another associated person of a market maker, who is properly qualified to perform market making activities and has been trained and certified in the use of Arca.[33] Once registered, an MMAT could only submit orders for the account of its own market maker.[34] The PCXE may suspend or withdraw an MMAT's registration if the PCXE determines that: (1) The person has caused the market maker to fail to comply with the securities laws, rules and regulations or the Bylaws, Rules or procedures of the PCXE; (2) the person is not properly performing the responsibilities of an MMAT; (3) the person has failed to pass the Series 7 or to acquire the requisite certification and/or training, as necessary; or (4) PCXE believes it is in the interest of maintaining fair and orderly markets. If the PCXE suspended the registration of a person as an MMAT, the market maker could not allow the person to submit orders to Arca. In addition, PCXE would withdraw the registration of an MMAT upon the written request of the MMAT's market maker.[35]

iii. *Obligations of Market Makers.* Market makers electronically engage in a course of dealings for their own account to enhance liquidity available to Arca and to assist in the maintenance, insofar as reasonably practicable, of fair and orderly markets. In addition, market makers may interact with directed order flow, subject to price improvement requirements and certain obligations and duties.

Specifically, market makers would have to satisfy the following responsibilities and duties during Core Trading Hours: [36] (1) maintain continuous, two-sided Q Orders, which are limit orders submitted to Arca by a market maker, in those securities in which the market maker is registered to trade; [37]; (2) maintain adequate minimum capital in accordance with PCXE Rule 4.1; (3) remain in Good Standing [38] with the PCXE; (4) inform PCXE of any material change in financial or operational condition or in personnel; (5) clear and settle transactions through the facilities of a registered clearing agency; and (6) enter and maintain a Cleanup Order in each security in which the market maker is registered as such for each Market Order Auction.[39] If the PCXE found any substantial or continued failure by a market maker to meet the above responsibilities and duties, the PCXE could subject the market maker to disciplinary action or suspension or revoke the market maker's registration in one or more securities. In accordance with PCXE Rule 10, an ETP Holder could seek review of actions taken by the PCXE pursuant to this Rule 7.23.[40]

The market maker could apply to the PCXE to withdraw temporarily from its market maker status. This request would have to be based on a demonstrated legal or regulatory requirement that necessitates its temporary withdrawal. The PCXE would act promptly on the request and, if the request is granted, the PCXE could temporarily reassign the securities to another market maker.[41]

iv. *Odd Lot Dealers.* In addition to the market maker obligations discussed above, a market maker would have to become an Odd Lot Dealer [42] for each security in which it is registered as a market maker.[43] Furthermore, a market maker could apply to register as an Odd Lot Dealer in any other security.

Any market maker could become registered as an Odd Lot Dealer in any security by filing an odd lot registration form with the PCXE. Registration as an Odd Lot Dealer becomes effective on the first business day following the PCXE's approval of the registration. In considering the approval of the registration of the market maker as an Odd Lot Dealer in a security, the PCXE would consider such factors as financial resources, capital operations, personnel, technical resources and disciplinary history. If the PCXE denies an application to become an Odd Lot Dealer in a security or securities, the

[27] *See* proposed PCXE Rule 7.22(a).

[28] *See* proposed PCXE Rule 7.22(b).

[29] *See* proposed PCXE Rule 7.22(d).

[30] *See* proposed PCXE Rule 7.22(c).

[31] *See* proposed PCXE Rule 7.22(e). *See also* proposed PCXE Rule 10.13(a)(5).

[32] *See* proposed PCXE Rule 1.1(v) (definition of ''MMAT'').

[33] *See* proposed PCXE Rule 7.21(b). Proposed Rule PCXE 7.21(b)(2) states that, ''[t]o be eligible for registration as a MMAT, a person must successfully complete the General Securities Representative Examination (Series 7) and complete a training and certification program sponsored by the Corporation; provided, however, the requirement to complete the Series 7 Examination may be waived by the Corporation if the applicant MMAT has served as a dealer-specialist or market maker on a registered national securities exchange or association for at least two consecutive years within three years of the date of application.'' *See also* proposed PCXE Rule 7.21(b)(5) and proposed PCXE Rule 2.4(b)(10)(A).

[34] *See* proposed PCXE Rule 7.21(a).

[35] *See* proposed PCXE Rule 7.21(c).

[36] *See* proposed PCXE Rule 1.1(j) (''Core Trading Hours'' mean the hours of 6:30 a.m. through 1:00 p.m. (Pacific Time) or such other hours as may be determined by the PCXE from time to time).

[37] *See* proposed PCXE Rule 7.31(k) (definition of ''Q Order''). A Q Order may not be a Working Order.

[38] *See* proposed PCXE Rule 1.1(p) (definition of ''Good Standing'').

[39] *See* proposed PCXE Rule 7.23(a) and & (b).

[40] *See* proposed PCXE Rule 7.23(c). *See also* proposed PCXE Rule 10.13(a)(6).

[41] *See* proposed PCXE Rule 7.23(d).

[42] *See* proposed PCXE Rule 1.1(aa) (definition of ''Odd Lot Dealer'').

[43] *See* proposed PCXE Rule 7.25(b).

applicant could seek review of the decision in accordance with PCXE Rule 10.13.[44]

Once registered, an Odd Lot Dealer is obligated to: (1) Maintain an Odd Lot Tracking Order, as described in proposed PCXE Rule 7.31(g), during each day in which the PCXE is open for business for each security in which the Odd Lot Dealer is registered as such;[45] and (2) register and maintain registration as an Odd Lot Dealer in a minimum of 100 securities if the Odd Lot Dealer registers as such in any security for which it is not registered as a market maker.[46]

Under proposed PCXE Rule 7.25(d) an Odd Lot Dealer's registration in a security or securities could be suspended or terminated if: (1) The PCXE determines that the Odd Lot Dealer has substantially or continually failed to engage in dealings as required of an Odd Lot Dealer; or (2) if, in the PCXE's judgment, the interests of a fair and orderly market are best served by such action. An ETP Holder could seek review of any such termination or suspension in accordance with proposed PCXE Rule 10.[47]

Finally, an Odd Lot Dealer could voluntarily terminate its registration as such in a security or securities by providing the PCXE with a one-day written notice of such termination. An Odd Lot Dealer that fails to give advance notice of termination to the PCXE could be subject to formal disciplinary action pursuant to proposed PCXE Rule 10.[48]

v. *Limitations on Dealings.* Under the proposed rules, a market maker could: (1) Conduct an investment banking or public securities business; (2) function as a General Authorized Trader (''GAT''), *i.e.*, an Authorized Trader who performs only non-market making activities on behalf of an ETP Holder;[49] or (3) make markets in the options overlying the security in which it makes markets; (collectively, ''Other Business Activities'') or it could be affiliated with a broker-dealer that engages in Other Business Activities only if there is an Information Barrier (also commonly referred to as a Chinese Wall) between the market making activities and the Other Business Activities.[50]

An Information Barrier is an organizational structure in which the market making functions are conducted in a physical location separate from the locations in which the Other Business Activities are conducted in a manner that impedes the free flow of communications between MMATs and persons conducting the Other Business Activities. However, upon request and not on his or her own initiative, an MMAT performing the function of a market maker could furnish to persons at the same firm or an affiliated firm (''affiliated persons'') the same sort of market information that the MMAT would make available to any other person in the normal course of its market making activity. The MMAT would have to provide such information to affiliated persons in the same manner that he or she would make such information available to a non-affiliated person.[51]

Procedures would have to be implemented to prevent the use of material non-public corporate or market information in the possession of persons on one side of the barrier from influencing the conduct of persons on the other side of the barrier. The procedures, at a minimum, would have to provide that (1) The MMAT performing the function of a market maker does not take advantage of knowledge of pending transactions, order flow information, corporate information, or recommendations arising from Other Business Activities; and (2) all information pertaining to the market maker's positions and trading activities is kept confidential and not made available to persons on the other side of the Information Barrier.[52]

Although persons on one side of the barrier could not exercise influence or control over persons on the other side of the barrier, the following could occur: (1) The market making function and the Other Business Activities could be under common management as long as any general management oversight does not conflict with or compromise the market maker's responsibilities; (2) the same person or persons (the ''Supervisor'') could be responsible for the supervision of the market making and the GAT functions of the same firm or affiliated firms in order to monitor the overall risk exposure of the firm or affiliate firms. While the Supervisor could establish general trading parameters with respect to both market making and other proprietary trading other than on an order-specific basis, the Supervisor could not (1) act as either an MMAT or GAT; (2) provide to any GAT any information relating to market making activity beyond the information that an MMAT would normally provide to any other person in the course of its market making activity; or (3) provide an MMAT with specific information regarding the firm's pending transactions or order flow arising out of its GAT activities.[53]

An ETP Holder that intends to implement an Information Barrier would have to submit to the PCXE a written statement setting forth the following:

(1) The manner in which it intends to comply with the requirements of an Information Barrier (as discussed above) and the compliance and audit procedures it will implement to maintain the Barrier;

(2) The names and titles of the person(s) responsible for the maintenance and surveillance of the procedures;

(3) A commitment to provide the PCXE with such information and reports as the PCXE could request relating to its transactions;

(4) A commitment to take appropriate remedial action against any person violating this Rule or the ETP Holder's internal compliance and audit procedures and that it recognizes that the PCXE could take appropriate remedial action in the event of such a violation;

(5) Whether the ETP Holder or an affiliate intends to clear its proprietary trades, and, if so, the procedures established to ensure that information with respect to such clearing activities will not be used to compromise the Information Barrier (which procedures, at a minimum, would have to be the same as those used by the ETP Holder or the affiliate to clear for unaffiliated third parties). These procedures would have to provide that any information pertaining to market maker securities positions and trading activities, and information derived from any clearing and margin financing arrangements, could be made available only to those employees specifically authorized to have access to such information or to other employees in senior management positions who are involved in exercising general managerial oversight with respect to market making activity. Furthermore, any margin financing arrangements would have to be sufficiently flexible so as not to limit the ability of any market maker to meet market making or other obligations under the PCXE Rules; and

(6) That it recognizes that any trading by a person while in possession of material, non-public information received as a result of the breach of the internal controls could be a violation of the Act, or the rules thereunder, or PCXE Rules.[54]

After the submission of the written statement detailing the internal controls and compliance and audit procedures to PCXE, if the PCXE determines that the structure and procedures are acceptable, PCXE will inform the ETP Holder in writing of their acceptability. Absent a

[44] *See* proposed PCXE Rule 7.25(a).

[45] For a discussion of Odd Lot Tracking Orders and the execution thereof, see Section (2)(c)(iv).

[46] *See* proposed PCXE Rule 7.25(c).

[47] *See* proposed PCXE Rule 7.25(d).

[48] *See* proposed PCXE Rule 7.25(e). *See also* proposed PCXE Rule 10.13(a)(7).

[49] *See* proposed PCXE Rule 1.1(o) (definition of ''General Authorized Trader'').

[50] *See* proposed PCXE Rule 7.26(a).

[51] *See* proposed PCXE Rule 7.26(b)(1).

[52] *See* proposed PCXE Rule 7.26(b)(2).

[53] *See* proposed PCXE Rule 7.26(b)(3).

[54] *See* proposed PCXE Rule 7.26(c).

finding that an ETP Holder's Information Barrier procedures are acceptable, a market maker could not conduct Other Business Activities.[55]

Finally, an ETP Holder or an affiliate of the ETP Holder could clear the ETP Holder's market maker transactions if it establishes procedures to ensure that information with respect to clearing activities would not be used to compromise the Information Barrier. In this regard, the procedures would have to provide that any information pertaining to market maker securities positions and trading activities, and information derived from any clearing and margin financing arrangements, could be made available only to those employees (other than employees actually performing clearing and margin functions) specifically authorized to have access to such information or to other employees in senior management positions who are involved in exercising general managerial oversight with respect to the market making activity. Furthermore, any margin financing arrangements would have to be sufficiently flexible so as not to limit the ability of any market maker to meet market making or other obligations under the PCXE Rules.[56]

c. *Trading on the Archipelago Exchange.* i. *Order Entry*—Users would enter into Arca the following standard types of orders: Market orders, limit orders, Day Orders, Good-Til-Canceled (GTC) Orders, Immediate-or-Cancel Orders, Stop Orders, Stop Limit Orders, Do Not Reduce, Do Not Increase, and Timed Orders.[57]

In addition, Users could utilize Working Orders, which are defined to include ''any order with a conditional or undisplayed price and/or size designated as a 'Working Order,' '' including All-or-None, Discretionary, and Reserve Orders.[58] An All-or-None Order is a limit order which is to be executed in its entirety or not at all.[59] A Discretionary Order is an order to buy or sell a stated amount of a security at a specified, undisplayed price (the ''discretionary price''), in addition to at a specified, displayed price (''displayed price'').[60] For example, a User could submit a Discretionary Order to buy 5000 shares of XYZ at 20, with discretion to 20.25. In that case, the User represents a displayed price of 20, but the User is willing to buy the 5000 shares at a price up to the discretionary price of 20.25. A Reserve Order is a limit order with a portion of the size displayed and with a reserve portion of the size (''reserve size'') that is not displayed on the Arca book.[61] For example, a User could submit a Reserve Order to buy 5000 shares of XYZ at 20 with a request that 1000 shares be displayed. Therefore, the 1000 shares are displayed and 4000 shares, as the reserve size, are not displayed.

Arca would also accept NOW Orders.[62] A NOW Order is a Limited Price Order[63] that is to be executed in whole or in part on Arca, and the portion not so executed would be routed pursuant to Rule 7.37(d) only to one or more NOW Recipients for immediate execution as soon as the order is received by the NOW Recipient. Any portion not immediately executed by the NOW Recipient would be cancelled. If a NOW Order is not marketable when it is submitted to the PCXE, it would be cancelled. NOW Orders cannot be Directed Orders.[64] For the purposes of a NOW Order, a NOW Recipient means any exchange, ECN, or other broker-dealer (1) with which Arca maintains an electronic linkage, which includes ITS, and (2) which provides instantaneous responses to NOW Orders routed from Arca. The PCXE would designate from time to time those exchanges, ECNs, or other broker-dealers that qualify as NOW Recipients.[66] An Auction-Only Limit Order, which is a limit order that could be executed only during the Market Order Auction, would also be submitted to Arca.[67] In addition, Users could submit Primary Only Orders (''PO Orders'') which are market orders, for exchange-listed securities only, that are to be routed as a market-on-open order to the primary market for participation in the primary market opening process. A PO Order would have to be entered before 6:28 a.m. (Pacific Time) and it would not be included in the Market Order Auction.

Furthermore, as discussed in more detail in other sections, Users could submit Tracking Orders, Odd Lot Tracking Orders, Directed Orders, Directed Fills, Q Orders, Fill-or-Return Orders, Fill-or-Return Plus Orders, PNP Orders, Cross Orders and Cleanup Orders as well.[68]

Finally, as a general matter, consistent with proposed PCXE Rules, ETP Holder Users of Arca could enter both proprietary orders and agency orders for the account of a customer. Proprietary orders entered into Arca are subject to the same display and execution processes as agency orders. An ETP Holder User that enters a proprietary order into Arca would mark the order with the appropriate designator to identify the order as proprietary.[69]

ii. *Order Ranking and Display.* Arca would maintain an electronic file of orders, called the Arca Book, which contains all the User's orders in the four components, called Processes, of the Arca Book.[70] Specifically, the Arca Book contains the Directed Order, Display Order, Working Order, and Tracking Order Processes.[71] Limited Price Orders of Users submitted to Arca (other than such orders as Directed Fills and Tracking Orders) would be ranked and maintained in the Display Order Process and/or Working Order Process of the Arca Book according to price-time priority, such that within each price level, all orders would be organized by the time of entry, as discussed in more detail below.

The displayed portion of orders are ranked in the Display Order Process. One category of orders—limit orders, with no other conditions—would be ranked in the Display Order Process based on the specified limit price and the time of original order entry. With regard to Reserve Orders, the displayed portion of Reserve Orders (not the reserve size) would be ranked in the Display Order Process at the specified limit price and the time of order entry. If the displayed portion of the Reserve Order is decremented in its entirety, the displayed portion of the Reserve Order would be refreshed for the displayed amount from the reserve portion and would be submitted and ranked at the specified limit price and the new time that the displayed portion of the order was refreshed. Finally, Discretionary Orders would be ranked in the Display Order Process based on the displayed price (not the discretionary price) and the time of order entry. If a Discretionary Order is decremented, it remains ranked based on the displayed price and the time of original order entry.

[55] *See* proposed PCXE Rule 7.26(d).

[56] *See* proposed PCXE Rule 7.26(e).

[57] *See generally* proposed PCXE Rule 7.31.

[58] *See* proposed PCXE Rule 7.31(h).

[59] *See* proposed PCXE Rule 7.31(h)(1).

[60] *See* proposed PCXE Rule 7.31(h)(2).

[61] *See* proposed PCXE Rule 7.31(h)(3).

[62] *See* proposed PCXE Rule 7.31(v).

[63] *See* proposed PCXE Rule 1.1(s) (''Limited Price Order'' is defined as any order with a specified price or prices (*e.g.,* limit orders and Working Orders), other than Stop Orders).

[64] *See* proposed Rule 7.31(i) (definition of ''Directed Order'').

[66] *See* proposed PCXE Rule 1.1(z) (definition of ''NOW Recipient'').

[67] *See* proposed PCXE Rule 7.31(t). *See* Section 2(c)(vii) for a discussion of the Auction-Only Limit Orders role in the Market Order Auction.

[68] *See generally* proposed PCXE Rule 7.31.

[69] *See* proposed PCXE Rule 7.33.

[70] *See* proposed PCXE Rule 1.1(a) (definition of ''Arca Book'').

[71] See proposed PCXE Rule 1.1(a) (definition of ''Arca Book'').

Only All-or-None Orders and the undisplayed portion of Reserve Orders and Discretionary Orders are ranked in the Working Order Process. The reserve portion of Reserve Orders would be ranked in the Working Order Process based on the specified limit price and the time of original order entry. After the displayed portion of a Reserve Order is refreshed from the reserve portion, the reserve portion remains ranked based on the original time of order entry, while the displayed portion is sent to the Display Order Process with a new time-stamp. Discretionary Orders would be ranked in the Working Order Process based on the displayed price and the time of original order entry. After a Discretionary Order is decremented, it remains ranked as described above. All-or-None Orders would be ranked in the Working Order Process based on the specified limit price and the time of order entry.

PCXE offers the following example to clarify how orders are ranked in the Display and Working Order Processes. Suppose that the following orders are submitted to Arca by Users:

10:00 a.m.—Order A—Limit order to buy 1000 XYZ at 20
10:01 a.m.—Order B—Reserve Order to buy 5000 XYZ at 20 (show 1000)
10:02 a.m.—Order C—Limit order to buy 500 XYZ at 20
10:03 a.m.—Order D—Discretionary Order to buy 5000 XYZ at 20 (discretion to 20.25)
10:04 a.m.—Order E—All-or-None to buy 1500 XYZ at 20
10:05 a.m.—Order F—Q Order to buy 1000 XYZ at 20
10:06 a.m.—Order G—Limit order to buy 700 XYZ at 20
10:07 a.m.—Order H—Q Order to buy 500 XYZ at 20
10:08 a.m.—Order I—Discretionary Order to buy 10,000 XYZ at 20 (discretion to 20.25)

Orders A–H would be ranked in the Arca Book as follows: In the Display Order Process, the orders would be ranked in the following order: (1) Order A; (2) Order B1 (the displayed 1000 shares of Order B); (3) Order C; (4) Order D1 (the displayed price of 20 for Order D); (5) Order F; (6) Order G; (7) Order H; and (8) Order I1 (the displayed price of 20 for Order I). In the Working Order Process, the orders would be ranked in the following order: (1) Order B2 (4000 shares of the reserve portion of Order B); (2) Order D2 (the discretionary price up to 20.25 for Order D); (3) Order E; and (4) Order I2 (the discretionary price up to 20.25 for Order I).

iii. *Order Display and Dissemination.* Arca would operate the Arca Book on an open basis. All orders at all price levels in the Display Order Process of the Arca Book would be displayed to all Users on an anonymous basis. In addition, the same information would be made available to other interested parties.[72] Furthermore, the best-ranked displayed order(s) to buy and sell in the Arca Book and the corresponding aggregate size of such orders associated with such prices would be collected and made available to quotation vendors for dissemination pursuant to the requirements of Rule 11Ac1–1 [73] under the Act.[74]

iv. *Order Execution.* Subject to the restrictions on short sales under Rule 10a-1 under the Exchange Act,[75] like-priced orders, bids and offers would be matched for execution by following Steps 1 through 5, as described below; provided, however, that for an execution to occur in any Order Process the price would have to be equal to or better than the NBBO,[76] unless Arca has routed orders to all away markets at the NBBO:

*Step 1: Directed Order Process.* The first step of the Arca execution algorithm is the Directed Order Process. Through this process, Users could direct an order to a market maker with whom they have a relationship and the market maker would execute the order. To access this process, the User would have to submit a Directed Order, which is a market or limit order to buy or sell which has been directed to a particular market maker by the User.[77] Any type of order other than a Directed Order would skip the Directed Order Process and immediately enter Step 2, the Display Order Process. The Directed Order Process is available only during Core Trading Hours.[78]

In the Directed Order Process, the User's Directed Order would be executed against a Directed Fill, which is the order of the User's designated market maker. Specifically, any market maker could submit a standing instruction to Arca for the parameters of a Directed Fill, including, but not limited to, the size of the order, the Users that could send such market maker a Directed Order, the price improvement algorithm, and the period of time the instruction is effective. The market maker's Directed Fill described in the instruction would be generated only in response to a Directed Order directed to such market maker. The Directed Fill is a limit order with a size that is equal to or less than the size of the Directed Order and a price that improves the BBO[79] by an automatically preset amount, which would have to be equal to or greater than the Minimum Price Improvement Increment,[80] pursuant to a price improvement algorithm; provided, however, that the Directed Fill would not be generated if the price is not equal to or better than the NBBO. In other words, a market maker may not execute against a Directed Order without improving the best price on the Arca Book. A market maker may modify the parameters of the instruction for a Directed Fill from time to time, as the PCXE permits.[81]

If a User submits a marketable [82] Directed Order to Arca and the User's designated market maker has a standing instruction for a Directed Fill, the Directed Order would be executed against the Directed Fill of the designated market maker. If a User submits a marketable Directed Order and the User's designated market maker has not submitted an instruction for a Directed Fill, or if a User submits any order other than a marketable Directed Order, the Directed Order would enter the Display Order Process without interacting with any Directed Fills.[83]

*Step 2: Display Order Process.* If an incoming marketable order has not been executed in its entirety in the Directed Order Process, any remaining part of the order would be routed to the Display Order Process, Step 2 of the execution algorithm.[84] In the Display Order Process, Arca would match an incoming marketable order against orders in the Display Order Process at the display price of the resident order for the total size available at that price or for the size of the incoming order, whichever is smaller. For the purposes of the Display Order Process, the size of an incoming Reserve Order includes the displayed and reserve size and the size of the portion of the Reserve Order resident in the Display Order Process is equal to its displayed size. If the incoming marketable order has not been executed in its entirety, the remaining part of the

[72] See proposed PCXE Rule 7.36(b).

[73] 17 CFR 240.11Ac1–1.

[74] See proposed PCXE Rule 7.36(c).

[75] 17 CFR 240.10a–1.

[76] *See* proposed PCXE Rule 1.1(x) (the term ''NBBO'' refers to the national best bid or offer).

[77] *See* proposed PCXE Rule 7.31(i) (definition of ''Directed Order'').

[78] *See* proposed PCXE Rule 7.37(a).

[79] *See* proposed PCXE Rule 1.1(h) (the term ''BBO'' refers to the best bid or offer on Arca).

[80] *See* proposed PCXE Rule 7.6, Commentary .06.

[81] *See* proposed PCXE Rule 7.31(j) (definition of ''Directed Fill'').

[82] *See* proposed PCXE Rule 1.1(t) (''Marketable'' means, for a Limited Price Order, the matches or price crosses the NBBO on the other side of the market. Market orders are always considered marketable.).

[83] *See* proposed PCXE Rule 7.37(a).

[84] *See* proposed PCXE Rule 7.37(b).

order would be routed to the Working Order Process.[85]

An incoming order that is not marketable would skip the Display Order Process and enter the Working Order Process to be executed against any Discretionary Orders at or better than the NBBO.[86]

*Step 3: Working Order Process.* An incoming marketable order would be matched for execution against orders in the Working Order Process in the following manner: An incoming marketable order would be matched against orders within the Working Order Process in the order of their ranking, at the price of the displayed portion (or in the case of an All-or-None Order, at the limit price), for the total amount of stock available at that price or for the size of the incoming order, whichever is smaller. If the BBO is outside the NBBO and any Discretionary Orders within the Working Order Process have a discretionary price equal to or better than the NBBO, the incoming order would execute against such Discretionary Order(s) at the NBBO up to the size of the smaller of the two orders. If an incoming marketable order is a Discretionary Order or a Reserve Order and its prices overlap with the prices of a Discretionary Order(s) in the Working Order Process, then the orders would be executed at the display price of the order that was entered first up to the size of the smaller of the two orders. For the purposes of this subsection, the size of the incoming Reserve Order includes the displayed and reserve size. If the incoming marketable order has not been executed in its entirety, the remaining part of the order would be routed to the Tracking Order Process.[87]

An incoming order that is not marketable would be matched for execution against orders in the Working Order Process in the following manner: The incoming order would be matched against any Discretionary Orders in the Working Order Process that have discretionary prices that would satisfy an otherwise displayable incoming Limited Price Order. The execution would occur at the limited price of the incoming order. If the incoming order is a Discretionary Order and its prices overlap with the prices of a Discretionary Order in the Working Order Process, then the orders would be executed at the discretionary price of the incoming order that would be the best price available for the order entered first. If any change in the NBBO or other available away trading interest would cause a potential match between the away order and an order in the Working Order Process, a commitment to trade would be sent to that market center or market participant[88] pursuant to Step 5 below.[89]

*Step 4: Tracking Order Process.* During Core Trading Hours only, the fourth step of the execution algorithm is the Tracking Order Process. If an order has not been executed in its entirety in the Directed, Display, or Working Order Processes, Arca then would match and execute any remaining part of the order in the Tracking Order Process, unless the order or portion thereof was received from another market center or market participant, in which case it would be cancelled immediately.[90]

If the unfilled order or portion of an order that enters the Tracking Order Process is a mixed lot or round lot order, Arca would match the order against any Tracking Orders.[91] Any User could submit an instruction to Arca for the parameters of a Tracking Order at any time during the day, where such parameters include: (1) the maximum aggregate size, which is the aggregate size of all partial orders generated in the Tracking Order Process for a particular security that the User is willing to trade on that day; (2) the maximum tradeable size, which is the maximum size of any partial order generated in response to an order entering the Tracking Order Process that the User is willing to trade on that day; (3) the price in relation to the NBBO; and (4) the relevant security. Once a User has submitted an instruction for the parameters of the Tracking Order, the instruction would remain in effect until closing or until the User has traded its maximum aggregate size for that day, whichever comes first.[92]

Users who have submitted an instruction for the parameters of a Tracking Order would be assigned trades on a price/time rotating basis, such that within each price level, trades would be assigned by the time the Users' instructions are received by Arca. Within each price level, the first User to send an instruction for a Tracking Order would be the first User to be assigned a trade in the rotation process. For each order that enters the Tracking Order Process, the Tracking Order Process would rotate once through the Users in the rotation pattern. In each rotation, the User would be responsible for one trade up to the User's maximum tradeable size.

The order described in the User's Tracking Order instruction would be generated only if an unfilled round or mixed lot order enters the Tracking Order Process and it is such User's turn as determined by the Tracking Order Process rotation pattern.

Each partial order generated in a rotation is a limit order in which (1) the price is set at or better than the NBBO at the time the unfilled order enters the Tracking Order Process, based on the User's parameters; and (2) the size is (i) equal to the User's maximum tradeable size if the unfilled order is equal to or larger than the maximum tradeable size; or (ii) equal to the size of the unfilled order if the unfilled order is smaller than the maximum tradeable size. A User could modify the parameters of the instruction for the Tracking Order from time to time, as the PCXE permits.

After the order has been matched against any Tracking Orders, if the order has not been executed in its entirety and the remaining part of the order is an odd lot, the odd lot order would be executed in the Odd Lot Tracking Order Process, as described below. Otherwise the order would be routed pursuant to the final step of the execution algorithm.

If the unfilled order or portion of an order that enters the Tracking Order Process is an odd lot, Arca would match the order against any Odd Lot Tracking Orders[93] (''OLTOs''), using the same rotation process described above with regard to Tracking Orders.[94] An OLTO, which could only be submitted to Arca by a registered Odd Lot Dealer, is a Tracking Order in which: (1) the maximum aggregate size is unlimited; (2) the maximum tradeable size is 99 shares; (3) the price is set at the NBBO; (4) the security is one in which the Odd Lot Dealer is registered as such; and (5) the instruction would have to be in effect for the duration of Core Trading Hours. The order described in the instruction would be generated only if an unfilled odd lot market order enters the Odd Lot Tracking Order Process or an odd lot limit order causes a locked market as described in proposed PCXE Rule 7.56.

Whenever in the judgment of the PCXE, because of an influx of orders, a system malfunction, or other unusual conditions or circumstances, the interests of a fair and orderly market so

[85] *See* proposed PCXE Rule 7.37(b)(1).

[86] *See* proposed PCXE Rule 7.37(b)(2).

[87] *See* proposed PCXE Rule 7.37(b)(2)(A).

[88] *See* proposed PCXE Rule 1.1(w) (''Market Participant'' includes ECNs, dealer-specialists registered with a national securities exchange and market makers registered with a national securities association).

[89] *See* proposed PCXE Rule 7.37(b)(2)(B).

[90] *See* proposed PCXE Rule 7.37(c).

[91] *See* proposed PCXE Rule 7.37(c)(1).

[92] *See* proposed PCXE Rule 7.31(f) (definition of ''Tracking Order'').

[93] *See* proposed PCXE Rule 7.31(g) (definition of ''OLTO'').

[94] *See* proposed PCXE Rule 7.37(c)(2).

require, the PCXE could suspend the Tracking Order Process. If the PCXE suspends the Tracking Order Process, the Process would become operational again when the PCXE determines that the conditions supporting the suspension no longer exist.[95]

*Step 5: Routing.* The fifth step of the Arca execution algorithm, which involves routing orders away to other market centers or market participants, is available only to those ETP Holders who have entered into a Routing Agreement. A Routing Agreement is an agreement between an ETP Holder and a broker-dealer affiliate of Archipelago Exchange, L.L.C., under which the broker-dealer affiliate agrees to act as agent for routing orders of the ETP Holder and the ETP Holder's Sponsored Participants to other market centers or broker-dealers for execution, whenever routing is required.[96]

For those ETP Holders that are parties to a Routing Agreement and indicate that they wish the order to be routed away, if necessary, if the order has not been executed in its entirety pursuant to the other Order Processes, the order would be routed to another market center or market participant as follows:[97] Arca would route the order to another market center or market participant as a limit order priced at the quote published by the market center or market participant. Arca would attempt to match the part of the order that has not been routed away against then available trading interest in the Arca Book for an internal fill by following Steps 1 through 4 again.

Orders routed to other market centers or market participants would remain outside Arca for a prescribed time period during which such orders could be executed (in whole or in part) or declined. While an order remains outside Arca, it would have no time standing relative to other orders received from Users at the same price which could be executed against the Arca Book. Requests from Users to cancel their orders while the order is routed away to another market center or market participant and remains outside Arca would be processed, subject to applicable trading rules of the relevant market center or market participant.

In the event that a marketable order routed from Arca to another market center or market participant is not executed in its entirety at the other market center or market participant's quote (*i.e.*, all attempts to fill the order are declined or timed-out), Arca would attempt to match the residual or declined market order against then available trading interest in the Arca Book for an internal fill by following Steps 1 through 4 above. Any remaining unmatched trading interest would be re-routed to another market center or market participant at the next available displayed price level.

When routing an order away to another market center, the PCXE would utilize such electronic intermarket linkages and order delivery facilities as could be approved by the Board of Directors from time to time, subject to such applicable requirements as could be agreed to with the relevant market center.

Under the proposal, if an ETP Holder has not entered into a Routing Agreement, the ETP Holder and its Sponsored Participants could submit to Arca only Fill-or-Return, Fill-or-Return Plus, or PNP Orders, which are orders that could not be routed outside of Arca.[98] Specifically, a Fill-or-Return Order is an order to buy or sell that is to be executed in whole or in part on the PCXE, and any portion not executed on the PCXE is to be cancelled, without routing the order to another market center or market participant.[99] Similarly, a Fill-or-Return Plus Order is a Fill-or-Return Order, except, in the event any portion of the order is not executed on the PCXE and would have to be cancelled, Arca, after canceling the unexecuted portion of the order, would send an administrative message to an ETP Holder designated by the order entry ETP Holder informing the designated ETP Holder that a portion of the order was cancelled.[100] A Post No Preference (''PNP'') Order is a limit order to buy or sell that is to be executed in whole or in part on the PCXE, and the portion not so executed is to be ranked in the Arca Book, without routing any portion of the order to another market center. However, the PCXE would cancel a PNP Order that would lock or cross the NBBO.[101] Therefore, if an order has not been executed in its entirety pursuant to the other Order Processes and it has been designated as a Fill-or-Return, Fill-or-Return Plus Order, or a PNP Order, the order would be cancelled at the routing step, without routing the order away from Arca.[102]

Finally, if an order has not been executed in its entirety after following Steps 1—5, the order would be ranked in the Arca Book pursuant to Rule 7.36.[103]

*Examples.* The following examples clarify the order execution process for the Arca Book. Assuming PCXE has the orders in the Arca Book as specified in the ranking example above (*see* Section 2(c)(ii)), suppose an incoming order, which is not a Directed Order and therefore bypasses the Directed Order Process, enters Arca:

Example 1. Suppose the incoming order is a market order to sell 1000 shares of XYZ. The market order would execute against Order A, filling both Order A and the incoming order for 1000 shares at the price of 20.

Example 2. Suppose the incoming order is a market order to sell 5000 shares of XYZ.

(1) The incoming order would execute against Order A, filling Order A and executing 1000 shares of the incoming order at 20.

(2) Next, 1000 shares of the incoming order would execute against the 1000 displayed shares of Order B1 at 20, without affecting the 4000 undisplayed shares of Order B2 in the Working Order Process.

(3) Third, the incoming order would execute against Order C, filling both Order C and executing 500 shares of the incoming order at 20.

(4) Finally, the remaining 2500 shares of the incoming order would execute against 2500 shares of D1 at 20, completing the incoming order.

Example 3. Suppose the incoming order is a market order to sell 25,200 shares of XYZ.

(1) The incoming order would execute against Orders A, B1, and C in the same manner as in Example 3.

(2) Then, the incoming order would execute against Order D1 for 5000 shares at 20, filling Order D.

(3) Next, the incoming order would execute against Order F for 1000 shares at 20, thereby filling Order F.

(4) The incoming order then would execute against Order G for 700 shares at 20, thereby filling Order G.

(5) Then, the incoming order would execute against Order H for 5000 shares at 20, thereby filling Order H.

(6) Then, the incoming order would execute against Order I1 for 10,000 shares at 20, thereby filling Order I.

(7) Then, because the incoming order has exhausted orders in the Display Order Process and has not been filled in its entirety, it enters the Working Order Process. First, the incoming order is

[95] *See* proposed PCXE Rule 7.31(f)(7).

[96] *See* proposed PCXE Rule 1.1(gg) (definition of ''Routing Agreement'').

[97] *See* proposed PCXE Rule 7.37(d)(2).

[98] *See* proposed PCXE Rule 7.32.

[99] *See* proposed PCXE Rule 7.31(p) (definition of ''Fill-or-Return'').

[100] *See* proposed PCXE Rule 7.31(r) (definition of ''Fill-or-Return Plus'').

[101] *See* proposed PCXE 7.31(w).

[102] *See* proposed PCXE Rule 7.37(d)(1).

[103] *See* proposed PCXE Rule 7.37(e).

executed against the 4000 shares of reserve size for Order B2. This fills the balance of Order B.

(8) The incoming order does not interact with Order D2 in the Working Order Process because Order D was filled in the Display Order Process.

(9) The incoming order then executes against the 1500 shares of Order E at 20, thereby filling both Order E and the incoming order.

Example 4. Suppose the incoming order is a market order to sell 25,300 shares of XYZ. The order would be executed as described in Example 3, paragraphs (1)–(9). The remaining 100 shares would be routed to the Tracking Order Process, where they would be executed against Tracking Order(s), if any.

Example 5. Suppose the incoming order is a market order to sell 25,250 shares of XYZ. The order would be executed as described in Example 3, paragraphs (1)–(9). The remaining 50 shares would be routed to the Tracking Order Process, where they would be executed against Odd Lot Tracking Order(s), if any.

v. *Crosses.* Arca permits the execution of a Cross Order, which is defined as a two-sided order with instructions to match the identified buy-side with the identified sell-side at a specified price (the ''cross price''), subject to price improvement requirements described below.[104] A Cross Order would be executed as follows; provided, however, no Cross Orders would be matched at the cross price without interacting with any orders in the Arca Book unless the cross price improves the BBO by the Minimum Price Improvement Increment.[105]

(1) If the cross price is equal to or better than the NBBO and is between the BBO, the orders could be crossed without interacting with any other orders.

(2) If the cross price is equal to or better than the NBBO and is at the BBO, the remainder of the Cross Order could be crossed, after any relevant portion is matched against any displayed orders with priority in the Arca Book.

(3) If the cross price is outside the NBBO and is between the BBO, the remainder of the Cross Order could be crossed, after the relevant portion is routed away to other markets for execution.

(4) If the cross price is outside the NBBO and is at the BBO, the remainder of the Cross Order could be crossed, after any relevant portion is first routed away to other markets for execution and then any relevant portion is matched against any displayed orders with priority in the Arca Book.

(5) If the cross price is outside the NBBO and the BBO and the NBBO is better than the BBO, the relevant portion of the order first would be routed away to other markets for execution. Then, the Cross Order would be matched at the displayed price (if the Cross Order is smaller than block size[106]) or at the cross price (if the Cross Order is of block size) against displayed orders with priority in the Arca Book. Then, the Cross Order would be matched at the price at which the Working Order is represented in the Book against all Working Orders with priority. Finally, any remainder of the Cross Order would be matched at the cross price.

(6) If the cross price is outside the NBBO and the BBO and the NBBO equals the BBO, then the Cross Order first would be matched at the displayed price (if the Cross Order is smaller than block size) or at the cross price (if the Cross Order is of block size) against displayed orders with priority in the Arca Book. Then, the Cross Order would be matched at the price at which the Working Order is represented in the Book against all Working Orders with priority. Then, the relevant portion of the order would be routed away to other markets for execution. Finally, any remainder of the Cross Order would be matched at the cross price.

vi. *Trading Sessions.* Arca would have three trading sessions each day the PCXE is open for business: the Opening Session, the Core Trading Session and the Late Trading Session. The Opening Session begins at 5:00 a.m. (Pacific Time) and concludes at the commencement of the Core Trading Session. The Opening Auction and the Market Order Auction[107] would occur during the Opening Session. The Core Trading Session begins for each security at 6:30 a.m. (Pacific Time) or at the conclusion of the Market Order Auction, whichever comes later, and concludes at 1:00 p.m. (Pacific Time). Finally, the Late Trading Session begins after the conclusion of the Core Trading Session and concludes at 5:00 p.m. (Pacific Time).[108]

During the Core Trading Session, market makers would be obligated to enter Q Orders in securities in which they are registered by the time Core Trading Hours begin. During the Opening Session and the Late Trading Session, market makers are not obligated to enter Q Orders in securities in which they are registered. Market makers are required to enter at least one Cleanup Order for all securities in which they are registered for each Market Order Auction.[109]

Any Day Order entered into Arca could remain in effect for one or more consecutive trading sessions on a particular day. For each Day Order entered into Arca, the User would have to designate for which trading session(s) the order would remain in effect. Any GTC Order entered into Arca would remain in effect only during Core Trading Sessions, unless the User indicates that the GTC Order would remain in effect for the Opening and/or Late Trading Sessions.[110]

For each trading session, some order types are eligible to be executed and others are not eligible to be executed. During the Opening Session, orders eligible for the Display Order Process (other than Q Orders) and for the Working Order Process that have been designated as available for the Opening Session are eligible for entry into and execution on Arca. Stop Orders are not eligible for execution during the Opening Session. Users could enter market and Auction Only Limit Orders for inclusion in the Market Order Auction. Market orders and Auction Only Limit Orders are not eligible for execution during the Opening Session, except during the Market Order Auction. Neither the Directed Order Process nor the Tracking Order Process is available during the Opening Session. For the purposes of the Opening Session, market Directed Orders are eligible for execution in the Market Order Auction. NOW Orders are eligible for execution during the Opening Session; however, NOW Orders are not eligible for the Opening Auction or the Market Order Auction. PNP Orders are eligible for execution during the Opening Session.[111]

During the Core Trading Session, market orders, Stop Orders, NOW Orders, PNP Orders and orders eligible for the Directed Order, Display Order, Working Order, and Tracking Order Processes are eligible for entry into and execution on Arca.[112]

[104] *See* proposed PCXE Rule 7.31(s) (definition of a ''Cross Order'').

[105] For a description of the Minimum Price Improvement Increment, *see* proposed PCXE Rule 7.6(a), Commentary .06.

[106] For the purposes of a Cross Order, an order of block size would have the same meaning as set forth in proposed PCXE Rule 7.57 regarding ITS. *See* proposed PCXE Rule 7.31(s).

[107] For a discussion of the Opening Auction and the Market Order Auction, *see Section 2(c)(vii).*

[108] *See* proposed PCXE Rule 7.34(a).

[109] *See* proposed PCXE Rule 7.34(b).

[110] *See* proposed PCXE Rule 7.34(c).

[111] *See* proposed PCXE Rule 7.34(d)(1).

[112] *See* proposed PCXE Rule 7.34(d)(2).

During the Late Trading Session, orders eligible for the Display Order Process (other than Q Orders) and for the Working Order Process, including NOW Orders and PNP Orders, that have been designated as available for the Late Trading Session are eligible for entry into and execution on Arca. Market orders and Stop Orders are not eligible for execution during the Late Trading Session. The Directed Order Process and Tracking Order Process are not available during the Late Trading Session.[113]

Because Arca would operate the Opening and Late Trading Sessions outside of traditional trading hours, the PCXE requires certain customer disclosures.[114] In particular, no ETP Holder could accept an order from a non-ETP Holder for execution in the Opening or Late Trading Session without disclosing to such non-ETP Holder that:

(1) Except for market orders eligible for execution during the Market Order Auction, Limited Price Orders are the only orders that are eligible for execution during the Opening and Late Trading Sessions;

(2) An order would have to be designated specifically for trading in the Opening and/or Late Trading Session to be eligible for trading in the Opening and/or Late Trading Session; and

(3) Extended hours trading involves material trading risks, including the possibility of lower liquidity, high volatility, changing prices, unlinked markets, an exaggerated effect from news announcements, wider spreads and any other relevant risk. The disclosures required pursuant to this paragraph could take the following form or such other form as provides substantially similar information:

1. *Risk of Lower Liquidity.* Liquidity refers to the ability of market participants to buy and sell securities. Generally, the more orders that are available in a market, the greater the liquidity. Liquidity is important because with greater liquidity it is easier for investors to buy or sell securities, and as a result, investors are more likely to pay or receive a competitive price for securities purchased or sold. There may be lower liquidity in extended hours trading as compared to regular market hours. As a result, your order may only be partially executed, or not at all.

2. *Risk of Higher Volatility.* Volatility refers to the changes in price that securities undergo when trading. Generally, the higher the volatility of a security, the greater its price swings. There may be greater volatility in extended hours trading than in regular market hours. As a result, your order may only be partially executed, or not at all, or you may receive an inferior price in extended hours trading than you would during regular markets hours.

3. *Risk of Changing Prices.* The prices of securities traded in extended hours trading may not reflect the prices either at the end of regular market hours, or upon the opening of the next morning. As a result, you may receive an inferior price in extended hours trading than you would during regular market hours.

4. *Risk of Unlinked Markets.* Depending on the extended hours trading system or the time of day, the prices displayed on a particular extended hours system may not reflect the prices in other concurrently operating extended hours trading systems dealing in the same securities. Accordingly, you may receive an inferior price in one extended hours trading system than you would in another extended hours trading system.

5. *Risk of News Announcements.* Normally, issuers make news announcements that may affect the price of their securities after regular market hours. Similarly, important financial information is frequently announced outside of regular market hours. In extended hours trading, these announcements may occur during trading, and if combined with lower liquidity and higher volatility, may cause an exaggerated and unsustainable effect on the price of a security.

6. *Risk of Wider Spreads.* The spread refers to the difference in price between what you can buy a security for and what you can sell it for. Lower liquidity and higher volatility in extended hours trading may result in wider than normal spreads for a particular security.

Finally, trades on Arca executed and reported outside of the Core Trading Session would have to be designated as .T trades.[115]

vii. *Opening Session Auctions. Definitions.* Arca would operate two auctions during its Opening Session—the Opening Auction and the Market Order Auction. In preparation for a description of these two auctions, PCXE would define several new terms applicable to the auctions.

First, for the purposes of the Opening Auction and the Market Order Auction, PCXE proposes to define the term ''Indicative Match Price'' to mean ''for each security'' (1) the price at which the maximum volume of orders are executable; or (2) if there are two or more prices at which the maximum volume of orders are executable, the price that is closest to the closing price of the previous trading day's normal market hours, as determined by the Consolidated Tape.''[116]

In addition, the PCXE defines the term ''Imbalance'' as the number of buy or sell shares orders that can not be matched with other orders at the Indicative Match Price at any given time.[117]

Finally, the PCXE introduces the Cleanup Order for the Market Order Auction.[118] Cleanup Orders (1) could be submitted only by Market makers; (2) would have to be submitted to Arca before 6:15 a.m. (Pacific Time) and remain in effect until the conclusion of the Market Order Auction; (3) would have to be 2500 shares in size; (4) would have to be entered as both buy or sell orders, provided, however, the Cleanup Order could be executed only on the side of the market opposite the Imbalance; (5) would be executed at the Indicative Match Price as of the time of the Market Order Auction; and (6) would be executed only if: (i) there was an Imbalance of eligible orders at the conclusion of the Market Order Auction, as provided in proposed PCXE Rule 7.35; and (ii) the Imbalance is less than or equal to aggregate size of all Cleanup Orders in the relevant security. If there is an Imbalance and Cleanup Orders would be executed, the market orders which make up the Imbalance would be divided equally among, and allocated to, all Market makers registered in the relevant security and executed against such market makers' Cleanup Orders. If no Imbalance exists at the time of the Market Order Auction, all Cleanup Orders would be cancelled at that time.

*Order Entry and Cancellation Before the Opening Auction.*[119] Users could submit any orders to Arca beginning at 4:30 a.m. (Pacific Time). Any such Limited Price Orders designated for the Opening Session would be queued until 5:00 a.m. (Pacific Time) at which time they would be eligible to be executed pursuant to the Opening Auction. Any such market orders would be queued until the Market Order Auction at which time they would be executed pursuant to the Market Order Auction.

Only Limited Priced Orders designated for the Opening Session would be eligible for the Opening Auction. Market orders entered before the Opening Auction would participate

[113] *See* proposed PCXE Rule 7.34(d)(3).

[114] *See* proposed PCXE Rule 7.34(e).

[115] *See* proposed PCXE Rule 7.34(f).

[116] *See* proposed PCXE Rule 1.1(r) (definition of ''Indicative Match Price'').

[117] *See* proposed PCXE Rule 1.1(q) (definition of ''Imbalance'').

[118] *See* proposed PCXE Rule 7.31(u) (definition of ''Cleanup Order'').

[119] *See* proposed PCXE Rule 7.35(a).

in the Market Order Auction. Limited Price Orders not designated for the Opening Session would become eligible for execution pursuant to Rule 7.37 at the commencement of the Core Trading Session.

Beginning at 4:30 a.m. (Pacific Time), and various times thereafter as determined from time to time by the PCXE, the Indicative Match Price of the Opening Auction, and any Imbalance associated therewith, would be published via electronic means as determined from time to time by the PCXE. Orders that are eligible for the Opening Auction could not be cancelled between 4:58 a.m. (Pacific Time) and the conclusion of the Opening Auction.

*Opening Auction.* At 5:00 a.m. (Pacific Time), Limited Price Orders designated for the Opening Session are matched and executed in the Opening Auction. The orders in the Opening Auction would be executed at the Indicative Match Price as of the time of the Opening Auction. Orders that are eligible for, but not executed in, the Opening Auction would become eligible for the Opening Session immediately upon conclusion of the Opening Auction.[120]

For example, if the last .T sale is 50, Arca has a limit order to buy 1000 shares at 50.5 and a limit order to sell 1000 shares at 50.2, the opening execution would occur at 50.2 for 1000 shares. As another example, suppose the last .T sale is at 50 and Arca has (1) a limit order to buy 1500 shares at 50.5; (2) a limit order to sell 1000 shares at 50.25; and (3) a limit order to sell 300 at 50.5. The opening execution would occur at 50.5 for 1300 shares. The remaining 200 shares would be bid at 50.5 in the Opening Session.

Market Order Auction.[121] Beginning at 5:00 a.m. (Pacific Time), and various times thereafter as determined from time to time by the PCXE, the Indicative Match Price of the Market Order Auction and the volume available to trade at such price, would be published via electronic means as determined from time to time by the PCXE. If such a price does not exist (*i.e.*, there is an Imbalance of market orders), Arca would indicate via electronic means that an Indicative Match Price does not exist. In addition, beginning at 5:00 a.m. (Pacific Time), and various times thereafter as determined from time to time by the PCXE, the market order Imbalance associated with the Market Order Auction, if any, would be published via electronic means as determined from time to time by the PCXE. If the difference between the Indicative Match Price and the closing price of the previous trading day's normal market hours, as determined by the Consolidated Tape, is equal to or greater than a pre-determined amount, as determined from time to time by the PCXE, Arca would assign a ''SIG'' designator to such Indicative Match Price and publish such designator via electronic means as determined from time to time by the PCXE.

For example, suppose Arca has the following orders: (1) market order to buy 5000 shares; (2) Auction-Only Limit Order to sell 1000 at 50; (3) limit order to sell 1000 at 50.50; and (4) limit order to sell 500 at 50.75. Arca would publish an Indicative Match Price of 50.75, a volume of 2500 shares and a buy Imbalance of 2500 shares.

As another example, suppose Arca has the following orders: (1) market order to buy 3000 shares; (2) market order to sell 1000; (3) limit order to sell 1000 at 41.00; and (4) limit order to sell 1000 at 41.25. Arca would publish an Indicative Match Price of 41.25 and a volume of 3000 shares and would not publish an Imbalance.[122]

Any Imbalance in the Market Order Auction could be reduced by new orders, entered on the side of the market opposite the Imbalance, pursuant to the following priority: (1) Market orders; (2) Limited Price Orders eligible for the Opening Session; (3) Limited Price Orders entered before 6:28 a.m. (Pacific Time); (4) Auction-Only Limit Orders; and (5) Cleanup Orders. Between 6:28 a.m. (Pacific Time) and the conclusion of the Market Order Auction, Limited Price Orders eligible for the Opening Session or the Core Trading Session could be cancelled, but market orders, Auction-Only Limit Orders and Cleanup Orders could not be cancelled. In addition, between 6:28 a.m. (Pacific Time) and the conclusion of the Market Order Auction, market orders and Auction-Only Limit Orders could not be entered on the same side as the Imbalance. Market orders and Auction-Only Limit Orders may could be entered on the opposite side of the Imbalance, however, any time before the Market Order Auction.[123]

Arca would determine the price of the Market Order Auction as follows: If there is no Imbalance, orders would be executed in the Market Order Auction at the Indicative Match Price as of 6:30 a.m. (Pacific Time). If an Imbalance exists, or if an equilibrium exists between buy market orders and sell market orders, as many buy market orders and sell market orders as possible would be matched, on a time priority basis, (1) at the midpoint of the NBBO at 6:30 a.m. (Pacific Time), in the case of exchange-listed securities for which the PCXE is not the primary market; or (2) at the midpoint of the NBBO at 6:30 a.m. (Pacific Time), in the case of Nasdaq securities, provided that the NBBO is not crossed; (3) at the midpoint of the first uncrossed NBBO after 6:30 a.m. (Pacific Time), in the case of Nasdaq securities in which the NBBO is crossed but the BBO is not crossed by the NBBO; (4) at the bid (offer) of the BBO that was crossed prior to 6:30 a.m. (Pacific Time), in the case of Nasdaq securities in which the BBO is crossed by a market participant; or (5) at the Indicative Match Price as of 6:30 a.m. (Pacific Time) in the case of those issues for which the PCXE is the primary market; if an equilibrium exists between buy and sell market orders, the match price would be the last Corporation sale price in the security regardless of the trading session, provided that, if the last Corporation sale price is inferior to the BBO, the match price would be the Corporation bid (offer). Such executions would be designated with a modifier to identify them as Market Order Auction trades. The market orders that are eligible for, but not executed in the Market Order Auction, would become eligible for execution in the Core Trading Session immediately upon conclusion of the Market Order Auction.[124]

The following examples clarify how the Market Order Auction works:

Example 1. Suppose Arca has the following orders: (1) Market order to buy 5000; (2) Opening Session active limit order to buy 1000 at 50; (3) Opening Session active limit order to sell 1000 at 50.5; (4) Core Session limit order to sell 500 at 50.25; (5) Auction Only Limit order to sell 3000 at 50.5 and; (6) One Market maker Cleanup Order for 2500 shares. The Market Order Auction would occur at 50.5 with the market order being executed against orders in the following manner: (1) 1000 executed against the Opening Session Limit sell order; (2) 500 executed against the Core Session limit order; (3) 3000 executed against the Auction Only Limit Order; and (4) 500 executed against the Cleanup Order.

Example 2. Suppose Arca has the following orders: (1) Market order to buy 5000; (2) Market order to sell 5000; and (3) NBBO at 6:30 is 50 to 50.5. The Market Order Auction would occur at 50.25 with the market buy order being

[120] *See* proposed PCXE Rule 7.35(b).

[121] *See* proposed PCXE Rule 7.35(c).

[122] *See* proposed PCXE Rule 7.35(c)(1).

[123] *See* proposed PCXE Rule 7.35(c)(2).

[124] *See* proposed PCXE Rule 7.35(c)(3).

executed against the market sell order at the mid-point of the spread.

Example 3. Suppose Arca has the following orders: (1) Market order to buy 5000; (2) Market order to sell 5000; and (3) NBBO at 6:30: 50.6 bid quoted at 6:29 and 50.5 offer quoted at 6:15. The Market Order Auction would occur at 50.55 with the market buy order being executed against the market sell order at the price of the most recent quote.

Example 4. Suppose Arca has the following orders for Nasdaq securities: (1) Market order to buy 5000; (2) Market order to sell 5000; (3) Opening Session active limit order to sell 1000 at 50.5; and (4) NBBO at 6:30: 50.6 bid quoted at 6:29 and 50.5 offer quoted at 6:15 (Arca). The Market Order Auction would occur at 50.5 with the market buy order being executed against the market sell order at the price of the Arca quote that has been locked crossed.

*Transition to Core Trading Session.* Limited Price Orders entered before 6:28 a.m. (Pacific Time) would participate in the Market Order Auction. Limited Price Orders designated for the Core Trading Session entered after 6:28 a.m. (Pacific Time) would become eligible for execution at 6:30 a.m. (Pacific Time) or at the conclusion of the Market Order Auction, whichever is later. Market orders entered after 6:28 a.m. (Pacific Time) and before 6:30 a.m. (Pacific Time), which are eligible for either the Market Order Auction or the Core Trading Session, would become eligible for execution at 6:30 a.m. (Pacific Time) or at the conclusion of the Market Order Auction, whichever is later, unless otherwise provided in proposed Rule 7.350(c)(2)(C). Stop Orders entered before or during the Opening Session become eligible for execution at 6:30 a.m. (Pacific Time) or at the conclusion of the Market Order Auction, whichever is later.[125]

viii. *Odd and Mixed Lots.* In addition to round lots, Users could also submit odd and mixed lots to Arca and, therefore, proposed PCXE Rule 7.38 describes the treatment of odd and mixed lots on Arca. All odd lot orders submitted by Users to Arca would have to be market orders or limit orders, where such orders are subject to no additional conditions. In other words, odd lot orders could not be Working Orders, Directed Orders, Directed Fills, Tracking Orders, or other similar orders. As an exception to this prohibition on conditional odd lot orders, Odd Lot Dealers could submit Odd Lot Tracking Orders. Mixed lot orders could be any order type supported by Arca.[126]

Round lot, mixed lot, and odd lot orders are treated in the same manner in Arca, except in the Tracking Order Process. The Tracking Order Process treats odd lot orders in a different manner from mixed lot and round lot orders, as discussed above.[127]

Finally, proposed PCXE Rule 7.38(c) states that the following actions related to odd lot orders would be considered conduct inconsistent with just and equitable principles: (1) combining odd lot orders given by different customers into a round lot order or orders unless specifically requested to do so by the customers giving the orders; (2) unbundling round lots for the purpose of entering odd lot limit orders in comparable amounts; (3) failing to aggregate odd lot orders into round lots when such orders are for the same account or for various accounts in which there is a common monetary interest; and (4) entering both buy and sell odd lot limit orders in the same stock before one of the orders is executed for the purpose of capturing the spread in the stock.[128]

ix. *Miscellaneous Trading Rules.* A. *Trading Units and Differentials.* The PCXE proposes to reduce the unit of trading in stocks from the current 100 shares to 1 share.[129] The PCXE also proposes to establish the minimum price variation for equity securities traded on Arca as 1/64 of $1.00 for those securities that are quoted in fractions and $0.01 for those equity securities that are quoted in decimals. However, at all times, the minimum price variation must would have to be consistent with the Decimalization Implementation Plan.[130] In addition, the PCXE proposes to make the Minimum Price Improvement Increment on Arca equal to $0.01 or 10% of the spread, whichever is more.[131]

B. *Firm Orders and Quotes.* The proposed rules require that ETP Holders submit firm quotes and orders to Arca. Proposed PCXE Rule 7.17(a) states no ETP Holder could submit to the PCXE an order (including Q Orders) to buy from or sell to any person any security at a stated price and/or size unless such ETP Holder is prepared to, and, upon submission of an appropriate contra-side order, does, purchase or sell, as the case may be, at such price and/or size and under such conditions as are stated at the time of submission of such order to buy or sell. Additionally, proposed PCXE Rule 7.17(b) requires that all bids and all offers be made in accordance with the provisions of Rule 11Ac1–1 under the Act,[132] governing the dissemination of quotations for reported securities.

C. *Trading Halts and Suspensions.* The PCXE guidelines for trading halts and suspensions are set forth in proposed PCXE Rules 7.12 and 7.13. PCXE proposes to keep current PCXE Rule 7.47, entitled ''Trading Halts Due to Extraordinary Market Volatility,'' renumbered as proposed PCXE Rule 7.12. In addition, proposed PCXE Rule 7.13 regarding trading suspensions states that, except as otherwise stated in the proposed rules, the Chair of the Board or the President, or the officer designee of the Chair or the President, would have the power to suspend trading in any and all securities traded on the PCXE whenever in his or her opinion such suspension would be in the public interest. No such action would continue longer than a period of two days, or as soon thereafter as a quorum of Directors can be assembled, unless the Board approves the continuation of such suspension.[133]

D. *Clearly Erroneous Policy.* Given the change from a manual to an electronic trading environment, the PCXE proposes to adopt a rule regarding clearly erroneous submissions to Arca.[134] Proposed PCXE Rule 7.11 would allow an ETP Holder that receives an execution on an order that was submitted erroneously to the PCXE for its own or customer account to request that the PCXE review the transaction. Such a request for review could be made via telephone and in writing via facsimile or e-mail. The telephonic request should be submitted immediately and the written request should be submitted within fifteen (15) minutes of the time the trade in question was executed. Once the request has been received, an officer of the PCXE designated by the President would review the transaction under dispute and determine whether it is clearly erroneous, with a view toward maintaining a fair and orderly market and the protection of investors and the public interest. For the purposes of proposed PCXE Rule 7.11, the terms of a transaction executed on the PCXE are ''clearly erroneous'' when there is an obvious error in any term, such as price,

[125] *See* proposed PCXE Rule 7.35(e).

[126] *See* proposed PCXE Rule 7.38(a).

[127] *See* proposed PCXE Rule 7.38(b). For a discussion of the Tracking Order Process, *see* Section 2(c)(iv).

[128] *See* proposed PCXE Rule 7.38(c).

[129] *See* proposed PCXE Rule 7.5.

[130] *See* proposed PCXE Rule 7.6(a), Commentary .05.

[131] *See* proposed PCXE Rule 7.6(a), Commentary .06.

[132] 17 CFR 240.11Ac1–1.

[133] Proposed PCXE Rule 7.13 would replace existing PCXE Rule 7.46, entitled ''Trading Halts and Suspensions.''

[134] *See* proposed PCXE Rule 7.11.

number of shares or other unit of trading, or identification of the security. Each party to the transaction would provide, on a timely basis, any supporting written information as could be reasonably requested by the designated officer to aid resolution of the matter.

Unless both parties (or party, in the case of a cross) to the disputed transaction agree to withdraw the initial written request for review, the transaction under dispute would be reviewed, and a determination would be rendered by the designated PCXE officer. If the officer determines that the transaction is not clearly erroneous, the officer would decline to take any action in connection with the completed trade. In the event that the officer determines that the transaction in dispute is clearly erroneous, the officer would declare the transaction null and void or modify one or more of the terms of the transaction to achieve an equitable rectification of the error that would place the parties in the same position, or as close as possible to the same position that they would have been in, had the error not occurred. The officer would promptly notify the parties of the determination reached and would issue a written resolution of the matter. The ETP Holder aggrieved by the officer's determination could appeal such determination in accordance with the provisions of proposed PCXE Rule 10.13.

In the event of any disruption or a malfunction in the use or operation of any electronic communications and trading facilities of the PCXE, the Chief Executive Officer or the President could declare a transaction arising out of the use or operation of such facilities during the period of such disruption or malfunction null and void or modify the terms of these transactions. Absent extraordinary circumstances, any such action of the Chief Executive Officer or President would be taken within thirty (30) minutes of detection of the erroneous transaction. Each ETP Holder involved in the transaction would be notified as soon as practicable, and the ETP Holder aggrieved by the action could appeal such action in accordance with the provisions of proposed PCXE Rule 10.13.

E. *Trading Ahead of Customer Limit Orders.* PCXE proposes to adopt a rule prohibiting ETP Holders from trading ahead of customer limit orders.[135] Proposed PCXE Rule 6.16 states that:

No ETP Holder may accept and hold an unexecuted limit order from its customer (whether its own customer or a customer of another ETP Holder) and continue to trade on the Corporation the subject security for its own account at prices that would satisfy the customer's limit order, without executing that limit order; provided, however, that an ETP Holder may negotiate specific terms and conditions applicable to the acceptance of limit orders only with respect to limit orders that are:

(1) For institutional customer accounts, where such account is defined as the account of:

(A) A bank, savings and loan association, insurance company, or registered investment company;

(B) An investment adviser registered either with the Securities and Exchange Commission under Section 203 of the Investment Advisers Act of 1940[136] or with a state securities commission (or agency or office performing like functions); or

(C) Any other entity (whether a natural person, corporation, partnership, trust or otherwise) with total assets of at least $50 million; or

(2) 10,000 shares or more, unless such orders are less than $100,000 in value.

Proposed PCXE Rule 6.16 would not apply to a customer limit order if the limit order is marketable at the time it is received by the ETP Holder; provided, however, if the limit order were marketable when received and then becomes non-marketable, the limit order would be subject to the Rule's prohibitions. Nothing in proposed PCXE Rule 6.16 would require ETP Holders to accept limit orders from customers. For the purposes of proposed PCXE Rule 6.16 an ETP Holder that controls or is controlled by another ETP Holder would be considered a single entity, absent appropriate information barriers. Thus, if a customer's limit order is accepted by one affiliate and forwarded to another affiliate for execution, the firms would be considered a single entity.

d. *Trade Execution and Reporting.* Under the proposal, executions occurring as a result of orders matched against the Arca Book would be reported by the PCXE to an appropriate consolidated transaction reporting system. Executions occurring as a result of orders routed away from Arca would be reported to an appropriate consolidated transaction reporting system by the relevant reporting market center. Arca would promptly notify Users of all executions of their orders as soon as the executions take place.[137]

e. *Clearance and Settlement* Under the proposed rule for clearance and settlement, each ETP Holder would have to be a clearing firm, clear transactions on the PCXE through a clearing firm, or clear transactions through an entity duly authorized by the PCXE.[138] Pursuant to proposed PCXE Rule 7.14, an ETP Holder would have to must give up the name of the clearing firm through whom each transaction on the PCXE would be cleared. If the identity of the clearing firm subsequently changed, the ETP Holder would have to report such change to the PCXE at least five (5) business days in advance.[139]

Pursuant to proposed PCXE Rule 7.14, each clearing firm must would have to be admitted to the PCXE as an ETP Holder, by meeting the qualification requirements for becoming an ETP Holder. However, if a clearing firm becomes an ETP Holder for the sole purpose of acting as a clearing firm on the PCXE, the clearing firm would not have to pay the regular ETP Holder fee. As a general matter, the clearing firm would be responsible for the clearance of the transactions effected by each ETP Holder which gives up such clearing firm's name pursuant to a letter of authorization, letter of guarantee or other authorization given by such clearing firm to such ETP Holder, which authorization would be submitted to the PCXE.[140]

Notwithstanding any other provisions contained in proposed PCXE the Rule 7.14 to the contrary, the Board could extend or postpone the time of the delivery of a transaction on the PCXE whenever, in its opinion, such action is called for by the public interest, by just and equitable principles of trade or by the need to meet unusual conditions. In such case, delivery would be effected at such time, place and manner as directed by the Board of Directors.[141]

The details of each transaction executed within Arca would be automatically processed for clearance and settlement on a locked-in basis. ETP Holders would not have to separately report their transactions to the PCXE for trade comparison purposes. All transactions effected by a Sponsored Participant would be cleared and settled, using the relevant Sponsoring ETP Holder's mnemonic or its clearing firm's mnemonic, as applicable.[142]

f. *Interaction with PCXE Application of the OptiMark System.* The PCXE Application of the OptiMark System would continue to operate as it does now. In addition, however, the

[135] *See* proposed PCXE Rule 6.16, which would replace current PCXE Rule 6.7.

[136] 15 U.S.C. 80b–3.

[137] *See* proposed PCXE Rule 7.40.

[138] *See* proposed PCXE Rule 7.14(a).

[139] *See* proposed PCXE Rule 7.14(b).

[140] *See* proposed PCXE Rule 7.14(c).

[141] *See* proposed PCXE Rule 7.14(d).

[142] *See* proposed PCXE Rule 7.41.

information from the Arca Book, but not the orders themselves, would be submitted to OptiMark at relevant times during Core Trading Hours in the form of Arca Profiles.[143] Arca Profiles are defined as ''the satisfaction profile generated by the OptiMark System from processing the Arca Book.''[144] Any Order generated from a Cycle representing matches involving Arca Profiles would be routed as an Immediate-or-Cancel Order to Arca for execution against the relevant Arca limit order. If the relevant limit order is no longer available on Arca, the Order generated from the Cycle would be automatically cancelled.[145]

g. *Limitation of Liability.* The PCXE proposes to limit the liability of the PCXE, Archipelago Exchange, L.L.C., and their respective affiliates with regard to Arca.[146] Specifically, proposed PCXE Rule 7.42 states that:

Neither the PCXE, any affiliate of the PCXE, Archipelago Exchange, L.L.C., nor any affiliate of the Archipelago Exchange, L.L.C., would be liable to Users for any loss, damages, claim or expense:

(1) growing out of the use or enjoyment of Arca; or

(2) arising from or occasioned by any inaccuracy, error or delay in, or omission of or from the collection, calculation, compilation, maintenance, reporting or dissemination of any information derived from Arca, resulting either from any act or omission by the PCXE, any affiliate of the PCXE, Archipelago Exchange, L.L.C., or any affiliate of Archipelago Exchange, L.L.C., or from any act, condition or cause beyond the reasonable control of the PCXE, any affiliate of the PCXE, Archipelago Exchange, L.L.C., or any affiliate of Archipelago Exchange, L.L.C., including, but not limited to, flood, extraordinary weather conditions, earthquake or other acts of God, fire, war, insurrection, riot, labor dispute, accident, action of government, communications or power failure, or equipment or software malfunction.

In addition, proposed PCXE Rule 7.42(b) provides that ''[e]ach ETP Holder expressly agrees, in consideration of the issuance of the ETP, to release and discharge the Corporation, any affiliate of the Corporation, Archipelago Exchange, L.L.C., and any affiliate of the Archipelago Exchange, L.L.C., and any officers, directors, employees and agents thereof, of and from all claims and damages arising from their acceptance and use of Archipelago Exchange.''

Furthermore, proposed PCXE Rule 7.42(c) states that ''[n]either the Corporation, any affiliate of the Corporation, Archipelago Exchange, L.L.C., nor any affiliate of the Archipelago Exchange, L.L.C., makes any express or implied warranties or conditions to Users as to results that any person or party may obtain from Archipelago Exchange for trading or for any other purpose, and all warranties of merchantability or fitness for a particular purpose or use, title, and non-infringement with respect to Arca are hereby disclaimed.''

3. *PCXE Membership Structure: Equity Trading Permits.* With the introduction of Arca, the PCXE intends to simplify its membership rules to reflect more accurately the change from a traditional floor trading environment. The PCXE would only have one category of members, as that term is defined in the Section 3 of the Act:[147] ETP Holders.[148] Any registered broker-dealer who wishes to be a member once Arca begins operation would have to must become an ETP Holder by purchasing an Equity Trading Permit (''ETP'')[149] from the PCXE.[150] By becoming an ETP Holder, the registered broker-dealer may effect approved securities transactions on the PCXE's two trading facilities, Arca and the PCXE Application of OptiMark. As is the case under the current PCXE Rules, an ETP Holder: (1) Must agree to be bound by the Certificate of Incorporation, Bylaws and Rules of the PCXE, and by all applicable rules and regulations of the SEC; (2) haves no ownership or distribution rights in the PCXE; and (3) have limited voting rights to nominate two Directors to the PCXE's Board of Directors and one Governor to the Board of Governors of the PCX Parent.

With the elimination of the trading floor and the introduction of remote electronic trading on the PCXE, two aspects of the current PCXE Rules relating to memberships become obsolete. First, under the existing PCXE Rules, an ETP Firm must have a natural person, a Nominee, to act as its representative on the PCXE. Because an ETP Firm no longer needs a natural person to act on its behalf on the floor, the concept of a Nominee of the ETP Firm has been eliminated.[151] Therefore, an ETP Firm would be re-designated as an ETP Holder.[152] In addition, the definition of an ETP Holder would no longer be defined as a ''natural person'' or ''Nominee,'' but rather a ''sole proprietorship, partnership, corporation, limited liability company or other organization'' that has been issued an ETP.[153]

Second, an important difference between an Equity Automated Systems Access Permits (''ASAP'') and an ETP today is that an ETP allows its holder to transact business on the floor of the PCXE, whereas the Equity ASAP does not.[154] Because the PCXE proposes to eliminate the floor, there will no longer be a need for two separate membership categories. Therefore, Equity ASAP Holders would be re-designated as ETP Holders and the rules related to Equity ASAP Holders would be deleted.[155]

4. *Applicability of Existing PCXE Rules.* In addition to the new proposed rules set forth above, the PCXE proposes to delete the following existing PCXE Rules, which relate primarily to floor trading and specialists or are otherwise inapplicable to the new trading environment: PCXE Rule 1.1(g) (Floor Trader); PCXE Rule 1.1(o) (Non-Resident Organization); PCXE Rule 2.12(a); PCXE Rule 2.24 (Trading Floor Employees of ETP Firms); PCXE Rule 4.1(b–c) (Minimum Net Capital for Specialist Firms); PCXE Rule 4.2 (Specialist Post Capital); PCXE Rule 6.8 (Discretionary Transactions); PCXE Rule 6.16(b) (Miscellaneous Prohibitions); PCXE Rule 7.1(a)(6) (Freely Transferable Security); PCXE Rule 7.1(a)(8) (Local Security); PCXE Rule 7.1(a)(9) (Dually

[143] *See* proposed PCXE Rules 7.39(a) and 7.47(b). Proposed PCXE Rule 7.47(b) replaces PCXE Rule 7.73(b) which described a specialist's obligations regarding the OptiMark System.

[144] *See* proposed PCXE Rule 7.45(a)(6).

[145] *See* proposed PCXE Rules 7.39(b), 7.45(a)(5) and 7.48(b).

[146] *See* proposed PCXE Rule 7.42.

[147] 15 U.S.C. 78c.

[148] *See* proposed PCXE Rule 1.1(n) (definition of ''ETP Holder'').

[149] *See* proposed PCXE Rule 1.1(m) (definition of ''ETP'').

[150] *See* proposed PCXE Rule 2.100 (Any PCX member, as defined in the PCX Parent Rule 1.1, or Equity ASAP Holder that wishes to continue to effect securities transactions without interruption on the PCXE's Trading Facilities must obtain an ETP prior to the first day Arca becomes operational. If the PCX member or Equity ASAP Holder fails to obtain an ETP prior to that date, the PCX member or Equity ASAP Holder will not be permitted to effect securities transactions on the PCXE's Trading Facilities until such time as it does obtain an ETP).

[151] PCXE proposes to delete the following Nominee-related PCXE Rules or sections thereof: PCXE Rule 1.1(n) (definition of ''Nominee''); PCXE Rule 2.1(b)(2) (''Securities Business''); PCXE Rule 2.2 (''Qualifications and Application of Individual Applicants''); PCXE Rule 2.3(b)–(d) (''Qualifications of Firm Applicants''); PCXE Rule 2.11(b)–(c) (''Sole Proprietors''); PCXE Rule 2.21(c) (''Termination of Trading Privileges''); and PCXE Rule 2.22(c) (''Limited Transferability'').

[152] PCXE proposes to delete PCXE Rule 1.1(m) (''ETP Firm'').

[153] *Compare* PCXE Rule 1.1(l) (''ETP Holder'') with proposed PCXE Rule 1.1(n) (''ETP Holder'').

[154] *Compare* PCXE Rule 1.1(i) (''Equity ASAP'') with proposed PCXE Rule 1.1(m) (''ETP'').

[155] PCXE proposes to delete the following Equity ASAP-related: PCXE Rule 1.1(i) (definition of ''Equity ASAP''); PCXE Rule 1.1(j) (definition of ''Equity ASAP Holder'') and Rule 2.16 (Terms and Conditions Relating to Equity ASAPs).

Traded Security); PCXE Rule 7.2, Comm. 01; PCXE Rule 7.4 (Types of Orders); PCXE Rule 7.5 (Authority of Trading Officials); PCXE Rule 7.8 (Trading Floor Standards); PCXE Rule 7.12 (Recognized Quotations); PCXE Rule 7.14 (Trading in ''When Issued/Distributed'' Securities); PCXE Rule 7.17 (Manner of Bidding and Offering); PCXE Rule 7.18 (Types of Bids or Offers); PCXE Rule 7.19 (Priority and Precedence of Bids and Offers); PCXE Rule 7.20 (Cabinet Dealings); PCXE Rule 7.21 (Error Accounts); PCXE Rule 7, Section 5 (ETP Holders Acting as Specialists); PCXE Rule 7, Section 6 (Specialists Acting as Odd-lot Dealers); PCXE Rule 7, Section 7 (Trading Practices and Procedures) (except for Rule 7.40—Short Sales, Rule 7.45—Stock Option Transactions and Rule 7.47—Trading Halts Due to Extraordinary Market Volatility); PCXE Rule 7, Section 8 (Contracts in Securities) (except for Rules 7.50 & 7.51—Definitions and General Provisions and Rule 7.53—Delivery of Securities); PCXE Rule 7.69 (Liability of Corporation Relating to Operation of ITS); PCXE Rule 7.70 (Pacific Computerized Order Access System (''P/COAST'')); PCXE Rule 10.12(g) (Floor Citations); PCXE Rule 10.13 (Summary Sanction Procedures); and PCXE Rule 12.1(a); PCXE Equity Floor Procedure Advices.

Furthermore, minor conforming changes have been made throughout the existing PCXE Rules to conform the proposed rules to the new terminology associated with Arca. For example, PCXE we have deleted references to, among other things, Equity ASAP Holders, ETP Firms and the trading floor throughout the PCXE Rules. Finally, any other existing PCXE rules which have not been deleted or amended as specified remain in effect as they are currently.

The Exchange believes the proposed rule change is consistent with Section 6(b) of the Act,[156] in general, and furthers the objectives of Section 6(b)(5),[157] in particular, in that it is designed to promote just and equitable principles of trade, to foster cooperation and coordination with persons engaged in facilitating transactions in securities, and to remove impediments and perfect the mechanisms of a free and open market and to protect investors and the public interest.

[156] 15 U.S.C. 78f(b).

[157] 15 U.S.C. 78f(b)(5).

**B. Self-Regulatory Organization's Statement on Burden on Competition**

The Exchange does not believe that the proposed rule change will impose any burden on competition that is not necessary or appropriate in furtherance of the purposes of the Act. In fact, PCX and PCXE believe that the introduction of a fully electronic trading venue will serve to enhance competition.

*C. Self-Regulatory Organization's Statement on Comments on the Proposed Rule Change Received From Members, Participants, or Others*

Written comments on the proposed rule change were neither solicited nor received.

**III. Date of Effectiveness of the Proposed Rule Change and Timing for Commission Action**

Within 35 days of the date of publication of this notice in the **Federal Register** or within such longer period (i) as the Commission may designate up to 90 days of such date if it finds such longer period to be appropriate and publishes its reasons for so finding, or (ii) as to which the self-regulatory organization consents, the Commission will—

(A) by order approve such proposed rule change, or

(B) institute proceedings to determine whether the proposed rule change should be disapproved.

**IV. SEC's Solicitation of Comments**

The PCX proposes that Arca become a facility of PCXE that would replace the PCX's traditional floor-based auction market for equity securities. The PCX's proposal presents several novel issues with respect to the operation of a national securities exchange. In addition to requesting comments concerning the overall proposal, the Commission requests comments addressed to the following specific items: (1) Discretionary Orders, (2) the minimum price improvement level, (3) customer order priority, and (4) the opening and late trading sessions.

First, the PCX's proposal would enable users to submit ''Discretionary Orders'' for execution on Arca. Proposed PCXE Rule 7.31(h)(2) defines a Discretionary Order as ''an order to buy or sell a stated amount of a security at a specified, undisplayed price (the 'discretionary price'), in addition to at a specified, displayed price.'' For example, an incoming marketable limit order may be matched for execution against the displayed price of a Discretionary Order. An otherwise non-marketable incoming limit order, however, may trigger an execution against a Discretionary Order at a price within the undisplayed, discretionary price range of the Discretionary Order. The PCX believes that Discretionary Orders will help replicate the dynamic of a traditional floor-based auction market, in particular the trading discretion of a floor broker.[158]

The Commission notes that, pursuant to Rule 11Ac1–1 under the Act [159] (the ''Quote Rule''), each responsible broker or dealer is required promptly to communicate to its exchange or association, pursuant to the procedures established by that exchange or association, its best bids, offers, and quotation sizes for any subject security. The Commission seeks general comments on the proposed availability of Discretionary Orders on Arca in the light of the Quote Rule. In addition, the Commission seeks specific comments on the following:

- What are the potential advantages or disadvantages of Discretionary Orders with regard to:
  (a) price discovery;
  (b) market transparency; and
  (c) transaction costs for investors?
- Should a distinction be made between Discretionary Orders placed on behalf of public customers and Discretionary Orders placed by PCXE market makers trading for their own accounts?

Second, proposed PCXE Rule 7.6(a), Commentary .06, would establish a minimum price improvement increment of $.01 or 10% of the spread, whichever is greater, with regard to the execution of Directed Orders [160] and Cross Orders.[161] Accordingly, under the PCX's proposal, the minimum price improvement increment for Directed Orders and Cross Orders would not be less than $.01. The Commission notes that, under the PCX's proposal, the minimum price variation for equity securities traded on Arca would be 1/64 of $1.00 for securities that are quoted in fractions, and $.01 for equity securities that are quoted in decimals.[162] The Commission seeks comment on whether the PCX's proposed minimum price

[158] Telephone conversation between Peter Bloom, Director of Regulatory Projects, PCX, and Patrick Joyce, Special Counsel, Commission, November 16, 2000.

[159] 17 CFR 240.11Ac1–1.

[160] *See* proposed PCXE Rules 7.31(i) (definition of ''Directed Order'') and (j) (definition of ''Directed Fill''). The Commission notes that only executions of Directed Orders against Directed Fills would be subject to the minimum price improvement increment. *See* proposed PCXE Rule 7.37.

[161] *See* proposed PCXE Rule 7.31(s) (definition of ''Cross Order'').

[162] The proposed rule further specifies that the minimum price variation shall be consistent with the Decimal Implementation Plan. *See* proposed PCXE Rule 7.6(a), Commentary .05.

improvement interval that may be greater than the minimum price variation for internalized or otherwise preferenced orders is appropriate.[163]

Third, historically, securities exchanges have adopted rules that give priority to the agency orders of public customers over the proprietary trades of member firms, in recognition that traders on the floor of an exchange generally possess an informational advantage over public customers. Because the PCX seeks to establish Arca as a purely electronic facility that would not employ a trading floor, the PCX does not believe that its users would possess any informational advantage over public customers who submit agency orders for execution on the Arca Book. Accordingly, the Arca Book would not give precedence to agency orders over principal orders, but rather would rank orders based upon price/time priority.[164] The Commission seeks comment on the order execution priority of the Arca Book, including whether market makers' orders should have priority equal to orders of the same type placed by public customers.

Fourth, and finally, the PCX proposes to operate three distinct trading sessions: an opening session, a core trading session, and a late trading session. The opening session, which would begin at 5:00 a.m. (Pacific Time) and run until the start of the core trading session, would include an Opening Auction at the start of the opening session and a Market Order Auction that would begin at 6:30 a.m. (Pacific Time). The core trading session for each security would begin immediately after conclusion of the Market Order Auction for such security. The Commission seeks comments about the opening session, particularly the opening procedures and the transition from the opening session to the core trading session.

The PCX also proposes to operate a late trading session that would begin when the core trading session ends and conclude at 5:00 p.m. (Pacific Time), contingent upon arrangements with the Consolidated Tape Association. Currently, after-hours trading sessions for listed securities end at 3:30 p.m. (Pacific Time). The Commission invites comments about the PCX's proposed late trading session, including the possible extension of the late trading session to 5:00 p.m. (Pacific Time).

The Commission invites interested persons to submit written data, views, and arguments concerning the proposed rule change, including whether it is consistent with the Act. Persons making written submissions should file six copies thereof with the Secretary, Securities and Exchange Commission, 450 Fifth Street, NW., Washington, DC 20549–0609. Copies of the submission, all subsequent amendments, all written statements with respect to the proposed rule change that are filed with the Commission, and all written communications relating to the proposed rule change between the Commission and any person, other than those that may be withheld from the public in accordance with the provisions of 5 U.S.C. 552, will be available for inspection and copying in the Commission's Public Reference Room. Copies of such filing will also be available for inspection and copying at the principal office of the PCX. All submissions should refer to File No. SR–PCX–00–25 and should be submitted by January 5, 2001.

For the Commission, by the Division of Market Regulation, pursuant to delegated authority.[165]

**Margaret H. McFarland,**

*Deputy Secretary.*

## Appendix A—Rules of PCX Equities, Inc.

**Rule 1**

**Definitions**

Rule 1.1 Whenever and wherever used herein, unless the context requires otherwise, the following terms shall be deemed to have the meanings indicated:

*Arca Book*

*(a) The term ''Arca Book'' shall refer to the Archipelago Exchange's electronic file of orders, which contains all the User's orders in each of the Directed Order, Display Order, Working Order and Tracking Order Processes.*

Affiliate

*(b)*[(a)] An ''affiliate'' of, or person ''affiliated['']] with'' a specific person, is a person that directly, or indirectly through one or more intermediaries, controls or is controlled by, or is under common control with, the person specified.

Allied Person

*(c)*[(b)]The term ''Allied Person'' shall refer to an individual, who is:

(1) an employee of an ETP [Firm or Equity ASAP] Holder who controls such firm, or

(2) an employee of an ETP [Firm or Equity ASAP] Holder corporation who is a director or a principal executive officer of such corporation, or

(3) an employee of an ETP [Firm or Equity ASAP] Holder limited liability company who is a manager or a principal executive officer of such limited liability company, or

(4) a general partner in an ETP [Firm or Equity ASAP] Holder partnership; and who has been approved by the Corporation as an Allied Person.

Approved Person

*(d)*[(c)]The term ''Approved Person'' shall refer to a person who is not an ETP Holder, nor an employee or an Allied Person of an [ETP Firm or Equity ASAP] Holder, and who:

(1) is a director of an ETP [Firm or Equity ASAP] Holder, or

(2) controls an ETP [Firm or Equity ASAP] Holder, or

(3) beneficially owns, directly or indirectly, 5% or more of the outstanding equity securities of an ETP [Firm or Equity ASAP] Holder, or

(4) has contributed 5% or more of the partnership capital, and who has been approved by the Corporation as an Approved Person.

*Archipelago Exchange*

*(e) The term ''Archipelago Exchange'' shall mean the electronic securities communications and trading facility designated by the Board of Directors through which orders of Users are consolidated for execution and/or display.*

Associated Person

*(f)*[(d)]The term ''Associated Person'' shall refer to a person who is a partner, officer, director, member of a limited liability company, trustee of a business trust, employee of an ETP [Firm or Equity ASAP] Holder or any person directly or indirectly controlling, controlled by or under common control with an ETP [Firm or Equity ASAP] Holder.

*Authorized Trader*

*(g) The term ''Authorized Trader'' or ''AT'' shall mean a person who may submit orders to the Corporation's Trading Facilities on behalf of his or her ETP Holder or Sponsored Participant.*

*BBO*

*(h)* The term ''BBO'' shall refer to the best bid or offer on the Archipelago Exchange.

Control

*(i)*)[(e)]—No change.

*Core Trading Hours*

*(j)* The term ''Core Trading Hours'' shall mean the hours of 6:30 am through 1:00 pm (Pacific Time) or such other hours as may be determined by the Corporation from time to time.

Corporation

*(k)*[(f)] The term ''Corporation'' shall mean PCX Equities, Inc., as described in the *PCX Equities, Inc.'s* [Corporation's] Certificate of Incorporation and [the PCX Equities, Inc.] Bylaws.

*Eligible Security*

*(l)* The term ''Eligible Security'' shall mean any equity security (i) either listed on the

[163] The Commission notes that no other registered national securities exchange has such a requirement, but that the NASD requires a registered Nasdaq market maker to improve the price of a customer order that it holds by at least 1/16 or one-half of the spread, whichever *is less.*

[164] The Commission notes that proposed PCXE Rule 6.16 would prohibit a market maker from trading for its proprietary account on Arca ahead of its own customer's limit order at the same price.

[165] 17 CFR 200.30–3(a)(12).

Corporation or traded on the Corporation pursuant to a grant of unlisted trading privileges under Section 12(f) of the Exchange Act and (ii) specified by the Corporation to be traded on the Archipelago Exchange, PCXE Application or other facility, as the case may be.

[Floor Trader]

[(g)—Deleted.]

[Equity ASAP]

[(i)—Deleted.]

[Equity ASAP Holder]

[(j)—Deleted.]

ETP

*(m)*[(k)]—No change.

ETP Holder

*(n)*[(1)] The term ''ETP Holder'' shall refer to a [natural person, in good standing, who] *sole proprietorship, partnership, corporation, limited liability company or other organization in good standing that* has been issued an ETP[, or has been named as a Nominee]. An ETP Holder must be a registered broker or dealer pursuant to Section 15 of the Securities Exchange Act of 1934[, or a nominee or an associated person of a registered broker or dealer that has been approved by the Corporation to conduct business on the Corporation's trading facilities]. An ETP Holder shall agree to be bound by the Certificate of Incorporation, Bylaws and Rules of the Corporation, and by all applicable rules and regulations of the Securities and Exchange Commission.

An ETP Holder shall not have ownership or distribution rights in the Corporation. An ETP Holder will have limited voting rights to nominate two *Directors* [members] to the Corporation's Board of Directors and one *Governor* [member] to the Board of Governors of the PCX Parent. An ETP Holder will have status as a ''member'' of the PCX Parent as that term is defined in Section 3 of the Securities Exchange Act of 1934, as amended.

[ETP Firm]

[(m)—Deleted.]

*General Authorized Trader*

*(o) The term ''General Authorized Trader'' or ''GAT'' shall mean an authorized trader who performs only non-market making activities on behalf of an ETP Holder.*

Good Standing

*(p)*[(h)] The term ''good standing'' shall refer to an ETP Holder[, Equity ASAP Holder or ETP Firm] who is not in violation of any of its agreements with the Corporation or any of the provisions of the Rules or Bylaws of the Corporation, and who has maintained all of the conditions for approval of the ETP.

*Imbalance*

*(q) For the purposes of the Opening Auction and the Market Order Auction, as the case may be, the term ''Imbalance'' shall mean the number of buy or sell orders that can not be matched with other orders at the Indicative Match Price at any given time.*

*Indicative Match Price*

*(r) For the purposes of the Opening Auction or the Market Order Auction, as the case may be, the term ''Indicative Match Price'' shall mean for each security (1) the price at which the maximum volume of orders are executable; or (2) if there are two or more prices at which the maximum volume of orders are executable, the price that is closest to the closing price of the previous trading day's normal market hours, as determined by the Consolidated Tape.*

*Limited Price Order*

*(s) The term ''Limited Price Order'' shall mean any order with a specified price or prices (e.g., limit orders and Working Orders), other than Stop Orders.*

*Marketable*

*(t) The term ''Marketable'' shall mean, for a Limited Price Order, the price matches or crosses the NBBO on the other side of the market. Market orders are always considered marketable.*

*Market Maker*

*(u) The term ''Market Maker'' shall refer to an ETP Holder that acts as a Market Maker pursuant to Rule 7.*

*Market Maker Authorized Trader*

*(v) The term ''Market Maker Authorized Trader'' or ''MMAT'' shall mean an authorized trader who performs market making activities pursuant to Rule 7 on behalf of a Market Maker.*

*Market Participant*

*(w) For the purposes of Rule 7, the term ''Market Participant'' shall include electronic communications networks (''ECN''), dealer-specialists registered with a national securities exchange, and market makers registered with a national securities association.*

*NBBO*

*(x) The term ''NBBO'' shall refer to the national best bid or offer.*

[Nominee]

[(n)—Deleted.]

[Non-Resident Organization]

[(o)—Deleted.]

*Notice of Consent*

*(y) The term ''Notice of Consent'' shall mean a written statement provided to the Corporation by a Sponsoring ETP Holder by which the Sponsoring ETP Holder acknowledges responsibility for the orders, executions and actions of its Sponsored Participant(s).*

*NOW Recipient*

*(z) The term ''NOW Recipient'' shall mean any exchange, ECN or other broker-dealer (1) with which the Archipelago Exchange maintains an electronic linkage, which includes ITS, and (2) which provides instantaneous responses to NOW Orders routed from the Archipelago Exchange. The Corporation shall designate from time to time those exchanges, ECNs or other broker-dealers that qualify as NOW Recipients.*

*Odd Lot Dealer*

*(aa) The term ''Odd Lot Dealer'' shall refer to a Market Maker that is registered as an Odd Lot Dealer as described in Rule 7.25.*

Parent

*(bb)* [(p)]—A ''parent'' of a specified person or organization is an affiliate controlling such person or organization directly[,] or indirectly through one or more intermediaries.

*Participant*

*(cc) The term ''Participant'' shall mean any ETP Holder, Allied Person, partner, approved person, stockholder associate, registered employee or other full-fime employee of an ETP Holder.*

PCX Parent

*(dd)* [(q)] The term ''PCX Parent'' shall refer to the Pacific Exchange, Inc., a Delaware corporation and national securities exchange as the term is defined *in* [by] Section 6 of the Securities Exchange Act of 1934, as amended. The Pacific Exchange, Inc. is the sole shareholder of the Corporation.

Person

*(ee)* [(r)]—No change.

*Registered Employee*

*(ff) The term ''Registered Employee'' shall mean any person soliciting or conducting business in securities on behalf of an ETP Holder.*

*Routing Agreement*

*(gg) The term ''Routing Agreement'' shall mean the form of Agreement between an ETP Holder and the broker-dealer affiliate of Archipelago Exchange, L.L.C., under which the broker-dealer affiliate of Archipelago Exchange, L.L.C., agrees to act as agent for routing orders of the ETP Holder and the ETP Holder's Sponsored Participants entered into the Archipelago Exchange to other market centers or broker-dealers for execution, whenever such routing is required.*

*Security*

*(hh) The terms ''security'' and ''securities'' mean any security as defined in Rule 3(a)(10) under the Securities Exchange Act of 1934.*

Self-Regulatory Organization (''SRO'')

*(ii)* [(s)]—No change.

*Sponsored Participant*

*(jj) The term ''Sponsored Participant'' shall mean a person which has entered into a sponsorship arrangement with a Sponsoring ETP Holder pursuant to Rule 7.29.*

*Sponsoring ETP Holder*

*(kk) The term ''Sponsoring ETP Holder'' shall mean a broker-dealer that has been issued an ETP by the Corporation who has been designated by a Sponsored Participant to execute, clear and settle transactions resulting from the Archipelago Exchange. The Sponsoring ETP Holder shall be either (i) a clearing firm with membership in a clearing agency registered with the Commission that maintains facilities through which transactions may be cleared or (ii) a correspondent firm with a clearing arrangement with any such clearing firm.*

*Sponsorship Provisions*

*(ll) The term ''Sponsorship Provisions'' shall mean the provisions sent forth in Rule 7.29(b)(2). For a Sponsored Participant to obtain authorized access to the Archipelago Exchange, the Sponsored Participant and its Sponsoring ETP Holder must enter into an agreement which incorporates the Sponsorship Provisions.*

*Stockholder Associate*

*(mm) The term ''Stockholder Associate'' means a person who is the employee of an ETP Holder, who is actively engaged in its business and devotes the major portion of his or her time thereto, who is not an ETP Holder or Allied Person, and who, as a holder of equity securities, has been approved by the Corporation as a stockholder associate.*

Trading Facilities

*(nn)* [(t)] The term ''Trading Facilities'' *or ''Facilities''* shall refer to [the Corporation's Los Angeles and San Francisco trading floors, office space] *any and all electronic or automatic trading systems* provided by the Corporation to ETP Holders [and ETP Firms in connection with their floor trading activities, and any and all electronic or automatic systems access programs provided by the Corporation to ETP Holders, ETP Firms and Equity ASAP Holders].

*User*

*(oo) The term ''User'' shall mean any ETP Holder or Sponsored Participant who is authorized to obtain access to the Archipelago Exchange pursuant to Rule 7.29.*

*User Agreement*

*(pp) The term ''User Agreement'' shall mean an appropriate subscription agreement entered into by the User with Archipelago Exchange, L.L.C.*

Wholly Owned Subsidiary

*(qq)* [(u)] The term ''wholly owned subsidiary'' *shall* mean[s) a subsidiary substantially all of whose outstanding voting securities are owned by its parent and/or the parent's other wholly owned subsidiaries.

**Rule 2**

**Equity Trading Permits [and Equity ASAPs]**

Securities Business

Rule 2.1(a) Every ETP Holder[, ETP Firm and Equity ASAP Holder] shall have as its principal purpose the conduct of a securities business.

(b) An ETP Holder[, ETP Firm and Equity ASAP Holder] shall be deemed to have such a purpose if and so long as[:]

[(1)] the ETP Holder[, ETP Firm or Equity ASAP Holder, as the case may be,] has qualified and acts in respect of its business in an approved capacity pursuant to the Certificate of Incorporation, Bylaws, Rules and procedures of the Corporation; and all transactions are in compliance with Section 11(a) of the Securities Exchange Act of 1934 as amended and the Rules and regulations adopted thereunder[; or]

[(2) the ETP Holder is a general partner, executive officer or nominee of an ETP Firm who has conferred ETP trading privileges upon that ETP Firm].

(c) No ETP Holder[, ETP Firm or Equity ASAP Holder] shall utilize any scheme, device, arrangement, agreement or understanding designed to circumvent or avoid, by reciprocal means or in any other manner, the provisions of this Rule 2.1.

Qualifications [and Application of Individual Applicants] *of Applicants*

[Rule 2.2—Deleted.]

[Qualifications of Firm Applicants]

Rule [2.3.] *2.2*

[(a)] An ETP [or Equity ASAP] may be held by an entity which is a registered broker or dealer pursuant to Section 15 of the Securities Exchange Act of 1934, as amended, including sole proprietors, partnerships, limited liability partnerships, corporations, and limited liability companies. A corporation, limited liability company, or limited liability partnership must be organized under the laws of one of the states of the United States or under other laws as the Corporation's Board *of* Directors shall approve.

[(b)–(d)—Deleted.]

Application Procedures

Rule [2.4.] *2.3*

(a) Every [individual] *person* applying to become an ETP Holder[, every individual applying to become the Nominee of an ETP Firm, every entity upon whom an ETP Holder will confer trading privileges, and every entity applying to become an Equity ASAP Holder] shall complete an application on a form prescribed by the Corporation and shall file it with the Corporation. The application shall be filed with such application fees and such documents as may be required by the Corporation. Application fees are not transferable and not refundable.

(b) Within a reasonable period of time following receipt of an application for an ETP [or Equity ASAP], the name of the applicant[, and in the case of an entity, the individual in whose name the permit will be held,] shall be distributed to all ETP Holders and [Equity ASAP Holders and] shall be posted by the Corporation by publishing the name of each applicant in the Corporation's Weekly Bulletin for at least ten (10) calendar days prior to the approval or rejection of the application by the Corporation.

(c) Every [individual] applicant and[, in the case of applicant entities,] all persons associated with the [entity,] *applicant* may be investigated by the Corporation. The applicant shall file with the Corporation such additional documents as may be requested by the Corporation.

(d) Upon completion of the application process, the Corporation shall consider and then approve or reject the application, unless there is just cause for delay. [Individual] *Sole proprietor* applicants and persons associated with applicant entities may be required to appear in person before the Corporation. The Corporation may also require any ETP Holder[, Equity ASAP Holder] or person associated with an ETP [Firm or Equity ASAP] Holder who may possess information relevant to the applicant's suitability for holding an ETP [or Equity ASAP] to provide information or testimony.

(e) The Corporation shall approve an application if it finds that the applicant meets all of the qualifications for holding an ETP [or Equity ASAP]. The Corporation shall reject an application if it does not make such a finding or if it finds that, if the application were approved, the permit holder would be subject to suspension or expulsion under the provisions of the Bylaws, Rules or procedures of the Corporation or the rules, regulations and procedures promulgated under the Securities Exchange Act of 1934, as amended.

(f)—No change.

(g) In the event that an application is rejected by the Corporation, the applicant shall have an opportunity to be heard upon the specific grounds for the rejection, in accordance with the provisions of Rule 10. An applicant denied an ETP [or Equity ASAP] may challenge the denial by filing with the Corporate Secretary, a petition for review of the denial by the Corporation's Board Appeals Committee. Such petition shall be filed within thirty (30) calendar days of the date upon which the Corporation's decision was mailed to the applicant and shall be filed in accordance with the provisions of Rule [10.14] *10.13.*

Denial of or Conditions to ETPs [or Equity ASAPs]

Rule [2.5.] *2.4*(a) The Corporation may deny (or may condition) trading privileges under an ETP or [Equity ASAP or] may bar a natural person from becoming associated (or may condition an association) with an ETP [Firm or Equity ASAP] Holder for the same reasons that the Securities and Exchange Commission may deny or revoke a broker or dealer registration and for those reasons required or allowed under the Securities Exchange Act of 1934, as amended.

(b) The Corporation may deny or may condition trading privileges under an ETP [or Equity ASAP], or may prevent a natural person from becoming associated (or may condition an association) with an ETP [Firm or Equity ASAP] Holder when the applicant directly or indirectly:

(1) is unable to satisfactorily demonstrate its present capacity to adhere to all applicable Corporation and Securities and Exchange Commission policies, [Rules] *rules* and regulations, including, without limitation, those concerning record-keeping, reporting, finance and trading procedures;

(2) has previously violated, and there is a reasonable likelihood such applicant will again engage in acts or practices violative of, any applicable Corporation or Securities and Exchange Commission policies, [Rules] *rules* and regulations, including, without limitation, those concerning record-keeping, reporting, finance and trading procedures or those [Rules] *rules* of other self-regulatory organizations of which such applicant is or was a member[:]

(3)–(5)—No change.

(6) owes an undisputed debt to an ETP Holder[, ETP Firm or Equity ASAP Holder] arising out of the securities business, in which case the Corporation may take such action as it deems appropriate, including, without limitation, denying the application or conditioning the issuance of the ETP [or Equity ASAP] upon the execution of an agreement regarding repayment of the debt;

(7) allegedly owes a debt to an ETP Holder[, ETP Firm or Equity ASAP Holder] arising out of the securities business, in which case the Corporation may take such action as it deems appropriate, including, without limitation, denying the application or conditioning the issuance of the ETP [or Equity ASAP] upon the debt being submitted to arbitration pursuant to Rule 12 at the request of the ETP [Holder, ETP Firm or Equity ASAP] Holder to whom the debt is allegedly owed;

(8)–(10)—No change.

Series 7 Requirement [for Off-Floor Traders]

(A) Traders of ETP [Firms and Equity ASAP] Holders for which the Corporation is the Designated Examining Authority (''DEA'') must successfully complete the General Securities Registered Representative Examination (Test Series 7), if the primary business of the ETP [Firm or Equity ASAP] Holder involves the trading of securities that is unrelated to the performance of the functions of a registered [specialist or registered floor broker] *Market Maker. Unless required to complete the Series 7 under Rule 7.21(b)(2), the* [The] following are exempt from the requirement to successfully complete the Series 7 Examination: ETP Holders who are performing the function of a registered [specialist or registered floor broker] *Market Maker* (pursuant to Rule [7.22(a)]) *7*).

For purposes of this Rule:

(i) The term ''trader'' means a person (a) who is directly or indirectly compensated by an ETP [Firm or Equity ASAP] Holder, or who is any other associated person of an ETP [Firm or Equity ASAP] Holder and (b) who trades, makes trading decisions with respect to, or otherwise engages in the proprietary or agency trading of securities; and

(ii) The term ''primary business'' means greater than 50% of the ETP [Firm's or Equity ASAP] Holder's business.

(B) Each ETP [Firm and Equity ASAP] Holder for which the Corporation is the DEA must complete, on an annual basis, and on a form prescribed by the Corporation, a written attestation as to whether the ETP [Firm's or Equity ASAP] Holder's primary business is conducted in the performance of the function of a registered [specialist or a registered floor broker] *Market Maker* (pursuant to Rule [7.22(a)]) *7*).

(C) The requirement to complete the Series 7 Examination will apply to current traders of ETP [Firms and to Equity ASAP] Holders that meet the criteria of subsection (A), above, as well as to future traders of ETP [Firms or Equity ASAP] Holders that meet the criteria of subsection (A), above, at a later date. Traders of ETP [Firms or Equity ASAP] Holders that meet the criteria of subsection (A), above, at the time of SEC approval of this Rule, must successfully complete the Series 7 Examination within six months of notification by the Corporation.

(11)–(13)—No change.

(c) The Corporation may waive or modify a required examination for any applicant if, within two years of the date such applicant applied to the Corporation for an ETP [or Equity ASAP], such applicant has successfully completed a comparable examination administered by a self-regulatory organization or the Securities and Exchange Commission.

(d) The Corporation shall regard the failure by any applicant to carry out any contract or honor any financial commitment with an ETP Holder[, ETP Firm or Equity ASAP Holder] as a violation of just and equitable principles of trade, and an indication of a broker or dealer applicant's inability to meet such standards of financial responsibility as may be set by the Corporation.

(e) No change.

(f) The Corporation's Business Conduct Committee may take action against an ETP Holder[, ETP Firm or Equity ASAP Holder] under Rule 10 when any of the above reasons for denying or conditioning the issuance of an ETP [or Equity ASAP, as the case may be,] come into existence after an application has been approved and an ETP [or Equity ASAP] has been issued.

Publication of Approved ETP [and Equity ASAP] Applications

Rule [2.6] *2.5* With respect to each ETP [and Equity ASAP] that is issued, the Corporation shall promptly distribute a notice thereof to all ETP Holders[, ETP Firms or Equity ASAP Holders] by publishing the name of each new ETP Holder[, ETP Firm and Equity ASAP Holder] in the Corporation's Weekly Bulletin.

Requirements of Holding an ETP [or Equity ASAP]

Requirements Applicable Generally

Revocable Privilege

Rule [2.7] *2.6.* The issuance of an ETP [or an Equity ASAP] constitutes only a revocable privilege and confers on its holder no right or interest of any nature to continue as an ETP Holder[, ETP Firm or Equity ASAP Holder, as the case may be].

No Liability for Using Trading Facilities

Rule [2.8] *2.7.* The Corporation shall not be liable for any damages sustained by an ETP Holder[, ETP Firm or Equity ASAP Holder] growing out of the use or [employment] *enjoyment* by such ETP [Holder, ETP Firm or Equity ASAP] Holder of the facilities afforded by the Corporation in the conduct of [their] *its* business. Each ETP Holder[, ETP Firm and Equity ASAP Holder] expressly [agree] *agrees,* in consideration of the issuance of the ETP [or Equity ASAP, as the case may be], to release and discharge the Corporation, its officers, directors, employees and agents, of and from claims or damages arising from their acceptance and use of such ETP [or Equity ASAP] and their agreement to be bound by the Certificate of Incorporation, Bylaws and Rules of the Corporation.

Corporation Not Bound By ETP Holder[, ETP Firm or Equity ASAP Holder] Agreements

Rule [2.9] *2.8.* Nothing contained in any partnership agreement, limited partnership agreement, articles of incorporation, resolutions, by-laws or any other organizational documents, or amendment thereto, of an ETP [Firm or Equity ASAP] Holder, not any other agreements between any ETP [Holder, ETP Firm and/or Equity ASAP] Holder and a third party, or any amendment thereto, even though submitted to or filed with the Corporation, shall obligate or be binding upon the Corporation.

Only ETP [Firms and Equity ASAP Holders To Trade Under Firm Name] *Holder Organizations May Carry Customer Accounts*

[Rule 2.10.] *Rule 2.9.* [Only Equity ASAP] *Only ETP* Holders [and ETP Firms] which are partnerships, limited liability partnerships, corporations or limited liability companies shall carry accounts for customers or conduct business under a firm name[, except that if by death or otherwise, an ETP Firm is reduced to the ETP Holder, such ETP Firm may continue business in the firm name for such a period only as may be allowed by the Corporation].

Sole Proprietors [and Individual ETP Holders]

[Rule 2.11] *Rule 2.10(a)* A sole proprietor *ETP Holder* may not carry public customer accounts.

[(b)–(c)—Deleted.]

[(d)]*(b) Sole proprietor* ETP Holders shall comply with such additional requirements as the Corporation may from time to time prescribe.

ETP [Firms and Equity ASAP Holders] *Holder Organizations*

[Rule 2.12] *Rule 2.11*[(a)—Deleted.]

[(b)] *(a)* Each ETP [Firm and Equity ASAP] Holder shall maintain at the Corporation at all times a record of the name and address of the individual duly authorized by such [Firm or] *ETP* Holder to receive and accept legal or other notices on its behalf.

[(c)] *(b)* An ETP [Firm or Equity ASAP] Holder shall adopt such restrictions on the conduct of its affairs as may be prescribed by the Corporation, including, without limitation, restrictions to the payment of dividends and loans to officers, directors, stockholders, partners or members.

Rule [2.13] *2.12.* An ETP [Firm or Equity ASAP] Holder that intends to admit any person to partnership, or to elect or appoint any person as an officer or director, or to enter into a partnership agreement, or to form a corporation or limited liability company or other entity, or to alter the terms of an existing partnership agreement or articles of incorporation or limited liability company agreement or other similar operating agreement shall notify the Corporation in writing of such proposed admission, arrangement, or alteration before said becomes effective and shall submit such papers and information and comply with such requirements in connection therewith as the Corporation may prescribe.

Rule [2.14] *2.13*

(a) Allied Persons and Approved Persons, as defined in Rule 1, shall be subject to approval by the Corporation. An ETP [Firm or Equity ASAP] Holder which proposes to admit an Allied Person or an Approved Person shall notify the Corporation in writing, shall pay any applicable fees and shall submit such information as may be reasonably required by the Corporation.

(b) In order to maintain its trading privileges, each ETP [Firm and Equity ASAP] Holder shall obtain approval from the Corporation for all persons required to be approved, and each such ETP [Firm and

Equity ASAP] Holder shall maintain continuous compliance with all standards prescribed by the Bylaws and Rules of the Corporation.

(c) Each ETP [Firm and Equity ASAP] Holder shall promptly give the Corporation written notice on such form as may be required by the Corporation of the death, retirement, or other termination of any ETP Holder, [Equity ASAP Holder,] Allied Person, Approved Person and of the dissolution of the ETP [Firm or Equity ASAP] Holder.

(d) Each ETP [Firm and Equity ASAP] Holder shall designate ''principal executive officers'' of such corporation who must[, in the case of ETP Firms,] be [ETP Holders or] Allied Persons, and who[, in either case,] must exercise supervision and control over the various areas of the business of such [Firm or] *ETP* Holder in such areas as the Rules of the Corporation may prescribe.

(e) Each ETP [Firm and Equity ASAP] Holder shall include in its name an appropriate identifier of its corporate or business association status, in English (e.g., Incorporated, Corporation, Limited Liability Company, Limited Liability Partnership, or an appropriate abbreviation thereof).

(f) The Corporation may require each applicant becoming a general partner, officer, voting stockholder, limited liability company member, or director of any ETP [Firm or Equity ASAP] Holder to pass an examination to demonstrate that they have adequate experience and knowledge of the securities business before undertaking any active duties with the firm. Compliance with this requirement may be waived if the principal is a member of an ETP [Firm or Equity ASAP] Holder belonging to another national securities exchange having comparable requirements.

(g) Each ETP [Firm] *Holder* shall be liable for all [of the] liabilities to the Corporation of [the ETP Holders, as the case may be, conferring his or her on their ETP trading privileges on the firm] *authorized traders,* which shall include, without limitation, the payment of all [Corporation] fees and charges as well as meeting all obligations accruing in the course of [the firm's (or its respective ETP Holders')] *an ETP Holder's or AT's* business with the Corporation.

(h) Each [ETP Holder, Equity ASAP Holder,] Approved Person, Allied Person, Affiliate, and Associated Person shall be liable to the same discipline and penalties for the acts and omissions of his or her ETP [Firm or Equity ASAP] Holder[, as the case may be,] as for their own acts.

(i) Claims of [ETP Holders, Equity ASAP Holders,] Affiliates, Allied Persons, directors, officers, and Associated Persons of an ETP [Firm or Equity ASAP] Holder shall be subordinate in right of payment to payment or provision for payment of all claims of customers of such ETP Holder[, ETP Firm or Equity ASAP Holder].

(j) Each ETP [Firm and Equity ASAP] Holder shall submit to the Corporation, at such times as the Corporation may require, an affidavit listing, to the best of its knowledge and belief, the name of each party directly or indirectly beneficially owning 1% or more of its outstanding voting stock and showing the percentage of such ownership.

(k) No parent or person controlling any parent of an ETP [Firm or Equity ASAP] Holder may engage in any transaction or action for the purpose of circumventing any Rule of the Corporation governing the activities of an ETP [Firm or Equity ASAP Holder, as the case may be.] *Holder.*

(l) ETP [Firms and Equity ASAP] Holders shall comply wit such additional requirements as the Corporation may from time to time prescribe.

Rule [2.15] *2.14.*

(a) Each ETP [Firm and Equity ASAP] Holder that is a partnership (whether general or limited) and which has only one general partner shall provide in its partnership agreement that:

(1)–(2)—No change.

(b) Upon the death or withdrawal of any partner, if the partnership business is continued by the surviving partners, the continuing partnership will not be recognized as an ETP [Firm or Equity ASAP] Holder[, as the case may be,] if the unsubordinated claim of the deceased or withdrawing partner to a return of such deceased or withdrawing partner's capital contribution would result in a net capital impairment of the continuing partnership. The continuing partnership will ordinarily be recognized as an ETP [Firm or Equity ASAP] Holder[, as the case may be,] during the period of subordination of such claim if subordination provisions substantially as follows are included in the partnership agreement:

Upon the death of a withdrawal of any partner, if the surviving partners desire to continue to the partnership business, the capital contribution of such deceased or withdrawing partner shall remain at the risk of the business and shall be considered capital of such continuing firm for a period of fifteen (15) calendar days to the extent necessary to comply with the net capital requirements of the Corporation. Any claim of the withdrawing partner or of the personal representative of the deceased partner to the repayment of such deceased or withdrawing partner's capital contribution during such period shall be subordinated to the payment in full of such claims of all present and future creditors of the continuing partnership arising out of any matters occurring before the end of such period.

[Terms and Conditions Relating to Equity ASAPs]

[Rule 2.16.—Deleted]

Responsibilities of Non-resident Firms

Rule [2.17.] *2.15*(a) An ETP [Firm or Equity ASAP] Holder that does not maintain an office in the United States responsible for preparing and maintaining financial and other reports required to be filed with the Securities and Exchange Commission and the Corporation must:

(1)—No change.

(2) Reimburse the Corporation for any expenses incurred in connection with examinations of the ETP Holder[, ETP Firm or Equity ASAP] Holder to the extent that such expenses exceed the cost of examining an ETP [Holder, ETP Firm or Equity ASAP] Holder located within the continental United States in the geographic location most distant from the principal office of the Corporation or, in such other amount as the Corporation may deem to be an equitable allocation of such expenses,

(3)—No change.

(4) Utilize, either directly or indirectly, the services of a broker/dealer registered with the Securities and Exchange Commission, a bank or a clearing agency registered with the Securities and Exchange Commission located in the United States in clearing all transactions involving persons affiliated with the ETP Holder [, ETP Firm or Equity ASAP Holder,] except where both parties to a transaction agree otherwise.

Amendments to ETP [Firm and Equity ASAP] Holder Documents

Rule [2.18.] *2.16*(a) All formation documents for ETP [Firms and Equity ASAP] Holders, such as articles of incorporation, by-laws, partnership agreements, limited liability company agreements, and all amendments thereto, now in effect or adopted in the future, shall be filed with the Corporation and shall be subject to approval by the Corporation.

(b) Each ETP [Holder, ETP Firm and Equity ASAP] Holder must submit to the Corporation any amendment to any document submitted as part of their application, including but not limited to amendments to documents required by Rule[ 4] *2.3,* amendments to the [permit holder's] *ETP Holder's* Form BD, and changes to the [permit holder's] *ETP Holder's* home or business address, within fifteen (15) business days of such amendment or change.

ETP Charges

Rule [2.19.] *2.17*(a) Securities and Exchange Commission Registration Fee: Section 31 of the Securities Exchange Act of 1934 imposes upon every national securities exchange the payment of a fee of 1/300th of 1 percentum of the aggregate dollar amount of the sales of securities transacted on the exchange, subject to some limitations. There shall be paid to the Corporation by each ETP Holder[, ETP Firm or Equity ASAP Holder] in such manner and at such times as the Corporation shall direct, Section 31 fees equal to the sum of one cent for each $300 or fraction thereof of the aggregate dollar amount of the sales of securities transacted by it through the Corporation, except in respect of transactions in securities which are direct obligations of or guaranteed as to principal or interest by the Untied States, or such securities issued, or obligations guaranteed by corporations in which the United States has a direct or indirect interest as may be designated for exemption therefrom by the Secretary of the Treasury. Such sum shall be paid by the selling ETP Holder[, ETP Firm or Equity ASAP Holder] as appearing on the comparison ticket of each transaction effected. The selling ETP [Holder, ETP Firm or Equity ASAP] Holder shall charge and collect such sum from the persons for whom he, she or it was acting in making the transaction. [Specialists] *Market Makers* shall pay such sum of both odd lots and round lots that they sell.

(b) Other Charges: In addition to transaction fees and the Securities and exchange Commission registration fee, the

Corporation may from the time fix and impose other charges or fees to be paid by ETP Holders[, ETP Firms and Equity ASAP Holders] for the use of equipment or facilities or for services or privileges granted.

Exemption from Registration Requirements

Rule [2.20.] *2.18.* An ETP [Firm or Equity ASAP] Holder shall be exempt from such registration requirements as the Corporation may designate if it is a member organization of another self-regulatory organization, which is the appointed Designated Examining Authority (''DEA'') for such organization by the Securities and Exchange Commission.

Termination of [Trading Privileges] ETP

[Rule 2.21] *Rule 2.19*(a) [Trading privileges conferred by an] An ETP [or Equity ASAP] will terminate upon the occurrence of any one of the following conditions:

(1) the expulsion of the ETP Holder[, ETP Firm or Equity ASAP Holder] from the Corporation's Trading Facilities;

(2) the suspension of the ETP Holder[,] *where such* ETP [Firm or Equity ASAP] Holder [where such Holder or Firm] failed to be reinstated at the expiration of the period of suspension, including any extension of such period which may have been granted by the Corporation;

(3) the formal or informal dissolution or winding up of an ETP [Firm or Equity ASAP] Holder;

(4)–(5)—No change.

(b) Obligations of Terminating ETP Holders[, ETP Firms and Equity ASAP Holders]: Every ETP [Firm, and Equity ASAP] Holder, and any successor-in-interest thereto, and each ETP [Holder and Equity ASAP] Holder whose trading privileges are terminated due to expulsion, suspension without reinstatement, death, declaration of incompetency, dissolution, winding up, or other cessation of business, must be current in all filings and payments of dues, fees and charges relating to that ETP [or Equity ASAP, as the case may be], including, without limitation, filing fees and charges required by the Securities and Exchange Commission and the Securities Investor Protection Corporation. if any ETP Holder, [ETP Firm, or Equity ASAP Holder,] or any successor-in-interest thereto, fails to make all such filings, or to pay all such dues, fees and charges, the Secretary of the Corporation shall retain such jurisdiction over such former ETP Holder[, ETP Firm or Equity ASAP] Holder to require such filings and collect such outstanding dues fines and charges until such time as they have been filed and/or paid.

[(c)—Deleted.]

Limited Transferability

Rule [2.22] *2.20*(a) Transfer by Purchase, Sale or Lease Prohibited. ETPs [and Equity ASAPs] may not be purchased (other than from the Corporation), sold or leased. Any purported purchase (other than from the Corporation), sale or lease of an ETP [or Equity ASAP] shall be void abe inition within further action by the Corporation.

(b) Private Transfer Void: An ETP [Holder, ETP Firm or Equity ASAP] Holder which attempts to transfer an ETP [or Equity ASAP] by private sale or lease, or otherwise, may be adjudged guilty of conduct detrimental to the interest and welfare of the Corporation, and any purported transfer shall be void ab initio without further action by the Corporation and will confer no rights upon the purported transferee.

[(c)—Deleted.]

Employees of ETP [Firms and Equity ASAP] Holders Registration

Rule [2.23] *2.21*(a) Every employee, including *any* branch office [*managers*] *manager*, of an ETP [Firm or Equity ASAP] Holder who is compensated directly or indirectly for the solicitation or handling of business in securities, including trading in securities for the account of the organization, whether such securities are those dealt in on the Corporation or those dealt in over-the-counter, must be registered with an approved by the Corporation.

The Corporation may waive compliance with the requirements of Rule [2.23(a)] 2.21(a) in the event the ETP [Firm or Equity ASAP] Holder is also a member organization of another national securities exchange having comparable requirements.

(b)–(c)—No change.

(d) A registered employee may not be engaged in any other business or be employed by another employer in any capacity or receive compensation, without the prior written and continuing approval of his or her ETP Holder[, ETP Firm or Equity ASAP Holder, as the case may be,] and such registered employee shall devote a substantial portion of the business day to the activities of his or her [Firm or] *ETP* Holder.

(e) No ETP [Holder, ETP Firm or Equity ASAP] Holder may employee any employee of the Corporation during the hours of regular employment by the Corporation. No ETP [Holder, ETP Firm or Equity ASAP] Holder may employ any employee of the Corporation outside the hours of regular employment by the Corporation without having obtained the prior, written approval therefore of the Corporation and registering therewith the name of said employee, the nature of the services rendered and the amount of said compensation.

(f) No ETP [Holder, ETP Firm or Equity ASAP] Holder shall give any compensation or gratuity in any one calendar year in excess of $100 to any employee of any other ETP Holder, [ETP Firm or Equity ASAP Holder,] to ro any employee of a broker or dealer, bank or institution that is not an ETP Holder, [ETP Firm or Equity ASAP Holder,] without the prior consent of the employee's employer.

(g) No ETP [Holder, ETP Firm or Equity ASAP] Holder shall give any compensation to any officer, director, employee or other agent of the Corporation without the prior written consent of the Corporation. No ETP [Holder, ETP Firm or Equity ASAP] Holder shall give any gratuity or gift in any one calendar year in excess of $100 to any officer, director, employee or other agent of the Corporation without the prior written consent of the Corporation. All requests for such consent should contain the following information.

(1)–(5)—No change.

(h) Termination of the employment of a registered employee shall be reported to the Corporation, and the Corporation shall be notified in writing of the specific grounds for termination immediately when the employment of any persion is terminated by an ETP Holder[, ETP Firm or Equity ASAP Holder] under circumstances involving misconduct, fraud or unethical practices.

[Trading Floor Employees of ETP Firms]

[Rule 2.24—Deleted.]

Managatory Decimal Pricing Testing

Rule [2.25] *2.22*(a)[(1)]. *Point-to-Point Testing.* Each ETP Holder[, Equity ASAP Holder or ETP Firm] that has an electronic interface with the Corporation must participate in point-to-point testing with the Corporation of its computer systems designed to ascertain decimal pricing conversion compatibility of those computer systems, in a manner and frequency as prescribed by the Corporation. An ETP Holder[, Equity ASAP Holder or ETP Firm) that has its electronic interface through a service provider need not participate in point-to-point testing if, by a time designated by the Corporation.

[(A)] *(1)* The service provider conducts successful tests with the Corporation on behalf of the firms it serves.

[(B)] *(2)* The ETP Holder[, Equity ASAP Holder or ETP Firm] conducts successful point-to-point testing with the service provider and

[(C)] *(3)* The Corporation agrees that further testing is not necessary.

[(2)] *(b) Industry Wide Testing.*The Corporation may require certain of its ETP Holders[, Equity ASAP Holders or ETP Firms] to participate in industry wide testing of computer systems for decimal pricing conversion. The Corporation may require any ETP Holder[, Equity ASAP Holder or ETP Firm] who will participate in industry wide testing to also participate in any tests necessary to ensure preparedness to participate in industry wide testing.

[(3)] *(c) Reports.* ETP Holders[, Equity ASAP Holders or ETP Firms] participating in point-to-point testing (whether between the firm and the Corporation, between the firm and its service provider, or between the ETP Holder's[, Equity ASAP Holder's or ETP Firm's] service provider and the Corporation) or industry wide testing must file reports with the Corporation concerning the required tests in the manner and frequency required by the Corporation.

[(4)] *(d)* Documentation. ETP Holders[, Equity ASAP Holders or ETP Firms] must maintain adequate documentation of tests required by this Rule and the results of such testing for examination by the Corporation.

Commentary

.01 This rule will expire automatically upon the full implementation fo decimal pricing.

*Transition*

*Rule 2.100. Any PCX member, as defined in the PCX Parent Rule 1.1, or Equity ASAP Holder that wishes to continue to effect securities transactions without interruption of the Corporation's Trading Facilities must obtain an ETP prior to the first day the Archipelago Exchange becomes operational. If the PCX members or equity ASAP Holder fails to obtain an ETP prior to the first day*

*the Archipelago Exchange becomes operational, the PCX member or equity ASAP holder will not be permitted to effect securities transactions on the Corporation's Trading Facilities until such PCX member of Equity ASAP Holder obtains an ETP.*

**Rule 3**

**Organization and Administration**

**Part I—Committees of the Corporation**

Overview

Rule 3.1(a).—No change.

Equity Committees

Rule 3.2.

(a) General Provisions:

(1)–(7)—No change.

(8) Eligibility for and Appointment to Equities Committees. Any ETP [Holder and Equity ASAP] Holder of the Corporation in good standing or allied person of an ETP [Firm or Equity ASAP] Holder, or any person from the public is eligible for appointment or election to Equity Committees. Only one person affiliated with the same ETP [Firm or Equity ASAP] Holder shall be eligible for service on the same Equity Committee. Except as otherwise set forth in these Rules, the Chief Executive Officer of the Corporation shall appoint eligible ETP Holders [, Equity ASAP Holders] and persons from the public to the positions so allocated on Equity Committees for terms of one (1) year.

(9) Alternate Members. The Chief Executive Officer of the Corporation may designate one or more ETP Holders, [Equity ASAP Holders,] an allied person of an ETP [Firm or Equity ASAP] Holder, and persons from the public as alternate members of any Equity Committee, who may replace any absent or disqualified member at any meeting of such committee.

(10)–(11)—No change.

(b) Equity Committees. As set forth below, the Board of Directors has delegated certain authority and functions to its committees. Action taken pursuant to delegated authority, however, is subject to review, ratification or rejection by the Board of Directors.

(1) Business Conduct Committee.

(A) Composition. In addition to any members of the public on the Business Conduct Committee, the Business Conduct Committee shall have [proportional representation of all (i) ETP Holders and ETP Firms and (ii) Equity ASAP Holders, with] a minimum of one ETP Holder or allied person of an ETP [Firm and one Equity ASAP] Holder [or allied person of an Equity ASAP Holder].

(B) Functions and Authority. The Business Conduct Committee shall, in accordance with the Bylaws, Rules and procedures of the Corporation, have the following functions and authority:

(i) Examine the business conduct and financial condition of ETP Holders [, ETP Firms, Equity ASAP Holders,] and associated persons;

(ii)–(iii)—No change.

(iv) Require the production of detailed financial reports of an ETP Holder[, ETP Firm, or ASAP Holder] and such other operational reports as it may deem relevant.

(C) This Committee shall have authority, whenever it appears that an ETP [Firm, ETP Holder, or Equity ASAP] Holder is in violation of Rule 4, to direct a representative of such ETP [Firm, ETP Holder, or Equity ASAP] Holder to appear before the Committee for examination upon 48 hours notice, either orally or in writing. After such examination, the Committee shall have authority to suspend such ETP [Firm, ETP Holder, or Equity ASAP] Holder until the requirements of Rule 4 are fully met. Any such suspension directed by the Committee shall be subject to review by the Board. Such review shall not operate as a stay of the suspension unless specifically allowed by the Board. In the event of a reversal of the suspension imposed by the Committee, an ETP [Firm, ETP Holder, Equity ASAP] Holder or officer, partner, director, stockholder, or representative thereof shall be prohibited from instituting a lawsuit in any forum against the Corporation or the members of the Committee, based in whole or in part upon the suspension imposed by the Committee.

(D)—No change.

(2) Nominating Committee.

(A) Composition. The Nominating Committee shall have seven members consisting of six ETP Holders [and/or Equity ASAP Holders] and one person from the public. [The six ETP Holders and/or Equity ASAP Holders on the Nominating Committee shall represent proportionally all (i) ETP Holders and ETP Firms and (ii) Equity ASAP Holders, with a minimum of one ETP Holder or allied person of an ETP Firm and one Equity ASAP Holder or allied person of an Equity ASAP Holder.]

(B) Nomination, Appointment and Election.

(i) Nomination. Sixty-five days prior to the expiration of the term of its members, the Nominating Committee shall publish a slate of six eligible nominees to fill the positions during the next annual term of the Nominating Committee. ETP [Holders and Equity ASAP] Holders in good standing may submit a petition to the Corporation in writing to nominate additional eligible candidates to fill [ETP/Equity ASAP] *ETP* positions during the next annual term, and upon written petition of at least 10 percent of ETP Holders [and Equity ASAP Holders, considered as one group,] in good standing on or before the forty-fifth day preceding the expiration of the existing term such person(s) shall also be nominated by the Nominating Committee.

(ii)—No change.

(iii) Election. In the event that ETP Holders [or Equity ASAP Holders], or allied persons of an ETP [firm or Equity ASAP] Holders, are nominated by the Nominating Committee pursuant to petition by the ETP Holders [and/or Equity ASAP Holders], and there are more than six nominees to fill the [ETP/Equity ASAP] *ETP* Holders positions on the Nominating Committee, the Nominating Committee shall submit the nominees to the ETP Holders [and the Equity ASAP Holders], collectively for election. Each ETP [Holder and Equity ASAP] Holder in good standing shall be permitted to vote for up to six nominees and the six nominees receiving the most votes shall fill the [ETP/Equity ASAP] *ETP* positions as members during the next annual term of the Nominating Committee. Tie votes shall be decided by the Board of Directors at its first meeting following the election.

(iv) Acclamation of Slate. In the event there are only six nominees to fill the [ETP/Equity-ASAP] *ETP* positions on the Nominating Committee on or after the forty-fifth day prior to the expiration of the terms of the outgoing Nominating Committee, those six nominees shall be deemed elected to the next annual term of the Nominating Committee.

(C) Representatives to the Board of Directors of the Corporation and the Board of Governors of the Pacific Exchange, Inc.

(i) Nomination. Sixty-five days prior to the expiration of the term of its Directors, the Nominating Committee shall publish the names of two (2) ETP Holders, [Equity ASAP Holders,] or persons affiliated with such Holders (in any combination) as its nominees for the Board of Directors of the Corporation and one ETP Holder, [Equity ASAP Holder,] or allied [persons] *person* of an ETP [Firm or Equity ASAP] Holder, as nominee for the Board of Governors of the Pacific Exchange, Inc. The nominee for the Board of Governors may be a person nominated to the Board of Directors. ETP [Holders and Equity ASAP] Holders in good standing may submit a petition to the Corporation in writing to nominate additional eligible candidates to fill [ETP/Equity ASAP] *ETP* positions during the next term, and upon written petition of at least 10 percent of ETP Holders [and Equity ASAP Holders, considered as one group,] in good standing on or before the forty-fifth day preceding the expiration of the existing term such person(s) shall also be nominated by the Nominating Committee.

(ii) Selection of Nominees. In the event that [ETP/Equity ASAP] *ETP* positions are nominated by the Nominating Committee pursuant to petition by the ETP Holders [and Equity ASAP Holders], and there are three or more nominees for the Board of Directors or two or more nominees for the Board of Governors, the Nominating Committee shall submit the contested nomination(s) to the ETP Holders [and Equity ASAP Holders, considered as one group,] for selection. Each ETP [Holder and Equity ASAP] Holder in good standing may select two nominees for contested seats on the Board of Directors and one nominee for contested seats on the Board of Governors. With respect to contested positions, the two nominees for the Board of Directors and the nominee for the Board of Governors selected by the most ETP Holders [and Equity ASAP Holders, considered as one group,] shall be submitted by the Nominating Committee to the Board of Directors of the Corporation or the Board of Governors of the Pacific Exchange, Inc., as the case may be. Similarly, the Nominating Committee shall submit uncontested nominees to the Board of Directors of the Corporation or the Board of Governors of the Pacific Exchange, Inc., as the case may be. Tie votes shall be decided by the respective Board at its first meeting following the election.

(3)—No change.

(c)—No change.

Board Committees

Rule 3.3(a). Board Committees.

(1) Board Appeals Committee.

(A) Composition. The Board of Directors may appoint one or more Appeals Committees to conduct reviews of matters subject to the applicable provisions of Rule 3.2b(b)(1)(C), 5 or 10. The Board of Directors will determine the size of any Appeals Committee that it appoints. Each Appeals Committee will contain at least one public director and at least one director that is an ETP Holder[,] *or* allied person of an ETP [Firm, Equity ASAP] Holder [or allied person of an Equity ASAP Holder].

(B)—No change.

**Part II—Regulation**

Self-Regulatory Responsibilities

Rule 3.4. The Pacific Exchange, Inc. (''PCX Parent''), as a self-regulatory organization registered with the Securities and Exchange Commission pursuant to Section 6 of the Exchange Act, shall have ultimate responsibility in the administration and enforcement of rules governing the operation of its subsidiary, PCX Equities, Inc. (''Corporation''). Notwithstanding the delegation of authority to the subsidiary, as set forth below in Rule 3.5, the PCX Parent shall review and ratify any rule change adopted by *the* Board of Directors of the Corporation before such rule change becomes the final action.

Delegation of Authority

Rule 3.5(a). Except as otherwise provided in the Bylaws, Rules and procedures of the Corporation, the Chief Regulatory Officer or such other designated officer of the Corporation shall have the following delegated authority.

(1) To establish and interpret rules and regulations for ETP Holders[, Equity ASAP Holders, ETP Firms,] or associated persons including, but not limited to trading rules, fees, access to and use of system facilities, and arbitration procedures.

(2) To determine regulatory and trading policies, including the development and adoption of necessary or appropriate rule changes, relating to the business conduct and trading activities of ETP Holders[, Equity ASAP Holders, ETP Firms,] and associated persons. This includes, but is not limited to, the following:

(A) Arbitration of disputes between ETP Holders[, Equity ASAP Holders, ETP Firms,] or associated persons arising from transactions on the facility;

(B) Financial responsibility;

(C) Clearance and settlement of securities transactions and other financial responsibility and operational matters affecting ETP Holders[, Equity ASAP Holders, ETP Firms,] or associated persons in general; and

(D) Qualification requirements for ETP Holders[, Equity ASAP Holders, ETP Firms,] and associated persons.

(3)—No change.

(4) To administer programs and systems for the surveillance and enforcement of rules governing the conduct and trading activities of ETP Holders[, Equity ASAP Holders, ETP Firms,] and associated persons.

(5)—No change.

(6) To examine and investigate ETP Holders[, Equity ASAP Holders, ETP Firms,] and associated persons to determine if they have violated the Rules and procedures of the Corporation, the federal securities laws, and other laws, rules, and regulations that the Corporation has the authority to administer, interpret, or enforce.

(7) To place restrictions on the business activities of ETP Holders[, Equity ASAP Holders, ETP Firms,] and associated persons consistent with the public interest, the protection of investors, and the federal securities laws.

(8)—No change.

(9) To appoint [Trading Officials] *staff, as necessary,* that shall be responsible for the general supervision of the conduct and dealings of ETP Holders[, Equity ASAP Holders, ETP Firms,] and associated persons on the trading [facility] *facilities.* These duties include, but are not limited to, the following:

(A) Arbitrate differences between ETP Holders[, Equity ASAP Holders, ETP Firms,] or associated persons arising from transactions on the trading [facility] *facilities*;

(B) Supervise all connections or means of communication with the trading [facility] *facilities,* which may require the discontinuance of any such connection or means of communication that is deemed contrary to the welfare or interest of the Corporation;

(C) Issue a [Floor Citation] *citation* when it appears that a Minor Rule Plan violation has occurred as specified in Rule 10;

(D) Declare a ''fast [market'' or] *market,''* invoke a trading halt in a security due to an influx of orders or other unusual market conditions or circumstances[. Take]*, or take* such other actions as are deemed necessary in the interest of maintaining a fair and orderly market; and

(E) Supervise and regulate the operation of ITS, or any other application of the system during active openings, heavy trading and unusual situations.

(10) To administer or enforce policies and Rules of the Corporation [(including] (*as well as* federal and state regulations) governing the initial and continued listing or trading of securities on the Corporation.

Surveillance Agreements

Rule 3.6.—No change.

**Part III—Dues, Fees and Fines**

Dues, Fees and Charges

Rule 3.7. ETP Holders[, ETP Firms, and Equity ASAP Holders] of the Corporation, whether or not in good standing, shall pay to the Corporation such dues, fees and charges as the Board of Directors shall prescribe.

Liability for Payment

Rule 3.8. An ETP Firm or Equity ASAP Holder] failing to pay any dues, fees, charges or fines to the Corporation for thirty days after the same shall become payable, may be suspended by the Board of Directors or the Chief Executive Officer of the Corporation in accordance with Rule 11.2.

Fines

Rule 3.9.—No change.

**Rule 4**

**Capital Requirements, Financial Reports, Margins**

**Section 1. Capital Requirements**

Minimum Net Capital

Rule 4.1[(a). To the extent applicable, every ETP Holder, ETP Firm and Equity ASAP Holder]. *ETP Holders that are subject to Rule 15c3 under the Securities Exchange Act of 1934 (''Exchange Act''), as amended,* shall maintain a minimum net capital in accordance with the provisions of Rule 15c3–1 under the [Securities] Exchange Act [of 1934 (''Exchange Act''), as amended. For]. *Each* ETP [Holders and ETP Firms, this requirement is in addition to the requirements of Rule 4.2 (Specialist Post Capital). Each ETP Holder, ETP Firm and Equity ASAP] Holder shall promptly notify the Corporation and, pursuant to the provisions of Rule 17a–11 under the Exchange Act, the Securities and Exchange Commission if such ETP [Holder, ETP Firm or Equity ASAP] Holder's net capital does not equal or exceed the appropriate minimum required by Rule 15c3–1 or if notice is otherwise required by Rule 17a–11.

[(b)–(c)—Deleted.]

[(d)] Each [specialist firm] *Market Maker* shall report its net capital to the Corporation in a form and manner prescribed by the Corporation.

Commentary

.01 ETP [Firms] *Holders* Who Do Not Carry Customers' Accounts

An ETP Holder[, Equity ASAP Holder or ETP Firm] operating under paragraph (a)(2) of SEC Rule 15c3–1 shall file a written application with the Corporation for approval on a form prescribed by the Corporation.

.02 Trading in Gold and Silver Bullion:

(a) Where gold or silver bullion, which upon payment to the seller is within the ETP [Firm's] *Holder's* control in good deliverable form and covered by appropriate insurance, is purchased by customers under agreements wherein full payment is required and is made within seven business days after the date of purchase, or full payment is required and made within an extended or longer period of time as approved by the Corporation upon application, such purchases may be considered bona fide cash transactions which require no deduction from net worth in computing net capital. In all other purchases by customers of such gold or silver bullion, which liquidate to an equity, cash required, if any, to provide margin equal to 25% (10% if hedged by futures contracts in the same commodity) of the market value of the gold or silver bullion in each such customer's account in equity shall be deducted from net worth in computing net capital.

(b) If upon payment to the seller, gold or silver bullion purchased by customers and paid for by them is not within the ETP [Firm's] *Holder's* control in good deliverable form and covered by appropriate insurance, the market value of such gold or silver bullion shall be deducted from net worth in computing net capital so long as the ETP [Firm] *Holder* is accountable therefore. If upon payment to the seller, gold or silver bullion purchased for a proprietary account

is not within the ETP [Firm's] *Holder's* control in good deliverable form and covered by appropriate insurance, such gold or silver bullion shall be considered to have no market value for purposes of net capital.

(c) Definitions:

(1) ''Within the ETP [Firm's] *Holder's* Control''

Gold or silver in bullion form, identified by serial number or otherwise, and subject to immediate disposition at the direction of the [member firm] *ETP Holder.*

Storage arrangements acceptable to insurance carriers will satisfy the Corporation provided the coverage complies with the ''appropriate insurance'' requirement discussed below. While the Corporation will not specify acceptable bullion depositories to [ETPs] *ETP Holders,* certain custodial requirements must be satisfied whenever gold or silver bullion is stored in outside depositories. The ETP [Firm] *Holder* shall satisfy itself that the depository will maintain physical possession or control of the bullion stored for its customers free of any lien or claim on such bullion other than that arising out of, and limited to the extent of, any margin transaction or other unpaid for transaction. Records shall be maintained to separately identify customer pledged gold and silver bullion subject to lien from that customer bullion not pledged and fully paid for. The ETP [Firm] *Holder* shall include as part of a written agreement with the depository such other protections as may be deemed necessary. ETP [Firms] *Holders* considering the utilization of foreign depositories are cautioned to familiarize themselves with foreign laws on banking and bankruptcy to insure compliance with this paragraph, since these laws may differ significantly from those of the United States.

(2)—No change.

(3) ''Appropriate Insurance''

All gold or silver under the control of an ETP [Firm] *Holder,* whether stored in a depository, in its own custody, in transit, or in any other location, within the ETP [Firm's] *Holder's* control, shall be covered by insurance of the ETP [Firm] *Holder.*

''Appropriate insurance'' is defined to mean inclusion of gold and silver bullion as covered property under a broker's blanket bond as required by Rule 2, subject to the following additional criteria which specifically apply to gold and silver bullion wherever stored:

(A) That gold and silver stored meets the ETP [Firm's] *Holder's* insurance carrier's standards including specific identification so as to preclude non-coverage as an inventory loss;

(B) that gold and silver bullion be insured at full market value when in transit;

(C) that no dollar amount of gold and silver bullion stored in depository exceed the sum of the ETP [Firm's (a)] *Holder's (i)* insurance coverage and [(b)] *(ii)* excess net capital; and

(D) that the value of any bullion stored in a depository and in transit in excess of the sum of [(iii)(a)] (C)(i) and [(b)] (ii) is charged to net capital. (The ETP [Firm] *Holder* may, should it wish, avoid this capital charge by acquiring separate insurance to fully cover bullion exceeding the amount in the broker's blanket bond.) ETP [Firms] *Holders* shall file with the Corporation copies of letters from its insurance underwriters setting forth the extent of its coverage for bullion stored in its depositories.

(d) Further Customer Protections—To further ensure protection of customers of [member organizations, the Exchange] *ETP Holders, the Corporation* has established the following guidelines:

(1) Disclosure to Customer

The ETP [Firm] *Holder* shall fully disclose to its customer all relevant information pertaining to a transaction, including, but not limited to, names and locations of depositories, insurance coverage, charges incidental to storage, requirements and costs related to taking physical delivery of the bullion (e.g., possible need for assay), and applicable [Federal] *federal,* state or local laws or regulations (e.g., sales tax implications of the purchase). Communications to the public with regard to gold and silver shall state that SIPC coverage is not available. Due to the varying degrees of fineness, and the need for the customer to be informed as to the quality of bullion being purchased and its attendant variation in price, the fineness, weight, price per ounce, and any markup, commissions, fees, taxes or other costs shall be disclosed to the customer. Salesmen must convey to each customer the special risks and expenses involved in investing in gold and silver bullion. In particular, the customer must be given the opportunity to take delivery of the gold or silver and be informed whether or not the [member organization] *ETP Holder* will buy it back at a later date, and if so, on what basis.

(2) Sale or Saleback of Gold and Silver

All sales of gold and silver bullion shall be long, whether for customer or proprietary accounts.

Under no circumstances shall [a member organization] *an ETP Holder* release the proceeds of sale of gold or silver to a customer unless the customer's gold or silver has been assayed by an acceptable assayer (as defined above) or is in a form acceptable to such assayer. Gold or silver which is to be sold should be within an ETP [Firm's] *Holder's* control before it is sold, but in no event later than two business days after the trade date. An ETP [Firm] *Holder* may, however, submit a plan for review by the Corporation, the effect of which would allow a customer longer than two days to deliver the bullion within the ETP [Firm's] *Holder's* control on a ''buy-back'' transaction, where the customer is selling bullion originally purchased from that ETP [Firm] *Holder.*

(3)—No change.

(e) Cash Transactions—Purchases of gold or silver bullion in a customer's cash commodity account must be paid for as promptly as possible, but no later than the fifth business day after the date of purchase. A charge against capital will result if full payment has not been received by the seventh business day after purchase.

Although the amendment allows ETP [Firms] *Holders* to request extensions of time for payments not received within seven business days, the Corporation does not anticipate granting any such extension except in rare cases.

Extension requests should be submitted in letter form, giving the full particulars of the transaction, the customer's name and ID number, the reason for the request, and any other pertinent data. The letter should be signed by an authorized individual or officer. These extension requests will be handled separately from securities extensions, but will, as mentioned above, be restrictly granted.

(f) Margin Transactions—Required margin shall be furnished within five business days after date of purchase or made within an extended or longer period of time as approved by the Corporation upon application.

Extension requests on margin transactions will be subject to the same requirements applicable to cash transactions.

(1) Initial Margin

For the [purchase] *purpose* of effecting new transactions, the margin required shall be an amount equivalent to the requirements stated below, or such greater amounts as the Corporation may from time to time require, with an minimum equity in the account of at least $2,000, except that cash need not be deposited in excess of the cost of any new transaction.

Withdrawals of cash or spot commodities may be made, provided that after such withdrawal the equity in the account is at least the greater of $2,000 or the amount required by the maintenance requirement stated below.

(2) Maintenance

Margin must be maintained in margin accounts of customers, including [members, Allied members, organization or nonmembers] *ETP Holders, Allied Persons thereof and non-ETP Holders* and shall be as follows:

(A) 25% of the market value of gold or silver spot commodities ''long'' in each customer's account, or

(B) 10% of the market value of the gold and silver spot commodities if ''hedged by futures contracts'' in the same commodity. Gold or silver bullion which is carried on margin for customers must be within the control of the [member organization] *ETP Holder,* in good deliverable form and covered by appropriate insurance.

(g) Records—ETP [Firms] *Holders* shall make, keep current and preserve books and records on spot commodities as are required for securities.

(h) Conduct of Accounts—Rule 9 requires the diligent supervision of accounts. All information requirements or assessments applicable to other customers' accounts shall apply to customers effecting transactions in gold or silver bullion.

ETP [Firms] *Holders* should give serious consideration to securing an adequate deposit before executing any customer orders for gold. This will serve to demonstrate the customer's ability to consummate the transaction as well as protecting the [member organization] *ETP Holder* from potential market fluctuations in the event of customer default. Upward variations in deposit may be advisable for new customers, or when the ETP [Firm] *Holder* anticipates unusual volatility in the price of gold.

Currently, international settlement of spot gold transactions take place on the second

business day following the order. Accordingly, ETP [Firms] *Holders* will have to pay for or deliver gold on that second business day. In view of this fact, ETP [Firms] *Holders* are hereby put on notice that good business practice would in most instances, require substantial cash deposits in advance of all purchases of gold or silver.

(i) Business Plan—An ETP [Firm] *Holder* shall file with the Corporation a detailed business plan for approval by the Corporation prior to effecting any transactions in gold or silver bullion. Such a plan shall comply with the standards enunciated herein, and the ETP [Firm] *Holder* may utilize the below checklist in drafting its business plan.

(j) Gold and Silver Business Plan Checklist:

(1) Structure and Nature

(A) Will activities be processed through the ETP [Firm] *Holder* subsidiary, affiliate, holding company, or joint venture? Name the affiliate/subsidiary responsible for bullion business, if applicable.

(B)—No change.

(C) Will the organization position bullion for its own account and/or act as a [market maker] *Market Maker?*

(D)–(F)—No change.

(2) Legal Review

(A)—No change.

(B) Has the organization requested counsel to review the plan for compliance with other [Federal] *federal,* state or local applicable laws?

(C)–(10)—No change.

(3)–(10)—No change.

[.03—Deleted.]

[Specialist Post Capital]

[Rule 4.2—Deleted.]

*Rule 4.2. Reserved.*

Corporate Affiliates and Subsidiaries

Rule 4.3(a). An ETP [Firm or Equity ASAP] Holder shall not a corporate affiliate or subsidiary without the prior written approval of the Corporation. All affiliates or subsidiaries of an ETP [Firm or Equity ASAP] Holder shall be subject to compliance with the Bylaws, Rules and procedures of the Corporation, or other conditions as may be established by the Corporation. ETP Holders[, Equity ASAP Holders,] and Allied Persons of ETP [Firms or Equity ASAP] Holders shall be responsible for any fraud committed by a corporation affiliate or subsidiary organization or for any act or proceeding thereof contrary to just equitable principles of trade or detrimental to the interest or welfare of the Corporation.

An ETP [Firm or Equity ASAP] Holder proposing to organize an affiliate or subsidiary corporation shall submit full details to the Corporation.

[The above] Rule *4.3* shall apply to all ETP [Firms or Equity ASAP] Holders of the Corporation unless the ETP [Firm or Equity ASAP] Holder is subject to the jurisdiction of another national securities exchange or association designated by the Board of Directors as having comparable standards, or it is subject to the jurisdiction of another national securities exchange or association designated by the Securities and Exchange Commission as the primary regulatory body.

Changes in Stockholder Status

Rule 4.3(b). Whenever a person owning 5% or more of any class of equity securities, directly or indirectly, of an ETP [Firm or an Equity ASAP] Holder ceases to be an ETP Holder, [Equity ASAP Holder,] Allied Person or Approved Person, the firm shall redeem or convert such securities to fixed income securities so that such security interest is less than 5%. Provided, however, that if such redemption or conversion would cause such ETP [Firm or Equity ASAP] Holder not to comply with the capital requirement of Rule 4, the ETP [Firm or Equity ASAP] Holder will so notify the Corporation and the assets which the person receives upon redemption of such securities, will be loaned by the person to the ETP [Firm or Equity ASAP] Holder as a loan subordinated to the claims of all customers and general creditors of the ETP [Firm or Equity ASAP] Holder, or the fixed income securities which the person receives upon conversion of such securities will be subordinated to the claims of all customers and general creditors of the ETP [Firm or Equity ASAP] Holder. Any such subordination shall be pursuant to an agreement approved by the Corporation.

Trading in Firm's Securities

Rule 4.3(c). An ETP [Firm or Equity ASAP] Holder shall not trade in (except on an unsolicited basis) or make recommendations with respect to its own securities or those of its parents or affiliates (other than registered investment companies) and any parents or affiliates of an ETP [Firm or Equity ASAP] Holder shall not trade in (except on an unsolicited basis) or make recommendations with respect to its own securities or those of its affiliates, or those of the ETP [Firm or Equity ASAP] Holder (other than registered investment companies).

Change in Capitalization

Rule 4.3(d). No ETP [Firm or Equity ASAP] Holder shall make any change in its capitalization without prior written approval of the Corporation.

Owners of 5% or More Equity Securities

Rule 4.3(e). Every party who owns beneficially 5% or more of any class of equity security, either directly or indirectly, of the firm shall be an ETP [Firm or Equity ASAP] Holder,] Allied Person or Approved Person.

Conditions for Issuance of Freely Transferable Securities

Rule 4.3(f). ETP [Firm or Equity ASAP] Holders which issue freely transferable securities must maintain a ratio of not more than 50 percent of property subordinated debt equity (including common and preferred stock) after giving the effect to any public financing, and ETP [Firm or Equity ASAP] Holders or parents thereof which issue freely transferable securities must:

(1)—No change.

(2) Have two years of operations by the ETP [Firm or Equity ASAP] Holder as a bona fide broker-dealer.

(3)—No change.

(4) Pay a filing fee for approval by the Corporation of the ETP [Firm's or Equity ASAP] Holder's issuance of freely transferable securities.

Rule 4.3(g). Reserved.

Voting Agreement

Rule 4.3(h). None of the stock of a corporate ETP [Firm or Equity ASAP] Holder shall at any time be held under or subject to any voting agreement whereby the voting of such stock is pooled or joined with the stock of any then ETP Holder, [ETP Firm Equity ASAP Holder,] Allied Person, stockholder associate or Approved Person unless approved by the Board of Directors.

Participation in ETP [Firms] *Holders*

Rule 4.3(i). The Corporation hereby specifically approves the beneficial ownership of an interest in any other ETP [Firm or Equity ASAP] Holder by an ETP Holder, [Equity ASAP Holder,] Allied Person, or Approved Person of any ETP [Firm or Equity ASAP] Holder.

(1)–(2)—No change.

(3) In connection with his, her or its activity as a [market maker] *Market Maker* in such stock, in which event the ETP Holder[, ETP Firm or Equity ASAP Holder] or Allied Person, or Approved Person thereof shall be required to be registered with the Corporation as a [market maker] *Market Maker* in such stock.

Restrictions on ETP [and Equity ASAP] *Holder* Activities

Rule 4.4 The Corporation may restrict the conduct of an ETP [Holder's, ETP Firm's or Equity ASAP] Holder's activities if at any time the ETP [Firm or Equity ASAP] Holder appears to be approaching financial difficulties or appears to be experiencing difficulties in its daily operations.

(a) The Corporation may implement the provisions of Paragraph (b) of this Section if it determines the existence of one or more of the following conditions:

(1) The ETP [Holder, ETP Firm or Equity ASAP] Holder fails to maintain net capital, above requirements of Rule 4, equivalent to the greater of (i) one-half of the losses of an ETP [Holder, ETP Firm or Equity ASAP] Holder in the twelve-month period immediately preceding the date of such computation, or (ii) the loss experienced by the ETP [Holder, ETP Firm or Equity ASAP] Holder in the six-month period immediately preceding such computation.

In determining profit or loss, the ETP [Holder, ETP Firm or Equity ASAP] Holder shall mark its trading accounts to the market, and, its expenses shall reflect, among other things, all partners' drawings and salaries, and appropriate amounts for assets doubtful of collection.

(2) The ETP [Holder, ETP Firm or Equity ASAP] Holder has subordinated capital which will mature within the next 180 days, and which, if not renewed, would cause (i) the ratio of aggregate indebtedness to net capital to exceed 12 to 1, or, in the case of an ETP [Holder, ETP Firm or Equity ASAP] Holder which is operating pursuant to paragraph (f) of SEC Rule 15c3–1 (Alternative Net Capital Requirement), net capital to be less than 6% of the aggregate debits; (ii) a reduction in excess of net capital below the standard set forth in subparagraph (1) of this Section, or (iii) a reduction in net capital below 120% of the minimum required net capital.

(3) The ETP [Holder, ETP Firm or Equity ASAP] Holder has experienced a reduction in net capital of 15% in the preceding month or 30% in the three-month period immediately preceding such computation, other than as a result of increased capital haircuts on firm proprietary securities positions.

(4) The ETP [Holder's, ETP Firm's or Equity ASAP] Holder's net capital is less than $1,000,000 and (i) its ratio of aggregate indebtedness to net capital equals or exceeds 8 to 1, or (ii) its net capital is less than 150% of the minimum required net capital.

(5) The ETP [Holder's, ETP Firm's or Equity ASAP] Holder's net capital equals or exceeds $1,000,000 and (i) its ratio of aggregate indebtedness to net capital equals or exceeds 10 to 1, or (ii) its net capital is less than 120% of the minimum required net capital.

(6) Notwithstanding the provisions of subparagraphs (4) and (5) above, if the ETP [Holder, ETP Firm or Equity ASAP] Holder is operating pursuant to Paragraph (f) of SEC Rule 15c3–1 (Alternative Net Capital Requirement), its net capital is less than the greater of $200,000 or 6% of its aggregate debits.

(7) The ETP [Holder, ETP Firm or Equity ASAP] Holder has experienced a substantial change in the nature of the business conducted which, in the view of the Corporation, increases the potential risk of loss to customers[,] *and* ETP [Holders, ETP Firms and Equity ASAP] Holders.

(8) The ETP [Holders, ETP Firms or Equity ASAP] Holder's books and records are not maintained in accordance with the provisions of SEC Rules 17a–3 and 17a–4.

(9) The ETP [Holder, ETP Firm or Equity ASAP] Holder is unable to demonstrate compliance with applicable net capital requirements.

(10) The ETP [Holder, ETP Firm or Equity ASAP] Holder has substantial unsecured loans, advances or other similar receivables relative to its net capital position. For purposes of this provision, 15% is considered substantial.

(11) The ETP [Holders, ETP Firms or Equity ASAP] Holder's subordinated capital equals or exceeds 40% of its debt-equity total, as defined under paragraph (d) of SEC Rule 15c1–1.

(12) The ETP [Holder, ETP Firm or Equity ASAP] Holder is subject to undue concentration charges on proprietary positions, the aggregate market value of which equals or exceeds 15% of the total market value of all proprietary positions.

(13) The ETP [Holder, ETP Firm or Equity ASAP] Holder is unable to clear and settle transactions promptly.

(14) The ETP [Holder, ETP Firm or Equity ASAP] Holder is not in compliance, or is unable to demonstrate compliance, with SEC Rule 15c3–3 (Customer Protection-Reserves and Custody of Securities).

(15) The ETP [Holder, ETP Firm or Equity ASAP] Holder is subject to the reporting provisions of SEC Rule 17a–11.

(b) If the Corporation determines that any of the conditions listed under Paragraph (a) of this Section exist, or otherwise determines that the ETP [Holder, ETP Firm or Equity ASAP] Holder is guilty of (i) conduct inconsistent with just and equitable principles of trade, (ii) acts detrimental to the interest or welfare of the Corporation; or (iii) conduct contrary to an established practice of the Corporation, the Corporation may require that the ETP [Holder, ETP Firm or Equity ASAP] Holder take appropriate action by effecting one or more of the following or similar steps, until such time as the Corporation determines otherwise:

(1)—No change.

(2) Promptly effect delivery to customers of all fully paid securities in the ETP [Holder's, ETP Firm's or Equity ASAP] Holder's physical possession or control.

(3) Introduce all or a portion of its business to another ETP [Holder, ETP Firm or Equity ASAP] Holder on a fully disclosed basis.

(4)–(7)—No change.

(8) Undertake an immediate audit by an independent public accountant at the ETP [Holder's, ETP Firm's or Equity ASAP] Holder's expense.

(9) Restrict the payment of salaries or other sums to partners, officers, directors, shareholders or affiliated persons of the ETP [Holder, ETP Firm or Equity ASAP] Holder.

(10)–(12)—No change.

(c) The provisions contained in this Section do not limit the Corporation's authority to use other standards or to impose other restrictions, or take other action deemed appropriate under the circumstances in the public interest and for the protection of ETP Holders[, Equity ASAP Holders, and ETP Firms].

Commentary

.01.—No change.

**Section 2. Financial Reports**

Reports To Be Filed

Rule 4.5 Unless the Corporation determines otherwise, every ETP Holder, [ETP Firm and Equity ASAP Holder,] except as otherwise provided in Rule 4.7, shall file with the Corporation the reports prescribed by this Section.

Monthly Reports

Rule 4.5(a). Part I of SEC Form X–17A–5 shall be filed monthly by any ETP Holder[, ETP Firm or Equity ASAP Holder] which carries or clears accounts for customers. Such report shall be due by the tenth business day following the end of the month being reported upon.

Part II Quarterly Reports

Rule 4.5(b). Two manually signed copies of Part II of SEC Form X–17A–5 shall be filed for each calendar quarter by any ETP Holder[, ETP Firm or Equity ASAP Holder] which carries or clears accounts for customers. Such report shall be due by the fifteenth calendar day following the end of the calendar quarter being reported upon.

Part IIA Quarterly Reports

Rule 4.5(c). Two manually signed copies of Part IIA of SEC Form X–17A–5 shall be filed for each calendar quarter by any ETP Holder[, ETP Firm or Equity ASAP Holder] which does not carry or clear accounts for customers. Such report shall be due by the fifteenth calendar day following the end of the calendar quarter being reported upon.

Part II or Part IIA Filings on Other Than Calendar Quarters

Rule 4.5(d). An ETP Holder[, ETP Firm or Equity ASAP Holder] shall file an additional Part II or Part IIA of SEC Form X–17A–5, as appropriate, within fifteen calendar days after the date selected for the annual audited financial statements of the ETP Holder, [ETP Firm or Equity ASAP Holder,] pursuant to the provisions of Rule 4.10, where such date does not coincide with the end of a calendar quarter.

Periodic Reports

Rule 4.5(e). Every ETP Holders[, Equity ASAP Holders, and ETP Firm] shall submit, as required by the Corporation periodic reports with respect to short positions in securities.

Commentary

01. Short Positions. ETP Holders[, Equity ASAP Holders, and ETP Firm] for which the Corporation is the designated examining authority (''DEA'') are required to report ''short'' positions, including odd lots, in each stock or warrant listed or traded on the Corporation, and in each other stock or warrant not listed or traded on the Corporation (and not otherwise reported to another self-regulatory organization), using such automated format and methods as prescribed by the Corporation. Such reports must include customer and proprietary positions and must be made at such times and covering such time period as may be designated by the Corporation.

Every ETP Holder[, Equity ASAP Holder, and ETP Firm] for which the Corporation is not the DEA must report ''short'' positions to the self-regulatory organization that is the DEA for such ETP Holder[, Equity ASAP Holder or ETP Firm] if such DEA has a requirement for such reports. If the DEA does not have such a reporting requirement, then such ETP Holder[, Equity ASAP Holder or ETP Firm] must comply with the provisions of this Rule 4.5(e).

ETP [Holders, ETP Firms or Equity ASAP] Holders whose short positions have been properly reported to, and are carried by, a non-ETP [or non-Equity ASAP] clearing organization will be in compliance with this Rule 4.5(e) if adequate arrangements have been made for such clearing organization to report such positions to the Corporation or to another self-regulatory organization.

''Short'' positions to be reported are those resulting from ''short'' sales as defined in SEC Rule 3b–3, but excluding positions resulting from sales specified in clauses (1), (6), (7), (8), (9) and (10) of paragraph (e) of SEC Rule 10a–1. Also to be excluded are ''short'' positions carried for other ETP Holders[, Equity ASAP Holders, and ETP Firms] reporting for themselves.

Only one report should be made for each stock or warrant in which there is a short position. If more than one account has a short position in the same stock or warrant, the combined aggregate should be reported.

The term ''designated examining authority'' means the self-regulatory organization that has been assigned responsibility for examining an ETP Holder[, Equity ASAP Holder, or ETP Firm] for

compliance with applicable financial responsibility rules.

.02 ETP Holders[, Equity ASAP Holders, and ETP Firms] for which the Corporation is the DEA need not report ''short'' positions to the Corporation as provided in Commentary .01 if such ETP Holder[, Equity ASAP Holder, or ETP Firm] has made arrangements, satisfactory to the Corporation, to report such positions to another self-regulatory organization.

Accelerated Reporting

Rule 4.6. Unless the Corporation determines otherwise, if any of the conditions described in this Section is applicable, an ETP Holder[, Equity ASAP Holder or ETP Firm] subject to the provisions of Rule 4.5 shall file with the Corporation on a monthly basis (or more frequently if the Corporation so determines) Part II or Part IIA of SEC Form X–17A–5, as appropriate, together with a schedule of proprietary securities and commodities, and related ''haircuts'', and any other supplementary schedules deemed appropriate by the Corporation. Such reports shall be due by the fifteenth calendar day following the end of the month during which this Section becomes applicable to [a] *an* ETP Holder[, Equity ASAP Holder, or ETP Firm,] and such accelerated reports shall continue to be filed each month thereafter (or more frequently is the Corporation so determines) until the ETP Holder[, Equity ASAP Holder, or ETP Firm] is otherwise advised by the Corporation[:].

SIPC Referral

Rule 4.6(a). An ETP Holder[, Equity ASAP Holder or ETP Firm] subject to the referral provisions of Section 59a) of the Securities Investor Protection Act will be notified by the Corporation to file accelerated reports.

Financial or Operational Condition

Rule 4.6(b). An ETP Holder[, Equity ASAP Holder, or ETP Firm] that has exceeded or is exceeding the financial or operational parameters set forth in Rule 4.4 shall file without further notice the reports required by this Section.

General Conditions

Rule 4.6(c). The Corporation requires the filing of accelerated reports for reasons relating to (i) the financial or operational condition of the ETP Holder[, Equity ASAP Holder, or ETP Firm] (notwithstanding the provisions of paragraph (b) of this Section), (ii) the condition of the securities markets, or (iii) the condition of the securities industry, in which events the Corporation will notify the ETP Holder[, Equity ASAP Holder, or ETP Firm] to file accelerated reports.

Exemptions

Rule 4.7(a). An ETP Holder[, Equity ASAP Holder, or ETP Firm] shall be exempt from the filing requirements prescribed by Rules 4.5 and 4.6 under the following conditions:

[(1)] Any ETP Holder[, Equity ASAP Holder or ETP Firm] which is a member of another self-regulatory organization which has been designated the examining authority for such ETP Holder[, Equity ASAP Holder or ETP Firm] by the Securities and Exchange Commission.

(b) An ETP Holder[, Equity ASAP Holder or ETP Firm] qualifying for an exemption pursuant to this Paragraph shall file with the Corporation a copy of Notice and Part II of SEC Form X–17A–5, including such supplementary schedules as may be required, pursuant to the provisions of Rule 17a–11 under the Securities Exchange Act of 1934, as amended, at such time and at such frequency as prescribed by such other designated examining authority or by any applicable rule.

Report Filed Upon Termination of Membership Interest

Rule 4.8. If an ETP Holder[, Equity ASAP Holder or ETP Firm] holding any membership interest in a national securities exchange ceases to be a member in good standing of such exchange, such ETP Holder[, Equity ASAP Holder or ETP Firm] shall, within two business days after such event, file with the Securities and Exchange Commission and with the Corporation, Part II of Form X–17A–5, as of the date of such event, pursuant to the provisions of Paragraph (b) of Rule 17a–5 under the Securities Exchange Act of 1934, as amended.

Customer Statements

Rule 4.9. Every ETP Holder[, Equity ASAP Holder or ETP Firm] shall furnish to its customers, principal stockholders and subordinated lenders, and shall file with the Securities and Exchange Commission, the Corporation, and any other self-regulatory organizations of which it is a member, certain financial statements in accordance with the provisions of Paragraph (c) of Rule 17a–5 under the Securities Exchange Act of 1934, as amended.

Annual Filing of Audited Financial Statements

Rule 4.10. Every ETP Holder[, Equity ASAP Holder or ETP Firm] shall file annually a report which shall be audited by an independent public accountant in accordance with the provisions of paragraphs (d) through (n) of Rule 17a–5 under the Securities Exchange Act of 1934, as amended.

Financial Reports

Rule 4.11(a). Every ETP Holder[, Equity ASAP Holder or ETP Firm] which is not a member of another national securities exchange or registered national securities association which is the Designated Examining Authority for that ETP Holder[, Equity ASAP Holder or ETP Firm] shall file with the Corporation answers to Financial Questionnaires, Reports of Income and Expenses and additional financial information in the type, form, manner and time prescribed by the Corporation.

Rule 4.11(b).

(1) Each ETP Holder[, Equity ASAP Holder, or ETP Firm] shall file with the Corporation a Report of Financial Condition on SEC Form X–17A–5 as required by Securities and Exchange Commission Rules 17a–5 and 17a–10. Any ETP Holder[, Equity ASAP Holder or ETP Firm] who fails to file such Report of Financial Condition in a timely manner shall be subject to late filing charges as follows:

| Number of Days Late | Amount of Charge |
|---|---|
| 1–30 | $20.00 |
| 31–60 | 400.00 |
| 61–90 | 800.00 |

Repeated or aggravated failure to file such Report of Financial Condition or failure to file such report for more than ninety (90) days will be referred to the Business Conduct Committee for appropriate disciplinary action.

(2) Each ETP Holder[, Equity ASAP Holder or ETP Firm] for which the Corporation is the designated collection agent must file with the Corporation such forms and assessments as are required pursuant to the Securities Investor Protection Act of 1970. Any ETP Holder[, Equity ASAP Holder or ETP Firm] that fails to file such form or assessment in a timely manner will be subject to a late filing charge as follows:

| Number of days late | Amount of charge |
|---|---|
| 1–30 | $100.00 |
| 31–60 | 200.00 |
| 61–90 | 300.00 |

Provided however:

(A) if an ETP Holder[, Equity ASAP Holder or ETP Firm] files its SIPC form and assessment after its receipt of SIPC's final late notice, but files within five business days after its receipt of SIPC's final late notice, such ETP Holder[, Equity ASAP Holder or ETP Firm] will be subject to a fine pursuant to Rule 10.12(i)(2); and

(B) if an ETP [Firm] *Holder* fails to file its SIPC form and assessment within five business days after its receipt of SIPC's final late notice, such ETP [Firm] *Holder* will be subject to formal disciplinary action pursuant to Rule 10.4.

Commentary

.01 An ETP Holder[, Equity ASAP Holder or ETP Firm] that files its SIPC form and assessment more than 90 days late but before its receipt of SIPC's final late notice will be subject to a late charge of $800.

.02—No change.

Financial Responsibility and Operational Condition

Rule 4.11(c). The Corporation shall have the authority to examine the financial responsibility and/or operational conditions of any ETP Holder[, Equity ASAP Holder, or ETP Firm]. In conducting such examinations, the Corporation may require an ETP Holder[, Equity ASAP Holder, or ETP Firm] to furnish requested information. If the Corporation deems it necessary, ETP Holders[, Equity ASAP Holders or ETP Firms] shall make available their books and records as well as provide sworn or unsworn testimony. All examinations shall be conducted in a manner consistent with the rules and regulations governing the duty of the Corporation.

Underwriting Commitments

Rule 4.12. Each ETP Holder[, Equity ASAP Holder or ETP Firm,] for which the Corporation is the designated examining

authority, which enters into a security underwriting commitment, either with respect to an original or a secondary distribution of securities, whether or not admitted to dealing on the Corporation, shall notify the Corporation thereof in such manner as the Corporation shall prescribe.

Lawsuits

Rule 4.13. Each ETP Holder[, Equity ASAP Holder or ETP Firm] for which the Corporation is the designated examining authority, shall give written notice to the Corporation regarding all lawsuits involving such ETP Holder[, Equity ASAP Holder or ETP Firm] or any participant therein, including a description of the nature and principal allegations of such lawsuits, and a statement of the amount of damages claimed therein. Similar notice shall be given to the Corporation regarding any claims or contingent liabilities that appear likely to result in litigation.

**Section 3. Margins**

Daily Margin Record

Rule 4.14(a). Each ETP Holder[, Equity ASAP Holder, or ETP Firm] registered on the Corporation, carrying margin accounts for customers shall make and maintain a record of every case in which initial or additional margin must be obtained in a customer's account because of transactions effected in such account. This record shall show for each account the date of the transaction, the customer's name, the amount of margin required and the time when and manner in which such margin is furnished or obtained. This record shall be in a form acceptable to the Corporation and contain such additional information as the Corporation may from time to time prescribe. This record shall be preserved for at least twelve months.

Margin by Liquidation

Rule 4.14(b). No ETP Holder[, Equity ASAP Holder, or ETP Firm] registered on the Corporation shall permit a customer to make a practice of effecting transactions requiring initial or additional margin pursuant to rules of the Corporation or regulations of the Board of Governors of the Federal Reserve System and then furnishing such margin by the liquidation of the same or other commitments; except that the provisions of this section shall not apply to any account maintained for another broker or dealer in which are carried only the commitments of the customers of such other broker or dealer exclusive of his partners, provided such other broker or dealer (i) is an ETP Holder[, or Equity ASAP Holder] of the Corporation[, or an ETP Firm registered thereon]; or (ii) has agreed in good faith with the ETP Holder[, Equity ASAP Holder, or ETP Firm] carrying the account that [he] *it* will maintain a record equivalent to that referred to in Rule 4.14(a); or (iii) is not subject to the regulations of the Board of Governors of the Federal Reserve System.

Members Other Exchanges

Rule 4.14(c). An ETP Holder[, Equity ASAP Holder, or ETP Firm] registered as a member on another national securities exchange or association which has comparable standards and which has been designated by the Securities and Exchange Commission as the primary regulator is exempt from the provisions of this [rule] *Rule,* unless otherwise stated.

Customer Defined

Rule 4.14(d). For the purpose of this [rule] *Rule,* the term customer shall include any person or entity for whom securities are purchased or sold or to whom securities are sold or from whom securities are purchased whether on a regular way, when issued, delayed or future delivery basis. It will also include any person or entity for whom securities are held or carried. The term will not include a broker or dealer from whom a security has been purchased or to whom a security has been sold for the account of the ETP Holder[, Equity ASAP Holder or ETP Firm] or its customers.

Initial Margin

Rule 4.14(e)—No change.

Margin Requirements

Rule 4.15(a). For the purpose of effecting new securities transactions and commitments, the margin required shall be an amount equivalent to the requirements of paragraph (b) of this section, or such greater amount as the Corporation may from time to time require for specific securities, with a minimum equity in the account of at least $2,000, except that cash need not be deposited in excess of the cost of any security purchased. The foregoing minimum equity and cost of purchase provisions shall not apply to ''when distributed'' securities in cash accounts and the exercise of rights to subscribe.

Withdrawals of cash or securities may be made from any account, provided that after such withdrawal the equity in the account is at least the greater of $2,000 or the amount required by the maintenance requirement of this [rule] *Rule*.

Maintenance Margin Rule

Rule 4.15(b). The margin which must be maintained in margin accounts of customers, whether ETP Holder, [Equity ASAP Holders, ETP Firms,] Allied Persons thereof or non-ETP [or non-Equity ASAP Firms] *Holders,* shall be as follows:

(1)–(5)—No change.

Exceptions to Rule

Rule 4.15(c). The foregoing requirements of this Rule are subject to the following exceptions:

(1)—No change.

(2) Exempted Securities.

(A)–(B)—No change.

(C) Cash Transactions With Customers—Special Provisions—When a customer purchases an issued ''exempted'' security from or through an ETP Holder, [Equity ASAP Holder, or ETP Firm,] in a cash account, full payment shall be made promptly. If, however, delivery or payment therefore is not made promptly after the trade date, a deposit shall be required as if it were a margin transaction, unless it is a transaction with a bank, trust company, insurance company, investment trust or charitable or nonprofit educational institution.

In connection with any net position resulting from any transaction in issued ''exempted'' securities made for an ETP Holder[, Equity ASAP Holder or ETP Firm,] or a non-ETP [or non-Equity ASAP] broker-dealer, or made for or with a bank, trust company, insurance company, investment trust or charitable or non-profit educational institution, no margin need be required and such net position need not be marked to market. However, where such net position is not marked to the market, an amount equal to the loss at the market in such position shall be considered as cash required to provide margin in the computation of the net capital of the ETP Holder[, Equity ASAP Holder or ETP Firm] under the Corporation's capital requirements.

(3) Joint Accounts in Which the Carrying Firm or a Partner or Stockholder Therein Has an Interest—in the case of a joint account carried by a firm, in which such firm, or any partner, ETP [Holder, Equity ASAP] Holder, Allied Person or stockholder (other than a holder of freely transferable stock only) of such ETP [Firm] *Holder* participate with others, the interest of each participant other than the carrying ETP [Firm] *Holder* shall be margined by each such participant pursuant to the provisions of this [rule] *Rule* as if such interest were in a separate account.

(4)—No change.

(5) [Specialists' and] Market Maker['s] Accounts

(A) The account of an ETP Holder[, Equity ASAP Holder or ETP Firm] in which are effected only transactions in securities in which he is [registered and acts as a specialist] *a Market Maker* may be carried upon a margin basis which is satisfactory to the [specialist] *Market Maker* and the ETP Holder[, Equity ASAP Holder or ETP Firm]. The amount of any deficiency between the margin deposited by the [specialist] *Market Maker* and the haircut requirements of SEC Rule 15c3–1 shall be considered as a debit item in the computation of the net capital of ETP [Holder, Equity ASAP Holder or ETP Firm] *Holders* under the Corporation's capital requirements.

(A) In the case of joint accounts carried by an ETP Holder[, Equity ASAP Holder or ETP Firm for specialists] for *Market Makers,* in which the ETP Holder[, Equity ASAP Holder or ETP Firm] participates, the margin deposited by the other participants may be in any amount which is mutually satisfactory. The amount of any deficiency between the amount deposited by the other participant, or participants, based upon their proportionate share of the haircut requirements of SEC Rule 15c3–1, shall be considered as a debit item in the computation of the net capital of ETP [Holder, Equity ASAP Holder or ETP Firm] *Holders* under the Corporation's capital requirements.

(6) Broker/Dealer Accounts

(A) An ETP Holder[, Equity ASAP Holder or ETP Firm] may carry the proprietary account of another broker-dealer that is registered with the Securities and Exchange Commission, upon a margin basis that is satisfactory to both parties, provided the requirements of Regulation T of the Board of Governors of the Federal Reserve System are adhered to and the account is not carried in a deficit equity condition. The amount of any deficiency between the equity maintained in

the account and the haircut requirements of SEC Rule 15c3–1 shall be deducted in computing the Net Capital of the ETP Holder[, Equity ASAP Holder or ETP Firm] under the Corporation's Capital Requirements.

(B) Joint Back Offices Arrangements. An arrangement may be established between two or more registered broker-dealers pursuant to Regulation T, Section 220.11 to form a joint back office (''JBO'') arrangement for carrying and clearing, or carrying accounts of participating broker-dealers. ETP Holders[, Equity ASAP Holders or ETP Firms] must provide written notification to the Corporation prior to establishing a JBO.

(i) A carrying and clearing, or clearing ETP Holder[, Equity ASAP Holder or ETP Firm] must:

(a) maintain a minimum Tentative Net Capital of $25 million as computed pursuant to SEC Rule 15c3–1, except that an ETP Holder[, Equity ASAP Holder or ETP Firm] whose primary business consists of the clearance of options market-maker accounts, may carry JBO accounts provided that it does not allow its Net Capital, as computed pursuant to SEC Rule 15c3–1, to fall below $7 million for a period in excess of three consecutive business days. In addition, the ETP Holder[, Equity ASAP Holder or ETP Firm] must include in its ratio of gross options market maker deductions to Net Capital required by the provisions of SEC Rule 15c3–1, gross deductions for JBO participant accounts. Clearance of options market maker accounts shall be deemed to be a broker-dealer's primary business if a minimum of 60% of the aggregate deductions in the above ration are options market maker deductions;

(b) maintain a written risk analysis methodology for assessing the amount of credit extended to participating broker-dealers which shall be made available to the Corporation upon request; and

(c) deduct from Net Capital haircut requirements pursuant to SEC Rule 15c3–1 in excess of the equity maintained in the amounts of participating broker-dealers.

(ii) A participating broker-dealer must:

(a) be a registered broker-dealer subject to the SEC's Net Capital Rule;

(b) maintain an ownership interest in the carrying/clearing ETP Holder[, Equity ASAP Holder or ETP Firm] pursuant to Regulation T, Section 220.11; and

(c) maintain a minimum liquidating equity of $1 million in the Joint Back Office arrangement exclusive of the ownership interest established in (b) above. When the minimum liquidating equity decreases below the $1 million requirement, the participant must deposit an amount sufficient to eliminate this deficiency within 5 business days. If funds or securities sufficient to eliminate the deficiency are not received within 5 business days, the carrying organization must margin the account in accordance with the requirements prescribed for a customer in Regulation T.

(d) If at any time a clearing ETP Holder[, Equity ASAP Holder or ETP Firm] operating pursuant to subsection 6(b)(1)(a) above determines that its tentative net capital or that its net capital, respectively, has fallen below the applicable requirements, such clearing ETP Holder[, Equity ASAP Holder or ETP Firm] must immediately notify the Corporation of such deficiency by telegraphic or facsimile notice; and such clearing ETP Holder[, Equity ASAP Holder or ETP Firm] will be subject to the prohibitions against withdrawal of equity capital set forth in SEC Rule 15c3–1(e) and to the prohibitions against reduction, prepayment, and repayment of subordination agreements set forth in paragraph (b)(1) of SEC Rule 15c3–1, as if such broker or dealer's net capital were below the minimum standards specified by each of these paragraphs.

Other Provisions

Rule 4.15(d). Determination of Value for Margin Purposes.

(1) Active securities dealt in on a recognized exchange shall, for margin purposes, be valued at current market prices. Other securities shall be valued conservatively in the light of current market prices and the amount which might be realized upon liquidation. Substantial additional margin must be required in all cases where the securities carried are subject to unusually rapid or violent change sin value, or do not have an active market on a recognized exchange, or where the amount carried is such that it cannot be liquidated promptly.

To qualify for margin value, securities shall be in negotiable form and, except for bearer securities, shall be registered in street name (firm name, or firm agent, or firm nominee or in process of being transferred to such) after constructive receipt thereof. A cash margin deficiency shall be treated as a debit item in the computation of [Net Capital] *net capital.*

(2) Puts, Calls Other Options, Currency Warrants, Currency Index Warrants and Stock Index Warrants.

(A)—No change.

(B) The issuance, guarantee or sale (other than a ''long'' sale) for a customer of a put or a call shall be considered as a security transaction subject to Rule 4.15(a). The short sale for a customer of a currency warrant, currency index warrant or stock index warrant shall be considered as a security transaction subject to paragraph (a) of this Rule 4.15[(d)].

(C)—No change.

(D) The margin on any put, call, currency warrant, currency index warrant or stock index warrant issued, guaranteed or carried ''short'' in a customer's account shall be:

(i)—No change.

(ii) In the case of puts and calls listed or traded on a registered national securities exchange or a registered securities association and issued by a registered clearing corporation which [represent] *represents* options on GNMA obligations in the principal amount of $100,000, 130% of the current market value of the option plus $1,500, except that the margin required need not exceed $5,000 plus the current market value of the option.

(iii)—No change.

(E)—No change.

(F) (1)–(3)—No change.

*(4)*—No change.

(G)—No change.

(H) ''Long'' and ''Short'' Positions in Securities and Options. (1)–(4)—No change.

(5) Bank Guarantee Letters—

No margin need be required in respect of a put option contract carried in a ''short'' position where the customer has delivered to the ETP Holder[, Equity ASAP Holder or ETP Firm] with which such position is maintained a letter of guarantee issued by a bank approved to issue escrow receipts under Rule 610 of the Rules of the Options Clearing Corporation, in form satisfactory to the Corporation, which certifies that such bank holds on deposit for the account of the customer cash in the full amount of the aggregate exercise price of such put option contract, and that such amount will be paid to the ETP Holder[, Equity ASAP Holder or ETP Firm] against delivery of the underlying security covered by such put option contract.

(6) No margin is required in respect of a warrant on a market index carried in a short position where the customer has delivered, promptly after the warrant has been sold short, to the ETP Holder[, Equity ASAP Holder or ETP Firm] with which such position is maintained, a Market Index Warrant Escrow Receipt in a form satisfactory to the Corporation, issued by a bank or trust company pursuant to specific authorization from the customer certifying that the issuer of the agreement holds for the account of the customer: (1) cash, (2) cash equivalents, (3) one or more qualified equity securities, or (4) a combination thereof; that such deposit has an aggregate market value, at the time the warrant has been sold short, or not less than 100% of the aggregate currency index value; and that the issuer will promptly pay the ETP Holder[, Equity ASAP Holder or ETP Firm] the exercise settlement amount in the event the account is assigned an exercise notice.

(7)—No change.

(I) When an ETP Holder[, Equity ASAP Holder or ETP Firm] issues or guarantees an option to receive or deliver securities for a customer, such option shall be margined as if it were a put or call.

(J) Option Specialists, Market Makers and Traders. Notwithstanding the other provisions of this sub-section (d)(2), an ETP Holder[, Equity ASAP Holder or ETP Firm] may clear and carry the listed option transactions of one or more registered specialists, registered market makers or registered traders in options (which registered traders are deemed specialists for all purposes under the Securities Exchange Act of 1934 pursuant to the rules of a national securities exchange) (hereafter referred to as ''specialists(s)''), upon a ''Good Faith'' margin basis satisfactory to the concerned parties, provided the ''Good Faith'' margin requirement is not less that the Net Capital haircut deduction of the ETP Holder[, Equity ASAP Holder or ETP Firm] carrying the transaction pursuant to SEC Rule 15c3–1. In lieu of collecting the ''Good Faith'' margin requirement, a carrying ETP Holder[, Equity ASAP Holder or ETP Firm] may elect to deduct in computing its net capital the amount of any deficiency between the equity maintained in the account and the ''Good Faith'' margin required.

For purposes of the subsection (d)(2)(J), a permitted offset position means, in the case

of an option in which a specialist makes a market, a position in the underlying asset or other related assets, and in the case of other securities in which a specialist makes a market, a position in options overlying the securities in which a specialist makes a market. Accordingly, a specialist in options may establish, on a share-for-share basis, a long or short position in the securities underlying the options in which the specialist makes a market, and a specialist in securities other than options may purchase or write options overlying the securities in which the specialist makes a market, if the account holds the following permitted offset positions:

(i)–(ii)—No change.

*(iii)*—No change.

(iv)–(vi)—No change.

(vii) a specified portfolio type as referred to in SEC Rule 15c3–1, including its appendices, or any applicable SEC staff interpretation or no-action position.

Permitted offset transactions must be effected for market making purposes such as hedging, risk reduction, rebalancing of positions, liquidation, or accommodation of customer orders, or other similar market making purposes.

For purposes of this paragraph (d)(2)(J), the term ''in or at the money'' means the current market price of the underlying security is not more than two standard exercise intervals below (with respect to a call option) or above (with respect to a put option) the exercise price of the option; [the term ''in the money'' means the current market price of the underlying asset or index is not below (with respect to a call option) or above (with respect to a put option) the exercise price of the option;] and, the term ''overlying option'' means a put option purchased or a call option written against a long position in an underlying asset; or a call option purchased or a put option written against a short position in an underlying asset.

Securities, including options, in such accounts shall be valued conservatively in the light of current market prices and the amount that might be realized upon liquidation. Substantial additional margin must be required or excess net capital maintained in all cases were the securities carried: (i) are subject to unusually rapid or violent [chances] *changes* in value including volatility in the expiration months of options, (ii) do not have an active market, or (iii) in one or more or all accounts, including proprietary accounts combined, are such that they cannot be liquidated promptly or represent undue concentration of risk in view of the carrying organization's net capital and its overall exposure to material loss.

(K)—No change.

(L) Exclusive designation—A customer may designate at the time an option order is entered which security position held in the account is to serve in lieu of the required margin, if such service is offered by the ETP Holder[, Equity ASAP Holder or ETP Firm]; or the customer may have a standing agreement with the ETP Holder[, Equity ASAP Holder or ETP Firm] as to the method to be used for determining on any given day which security position will be used in lieu of the margin to support an option transaction. Any security held in the account that serves in lieu of the required margin for a short put or short call shall be unavailable to support any other option transaction in the account.

(M) Cash account transactions.—An ETP Holder[, Equity ASAP Holder or ETP Firm] may make option transactions in a customer's cash account, providing:

(i)–(ii)—No change.

(3) ''When Issued'' and ''When Distributed'' Securities—

(A)—No change.

(B) Cash Accounts

In connection with any transactions or net position resulting from contracts for a ''when issued'' security in an account other than that of an ETP Holder, [Equity ASAP Holder or ETP Firm,] non-ETP [or non-Equity ASAP] broker or dealer, bank, trust company, insurance company, investment trust, or charitable or non-profit educational institution, deposits shall be required equal to the margin required were such transaction or position in a margin account.

In connection with any net position resulting from contracts for a ''when issued'' security made for or with a non-ETP [or non-Equity ASAP] broker or dealer, no margin need be required, but such net position must be marked to the market.

In connection with any net position resulting from contracts for a ''when issued'' security made for an ETP Holder[, Equity ASAP Holder or ETP Firm] or for or with a bank, trust company, insurance company, investment trust, or charitable or non-profit educational institution, no margin need be required and such net position need not be marked to the market. However, where such net position is not marked to the market, an amount equal to the loss at the market in such position shall be considered as cash required to provide margin in the computation of the net capital of the ETP Holder[, Equity ASAP Holder or ETP Firm] under the Corporation's capital requirements.

The provisions of this subparagraph shall not apply to any position resulting from contracts on a ''when issued'' basis in a security

(i)–(ii)—No change.

(4) Guaranteed Accounts—Any account guaranteed by another account may be consolidated with such other account and the required margin may be determined on the net position of both accounts, provided the guarantee is in writing and permits the ETP Holder[, Equity ASAP Holder or ETP Firm] carrying the account, without restriction, to use the money and securities in the guaranteeing account to carry the guaranteed account or to pay any deficit therein; and provided further that such guaranteeing account is not owned directly or indirectly by (a) a partner, ETP Holder, [Equity ASAP Holder, ETP Firm,] Allied Person thereof or any stockholder (other than a holder of freely transferable stock only) in the firm carrying such account or (b) an ETP Holder, [Equity ASAP Holder, ETP Firm,] a partner, Allied Person, or any stockholder (other than a holder of freely transferable stock only) therein having a definite arrangement for participating in the commissions earned on the guaranteed account. However, the guarantee of a limited partner or of a holder of non-voting stock, if based upon his resources other than his capital contribution to or other than his interest in an ETP Holder[, Equity ASAP Holder or ETP Firm,] is not affected by the foregoing prohibition, and such a guarantee may be taken into consideration in computing margin in the guaranteed account.

(5)–(6)—No change.

(7) Practice of Meeting Margin Calls by Liquidation Prohibited—No ETP Holder[, Equity ASAP Holder, or ETP Firm] shall permit a customer to make a practice of effecting transactions requiring margin and then either deferring the furnishing of margin beyond the time when such transactions would ordinarily be settled or cleared, or meeting such demand for margin by the liquidation of the same or other commitments in his account.

(8) Free Riding in Cash Accounts Prohibited—No ETP Holder[, Equity ASAP Holder, or ETP Firm] shall permit a customer (other than a broker/dealer or bank, trust company, insurance company, investment trust, or charitable or non-profit educational institution) to make a practice, directly or indirectly, of effecting transactions in a cash account where the cost of securities purchased is met by the sale of the same securities. No ETP Holder[, Equity ASAP Holder or ETP Firm] shall permit such a customer to make a practice of selling securities which were purchased in a cash account at another broker-dealer and are not yet paid for. A customer shall not be deemed to be continuing this practice if for a period of 90 days (or less with the approval of the Corporation) no such transactions have taken place. An ETP Holder[, Equity ASAP Holder or ETP Firm] transferring an account which is under restraint to another broker-dealer shall inform the receiving broker-dealer of the restraint.

(9) BOUNDs

(A)–(F)—No change.

(G)(i)—No change.

(ii) When a BOUND and a LEAP with the same expiration and strike price are issued, guaranteed or carried ''short'' against an existing net ''long'' position in the security underlying the BOUND and LEAP, or in any security that meets the requirements of Rule [6.1(1)(23)] *6.1(a)(23)* of the PCX Parent relating to covered options or in any security immediately exchangeable or convertible, other than warrants without restriction including the payment of money, into the security underlying the BOUND and LEAP, no margin need be required on either the BOUND or the LEAP provided (1) such net ''long'' position is adequately margined in accordance with this Rule and (2) the right to exchange or convert the net ''long'' position does not expire on or before the expiration date of the ''short'' BOUND or LEAP.

(iii)–(iv)—No change.

(H) Notwithstanding the other provisions of this paragraph (d)(9), the account of a person in which are effected only transaction in which such person is registered and acts as a specialist or market maker on an exchange, and the account of a registered trader containing only transactions effected

by him in his capacity as a registered trader, may be cleared and carried on a margin basis which is satisfactory to the specialist, market maker or registered trader and the ETP Holder[, Equity ASAP Holder or ETP Firm] carrying the account.

(I)—No change.

Commentary

.01—No change.

Notice to Corporation

Rule 4.16. An ETP Holder[, Equity ASAP Holder, or ETP Firm] commencing to carry margin accounts shall immediately notify the Corporation in writing.

Location of Records

Rule 4.17. An ETP Holder[, Equity ASAP Holder, or ETP Firm] shall maintain at its main office the daily margin record required by Rule [4(a)] *4.14(a).* An ETP Holder[, Equity ASAP Holder, or ETP Firm] maintaining margin records at two or more offices shall maintain such records at each office for inspection.

Determination of Margin

Rule 4.18—No change.

Fidelity Bonds

Rule 4.19(a). Each ETP Holder[, Equity ASAP Holder or ETP Firm] which transacts business with the public or clears transactions for other ETP Holders[, Equity ASAP Holders, or ETP Firms] shall carry fidelity bonds in such form and in such amounts as the Corporation may require covering the [individual] *sole proprietor* ETP [Holder, Equity-ASAP] Holder, or, in the case of an [Equity ASAP] *ETP* Holder [or ETP Firm] *organization,* its general partners or officers and its employees.

(b) ETP Holders[, Equity ASAP Holders or ETP Firms] subject to this Rule are required to maintain basis and specific coverages in amounts not less than those prescribed in this Rule. Where applicable such coverage must also extend to limited partners as employees, and outside organizations providing electronic data processing services and the handling of U.S. Government securities in bearer form.

(c) Each ETP Holder[, Equity ASAP Holder or ETP Firm] that introduces customers' accounts on a fully disclosed basis must maintain coverage as follows:

(i) Minimum basis coverage for such ETP Holder[, Equity ASAP Holder or ETP Firm] whose net capital requirement under Rule 4:

A.–B—No change.

(ii) Specific coverage for such ETP Holders[, Equity ASAP Holders or ETP Firms] shall be as follows:

A—No change.

B. Fraudulent Trading (not required of ETP Holders, [Equity ASAP Holders,] those not associated with an ETP [Firm] *Holder* or partnerships having no employees)—the greater of $25,000 or 50% of the basis bond minimum requirement, up to $500,000.

C.—No change.

(d) Each ETP Holder[, Equity ASAP Holder on ETP Firm] which carries customers' accounts or clears transactions for other ETP Holders[, Equity-ASAP Holders, ETP Firms] must maintain coverage as follows:

(i) Minimum basis coverage for such ETP Holder[, Equity ASAP Holder or ETP Firm] shall be based on their net capital requirement under Rule 4 as follows:

| Net capital requirement under rule 4 | Basis minimum coverage |
|---|---|
| $25,000–$50,000 | $200,000 |
| $50,001–$100,000 | 300,000 |
| $100,001–$200,000 | 500,000 |
| $200,001–$300,000 | 600,000 |
| 300,001–$500,000 | 700,000 |
| $500,001–$1,000,000 | 800,000 |
| $1,000,001–$2,000,000 | 1,000,000 |
| $2,000,001–$3,000,000 | 1,500,000 |
| $3,000,001–$4,000,000 | 2,000,000 |
| $4,000,001–$6,000,000 | 3,000,000 |
| $6,000,001–$12,000,000 | 4,000,000 |
| $12,000,001 and higher | 5,000,000 |

(ii) Specific coverages for such ETP Holder[, Equity ASAP Holder or ETP Firm] shall be as follows:

A.–C. No change.

(iii) Misplacement, Fraudulent Trading, Check Forgery and Securities Forgery.

A. Each ETP Holder[, Equity ASAP Holder or ETP Firm] shall be expected to review carefully any need for coverage greater than that provided by the required minimums. Where experience or the nature of the business warrants additional coverage, the Corporation expects the ETP Holder[, Equity ASAP or ETP Firm] to acquire it.

B. ETP Holder[, Equity ASAP Holders, and ETP Firms] required to carry the above form(s) of insurance shall advise the Corporation in writing if such insurance is entirely or partially canceled.

(e)—No change.

**Rule 5**

**Listings**

**Section 1. General Provisions and Definitions**

General Provisions and Definitions

RULE 5.1(a)—No change.

RULE 5.1(b). Definitions. The following terms used in Rules 5.2 through 5.5 shall, unless otherwise indicated, have the meanings herein specified:

(1)–(3)—No change.

(4) The term ''listed''; and the phrase ''listed'' on the Corporation [means] *mean* a security that has been listed on the PCX Parent pursuant to Section 12(b) of the Securities Exchange Act of 1934. Such security shall be listed pursuant to a formal application and request for such listing filed by the issuing company.

(5)–(15)—No change.

**Section 2. Applications to List**

RULE 5.2(a)–5.2(f)—No change.

Contingent Value Rights (''CVRs'')

RULE 5.2(g)—No change.

Commentary

.01 Prior to the commencement of trading of securities admitted to listing under this Rule 5.2(g), the Corporation will distribute a circular to its membership explaining the specific risks associated with CVRs and providing guidance regarding [member firm] *ETP Holder* compliance responsibilities when handling transactions in such securities.

Unit Investment Trusts (''UITs'')

RULE 5.2(h)—No change.

Commentary

.01 Customers must be provided with a prospectus and an explanation of any special characteristics and risks attendant to trading MIT interests. Before [a] *an* ETP Holder, [ETP Firm, or Equity ASAP Holder,] or an officer, partner, or employee of such [a] *an* ETP [Firm, or Equity ASAP] Holder, undertakes to recommend a transaction in the UIT interest or in the component securities, such officer, partner or employee should make a determination that such UIT interests, components or units are not unsuitable for such customer, and the person making the recommendation should have a reasonable basis for believing at the time of making the recommendation, that the customer has such knowledge and experience in financial matters that he may reasonably be expected to be capable of evaluating the risks and the special characteristics of the recommended transaction and is financially able to bear the risks of the recommended transaction and constituent interest.

.02 An ETP Holder[, Equity ASAP Holder or ETP Firm] must provide a prospectus to an investor in connection with each transaction in a UIT interest, unless such ETP [Holder, ETP Firm, or Equity ASAP] Holder has in place a procedure by which to verify previous receipt of a current prospectus. The investor must receive such prospectus prior to or concurrently with the transaction confirmation.

.03—No change.

RULE 5.2(i)—No change.

Other Securities

RULE 5.2(j)(1)—No change.

Commentary

.01 Prior to commencement of trading of securities admitted to listing pursuant to this Rule 5.2(j)(1), the Corporation will evaluate the nature and complexity of the issue and, if appropriate, distribute a circular to the ETP Holders[, ETP Firms and Equity ASAP] Holders providing guidance regarding the [Firm or] Holder's compliance responsibilities when handling transactions in such securities.

Equity Linked Notes (''ELNs'')

RULE 5.2(j)(2). In the case of ELNs, the following listing requirements must be met:

(A) Issuer Listing Standards

(i) The issuer of ELNs must be an entity that:

(*a*) is listed on a national securities exchange or the Nasdaq National Market or is an affiliate of a company listed on a national securities exchange or the Nasdaq National Market; and

(b)— has a minimum net worth of $150 million.

(ii)—No change.

(B)–(D)—No change.

(E) Prior to the commencement of trading of particular ELNs listing pursuant to this Rule, the Corporation will distribute a circular to ETP [Firms and Equity ASAP] Holders providing guidance regarding

compliance responsibilities (including suitability recommendations and account approval) when handling transactions in ELNs.

RULE 5.2(j)(3)—No change.

RULE 5.2(k)–(n)—No change.

**Section 3. Corporate Governance and Disclosure Policies**

RULE 5.3(a)–(i)—No change.

Financial Reports and Related Notices

RULE 5.3(i)(1). Companies applying for listing enter into agreements with the Corporation and become subject to its [Rules] *rules*, regulations and policies applicable to listed companies. Pursuant to the listing agreement with the Corporation and the Rules of the Securities and Exchange Commission under the Securities Exchange Act of 1934, each listed company is required to submit the following information:

(i)–(ii)—No change.

Commentary

.01–.04—No change.

RULE 5.3(i)(2)—No change.

Procedure for Public Dissemination

RULE 5.3(i)(3). A listed company is expected to make timely and adequate disclosure to its shareholders, the financial community, and investing public of any news or information that might reasonably be expected to materially affect the market for its securities. Furthermore, a company should also act promptly to dispel any unfounded rumors that result in unusual market activity or price variations.

The following information will provide guidance to a listed company in making appropriate public disclosure and, therefore, ensure the maintenance of a fair and orderly marketplace to all participants:

(1)–(ii)—No change.

(iii) Relationships between Company Officials and Others

(A)—No change.

(B) [Specialists:] *Market Makers*

[The Specialist is] *Market Makers are* obligated to contribute, insofar as reasonably practical, to the maintenance of a fair and orderly market pursuant to the Rules and procedures of the Corporation. In fulfilling this responsibility, it is desirable for the [Specialist] *Market Makers* to have appropriate liaison with one or more corporate officials. Such liaison, properly conducted, provides opportunity for communication in the event of particular questions or problems encountered by either the [Specialist] *Market Makers* or the company. Company officials should be informed of any unusual market problems if deemed appropriate and would be free to call the Securities Qualification Department or Surveillance Department [(not the Specialist)] for information if a question arises about the market in the security.

There is a point beyond which it is improper for the company to go in providing information to [the Specialist] *Market Makers*. Therefore, for the company to give advance earnings, dividend, stock split, or merger information to a [Specialist] *Market Maker* or anyone else would be inappropriate. Alternatively, it is entirely appropriate for company officials to discuss matters such as the trend of business with [the Specialist] *a Market Maker*, much as they would with shareholders, security analysts, or anyone having a legitimate interest in the company. In this way, [the Specialist] *a Market Maker* may be better able to maintain a market beneficial to the company and its present and prospective shareholders.

Content and Preparation of Public Announcements

RULE 5.3(i)(4)—No change.

**Section 4. Suspension or Issuer Withdrawal from Listing**

Suspension

RULE 5.4(a)–(b)—No change.

**Section 5. Maintenance Requirements and Delisting Procedures**

RULE 5.5(a)—No change.

Tier I Securities

Maintenance Requirements

Common Stock—Select Market Companies

RULE 5.5(b). In the case of common stock, the following maintenance requirements must be met:

(1)–(4)—No change.

Commentary

.01—No change.

.02 With regard to the share bid price requirements, as set forth *in* Rule 5.5(b), the Corporation may waive such requirements upon consideration of market conditions, the issuer's capitalization, the number of outstanding and publicly held shares, and any other factors the Corporation deems appropriate.

RULE 5.5(c)–(1)—No change.

Delisting Procedures

RULE 5.5(m). Whenever the Corporation determines that it is appropriate to either suspend dealings in and/or remove securities from listing pursuant to this Rule 5.5, except for other than routine reasons (e.g., redemptions, maturities, etc.), it will follow, insofar as practicable, the following procedures:

(1)–(2)—No change.

(3) Concurrent with the Corporation's decision to delist the issuer's security, the Corporation will prepare a press announcement, which will be disseminated to the [specialist] *Market Makers* and the investing public no later than the opening of trading the business day following the Corporation's decision (the Securities Qualification Department will also distribute [a floor bulletin] *the information* to the ETP [Holders, ETP Firms and Equity ASAP] Holders). Accordingly, the suspension of trading in the issuer's security will become effective at the opening of business on the day following the Corporation's decision.

4–(6)—No change.

(7) Any documents or other written material the issuer wishes to consider should be submitted to the appropriate office of the Corporation at least five (*5*) business days prior to the date of the hearing.

(8)–(9)—No change.

**Rule 6**

**Business Conduct**

Adherence to Law

Rule 6.1. The acceptance of any account, whether on a disclosed or undisclosed basis, by an ETP Holder[, Equity ASAP Holder or ETP Firm] shall at all times comply with fair and equitable principles of trade, the applicable regulations of the Securities and Exchange Commission and of the Federal Reserve Board, *and* the Bylaws and Rules of the Corporation.

Prohibited Acts

Rule 6.2. Any ETP Holder[, Equity ASAP Holder, ETP Firm] or any [other] associated person *thereof* found guilty in accordance with the Rules and procedures of the Corporation of any of the following prohibited acts shall be subject to the imposition of penalties in accordance with the Rules of the Corporation.

(a)—No change.

(b) Conduct or proceeding inconsistent with just and equitable principles of trade, it being declared among other things, that the willful violation of any provision of the federal securities laws, the regulations of the Securities and Exchange Commission and of the Federal Reserve Board, *and* the Bylaws and Rules and procedures of the Corporation shall be considered conduct or proceedings inconsistent with just and equitable principles of trade.

(c)—No change.

(d) Willful failure to carry out any contract with another ETP Holder[, Equity ASAP Holder, or ETP Firm] of the Corporation.

(e) Willful action deemed to be detrimental to the welfare of investors, creditors, ETP [Holders, ETP Firms, Equity ASAP] Holders or the Corporation.

(f) Subjecting the Corporation or any Director or officer thereof to litigation seeking to restrain the lawful exercise of powers and duties under the Bylaws [and], Rules and procedures of the Corporation.

Prevention of the Misuse of Material, Nonpublic Information

Rule 6.3. Every ETP Holder], Equity ASAP Holder or ETP Firm] must establish, maintain and enforce written policies and procedures reasonably designed, taking into consideration the nature of such ETP Holder's[, Equity ASAP Holder's or ETP Firm's] business, to prevent the misuse of material, non-public information by such ETP Holder[, Equity ASAP Holder or ETP Firm] or persons associated with such ETP Holder[, Equity ASAP Holder or ETP Firm]. ETP Holders for whom the Corporation is the Designated Examining Authority (''DEA'') that are required, pursuant to Rule [6.7] 4.5, to file SEC form X–17A–5 with the Corporation on an annual or more frequent basis must file contemporaneously with the submission for the calendar year end ITSFEA compliance acknowledgments stating that the procedures mandated by this Rule have been established, enforced and maintained. Any ETP Holder[, Equity ASAP Holder or ETP Firm] or associated person who becomes aware of a possible misuse of material, non-public information must promptly notify the Corporation's Surveillance Department.

*Commentary:*

.01—No change.

.02 The terms ''associated person'' and ''person associated with an ETP Holder[, Equity ASAP Holder or ETP Firm]'' mean anyone who directly is engaged in the ETP Holder's[, Equity ASAP Holder's or ETP Firm's] trading-related activities, including general partners, officers, directors, managers (or any person occupying a similar status or performing similar functions), any person directly or indirectly controlling, controlled by, or under common control with an ETP Holder[, Equity ASAP Holder or ETP Firm] or any employee of the ETP Holder[, Equity ASAP Holder or ETP Firm].

For the purposes of this Rule, the term ''employee'' includes every person who is compensated directly or indirectly by the ETP Holder[, Equity ASAP Holder or ETP Firm] for the solicitation or handling of business in securities, including individuals trading securities for the account of the ETP Holder[, Equity ASAP Holder or ETP Firm], whether such securities are dealt in on an exchange or are dealt over-the-counter.

.03 Rule 6.3 provides that, at a minimum, each ETP Holder, [Equity ASAP Holder or ETP Firm] establish, maintain, and enforce the following policies and procedures:

A. All associated persons must be advised in writing of the prohibition against the misuse of material, non-public information; and

B. All associated persons of the ETP Holder[, Equity ASAP Holder or ETP Firm] must sign attestations affirming their awareness of, and agreement to abide by the aforementioned prohibitions. These signed attestations must be maintained for at least three years, the first two years in an easily accessible place; and

C. Each ETP Holder[, Equity ASAP Holder or ETP Firm] must receive and retain copies of trade confirmations and monthly account statements for each account in which an associated person: has a direct or indirect financial interest or makes investment decisions. The activity in such brokerage accounts should be reviewed at least quarterly by the ETP Holder[, Equity ASAP Holder or ETP Firm] for the purpose of detecting the possible misuse of material, non-public information; and

D. All associated persons must disclose to the ETP Holder[, Equity ASAP Holder or ETP Firm] whether they, or any person in whose account they have a direct or indirect financial interest, or make investment decisions, are an officer, director or 10% shareholder in a company whose shares are publicly traded. Any transaction in the stock (or option thereon) of such company shall be reviewed to determine whether the transaction may have involved a misuse of material non-public information.

Maintenance of the foregoing policies and procedures will not, in all cases, satisfy the requirements and intent of Rule 6.3; the adequacy of each ETP Holder's[, Equity ASAP Holder's or ETP Firm's] policies and procedures will depend upon the nature of such ETP Holder's[, Equity ASAP Holder's or ETP Firm's] business.

Rumors

Rule 6.4. No ETP Holder[, Equity ASAP Holder or ETP Firm] or any participant therein shall circulate, in any manner, rumors of a character which might affect market conditions on the Corporation; provided, however, that this rule shall not prohibit discussion of unsubstantiated information when its source and unsubstantiated nature are disclosed.

Manipulation

Rule 6.5. No ETP Holder[, Equity ASAP Holder or ETP Firm] or any participant therein shall effect or induce the purchase or sale or otherwise effect transactions in any security for the purpose of creating or inducing a false, misleading or artificial appearance of activity in such security, or for the purpose of unduly or improperly influencing the market price of such security, or for the purpose of making a price which does not reflect the true state of the market in such security.

Front-Running of Block Transactions

6.6. An ETP Holder[, Equity ASAP Holder or ETP Firm] or associated person obtaining information of an immediate pending transaction or a transaction executed but not yet reported on any national securities exchange or association involving 5,000 shares or more of a security including an equivalent number of option contracts admitted to dealings on the Pacific Exchange, *Inc.*, or securities, underlying *the* options so admitted, shall not initiate or transmit an order in the security involved, or options relating to that security, [on] through the facilities of the Corporation for any account in which he or *she or* his *or her* organization are participants until after the transaction appears on the ticker or is otherwise disclosed, in the case of orders pertaining to equities, or until two minutes after such disclosure, in the case of orders pertaining to options. Exceptions will require prior approval from the Corporation.

[Limitations on Trading Because of Customers' Orders]

[Rule 6.7—Deleted.]

[Discretionary Transactions]

[Rule 6.8—Deleted.]

Excessive Trading

Rule [6.9] *6.8.* No ETP Holder[, Equity ASAP Holder, ETP Firm,] nor any participant therein shall effect [on] through the facilities of the Corporation purchases or sales for any account in which such ETP Holder[, Equity ASAP Holder, ETP Firm] or participant therein is directly or indirectly interested, which purchases or sales are excessive in view of the financial resources of such ETP Holder[, Equity ASAP Holder, ETP Firm] or participant therein or in view of the market for such security.

Commentary

.01 An ETP Holder[, Equity ASAP Holder or ETP Firm] who issues a commitment to trade from the Corporation through ITS or any other Application of the System shall, as a consequence thereof, be deemed to be initiating a purchase or a sale of a security [on] through the facilities of the Corporation as referred to in this Rule.

Taking or Supplying Securities to Fill Customer's Order

Rule [6.10] *6.9*(a). No ETP Holder[, Equity ASAP Holder or ETP Firm] who has accepted for execution, personally or through the ETP [Firm or Equity ASAP] Holder or any participant therein, an order for the purchase of securities shall fill such order by selling such securities for any account in which the ETP Holder[, Equity ASAP Holder, ETP Firm] or any participant therein has a direct or indirect interest, or having so accepted an order for the sale of securities, shall fill such order by buying such securities for such an account, except as follows:

(1) An ETP Holder[, Equity ASAP Holder or ETP Firm] who neglects to execute an order may be compelled to take for or supply from such ETP [Holder, Equity ASAP Holder or ETP Firm's] *Holder's* account [or] the securities named in the order;

(2) An ETP Holder[, Equity ASAP Holder or ETP Firm,] acting for another ETP Holder, [Equity ASAP Holder or ETP Firm,] may take or supply the securities named in the order provided the price is justified by the condition of the market and provided that the ETP Holder[, Equity ASAP Holder or ETP Firm] who gave the order shall directly, or through a broker authorized to act for him *or her*, after prompt notification, accept the trade;

(3) An ETP Holder, [Equity ASAP Holder or ETP Firm,] acting as a broker, is permitted to report to his *or her* principals a transaction as made with himself *or herself* when he *or she* has offsetting orders from two principals to buy and to sell and not to give up;

(4) A [specialist] *Market Maker* in accordance with his *or her* duty to provide an orderly market in the securities in which he *or she* is registered may purchase or sell for principal account, such securities named in his *or her* firm's customer's order and record the transaction [on] through the facilities of the Corporation provided that:

(i) the price is consistent with the market;

(ii) full disclosure to his *or her* customer is made on the confirmation of the transaction in a manner that defines the interest of the ETP Holder[, Equity ASAP Holder or ETP Firm].

(5) An ETP Holder[, Equity ASAP Holder or ETP Firm] may purchase or sell for principal account the securities named in his customer's order, and record the transaction [on] through the facilities of the Corporation provided that:

(i) the price is consistent with the market;

(ii) full disclosure of the interest of the ETP Holder[, Equity ASAP Holder or ETP Firm] is made to his customer on the confirmation of the transaction[,].

ETP Holders Holding Options

Rule [6.11] *6.10*(a). No ETP Holder [or ETP Firm while on the Floor] shall initiate the purchase or sale [on] through the facilities of the Corporation for his *or her* own account or for any account in which the ETP Holder [or ETP Firm] or any participant therein is directly or indirectly interested, of any security admitted to dealings [on] through the facilities of the Corporation in which he *or she* holds or has granted any put, call, straddle or option, or in which he *or she* has

knowledge that the ETP [Firm] *Holder* or any participant therein holds or has granted any put, call, straddle or option, unless such put, call, straddle, or option is issued by the Options Clearing Corporation and is immediately reported to the Corporation in accordance with such procedures as may be prescribed by the Corporation.

Commentary

.01 An ETP Holder [or ETP Firm] who issues a commitment to trade from the facilities of the Corporation through ITS or any other Application of the System shall, as a consequence thereof, be deemed to be initiating a purchase or a sale or a security [on] through the facilities of the Corporation as referred to in this Rule.

(b) Each ETP Holder [or ETP Firm] shall report to the Corporation such information as may be required with respect to any substantial option relating to securities admitted to dealings [on] through the facilities of the Corporation in which such ETP Holder [or ETP Firm] or any participant therein is directly or indirectly interested or of which such ETP Holder [or ETP Firm] or any participant therein has knowledge by reason of transactions executed by or through such ETP Holder [or ETP Firm]. The Corporation may disapprove of the connection of any ETP Holder [or ETP Firm] or any participant therein with any such option which it shall determine to be contrary to the best interest or welfare of the Corporation or to be likely to create prices which will not fairly reflect market values.

Disclosure of Financial Arrangements

Rule [6.12] *6.11*(a). An ETP Holder[, Equity ASAP Holder, or ETP Firm] who enters into a financial arrangement with any other person or entity shall disclose to the Corporation the identity of such person or entity and the terms of the arrangement. For the purposes of this rule, a financial arrangement is defined as:

(1) the direct financing of an ETP Holder's[, ETP Firm's or Equity ASAP Holder's] dealings upon the Corporation; or

(2)–(3)—No change.

(b) ETP Holders[, Equity ASAP Holders and ETP Firms] with financial arrangements must submit to the Corporation notification of the initiation, modification or termination of such financial arrangements in a form, time and manner approved by the Corporation within ten (10) business days of the effective date of such arrangements or within such shorter period of time as the Corporation may require. Failure to disclose the terms of such financial arrangements to the Corporation may result in disciplinary action.

Joint Accounts

Rule [6.13] *6.12*(a). No ETP Holder [or ETP firm while on the Floor,] shall, without the prior approval of the Corporation, initiate the purchase or sale [on] through the facilities of the Corporation of any security admitted to dealings [on] through the facilities of the Corporation for any account in which the ETP Holder[, ETP Firm] or any participant therein is directly or indirectly interested with any person other than such ETP [Firm] *Holder* or participant therein.

The provisions of this rule shall not apply to any purchase or sale (1) by any ETP Holder [or ETP Firm] for any joint account maintained solely for effecting bona fide domestic or foreign arbitrage transactions or (2) by a [specialist] *Market Maker* for any joint account in which he *or she* is expressly permitted to have an interest or participation by this Rule.

Commentary

.01 An ETP Holder [or ETP Firm] who issues a commitment to trade [on] through the facilities of the Corporation through ITS or any other Application of the System shall, as a consequence thereof, be deemed to be initiating a purchase or a sale of a security [on] through the facilities of the Corporation as referred to in this Rule.

(b) Reporting. No ETP Holder[, Equity ASAP Holder or ETP Firm,] nor any participant therein shall directly or indirectly hold any interest or participation in any substantial joint account for buying or selling any security [on] through the facilities of the Corporation, unless such joint account is reported to and not disapproved by the Corporation. Such reports, in form prescribed by the Corporation, shall be filed with the Corporation before any transaction is completed [on] through the facilities of the Corporation for such joint account.

The Corporation shall require weekly reports, in *a* form prescribed by the Corporation, to be filed with it with respect to every substantial joint account for buying or selling any specific security on the Corporation and with respect to every joint account which actively trades in any security on the Corporation in which any ETP Holder[, Equity ASAP Holder, or ETP Firm] or participant therein holds any interest or participation or of which such ETP Holder[, Equity ASAP Holder or ETP Firm] or participant therein has knowledge by reason of transactions executed by or through such ETP Holder[, Equity ASAP Holder, ETP Firm] or participant therein; provided, however, that this paragraph shall not apply to joint accounts specifically permitted by this Rule.

In the event the requirements hereof should be applicable to a security also dealt in on another national securities exchange having requirements substantially equivalent hereto and an ETP Holder[, Equity ASAP Holder or ETP Firm] is a member or member firm of such other exchange and complies with such requirements of such other exchange, then such ETP Holder[, Equity ASAP Holder or ETP Firm] need not comply with the reporting provisions hereof.

Disciplinary Action By Other Organizations

Rule [6.14] *6.13*. Every ETP Holder[, Equity ASAP Holder or ETP Firm] shall promptly notify the Corporation in writing of any disciplinary action, including the basis therefore, taken by any national securities exchange or association, clearing corporation, commodity futures market or government regulatory body against the ETP Holder[, Equity ASAP Holder or ETP Firm] or its associated persons, and shall similarly notify the Corporation of any disciplinary action taken by the ETP Holder[, Equity ASAP Holder or ETP Firm] itself against any of its associated persons involving suspension, termination, the withholding of commissions or imposition of fines in excess of $2,500.00, or any other significant limitation on activities.

Officers and Employees Restricted

Rule [6.15] *6.14*(a)—No change.

(b) No salaried officer or employee of the Corporation or salaried officer or employee of any corporation in which the Corporation owns the majority of the corporate stock may purchase or sell for his own account or for the account of others any option contract which entitles the purchaser to purchase or sell any security described in paragraph (a) of Rule [6.15] *6.14*.

Miscellaneous Prohibitions

Rule [6.16] *6.15*. No ETP Holder[, Equity ASAP Holder, ETP Firm] or any participant therein shall:

(a)—No change.

[(b)—Deleted.]

[(c)] (*b*)—No change.

[Rule 6.17—Deleted.]

Trading Ahead of Customer Limit Orders

*Rule 6.16(a) No ETP Holder may accept and hold an unexecuted limit order from its customer (whether its own customer or a customer of another ETP Holder) and continue to trade on the Corporation the subject security for its own account at prices that would satisfy the customer's limit order, without executing that limit order; provided, however, that an ETP Holder may negotiate specific terms and conditions applicable to the acceptance of limit orders only with respect to limit orders that are:*

*(1) for institutional customer accounts, where such account is defined as the account of:*

*(A) a bank, savings and loan association, insurance company, or registered investment company;*

*(B) an investment adviser registered either with the Securities and Exchange Commission under Section 203 of the Investment Advisers Act of 1940 or with a state securities commission (or agency or office performing like functions); or*

*(C) any other entity (whether a natural person, corporation, partnership, trust or otherwise) with total assets of at least 450 million; or*

*(2) 10,000 shares or more, unless such orders are less than $100,000 in value.*

*(b) Paragraph (a) of this Rule shall not apply to a customer limit order if the limit order is marketable at the time it is received by the ETP Holder; provided, however, if the limit order was marketable when received and then becomes non-marketable, once the limit order becomes non-marketable, it becomes subject to the prohibitions of paragraph (a) of this Rule.*

*(c) Nothing in this Rule requires ETP Holders to accept limit orders from customers.*

*(d) For the purposes of this Rule, an ETP Holder that controls or is controlled by another ETP Holder shall be considered a single entity, absent appropriate information barriers, so that if a customer's limit order is accepted by one affiliate and forwarded to another affiliate for execution, the firms are considered a single entity.*

**Rule 7**

**Equities Trading**

**Section 1. [Definitions and] General Provisions**

[Rule 7.1—Deleted.]

Hours of Business

Rule *7.1* [7.2]. Unless otherwise ruled by the Board of Directors, the Corporation shall be open for the transaction of business daily except on Saturdays and Sundays. The hours at which trading sessions shall open and close shall be established by the Board.

Dealings upon the Corporation shall be limited to the hours during which the Corporation is open for the transaction of business. No ETP Holder[, Equity ASAP Holder or ETP Firm] shall make any bid, offer or transaction [on] through the facilities of the Corporation, or issue a commitment to trade through ITS [on] through the facilities of the Corporation before or after those hours, except that a *Market Maker* [specialist] may issue and receive pre-opening notifications and pre-opening responses, pursuant to the provisions of the Plan relating to the Pre-Opening Application of the Systems, before the official opening of the Corporation and loans of securities may be made after those hours.

[Commentary:]

[.01—Deleted.]

Holidays

Rule *7.2*[7.3].—No change.

[Rule 7.4–7.5—Deleted.]

Commissions

Rule *7.3*[7.6] (a). Fixed Rates. Nothing contained in the *Rules* [rules] of the Corporation or its practices shall be construed to require or authorize its ETP Holders[, Equity ASAP Holders, ETP Firms,] or any associated person, to agree or arrange, directly or indirectly, for the charging of fixed rates of commission for transactions effected on, or effected by the use of, the facilities of the Corporation.

(b) Acting as Broker. In all transactions in which an ETP Holder[, Equity ASAP Holder or ETP Firm] acts solely as a broker, the bills and confirmations rendered must so indicate, and all commissions charged, if any, shall be appropriately identified.

(c) Acting as Principal. In all transactions in which an ETP Holder[, Equity ASAP Holder or ETP Firm] acts as principal or in which the ETP Holder[, Equity ASAP Holder ETP Firm] or any of its [nominees,] Allied Persons, partners, approved persons or stockholder associates have an interest as principal in any manner, the bills and confirmations rendered must so indicate.

Ex-Dividend or Ex-Right Dates

Rule *7.4*[7.7]. Transactions in stocks, traded ''regular'' shall be ''ex-dividend'' or ''ex-rights'' as the case may be, on the second business day preceding the record date fixed by the company or the date of the closing of transfer books, except when the Board of Directors rules otherwise. Should such record date or such closing of transfer books occur upon a day other than a business day this *Rule* [rule] shall apply for the third preceding business day.

**[Section 2. Admission to and Conduct on the Trading Floor]**

[Rule 7.8—Deleted.]

**[Section 3. Units of Trading, Bids, Offers and Quotations]**

Trading Units

Rule *7.5*[7.9]. The unit of trading in stocks shall be *1* [100] share[s] and the unit of trading in bonds shall be $1,000 in par value thereof unless otherwise designated by the Corporation. *For stocks, 100 shares shall constitute a ''round lot,'' any amount less than 100 shares shall constitute an ''odd lot,'' and any amount greater than 100 shares that is not a multiple of a round lot shall constitute a ''mixed lot.'' For bonds, a* [A] designated unit of trading shall constitute a ''round lot[.]'' *and any* [Any] lesser amount shall constitute an ''odd lot.''

Trading Differentials

Rule *7.6*[7.10](a). The Corporation shall determine the trading differentials for equity securities traded on the Corporation.

Commentary

.01—No change.

.02 Notwithstanding Commentary .01, [an ETP Holder may trade on the Floor at increments of 1/32 or 1/64] *the Corporation may allow trading at smaller increments* in order to match bids and offers displayed by other markets for the purpose of preventing Intermarket Trading System trade-throughs.

.03—No change.

.04 The minimum price variation for orders generated from Profiles designated for the midpoint pricing service by the OptiMark System will be the variation of the midpoint price between the highest published bid and the lowest published offer displayed on the Consolidated Quotation System. Any executions resulting from processing Profiles designated for midpoint pricing will be priced and reported in increments as small as 1/64th or, upon conversion to decimals, one-half of the minimum price variation.

*.05 The minimum price variation (''MPV'') for equity securities traded on the Archipelago Exchange shall be 1/64 of $1.00 for those securities that are quoted in fractions and $0.01 for those equity securities that are quoted in decimals; provided, however, at all times the MPV shall be consistent with the Decimalization Implementation Plan.*

*.06 The minimum price improvement increment (''MPII'') on the Archipelago Exchange shall be equal to $0.01 or 10% of the spread, whichever is more.*

(b) Bonds. Bids or offers in bonds shall not be made at a lesser variation than 1/8 of 1% of the principal amount, except that the Corporation may fix a lesser variation in specific issues.

Transmission of Bids or Offers

Rule *7.7*[7.11](a). The names of ETP Holders [or ETP Firms] bidding for or offering securities [on] through the use of the facilities of the Corporation shall not be transmitted from the facilities of the Corporation to a non-holder of an ETP. No ETP Holder having the right to trade [on] through the facilities of the Corporation and who has been a party to or has knowledge of an execution shall be under obligation to divulge the name of the buying or selling firm in any transaction.

(b) Except as *otherwise permitted by these Rules* [stated in Rule 7.12(b)], no ETP Holder [or ETP Firm] shall transmit [on] through the facilities of the Corporation any information regarding a bid, offer or other indication of an order to a non-holder of an ETP until such bid, offer or other indication of an order has been disclosed and permission to transmit such information has been obtained from the originating ETP Holder [or ETP Firm].

[Rule 7.12—Deleted.]

Bid or Offer Deemed Regular Way

Rule *7.8* [7.13]—No change.

[Rule 7.14—Deleted.]

Execution Price Binding

Rule *7.9* [7.15]. *Notwithstanding Rules 7.10 and 7.11, the* [The] price at which an order is executed shall be binding notwithstanding the fact that an erroneous report in respect thereto may have been rendered. [A report shall not be binding if an order was not actually executed but was in error reported to have been executed; however, an order which was executed, but in error reported as not executed, shall be binding. No ETP Holder, Equity ASAP Holder or ETP Firm shall assume or pay any part of the difference between the price at which an order is executed and the price at which it may have been erroneously reported.]

Cancellation of Revisions in Transactions

Rule *7.10* 7.16. A sale made in *demonstrable* error and canceled by both parties *may be removed, if the parties do not object, subject to the approval of the Corporation* [is subject to removal, if there is no objection.]

[Commentary:]

[.01 Specialists and floor brokers are responsible for the satisfactory execution of orders accepted by them and] *Disagreements* [disagreements] with respect thereto shall be referred to the appropriate trading authority of the Corporation.

A dispute arising on bids, offers or sales if not settled by agreements between the parties interested, shall be settled by the Corporation.

*Clearly Erroneous Policy*

*Rule 7.11(a). Definition. For the purposes of this Rule, the terms of a transaction executed on the Corporation are ''clearly erroneous'' when there is an obvious error in any term, such as price, number of shares or other unit of trading, or identification of the security.*

*(b) Request for Corporation Review. An ETP Holder that receives an execution on an order that was submitted erroneously to the Corporation for its own or customer account may request that the Corporation review the transaction under this Rule. Such request for review shall be made via telephone and in writing via facsimile or e-mail. The telephone request should be submitted immediately and the written request should be submitted within fifteen (15) minutes of the time the trade in question was executed. Once the request has been received, an officer of the Corporation designated by the President shall*

*review the transaction under dispute and determine whether it is clearly erroneous, with a view toward maintaining a fair and orderly market and the protection of investors and the public interest. Each party to the transaction shall provide, on a timely basis, any supporting written information as may be reasonably requested by the designated officer to aid resolution of the matter.*

*(c) Review Procedures. Unless both parties (or party, in the case of a cross) to the disputed transaction agree to withdraw the initial written request for review, the transaction under dispute shall be reviewed, and a determination shall be rendered by the designated Corporation officer. If the officer determines that the transaction is not clearly erroneous, the officer shall decline to take any action in connection with the completed trade. In the event that the officer determines that the transaction in dispute is clearly erroneous, the officer shall declare the transaction null and void or modify one or more of the terms of the transaction to achieve an equitable rectification of the error that would place the parties in the same position, or as close as possible to the same position that they would have been in, had the error not occurred. The officer shall promptly notify the parties of the determination reached and shall issue a written resolution of the matter. The ETP Holder aggrieved by the officer's determination may appeal such determination in accordance with the provisions of Rule 10.13.*

*(d) System Disruption and Malfunctions. In the event of any disruption or a malfunction in the use or operation of any electronic communications and trading facilities of the Corporation, the Chief Executive Officer or the President may declare a transaction arising out of the use or operation of such facilities during the period of such disruption or malfunction null and void or modify the terms of these transactions. Absent extraordinary circumstances, any such action of the Chief Executive Officer or President pursuant to this subsection (d) shall be taken within thirty (30) minutes of detection of the erroneous transaction. Each ETP Holder involved in the transaction shall be notified as soon as practicable, and the ETP Holder aggrieved by the action may appeal such action in accordance with the provisions of Rule 10.13.*

[Rules 7.17–7.39—Deleted.]

[Rules 7.41–7.44—Deleted.]

[Rule 7.46—Deleted.]

Trading Halts Due to Extraordinary Market Volatility

Rule *7.12* [7.47] (a)–(c)—No change.

Commentary

.01–.02—No change.

.03 The reopening of trading following a trading halt under this Rule will be conducted pursuant to procedures adopted by the Corporation and communicated by notice to its ETP Holders[, Equity ASAP Holders, and ETP Firms].

.04 Nothing in this Rule should be construed to limit the ability of the Corporation to otherwise halt or suspend the trading in any stock or stocks traded on the Corporation pursuant to any other Corporation *Rule* [rule] or policy.

*Trading Suspensions*

*Rule 7.13.* Except as otherwise stated in Rule 5.5, the Chair of the Board or the President, or the officer designee of the Chair or the President, shall have the power to suspend trading in any and all securities traded on the Corporation whenever in his or her opinion such suspension would be in the public interest. No such action shall continue longer than a period of two days, or as soon thereafter as a quorum of Directors can be assembled, unless the Board approves the continuation of such suspension.

*Clearance and Settlement*

*Rule 7.14(a). Each ETP Holder shall either:*

*(1) Be a clearing firm;*

*(2) clear transactions on the Corporation through a clearing firm; or*

*(3) clear transactions through an entity duly authorized by the Corporation.*

*(b) An ETP Holder must give up the name of the clearing firm through which each transaction on the Corporation will be cleared. If there is a subsequent change in identity of the clearing firm through which the transaction on the Corporation will be cleared, the ETP Holder shall report such change to the Corporation at least five (5) business days in advance.*

*(c) Each clearing firm must be admitted to the Corporation as an ETP Holder by meeting the qualification requirements set forth above in Rule 2; provided, however, if the clearing firm has become an ETP Holder for the sole purpose of acting as a clearing firm on the Corporation, such clearing firm need not pay the regular ETP Holder fee. The clearing firm shall be responsible for the clearance of the transactions effected by each ETP Holder which gives up such clearing firm's name pursuant to a letter of authorization, letter of guarantee or other authorization given by such clearing firm to such ETP Holder, which authorization shall be submitted to the Corporation.*

*(d) Notwithstanding any other provisions contained in the Rule to the contrary, the Board may extend or postpone the time of the delivery of a transaction on the Corporation whenever in its opinion, such action is called for by the public interest, by just and equitable principles of trade or by the need to meet unusual conditions. In such case, delivery shall be effected at such time, place and manner as directed by the Board of Directors.*

Stock Option Transactions

Rule *7.15*[7.45](a). No *Market Maker* [specialist] nor his *or her* firm, nor any participant therein, shall, directly or indirectly, be interested in a pool dealing or trading in any security in which he *or she* is registered as *a Market Maker* [specialist].

(b) No *Market Maker* [specialist], nor his *or her* firm, nor any participant therein shall acquire, hold or grant, directly or indirectly, any interest in any option to buy or to sell or to receive or to deliver shares of any security in which he *or she* is registered as *a Market Maker* [specialist], unless such option is issued by the Options Clearing Corporation and is immediately reported to the Corporation in accordance with such procedures as may be prescribed by the Corporation.

Short Sales

Rule *7.16* [7.40](a) (1) Except as provided in subsection (d) hereof, no ETP Holder[, Equity ASAP Holder, or ETP Firm] shall for his, *her* or its own account or for the account of any other person, effect [on] through the facilities of the Corporation a short sale of any security for which trades are reported pursuant to a consolidated transaction reporting system operated in accordance with a plan declared effective under the Securities Exchange Act Rule *11Aa3–1* [17a–15] (a ''consolidated system'') (A) below the price at which the last sale thereof, regular way, was reported in such consolidated system, or (B) at such price unless such price is above the next preceding different price at which a sale of such security, regular way, was reported in such consolidated system.

(2) Except as provided in subsection (d) hereof, no ETP Holder[, Equity ASAP Holder, or ETP Firm] shall for his, *her* or its own account, or for the account of any other person, effect [on] through the facilities of the Corporation a short sale of any security not covered by paragraph (1) of this subsection (A) below the price at which the last sale of such security, regular way, was effected [on] through the facilities of the Corporation, or (B) at such price unless such price is above the next preceding different price at which a sale of such security, regular way, was effected [on] through the facilities of the Corporation.

(3) Notwithstanding paragraph (1) of this subsection (a), the Board of Directors of the Corporation, in its discretion, may determine that it is necessary or appropriate in the public interest or for the protection of investors that short sales in any security for which trades are reported in a consolidated system be subject to the *Rule* [rule] set forth in paragraph (2) hereof. Following any such designation of any such security by the Board of Directors, compliance with the terms of paragraph (2) shall constitute compliance with this subsection (a).

(b) Order Identification. No ETP Holder[, Equity ASAP Holder, or ETP Firm] of the Corporation shall, by the use of any facility of the Corporation, execute any sell order unless such order is indicated as either ''long'' or ''short''.

(c) Marking Orders. No ETP Holder[, Equity ASAP Holder, or ETP Firm] of the Corporation shall mark a sell order ''long'' unless (1) the security to be delivered after sale is carried in the account for which the sale is to be effected, or (2) such ETP Holder[, Equity ASAP Holder, or ETP Firm] is informed that the seller owns the security ordered to be sold, and as soon as is possible without undue inconvenience or expense, will deliver the security owned to the account for which the sale is to be effected.

(d) Exceptions. The provisions of subsection (a) hereof shall not apply to:

(1) Any sale by any person, for an account in which he *or she* has an interest, if such person owns the security sold and intends to deliver such security as soon as possible without undue inconvenience or expense;

(2) Any ETP Holder[, Equity ASAP Holder, or ETP Firm] in respect of a sale, for an account in which it has no interest, pursuant to an order to sell which is marked ''long'';

(3) Any sale of a security for which trades are reported in a consolidated system (except a sale to a stabilizing bid complying with Securities Exchange Act Rule *104* [10b–7]) by a registered *market maker* [specialist] in such security for its own account (i) effected at a price equal to or above the last sale, regular way, reported for such security pursuant to an effective transaction reporting plan; or (ii) effected at a price equal to the most recent offer communicated for the security by such registered specialist pursuant to the Securities Exchange Act Rule 11Ac1–1 if such offer, when communicated, was equal to or above the last sale, regular way, reported for such security pursuant to an effective transaction reporting plan. This exemption shall not be available for a short sale of any security not covered by paragraph (a)(1) of this Rule *7.16* [7.40];

(4) Any sale by *an odd lot dealer registered with the Corporation for such security* [a specialist] to offset odd lot orders of customers;

(5) Any sale by *an odd lot dealer registered with the Corporation for such security* [a specialist] to liquidate a long position which is less than a round lot, provided such sale does not change the position of such *Market Maker* [specialist] by more than the unit of trading;

(6) Any sale of a security for which trades are not reported in a consolidated system (except a sale to a stabilizing bid complying with Securities Exchange Act Rule *104* [10b–7]) effected with the approval of the Corporation which is necessary to equalize the price of such security on the Corporation with the current price of such security on another national securities exchange which is the principal exchange market for such security;

(7) Any sale of a security for a special arbitrage account by a person who then owns another security by virtue of which he *or she* is, or presently will be, entitled to acquire an equivalent number of securities of the same class as the securities sold, provided such sale, or the purchase which such sale offsets, is effected for the bona fide purpose of profiting from a current difference between the price of the security sold and the security owned and that such right of acquisition was originally attached to or represented by another security or was issued to all the holders of any class of securities of the issuer;

(8) Any sales of a security on the Corporation effected for a special international arbitrage account for the bona fide purpose of profiting from a current difference between the price of such security on a securities market not within or subject to the jurisdiction of the United States and on the Corporation, provided the seller at the time of such sale knows or, by virtue of information currently received, has reasonable grounds to believe that an offer enabling him *or her* to cover such sale is then available to him in such foreign securities market and intends to accept such offer immediately;

[(9) Any sale of a security effected in accordance with a special offering plan declared effective by the Securities and Exchange Commission pursuant to paragraph (d) of Securities Exchange Act Rule 10b–2; or]

(*9*)[(10)] Any sale by an underwriter, or any member of a syndicate or group participating in the distribution of a security, in connection with an over-allotment of securities, or any lay-off sale by such a person in connection with a distribution of securities through rights [pursuant to Securities and Exchange Act Rule 10b–8] or a standby underwriting commitment.

(11) Any sale of a security for which trades are reported in a consolidated system (except a sale to a stabilizing bid complying with the Securities and Exchange Act Rule *104* [10b–7]) by any broker or dealer, for his *or her* own account or for the account of any other person, effected at a price equal to the most recent offer communicated by such broker or dealer pursuant to the Securities and Exchange Act Rule 11Ac1–1 in an amount less than or equal to the quotation size associated with such offer, if such offer, when communicated, was (A) above the price at which the last sale, regular way, for such security was reported pursuant to an effective transaction reporting plan; or (B) at such last sale price, if such last sale price is above the next preceding different price at which a sale of such security, regular way, was reported pursuant to an effective transaction reporting plan. This exemption shall not be available for a short sale of any security not covered by paragraph (a)(1) of this Rule *7.16* 7.40.

For the purpose of paragraph (8) of this subsection (d) a depository receipt for a security shall be deemed to be the same security as the security represented by such receipt.

(e) Short Sales After ''Ex'' Date. In determining the price at which a short sale may be effected after a security goes ex-dividend, ex-rights or ex-any other distribution, all sales prices prior to ''ex'' date may be reduced by the value of such distribution.

(f) Covering Short Sales. No ETP Holder[, Equity ASAP Holder, or ETP Firm] of the Corporation shall lend, or arrange for the loan of any security for delivery to the broker for the purchaser after sale, or shall fail to deliver a security on the date delivery is due, if such ETP Holder[, Equity ASAP Holder, or ETP Firm] knows or has reasonable grounds to believe that the sale was effected, or will be effected, pursuant to an order marked ''long'' unless such ETP Holder[, Equity ASAP Holder, or ETP Firm] knows, or has been informed by the seller (i) that the security sold has been forwarded to the account for which the sale was effected, or (ii) that the seller owns the security sold, that it is then impracticable to deliver such security to such account and that delivery will be made as soon as is possible without undue inconvenience or expense. The provisions of this subsection (f) shall not apply to:

(1) The lending of a security by *an* [a] ETP Holder[, Equity ASAP Holder, or ETP Firm] through the medium of a loan to another ETP Holder[, Equity ASAP Holder, or ETP Firm]; or

(2) Any loan, or arrangement for the loan, of any security, or any failure to deliver any security if, prior to such loan, arrangement, or failure to deliver, the Corporation finds (A) that such sale resulted from a mistake made in good faith; (B) either that the condition of the market at the time the mistake was discovered was such that undue hardship would result from covering the transaction by a ''purchase for cash'' or that the mistake was made by the seller's broker and the sale was at a price permissible for a short sale under Rule *7.16* [7.40]; and (C) that due diligence was used to ascertain that the circumstances specified in clause (1) of Rule *7.16(c)* [7.40(c)] existed or to obtain the information specified in clause (2) thereof.

*Firm Orders and Quotes*

*Rule 7.17(a) Orders at Stated Prices and Sizes. No ETP Holder shall submit to the Corporation an order (including Q Orders) to buy from or sell to any person any security at a stated price and/or size unless such ETP Holder is prepared to, and, upon submission of an appropriate contra-side order, does, purchase or sell, as the case may be, at such price and/or size and under such conditions as are stated at the time of submission of such order to buy or sell.*

*(b) Firm Quotes. All bids made and all offers made shall be in accordance with the provisions of Rule 11Ac1–1 under the Securities Exchange Act of 1934, governing the dissemination of quotations for reported securities.*

*[Rule 7.18. Reserved.*

*[Rule 7.19. Reserved.*

[Rules 7.48–7.49—Deleted.]

[Rule 7.52—Deleted.]

[Rules 7.54–7.65—Deleted.]

*Section 2. Market Makers*

*Registration of Market Makers*

*Rule 7.20(a). No ETP Holder shall act as a Market Maker in any security unless such ETP Holder is registered as a Market Maker in such security by the Corporation pursuant to this Rule and the Corporation has not suspended or canceled such registration. Registered Market Makers are designated as dealers on the Corporation for all purposes under the Securities Exchange Act of 1934 and the rules and regulations thereunder.*

*(b) As applicant for registration as a Market Maker shall file an application in writing on such form as the Corporation may prescribe. Applications shall be reviewed by the Corporation, which shall consider such factors including, but no limited to capital operations, personnel, technical resources, and disciplinary history.*

*(c) An applicant's registration as a Market Maker Shall become effective upon receipt by the ETP Holder of notice of an approval of registration by the Corporation. In the event that an application is disapproved by the Corporation, the applicant shall have an opportunity to be heard upon the specific grounds for the denial, in accordance with the provisions of Rule 10.13.*

*(d) The registration of a Market Maker may be suspended or terminated by the Corporation upon a determination of any substantial or continued failure by such Market Maker to engage in dealings in accordance with Rule 7.23.*

*(e) Any registered Market Maker may withdraw its registration by giving written notice to the Corporation. Such withdrawal of registration shall become effective on the tenth business day following the Corporation's receipt of the notice. A Market Maker who fails to give a ten-day written notice of withdrawal, the ETP Holder shall not be permitted to re-register as a Market Maker for a period of six months.*

*Obligations of Market Maker Authorized Traders*

*Rule 7.21(a). General. MMATs are permitted to enter orders only for the account of the Market Maker for which they are registered.*

*(b) Registration of Market Maker Authorized Traders. The Corporation may, upon receiving an application in writing from a Market Maker on a form prescribed by the Corporation, register a person as a MMAT.*

*(1) MMAT's may be officers, partners, employees or other associated persons of ETP Holders that are registered with the Corporation as Market Maker.*

*(2) To be eligible for registration as a MMAT, a person must be successfully complete the General Securities Representative Examination (Series 7) and complete a training and certification program sponsored by the Corporation; provided, however, the requirement to complete the Series 7 Examination may be waived by the Corporation if the applicant MMAT has served as a dealer-specialist or market maker on a registered national securities exchange or association for at least two consecutive years within three years of the date of application.*

*(3) The Corporation may require a Market Maker to provide additional information the Corporation considers necessary to establish whether registration should be granted.*

*(4) The Corporation may grant a person conditional registration as a MMAT subject to any conditions it considers appropriate in the interests of maintaining a fair and orderly market.*

*(5) A Market Maker must ensure that a MMAT is properly qualified to perform market making activities, including but not limited to ensuring the MMAT has met the requirements set forth in paragraph (b)(2) of this Rule.*

*(c) Suspension or Withdrawal of Registration.*

*(1) The Corporation may suspend or withdraw the registration previously given to a person to be a MMAT if the Corporation determines that:*

*(A) the person has caused the Market Maker to fail to comply with the securities laws, rules and regulations or the Bylaws, Rules and procedures of the Corporation;*

*(B) the person is not properly performing the responsibilities of a MMAT.*

*(C) the person has failed to meet the conditions set forth under paragraphs (b) above; or*

*(D) the Corporation believes it is in the interest of maintaining fair and orderly markets.*

*(2) If the Corporation suspends the registration of a person as a MMAT, the Market Maker must not allow the person to submit orders into the Archipelago Exchange.*

*(3) The registration of a MMAT will be withdrawn upon the written request of the ETP Holder for which the MMAT is registered. Such written request shall be submitted on the form prescribed by the Corporation.*

*Registration of Market Makers in a Security*

*Rule 7.22(a). A Market Maker may become registered in a newly authorized security or in a security already admitted on the Corporation by filing a security registration form with the Corporation. Registration in the security shall become effective on the first business day following the Corporation's approval of the registration. In considering the approval of the registration of the Market Maker in a security, the Corporation may consider;*

*(1) the financial resources available to the Market maker;*

*(2) the Market Maker's experience, expertise and past performance in making markets, including the Market Maker's performance in other securities;*

*(3) the Market Maker's operational capability;*

*(4) the maintenance and enhancement of competition among Market Makers in each security in which they are registered;*

*(5) the existence of satisfactory arrangements for clearing the Market Maker's transactions;*

*(6) the character of the market for the security, e.g., price, volatility, and relative liquidity.*

*(b) A Market Maker's registration in a security may be terminated by the Corporation if the Market Maker fails to enter quotations in the security within five (5) business days after the Market Maker's registration in the security becomes effective.*

*(c) Voluntary Termination of Security Registration. A Market Maker may voluntarily terminate its registration in a security by providing the Corporation with a one-day written notice of such termination. A Market Maker that fails to give advanced written notice of termination to the Corporation may be subject to formal disciplinary action pursuant to Rule 10.*

*(d) The Corporation may suspend or terminate any registration of a Market Maker in a security or securities under this Rule whenever, in the Corporation's judgment, the interests of a fair and orderly market are best served by such action.*

*(e) An ETP Holder may seek review of any action taken by the Corporation pursuant to this Rule, including the denial of the application for, or the termination or suspension of, a Market Maker's registration in a security or securities, in accordance with Rule 10.13.*

*Obligations of Market Makers*

*Rule 7.23(a). General. ETP Holders who are registered as Market Makers in one or more securities traded on the Corporation must engage in a course of dealings for their own account to assist in the maintenance, insofar as reasonably practicable, of fair and orderly markets on the Corporation in accordance with this Rule. The responsibilities and duties of a Market Maker specifically include, but are not limited to, the following:*

*(1) Maintain continuous, two-sided Q Orders in those securities in which the Market Maker is registered to trade;*

*(2) Maintain adequate minimum capital in accordance with Rule 4.1;*

*(3) Remain in Good Standing with the Corporation;*

*(4) Inform the Corporation of any material change in financial or operational condition or in personnel.*

*(5) Clear and settle transaction through the facilities of a registered clearing agency. This requirement may be satisfied by direct participation, use of direct clearing services, or by entry into a correspondent clearing arrangement with another ETP Holder that clears trades through such agency.*

*(6) Enter and maintain a Cleanup Order in each security in which the Market Maker is registered as such for each Market Order Auction.*

*(b) A Market Maker must satisfy the responsibilities and duties as set forth in paragraph (a) of this Rule during the Core Trading Hours on all days in which the Corporation is open for business.*

*(c) If the Corporation finds any substantial or continued failure by a Market Maker to engage in a course of dealings as specified in paragraph (a) of this Rule, such Market Maker will be subject to disciplinary action or suspension or revocation of the registration by the Corporation in one or more of the securities in which the Market Maker is registered. Nothing in this Rule will limit any other power of the Board of Directors under the Bylaws, Rules, or procedures of the Corporation with respect to the registration of a Market Maker or in respect of any violation by a Market Maker of the provisions of this Rule. In accordance with Rule 10, an ETP Holder may seek review of actions taken by the Corporation pursuant to this Rule.*

*(d) Temporary Withdrawal. A Market Maker may apply to the Corporation to withdraw temporarily from its Market Maker status in the securities in which it is registered. The Market Maker must base its request on demonstrated legal or regulatory requirements that necessitate its temporary withdrawal, or provide the Corporation an opinion of counsel certifying that such legal or regulatory basis exists. The Corporation will act promptly on such request and, if the request is granted, the Corporation may temporarily reassign the securities to another Market Maker.*

*Rule 7.24. Reserved.*

*Registration of Odd Lot Dealers*

*Rule 7.25(a). Eligibility. Any Market Maker may become registered as an Odd Lot Dealer in any security by filing an odd lot registration form with the Corporation. Registration as an Odd Lot Dealers shall become effective on the first business day following the Corporation's approval of the registration. In considering the approval of the registration of the Market Maker as an Odd Lot Dealer in a security, the Corporation shall consider such factors including, but not limited to, financial resources, capital operations, personnel, technical resources and disciplinary history. If the Corporation denies an application to become an Odd Lot*

*Dealer in a security or securities, the applicant may seek review of the decision in accordance with Rule 10.13.*

*(b) Market Makers Registered in a Security. For each security in which a Market Maker is registered, the Market Maker must become an Odd Lot Dealer in that security.*

*(c) Obligations of Odd Lot Dealers. An Odd Lot Dealer must:*

*(1) Maintain an OLTO, as described in Rule 7.31(g), during each day in which the Corporation is open for business for each security in which the Odd Lot Dealer is registered as such; and*

*(2) Register and maintain registration as an Odd Lot Dealer in a minimum of 100 securities if the Odd Lot Dealer registers as such in any security for which it is not registered as a Market Maker.*

*(d) Termination of Odd Lot Dealer Registration. The Corporation may suspend or terminate an Odd Lot Dealer's registration in a security or securities:*

*(1) If the Corporation determines that the Odd Lot Dealer has substantially or continually failed to engage in dealings in accordance with paragraph (c); or*

*(2) If, in the Corporation's judgment, the interest of a fair and orderly market are best served by such action.*

*An ETP Holder may seek review of any such termination or suspension in accordance with Rule 10.*

*(e) Voluntary Termination of Registration. An Odd Lot Dealer may voluntarily terminate its registration as such in a security or securities by providing the Corporation with a one-day written notice of such termination. An Odd Lot Dealer that fails to give advance notice of termination to the Corporation may be subject to formal disciplinary action pursuant to Rule 10.*

*Limitations on Dealings*

*Rule 7.26(a) General. A Market Maker on the Corporation may engage in Other Business Activities, or it may be affiliated with a broker-dealer that engages in Other Business Activities, only if there is an Information Barrier (also commonly referred to as ''Chinese Wall'') between the market making activities and the Other Business Activities. ''Other Business Activities'' mean:*

*(1) conducting an investment banking or public securities business;*

*(2) making markets in the options overlying the security in which it makes markets; or*

*(3) functioning as a GAT.*

*(b) Information Barrier. For the purposes of this rule, an Information Barrier is an organizational structure in which:*

*(1) The market making functions are conducted in a physical location separate from the locations in which the Other Business Activities are conducted, in a manner that effectively impedes the free flow of communications between MMATs, and persons conducting the Other Business Activities. However, upon request and not on his/her own initiative, a MMAT performing the function of a Market Maker may furnish to persons at the same firm or an affiliated firm (''affiliated persons''), the same sort of market information that the MMAT would make available in the normal course of its market making activity to any other person. The MMAT must provide such information to affiliated persons in the same manner that he/she would make such information available to a non-affiliated person.*

*(2) There are procedures implemented to prevent the use of material non-public corporate or market information in the possession of persons on one side of the barrier from influencing the conduct of persons on the other side of the barrier. These procedures, at a minimum, must provide that:*

*(A) the MMAT performing the function of a Market Maker does not take advantage of knowledge of pending transactions, order flow information, corporate information or recommendations arising from the Other Business Activities; and*

*(B) all information pertaining to the Market Maker's positions and trading activities is kept confidential and not made available to persons on the other side of the Information Barrier.*

*(3) Persons on one side of the barrier may not exercise influence or control over persons on the other side of the barrier, provided that:*

*(A) the market making function and the Other Business Activities may be under common management as long as any general management oversight does not conflict with or compromise the Market Maker's responsibilities under the Rules of the Corporation; and*

*(B) the same person or persons (the ''Supervisor'') may be responsible for the supervision of the market making and the GAT functions of the same firm or affiliated firms in order to monitor the overall risk exposure of the firm or affiliated firms. While the Supervisor may establish general trading parameters with respect to both market making and other proprietary trading other than on an order-specific basis, the Supervisor may not:*

*(i) actually perform the function either of MMAT or GAT;*

*(ii) provide to any person performing the function of a GAT any information relating to market making activity beyond the information that a MMAT performing the function of a Market Maker may provide under subparagraph (b)(1), above; nor*

*(iii) provide a MMAT performing the function of Market Maker with specific information regarding the firm's pending transactions or order flow arising out of its GAT activities.*

*(c) Documenting and Reporting of Information Barrier Procedures. An ETP Holder implementing an Information Barrier pursuant to this Rule shall submit to the Corporation a written statement setting forth:*

*(1) The manner in which it intends to satisfy the conditions in paragraph (b) of this Rule, and the compliance and audit procedures it proposes to implement to ensure that the Information Barrier is maintained;*

*(2) The names and titles of the person or persons responsible for maintenance and surveillance of the procedures;*

*(3) A commitment to provide the Corporation with such information and reports as the Corporation may request relating to its transactions;*

*(4) A commitment to take appropriate remedial action against any person violating this Rule or the ETP Holder's internal compliance and audit procedures adopted pursuant to subparagraph (c)(1) of this Rule, and that it recognizes that the Corporation may take appropriate remedial action, including (without limitation) reallocation of securities in which it serves as a Market Maker, in the event of such a violation;*

*(5) Whether the ETP Holder or an affiliate intends to clear its proprietary trades and, if so, the procedures established to ensure that information with respect to such clearing activities will not be used to compromise the ETP Holder's Information Barrier, which procedures, at a minimum, must be the same as those used by the ETP Holder or the affiliate to clear for unaffiliated third parties; and*

*(6) That it recognizes that any trading by a person while in possession of material, non-public information received as a result of the breach of the internal controls required under this Rule may be a violation of Rules 10b–5 and 14e–3 under the Exchange Act or on or more other provisions of the Exchange Act, the rules thereunder or the Rules of the Corporation, and that the Corporation intends to review carefully any such trading of which it becomes aware to determine whether a violation has occurred.*

*(d) Approval of Information Barrier Procedures. The written statement required by paragraph (c) of this Rule must detail the internal controls that the ETP Holder will implement to satisfy each of the conditions stated in that Rule, and the compliance and audit procedures proposed to implement and ensure that the controls are maintained. If the Corporation determines that the organizational structure and the compliance and audit procedures proposed by the ETP Holder are acceptable under this Rule, the Corporation shall so inform the ETP Holder, in writing. Absent the Corporation finding an ETP Holder's Information Barrier procedures acceptable, a Market Maker may not conduct Other Business Activities.*

*(e) Clearing Arrangements. Subparagraph (c)(5) permits an ETP Holder or an affiliate of the ETP Holder to clear the ETP Holder's Market Maker transactions if it establishes procedures to ensure that information with respect to such clearing activities will not be used to compromise the Information Barrier. In this regard:*

*(1) The procedures must provide that any information pertaining to Market Maker securities positions and trading activities, and information derived from any clearing and margin financing arrangements, may be made available only to those employees (other than employees actually performing clearing and margin functions) specifically authorized under this Rule to have access to such information or to other employees in senior management positions who are involved in exercising general managerial oversight with respect to the market making activity.*

*(2) Any margin financing arrangements must be sufficiently flexible so as not to limit the ability of any Market Maker to meet market making or other obligations under the Corporation's Rules.*

*Rule 7.27. Reserved.*

*Rule 7.28. Reserved.*

*Section 3. Archipelago Exchange*

*Access*

*Rule 7.29(a). General.* The Archipelago Exchange shall be available for entry and execution of orders by Users with authorized access. To obtain authorized access to the Archipelago Exchange, each User must enter into a User Agreement.

*(b) Sponsored Participants. A Sponsored Participant may obtain authorized access to the Archipelago Exchange only if such access is authorized in advance by one or more Sponsoring ETP Holders as follows:*

*(1) Sponsored Participants must enter into and maintain customer agreements with one or more Sponsoring ETP Holders establishing proper relationship(s) and account(s) through which the Sponsored Participant may trade on the Archipelago Exchange. Such customer agreement(s) must incorporate the Sponsorship Provisions set forth in paragraph (2) below.*

*(2) For a Sponsored Participant to obtain and maintain authorized access to the Archipelago Exchange, a Sponsored Participant and its Sponsoring ETP Holder must agree in writing to the following Sponsorship Provisions:*

*(A) Sponsored Participant and its Sponsoring ETP Holder must have entered into and maintained a User Agreement with Archipelago Exchange, L.L.C. The Sponsoring ETP Holder must designate the Sponsored Participant by name in its User Agreement as such.*

*(B)* Sponsoring ETP Holder acknowledges and agrees that

(i) All orders entered by the Sponsored Participants and any person acting on behalf of or in the name of such Sponsored Participant and any executions occurring as a result of such orders are binding in all respect on the Sponsoring ETP Holder and

*(ii) Sponsoring ETP Holder is responsible for any and all actions taken by such Sponsored Participant and any person acting on behalf of or in the name of such Sponsored Participant.*

*(C) Sponsored ETP Holder shall comply with the PCXE Certificate of Incorporation, Bylaws, Rules and procedures with regard to the Archipelago Exchange and Sponsored Participant shall comply with PCXE Certificate of Incorporation, Bylaws, Rules and procedures with regard to the Archipelago Exchange, as if Sponsored Participant were an ETP Holder.*

*(D) Sponsored Participant shall maintain, keep current and provide to the Sponsoring ETP Holder a list of Authorized Traders who may obtain access to the Archipelago Exchange on behalf of the Sponsored Participant.*

*(E) Sponsored Participant shall familiarize its Authorized Traders with all of the Sponsored Participant's obligations under this Rule and will assure that they receive appropriate training prior to any use or access to the Archipelago Exchange.*

*(F) Sponsored Participant may not permit anyone other than Authorized Traders to use or obtain access to the Archipelago Exchange.*

*(G) Sponsored Participant shall take reasonable security precautions to prevent unauthorized use of access to the Archipelago Exchange, including unauthorized entry of information into the Archipelago Exchange, or the information and data made available therein. Sponsored Participant understands and agrees that Sponsored Participant is responsible for any and all orders, trades and other messages and instructions entered, transmitted or received under identifiers, passwords and security codes of Authorized Traders, and for the trading and other consequences thereof.*

*(H) Sponsored Participant acknowledges its responsibility to establish adequate procedures and controls that permit it to effectively monitor its employees, agents and customers' use and access to the Archipelago Exchange for compliance with the terms of this agreement.*

*(I) Sponsored Participant shall pay when due all amounts, if any, payable to Sponsoring ETP Holder, Archipelago Exchange, L.L.C., PCXE or any other third parties that arise from the Sponsored Participants access to and use of the Archipelago Exchange. Such amounts include, but are not limited to applicable exchange and regulatory fees.*

*(3) The Sponsoring ETP Holder must provide the Corporation with a Notice of Consent acknowledging its responsibility for the orders, executions and actions of its Sponsored Participant at issue.*

*Authorized Traders*

*Rule 7.30(a). An ETP Holder shall maintain a list of ATs who may obtain access to the Archipelago Exchange on behalf of the ETP Holder or the ETP Holder's Sponsored Participants. The ETP Holder shall update the list of ATs as necessary. ETP Holders must provide the list of ATs to the Corporation upon request.*

*(b) An ETP Holder must have reasonable procedures to ensure that all ATs comply with the trading Rules and procedures related to the Archipelago Exchange and all other Rules of the Corporation.*

*(c) An ETP Holder must suspend or withdraw a person's status as an AT if the Corporation has determined that the person has caused the ETP Holder to fail to comply with the Rules of the Corporation and the Corporation has directed the ETP Holder to suspend or withdraw the person's status as an AT.*

*(d) An ETP Holder must have reasonable procedures to ensure that the ATs maintain the physical security of the equipment for accessing the facilities of the Corporation to prevent the improper use of access to the systems, including unauthorized entry of information into the systems.*

*Orders and Modifiers*

Rule 7.31.

*(a) Market Order. An order to buy or sell a stated amount of a security that is to be executed at the best price obtainable when the order reaches the Corporation.*

*(b) Limit Order. An order to buy or sell a stated amount of a security at a specified price or better. A ''marketable'' limit order is a limit order to buy (sell) at or above (below) the consolidated best offer (bid) for the security.*

*(c) Day Order. An order to buy or sell which, if not executed, expires at the end of the day on which it was entered.*

*(d) Good-Till-Canceled (''GTC'') Order. An order to buy or sell which remains in effect until it is executed or canceled. The Corporation will modify GTC Orders as appropriate in light of stock events (e.g., stock split or reverse split).*

*(e) Immediate-or-Cancel Order. A market or limit order that is to be executed in whole or in part as soon as such order is received, and the portion not so executed is to be treated as canceled.*

*(f) Tracking Order.*

*(1) Any User may submit an instruction to the Archipelago Exchange for the parameters of a Tracking Order at any time during the day. The parameters shall include:*

*(A) the maximum aggregate size, which is the aggregate size of all partial orders generated in the Tracking Order Process for a particular security that the User is willing to trade on that day;*

*(B) the maximum tradeable size, which is the maximum size of any partial order generated in response to an order entering the Tracking Order Process that the User is wiling to trade on that day;*

*(C) the price in relation to the NBBO; and*

*(D) the relevant security.*

*(2) Once a User has submitted an instruction for the parameters of the Tracking Order, the instruction will remain in effect until closing or until the User has traded its maximum aggregate size for that day, whichever comes first.*

*(3) The Tracking Order Process rotation is as follows: Users who have submitted an instruction for the parameters of a Tracking Order will be assigned trades on a price/time rotating basis, such that within each price level, trades shall be assigned by the time the Users' instructions are received by the Archipelago Exchange. Within each price level, the first User to send an instruction for a Tracking Order will be the first User to be assigned a trade in the rotation process. For each order that enters the Tracking Order Process, the Tracking Order Process will rotate once through the Users in the rotation pattern. In each rotation, the User will be responsible for one trade up to the User's maximum tradeable size.*

*(4) The order described in the User's Tracking Order instruction will only be generated if:*

*(A) an unfilled round or mixed lot order enters the Tracking Order Process and*

*(B) it is such User's turn as determined by the Tracking Order Process rotation pattern.*

*(5) Each partial order generated in a rotation is a limit order in which:*

*(A) the price is set or better than the NBBO at the time the unfilled order enters the Tracking Order Process, based on the User's parameters; and*

*(B) the size is (i) equal to the User's maximum tradeable size if the unfilled order is equal to or larger than the maximum tradeable size; or (ii) equal to the size of the unfilled order if the unfilled order is smaller than the maximum tradeable size.*

*(6) A User may modify the parameters of the instruction for the Tracking Order from time to time, as the Corporation permits.*

*(7) Whenever in the judgment of the Corporation, because of an influx of orders, a system malfunction or other unusual conditions or circumstances, the interests of a fair and orderly market so require, the Corporation may suspend the Tracking Order Process. The Tracking Order Process shall resume when the Corporation determines that the conditions supporting the suspension no longer exist.*

*(g) Odd Lot Tracking Order.*

*(1) Only Odd Lot Dealers may submit an Odd Lot Tracking Order or ''OLTO'' to the Archipelago Exchange.*

*(2) An OLTO is a Tracking Order, as described in paragraph (f), in which:*

*(A) the maximum aggregate size is unlimited;*

*(B) the maximum tradeable size is 99 shares;*

*(C) the price is set at the NBBO; and*

*(D) the security is one in which the ODD Lot Dealer is registered as such; and*

*(E) the instruction must be in effect for the duration of Core Trading Hours;*

*provided, however, the order described in the OLTO instruction will only be generated if*

*(1) an unfilled odd lot market order enters the Odd Lot Tracking Order Process pursuant to Rule 7.37(c); or*

*(2) an odd lot limit order causes a locked market as described in Rule 7.56.*

*(h) Working Order. Any order with a conditional or undisplayed price and/or size designated as a ''Working Order'' by the Corporation, including, without limitation:*

*(1) All-or-None Order. A limit order which is to be executed in its entirety or not at all.*

*(2) Discretionary Order. An order to buy or sell a stated amount of a security at a specified, undisplayed price (the ''discretionary price''), in addition to at a specified, displayed price (''displayed price.'')*

*(3) Reserve Order. A limit order with a portion of the size displayed and with a reserve portion of the size (''reserve size'') that is not displayed on the Corporation.*

*(i) Directed Order. Any market or limit order to buy or sell which has been directed to a particular Market Maker by the User.*

*(j) Directed Fill. Any Market Maker may submit a standing instruction to the Archipelago Exchange for the parameters of a Directed Fill, including, but not limited to, the size of the order, the Users that may send such Market Maker a Directed Order, the price improvement algorithm and the period of time the instruction is effective. The Market Maker's Directed Fill described in the instruction will only be generated in response to a Directed Order directed to such Marker Maker. The Directed Fill is a limit order with (1) a size that is equal to or less than the size of the Directed Order and (2) a price that improves the BBO by an automatically preset amount, which must be equal to or greater than the MPII, pursuant to a price improvement algorithm; provided, however, the Directed Fill will not be generated if the price is not equal to or better than the NBBO. A Marker Maker may modify the parameters of the instruction for a Directed Fill from time to time, as the Corporation permits.*

*(k) Q Order. A limit order submitted to the Archipelago Exchange by a Market Maker. A Q Order may not be a Working Order.*

*(l) Stop Order. A Stop Order to buy becomes a market order when a transaction in the security occurs on the Corporation or on another national securities exchange or association at or above the stop price. A Stop Order to sell becomes a market order when a transaction in the security occurs on the Corporation or on another national securities exchange or association at or below the ''stop'' price. Stop Orders shall not have standing in any Order Process in the Arca Book and shall not be displayed.*

*(m) Stop Limit Order. A Stop Limit Order to buy becomes a limit order when a transaction in the security occurs on the Corporation or on another national securities exchange or association at or above the stop price. A Stop Limit Order to sell becomes a limit order when a transaction in the security occurs on the Corporation or on another national securities exchange of association at or below the stop price.*

(n) Do Not Reduce. A limit order to buy, a Stop Order to sell or a Stop Limit Order to sell which is not to be reduced by the amount of an ordinary cash dividend on the ex-dividend date. A Do Not Reduce Order applies only to ordinary cash dividends; it should be reduced for other distributions such as when a stock goes ''ex'' a stock dividend or ex rights.

(o) Do Not Increase. A limit order to buy, a Stop Order to sell or a Stop Limit Order to sell which is not to be increased in shares on the ex-date as a result of a stock dividend or stock distribution.

(p) Fill-or-Return. An order to buy or sell that is to be executed in whole or in part on the Corporation, and the portion not so executed is to be cancelled, without routing the order to another market center or market participant.

(q) Timed Order. An order to buy or sell which is to remain in effect from and/or until a specified time, after which such order or the portion thereof not executed is to be treated as cancelled.

(r) FIll-or-Return Plus. An order to buy or sell that is to be executed in whole or in part on the Corporation, and the portion not so executed is to be cancelled, without routing the order to another market center or market participant. In the event any portion of the order is not executed on the Corporation and must be cancelled, the Archipelago Exchange, after canceling the unexecuted portion of the order, shall send an administrative message to an ETP Holder designated by the order entry ETP Holder informing the designated ETP Holder that portion of the order was cancelled.

(s) Cross Order. A two-sided order with instructions to match the identified buy-side with the identified sell-side at a specified price (the ''cross price''). For the purposes of this Rule 7.31(s), an order of block size shall have the same meaning as set forth in Rule 7.57. A Cross Order will be executed as follows; provided, however, no Cross Orders shall be matched at the cross price without interacting with any orders in the Arca Book unless the cross price improves the BBO by the MPII:

(l) If the cross price is equal to or better than the NBBO.

(A) and the cross price is between the BBO, the Cross Order shall be matched at the cross price without interacting with any orders in the Arca Book.

(B) and the cross price is at the BBO.

(i) first, the Cross Order shall be matched at the displayed price, against all pre-existing displayed orders in the Display Order Process of the Arca Book with priority according to Rule 7.36; and

(ii) then, any remainder of the Cross Order shall be matched at the cross price.

(2) If the cross price is outside the NBBO,

(A) and the cross price is between the BBO,

(i) first, the portion of the Cross Order that may be executed in another market shall be routed away for execution pursuant to Section 5 of Rule 7; and

(ii) then, the remainder of the Cross Order shall be matched at the cross price without interacting with any orders in the Arca Book.

(B) and the cross price is at the BBO,

(i) first, the portion of the Cross Order that may be executed in another market shall be routed away for execution pursaunt to Section 5 of Rule 7;

(ii) then, the Cross Order shall be matched, at the displayed price, against all pre-existing displayed orders in the Display Order Process of the Arca Book with priority according to Rule 7.36; and

(iii) then, any remainder of the Cross Order shall be matched at the cross price.

(C) and the cross price is outside the BBO,

(i) and the NBBO is better than the BBO,

(l) first, the portion of the Cross Order that may be executed in another market shall be routed away for execution pursuant to Section 5 of Rule 7;

(2) then, the Cross Order shall be matched,

(a) at the displayed price (if the Cross Order is smaller than block size) or at the cross price (if the Cross Order is of block size), against all pre-existing orders in the Display Order Process of the Arca Book with priority according to Rule 7.36; and

(b) at the price at which the Working Order is represented in the Arca Book, against all pre-existing orders in the Working Order Process of the Arca Book with priority according to Rule 7.36.

The Cross Order shall be matched against any displayed and/or Working Order at a better price level before being matched to any displayed and/or Working Order at the next best price level.

*(2) then, the portion of the Cross Order that may be executed in another market shall be routed away for execution pursuant to Section 5 of Rule 7;*

(3) then, any remainder of the Cross Order shall be matched at the cross price.

*(t) Auction-Only Limit Order. A limit order that is to be executed only during the Market Order Auction.*

*(u) Cleanup Order.*

*(1) Only Market Makers may submit Cleanup Orders to the Archipelago Exchange.*

*(2) Cleanup Orders must be submitted to the Archipelago Exchange before 6:15 a.m. (Pacific Time) and remain in effect until the conclusion of the Market Order Auction.*

*(3) Cleanup Orders must be 2500 shares in size.*

*(4) Cleanup Orders must be entered as both buy or sell orders, provided, however, the Cleanup Order may only be executed on the side of the market opposite the Imbalance.*

*(5) Cleanup Orders will be executed at the Indicative Match Price as of the time of the Market Order Auction.*

*(6) Cleanup Orders will only be executed if:*

*(A) There is an Imbalance of Market Orders at the conclusion of the Market Order Auction, as provided in Rule 7.35; and*

*(B) The Imbalance is less than or equal to aggregate size of all Cleanup Orders in the relevant security.*

*(7) If there is an Imbalance and Cleanup Orders will be executed based on the criteria in paragraph (6), the market orders which make up the Imbalance will be divided equally among, and allocated to, all Market Makers registered in the relevant security and executed against such Market Makers' Cleanup Orders.*

*(8) If no Imbalance exists at the time of the Market Order Auction, all Cleanup Orders shall be cancelled at that time.*

*(v) NOW Order. A Limited Price Order that is to be executed in whole or in part on the Corporation, and the portion not so executed shall be routed pursuant to Rule 7.37(d) only to one or more NOW Recipients for immediate execution as soon as the order is received by the NOW Recipient. Any portion not immediately executed by the NOW Recipient shall be cancelled. If a NOW Order is not marketable when it is submitted to the Corporation, it shall be cancelled. NOW Orders may not be Directed Orders.*

*(w) PNP Order (Post No Preference). A limit order to buy or sell that is to be executed in whole or in part on the Corporation, and the portion not so executed is to be ranked in the Arca Book, without routing any portion of the order to another market center; provided, however, the Corporation shall cancel a PNP Order that would lock or cross the NBBO.*

*(x) Primary Only Order (PO Order). For exchange-listed securities only, a market order that is to be routed as a market-on-open order to the primary market for participation in the primary market opening process. A PO Order must be entered before 6:28 a.m. (Pacific Time) and it will not be included in the Market Order Auction.*

*Order Entry*

*Rule 7.32. Users may enter into the Archipelago Exchange the types of orders listed in Rule 7.31; provided, however, no User may enter an order other than a Fill-or-Return, Fill-or-Return Plus or PNP Order unless the User or the User's Sponsoring ETP Holder has entered into a Routing Agreement.*

*ETP Holder Users*

*Rule 7.33. Consistent with Rules of the Corporation, ETP Holder Users of the Archipelago Exchange may enter proprietary orders and agency orders for the account of a customer. Proprietary orders accepted by the Archipelago Exchange from ETP Holder Users are subject to the same display and execution processes as agency orders. An ETP Holder User that enters a proprietary order into the Archipelago Exchange shall mark the order with the appropriate designator to identify the order as proprietary.*

*Trading Sessions*

*Rule 7.34(a) Sessions. The Archipelago Exchange shall have three trading sessions each day the Corporation is open for business:*

*(1) Opening Session. The Opening Session shall begin at 5:00:00 a.m. (Pacific Time) and conclude at the commencement of the Core Trading Session. The Opening Auction and the Market Order Auction shall occur during the Opening Session.*

*(2) Core Trading Session. The Core Trading Session shall begin for each security at 6:30:00 a.m. (Pacific Time) or at the conclusion of the Market Order Auction, whichever comes later, and conclude at 1:00:00 p.m. (Pacific Time).*

*(3) Late Trading Session. The Late Trading Session shall begin following the conclusion of the Core Trading Session and conclude at 5:00:00 p.m. (Pacific Time).*

*(b) Market Maker Obligations. During the Core Trading Session, Market Makers will be obligated to enter Q Orders in securities in which they are registered in accordance with Rule 7.23 by the time Core Trading Hours begin. During the Opening Session and the Late Trading Session, Market Makers are not obligated to enter Q Orders in securities in which they are registered. Market Makers are required to enter at least one Cleanup Order for all securities in which they are registered for each Market Order Auction.*

*(c) Order Designation. Any Day Order entered into the Archipelago Exchange may remain in effect for one or more consecutive trading sessions on a particular day. For each Day Order entered into the Archipelago Exchange, the User must designate for which trading session(s) the order will remain in effect. Any GTC Order entered into the Archipelago Exchange will remain in effect only during Core Trading Sessions, unless the User indicates that the GTC Order will remain in effect for the Opening and/or Late Trading Sessions.*

*(d) Orders Permitted in Each Session.*

*(1) During the Opening Session:*

*(A) Orders eligible for the Display Order Process (other than Q Orders) and for the Working Order Process that have been designated as available for the Opening Session are eligible for entry into and execution on the Archipelago Exchange.*

*(B) Stop Orders are not eligible for execution during the Opening Session.*

*(C) Users may enter market and Auction-Only Limit Orders for inclusion in the Market Order Auction. Market orders and Auction-Only Limit Orders are not eligible for execution during the Opening Session, except during the Market Order Auction.*

*(D) Neither the Directed Order Process nor the Tracking Order Process is available during the Opening Session. For the purposes of the Opening Session, market Directed Orders are included in the Market Order Auction.*

*(E) NOW Orders are eligible for execution during the Opening Session, provided, however, NOW Orders are not eligible for the Opening Auction or the Market Order Auction.*

*(F) PNP Orders are eligible for execution during the Opening Session.*

*(2) During the Core Trading Session, market orders, Stop Orders, NOW Orders, PNP Orders and orders eligible for the Directed Order, Display Order, Working Order and Tracking Order Processes are eligible for entry into and execution on the Archipelago Exchange.*

*(3) During the Late Trading Session:*

*(A) Orders eligible for the Display Order Process (other than Q Orders) and for the Working Order Process, including NOW Orders and PNP Orders, than have been designated as available for the Late Trading Session are eligible for entry into and execution on the Archipelago Exchange.*

*(B) Market orders and Stop Orders are not eligible for execution during the Late Trading Session.*

*(C) The Directed Order and Tracking Order Processes are not available during the Late Trading Session.*

*(e) Customer Disclosures. No ETP Holder may accept an order from a non-ETP Holder for execution in the Opening or Late Trading Session without disclosing to such non-ETP Holder that:*

*(1) except for market orders eligible for execution during the Market Order Auction, Limited Price Orders are the only orders that are eligible for execution during the Opening and Late Trading Sessions;*

*(2) an order must be designated specifically for trading in the Opening and/or Late Trading Session to be eligible for trading in the Opening and/or Late Trading Session; and*

*(3) extended hours trading involves material trading risks, including the possibility of lower liquidity, high volatility, changing prices, unlinked markets, an exaggerated effect from news announcements, wider spreads and any other relevant risk.*

*The disclosures required pursuant to this subparagraph (e)(3) may take the following form or such other form as provides substantially similar information:*

*1. Risk of Lower Liquidity. Liquidity refers to the ability of market participants to buy and sell securities. Generally, the more orders that are available in a market, the greater the liquidity. Liquidity is important because with greater liquidity it is easier for investors to buy or sell securities, and as a result, investors are more likely to pay or receive a competitive price of securities purchased or sold. There may be lower liquidity in extended hours trading as compared to regular market hours. As a result, your order may only be partially executed, or not at all.*

*2. Risk of Higher Volatility. Volatility refers to the changes in price that securities undergo when trading. Generally, the higher the volatility of a security, the greater its price swings. There may be greater volatility in extended hours trading than in regular market hours. As a result, your order may only be partially executed, or not at all, or you may receive an inferior price in extended hours trading than you would during regular markets hours.*

*3. Risk of Changing Prices. The prices of securities traded in extended hours trading may not reflect the prices either at the end*

*of regular market hours, or upon the opening of the next morning. As a result, you may receive an inferior price in extended hours trading than you would during regular market hours.*

*4. Risk of Unlinked Markets. Depending on the extended hours trading system or the time of day, the prices displayed on a particular extended hours system may not reflect the prices in other concurrently operating extended hours trading systems dealing in the same securities. Accordingly, you may receive an inferior price in one extended hours trading system than you would in another extended hours trading system.*

*5. Risk of New Announcements. Normally, issues make news announcements that may affect the price of securities after regular market hours. Similarly important financial information is frequently announced outside of regular market hours. In extended hours trading, these announcements may occur during trading, and if combined with lower liquidity and higher volatility, may cause an exaggerated and unsustainable effect on the price of a security.*

*6. Risk of Wider Spreads. The spread refers to the difference in price between what you can buy a security for and what you can sell it for. Lower liquidity and higher volatility in extended hours trading may result in wider than normal spreads for a particular security.*

*(f) Trades on the Archipelago Exchange executed and reported outside of the Core Trading Session shall be designated as .T trades.*

*Opening Session Auctions*

*Rule 7.35(a) Order Entry and Cancellation Before Opening Auction*

*(1) Users may submit any orders to the Archipelago Exchange beginnings at 4:30 am (Pacific Timer). Any such Limited Price Orders designated for the Opening Session will be queued until 5:00 am (Pacific Time) at which time they will be eligible to be executed pursuant to paragraph (b) of this Rule. Any such market orders will be queued until the Market Order Auction at which time they will be executed pursuant to paragraph (c) of this Rule.*

*(2) Only limited priced orders designated for the Opening Session will be eligible for the Opening Auction. Market orders entered before the Opening Auction will participate in the Market Order Auction. Limited Price Orders not designated for the Opening Session will become eligible for execution pursuant to Rule 7.37 at the commencement of the Core Trading Session.*

*(3) Beginning at 4:30 am (Pacific Time), and various times thereafter as determined from time to time by the Corporation, the Indicative Match Price of the Opening Auction, and any Imbalance associated therewith, shall be published via electronic means as determined from time to time by the Corporation.*

*(4) Orders that are eligible for the Opening Auction may not be cancelled between 4:58 am (Pacific Time) and the conclusion of the Opening Auction.*

*(b) Opening Auction.*

*(1) At 5:00 am (Pacific Time), Limited Price Orders designated for the Opening Session are matched and executed in the Opening Auction.*

*(2) The orders in the Opening Auction shall be executed at the Indicative Match Price as of the time of the Opening Auction.*

*(3) Orders that are eligible for, but not executed in, the Opening Match shall become eligible for the Opening Session immediately upon conclusion of the Opening Auction.*

*(c) Market Order Auction.*

*(1) Publication of Indicative Match Price and Imbalances*

*(A) Beginning at 5:00 am (Pacific Time), and various times thereafter as determined from time to time by the Corporation, the Indicative Match Price of the Market Order Auction and the volume available to trade at such price, shall be published via electronic means as determined from time to time by the Corporation. If such a price does not exist (i.e., there is an Imbalance of market orders), the Archipelago Exchange shall indicate via electronic means that an Indicative Match Price does not exist.*

*(B) Beginning at 5:00 am (Pacific Time), and various times thereafter as determined from time to time by the Corporation, the market order Imbalance associated with the Market Order Auction, if any, shall be published via electronic means as determined from time to time by the Corporation.*

*(C) If the difference between the Indicative Match Price and the closing price of the price of the previous trading day's normal market hours, as determined by the Consolidated Tape, is equal to or greater than a pre-determined amount, as determined from time to time by the Corporation, the Archipelago Exchange will assign a ''SIG'' designator to such Indicative Match Price and publish such designator via electronic means as determined from time to time by the Corporation.*

*Example: (1) Market order to buy 5000 shares;*

*(2) Auction-Only Limit Order to sell 1000 at 50;*

*(3) Limit order to sell 1000 at 50.50; and*

*(4) Limit order to sell 500 at 50.75.*

*The Archipelago Exchange will publish an Indicative Match Price of 50.75, a volume of 2500 shares and a buy Imbalance of 2500 shares.*

*Example: (1) Market order to buy 3000 shares;*

*(2) Market order to sell 1000;*

*(3) Limit order to sell 1000 at 41.00; and*

*(4) Limit order to sell 1000 at 41.25.*

*The Archipelago Exchange will publish an Indicative Match price of 41.25 and a volume of 3000 shares and will not publish an Imbalance.*

*(2) Reduction of Imbalances*

*(A) Any Imbalance in the Market Order Auction may be reduced by new orders, entered on the side of the market opposite the Imbalance, pursuant to the following priority:*

*(i) Market orders;*

*(ii) Limited Price Orders eligible for the Opening Session;*

*(iii) Limited Price Orders entered before 6:28 am (Pacific Time);*

*(iv) Auction-Only Limit Orders; and*

*(v) Cleanup Orders.*

*(B) Between 6:28 am (Pacific Time) and the conclusion of the Market Order Auction, Limited Price Orders eligible for the Opening Session or the Core Trading Session may be cancelled, but market orders, Auction-Only Limit Orders and Cleanup Orders may not be cancelled.*

*(C) Between 6:28 am (Pacific Time) and the conclusion of the Market Order Auction, market orders and Auction-Only Limit Orders may not be entered on the same side as the Imbalance. Market orders and Auction-Only Limit Orders may be entered on the opposite side of the Imbalance, however, any time before the Market Order Auction.*

*(3) Determination of Market Order Auction Price*

*(A) If there is no Imbalance, orders will be executed in the Market Order Auction at the Indicative Match Price as of 6:30 am (Pacific Time).*

*(B) If an Imbalance exists, or if an equilibrium exists between buy market orders and sell market orders, as many buy market orders and sell market orders as possible shall be matched, on a time priority basis,*

*(i) at the midpoint of the NBBO at 6:30 am (Pacific Time), in the case of exchange-listed securities for which the Corporation is not the primary market; or*

*(ii) at the midpoint of the NBBO at 6:30 am (Pacific Time), in the case of Nasdaq-listed securities, provided that the NBBO is not crossed; or*

*(iii) at the midpoint of the first uncrossed NBBO after 6:30 am (Pacific Time), in the case of Nasdaq securities in which the NBBO is crossed but the BBO is not crossed by the NBBO; or*

*(iv) at the bid (offer) of the BBO that was crossed prior to 6:30 am (Pacific Time), in the case of Nasdaq securities in which the BBO is crossed by a market participant; or*

*(v) at the indicative Match Price as of 6:30 am (Pacific Time) in the case of those issues for which the Corporation is the primary market. If equilibrium exists between buy and sell market orders, the match price shall be the last Corporation sale price in the security regardless of the trading session, provided that, if the last Corporation sale price is inferior to the BBO, the match price shall be the Corporation bid (offer).*

*Such executions shall be designated with a modifier to identify them as Market Order Auction trades. The market orders that are eligible for, but not executed in the Market Order Auction, shall become eligible for execution in the Core Trading Session immediately upon conclusion of the Market Order Auction.*

*(d) Reserved.*

*(e) Transition to Core Trading Session.*

*(1) Limited Price Orders entered before 6:28 am (Pacific Time) shall participate in the Market Order Auction. Limited Price Orders designated for the Core Trading Session entered after 6:28 am (Pacific Time) shall become eligible for execution at 6:30 am (Pacific Time) or at the conclusion of the Market Order Auction, whichever is later.*

*(2) Market orders entered after 6:28 am (Pacific Time) and before 6:30 am (Pacific Time), which are eligible for either the Market Order Auction or the Core Trading*

*Session, shall become eligible for execution at 6:30 am (Pacific Time) or at the conclusion of the Market Order Auction, whichever is later, unless otherwise provided in Rule 7.30(c)(2)(C).*

*(3) Stop Orders entered before or during the Opening Session become eligible for execution at 6:30 am (Pacific Time) or at the conclusion of the Market Order Auction, whichever is later.*

*Order Ranking and Display*

*Rule 7.36. The Archipelago Exchange shall display to Users and other market participants all non-marketable limit orders in the Display Order Process. The Archipelago Exchange will also disseminate current consolidated quotations/last sale information, and such other market information as may be made available from time to time pursuant to agreement between the Corporation and other market centers.*

*(a) Ranking. Orders of Users shall be ranked and maintained in the Display Order Process and/or Working Order Process of the Arca Book according to price-time priority, such that within each price level, all orders shall be organized by the time of entry in the following manner.*

*(1) Display Order Process. Within the Display Order Process:*

*(A) Limit orders, with no other conditions, shall be ranked based on the specified limit price and the time of original order entry.*

*(B) The displayed portion of Reserve Orders (not the reserve size) shall be ranked at the specified limit price and the time of order entry. If the displayed portion of the Reserve Order is decremented in its entirety, the displayed portion of the Reserve Order shall be refreshed for the displayed amount from the reserve portion and shall be submitted and ranked at the specified limit price and the new time that the displayed portion of the order was refreshed.*

*(C) Discretionary Orders shall be ranked based on the displayed price (not the discretionary price) and the time of order entry. If a Discretionary Order is decremented, it remains ranked based on the displayed price and the time of original order entry.*

*(2) Working Order Process. Within the Working Order Process:*

*(A) The reserve portion of Reserve Orders shall be ranked based on the specified limit price and the time of original order entry. After the displayed portion of a Reserve Order is refreshed from the reserve portion, the reserve portion remains ranked based on the original time of order entry, while the displayed portion is sent to the Display Order Process with a new time-stamp.*

*(B) Discretionary Orders shall be ranked based on the displayed price and the time of original order entry. After a Discretionary Order is decremented, it remains ranked as described above.*

*(C) All-or-None Orders shall be ranked based on the specified limit price and the time of order entry.*

*(b) Display. All Orders at all price levels in the Display Order Process of the Arca Book shall be displayed to all Users and other market participants on an anonymous basis.*

*(c) Dissemination. The best-ranked displayed order(s) to buy and the best ranked displayed order(s) to sell in the Arca Book and the aggregate displayed size of such orders associated with such prices shall be collected and made available to quotation vendors for dissemination pursuant to the requirements of Rule 11Ac1–1 under the Exchange Act.*

*Order Execution*

*Rule 7.37. Subject to the restrictions on short sales under Rule 10a–1 under the Exchange Act, like-priced orders, bids and offers shall be matched for execution by following Steps 1 through 5 in this Rule; provided, however, for an execution to occur on any Order Process, the price must be equal to or better than the NBBO, unless the Archipelago Exchange has routed orders to all away markets at the NBBO.*

*(a) Step 1: Directed Order Process. During Core Trading Hours only, orders may be matched and executed in the Directed Order Process as follows:*

*(1) If a User submits a marketable Directed Order to the Archipelago Exchange and the User's designated Market Maker has a standing instruction for a Directed Fill to the Archipelago Exchange, the Directed Order shall be executed against the Directed Fill of the designated Market Maker.*

*(2) If a User submits a marketable Directed Order to the Archipelago Exchange and the User's designated Market Maker has not submitted an instruction for a Directed Fill, the Directed Order shall enter the Display Order Process, as described in subsection (b) of this Rule.*

*(3) If a User submits any order other than a marketable Directed Order to the Archipelago Exchange, the User's order immediately shall enter the Display Order Process, as described in subsection (b) of this Rule, without interacting with any Directed Fills.*

*(b) If an incoming marketable order has not been executed in its entirety pursuant to paragraph (a) of this Rule, any remaining part of the order shall be routed to the Display Order Process.*

*(1) Step 2: Display Order Process.*

*(A) An incoming marketable order shall first attempt to be matched for execution against orders the Display Order Process at the display price of the resident order for the total amount of stock available at that price or for the size of the incoming order, whichever is smaller. For the purposes of this subsection, the size of an incoming Reserve Order includes the displayed and reserve size and the size of the portion of the Reserve Order resident in the Display Order Process is equal to its displayed size. If the incoming marketable order has not been executed in its entirety, the remaining part of the order shall be routed to the Working Order Process.*

*(B) An incoming order that is not marketable shall enter the Working Order Process to be executed against any Discretionary Orders at or better than the NBBO.*

(2)*Step 3: Working Order Process.*

*(A) An incoming marketable order shall be matched for execution against orders in the Working Order Process in the following manner:*

*(i) An incoming marketable order shall be matched against orders within the Working Order Process in the order of their ranking, at the price of the displayed portion (or in the case of an All-or-None Order, at the limit price), for the total amount of stock available at that price or for the size of the incoming order, whichever is smaller.*

*(ii) If the BBO is outside the NBBO and any Discretionary Order(s) within the Working Order Process have a discretionary price equal to or better than the NBBO, the incoming order shall execute against such Discretionary Order(s) at the NBBO up to the size of the smaller of the two orders.*

*(iii) If an incoming marketable order is a Discretionary Order or a Reserve Order and its prices overlap with the prices of a Discretionary Orders in the Working Order Process, then the orders will be executed at the display price of the order that was entered first up to the size of the smaller of the two orders. For the purposes of this subsection, the size of the incoming Reserved order includes the displayed and reserve size.*

*(iv) If the incoming marketable order has not been executed in its entirety, the remaining part of the order shall be routed to the Tracking Order Process.*

*(B) An incoming order is not marketable shall be matched for execution against orders in the Working Order Process in the following manner:*

*(i) The incoming order shall be matched against any Discretionary Orders in the Working Order Process that have discretionary prices that would satisfy an otherwise displayable incoming Limited Price Order. The execution shall occur at the limited price of the incoming order.*

*(ii) If the incoming order is a Discretionary Order and its prices overlap with the prices of a Discretionary Order in the Working Order Process, then the orders will be executed at the discretionary price of the incoming order that would be the best price available for the order entered first.*

*(C) If any change in the NBBO or other available away trading interest would cause a potential match between the away order and an order in the Working Order Process, a commitment to trade shall be sent to that market center or market participant pursuant to Step 5 below.*

*(c) Step 4: Tracking Order Process. During Core Trading Hours only, orders may be matched and executed in the Tracking Order Process as follows: If an order has not been executed in its entirety pursuant to paragraphs (a) and (b) of this Rule, the Archipelago Exchange shall match and execute any remaining part of the order in the Tracking Order Process in the following manner; provided, however, any portion of an order received from another market center or market participant shall be cancelled immediately:*

*(1) If the unfilled order is a mixed lot or round lot order, the order shall be matched against any Tracking Orders pursuant to the rotation pattern described in Rule 7.31(f)(3) for immediate execution thereafter. After the order has been matched against any Tracking Orders, if the order has not been executed in its entirety and the remaining part of the order is an odd lot, the odd lot order shall been executed in the Odd Lot Tracking Order Process, as described in paragraph (2).*

*(2)* If the unfilled order is an odd lot, the order shall be matched in the Odd Lot Tracking Order Process against any OLTOs pursuant to the rotation pattern described in Rule 7.31(f)(3) for immediate execution thereafter.

*(d) Step 5: Routing Away.*

*(1) If an order has not been executed in its entirety pursuant to paragraphs (a) through (c) of this Rule and it has been designated as a Fill-or-Return, Fill-or-Return Plus Order or PNP Order, the Order shall be cancelled, without routing the order to another market center or market participant.*

*(2) If an order has not been executed in its entirety pursuant to paragraphs (a) through (c) of this Rule and it has not been designated as a Fill-or-Return, Fill-or-Return Plus Order or PNP Order, the order shall be routed for execution as follows:*

*(A) The order shall be routed, either in its entirety or as component orders, to another market center or market participant as a limit order priced at the quote published by the market center or market participant.*

*(B) the Archipelago Exchange shall attempt to match the part of the order that has not been routed away against then available trading interest in the Archipelago Exchange for an internal fill by following Steps 1 through 4 as set forth in paragraphs (a) through (c) above.*

*(C) Orders routed to other market centers or market participants shall remain outside the Archipelago Exchange for a prescribed time period during which they may be executed (in whole or in part) or declined. While an order remains outside the Archipelago Exchange, it shall have no time standing, relative to other orders received from Users at the same price which may be executed against the Arca Book. Requests from Users to cancel their orders while the order is routed away to another market center or market participant and remains outside the Archipelago Exchange shall be processed, subject to the applicable trading rules of the relevant market center or market participant.*

*(D)* In the event that a marketable order routed from the Archipelago Exchange to another market center or market participant is not executed in its entirety at the other market center or market participant's quote (*i.e.*, all attempts at the fill are declined or timed-out), the Archipelago Exchange shall attempt to match the residual or declined market order against then available trading interest in the Archipelago Exchange for an internal fill by following Steps 1 through 4 as set forth in paragraphs (a) through (c) above. Any remaining unmatched trading interest shall be rerouted to another market center or market participant at the next available displayed price level pursuant to this paragraph (d)(2) above.

*(E) When routing an order in an Eligible Security away to another market center, the Corporation shall utilize such electronic intermarket linkages and order delivery facilities as may be approved by the Board of Directors from time to time, subject to such applicable requirements as may be agreed to with the relevant market center.*

*(e) If an order has not been executed in its entirety after following Steps 1–5, the order shall be ranked in the Arca Book pursuant to Rule 7.36.*

*Odd and Mixed Lots*

*Rule 7.38(a) Order Types.*

*(1) Odd Lots. All odd lot orders submitted by Users to the Archipelago Exchange must be market orders or limit orders, where such orders are subject to no additional conditions (e.g., odd lot orders may not be Working Orders, Directed Orders, Directed Fills, Tracking Orders, etc.), provided, however, Odd Lot Dealers may submit OLTOs.*

*(2) Mixed Lots. Mixed lot orders submitted by Users to the Archipelago Exchange may be any order type supported by the Archipelago Exchange.*

*(b) Ranking and Execution. Round lot, mixed lot and odd lot orders are treated in the same manner in the Archipelago Exchange; provided, however, the Tracking Order Process treats odd lot orders in a different manner from mixed lot and round lot orders.*

*(c) Prohibitions. It shall be considered conduct inconsistent with just equitable principle for ETP Holders to engage in the following actions:*

*(1) Combining odd lot orders given by different customers into a round lot order or orders unless specifically requested to do so by the customers giving the orders;*

*(2) Unbundling round lots for the purpose of entering odd lot limit orders in comparable amounts;*

*(3) Failing to aggregate odd lot orders into round lots when such orders are for the same account or for various accounts in which there is a common monetary interest; and*

*(4) Entering both buy and sell odd lot limit orders in the same stock before one of the orders is executed for the purpose of capturing the spread in the stock.*

*Interaction with PCXE Application of the OptiMark System*

*Rule 7.39(a) The information from the Arca Book (including Working Orders), but not the orders themselves, shall be submitted to the PCXE Application at all relevant times during Core Trading Hours, as set forth in Rule 7.47.*

*(b) The Archipelago Exchange may receive Immediate-or-Cancel Orders from the PCXE Application as set forth in Rule 7.48. Such Immediate-or-Cancel Orders shall be treated as a User order once submitted to the Archipelago Exchange.*

*Trade Execution and Reporting*

*Rule 7.40. Executions occurring as a result of orders matched against the Arca Book shall be reported by the Corporation to an appropriate consolidate transaction reporting system. Executions occurring as a result of orders routed away from the Archipelago Exchange shall be reported to an appropriate consolidated transaction reporting system by the relevant reporting market center. The Archipelago Exchange shall promptly notify Users of all executions of their orders as soon as executions take place.*

*Clearance and Settlement*

*Rule 7.41. The details of each transaction executed within the Archipelago Exchange shall be automatically processed for clearance and settlement on a locked-in basis. ETP Holders need not separately report their transactions to the Corporation for trade comparison purposes. All transactions effected by a Sponsored Participant shall be cleared and settle, using the relevant Sponsoring ETP Holder's mnemonic (or its clearing firm's mnemonic as applicable).*

*Limitation of Liability*

*Rule 7.42(a). Neither the Corporation, any affiliate of the Corporation, Archipelago Exchange, L.L.C., nor any affiliate of the Archipelago Exchange, L.L.C., shall be liable to Users for any loss, damages, claim or expense:*

*(1) growing out of the use or enjoyment of the Archipelago Exchange; or*

*(2) arising from or occasioned by any inaccuracy, error or delay in, or omission of or from the collection, calculation, compilation, maintenance, reporting or dissemination of any information derived from the Archipelago Exchange, resulting either from any act or omission by the Corporation, any affiliate of the Corporation, Archipelago Exchange, L.L.C., or any affiliate of Archipelago Exchange, L.L.C., or from any act condition or cause beyond the reasonable control of the Corporation, any affiliate of the Corporation, Archipelago Exchange, L.L.C., or any affiliate of Archipelago Exchange, L.L.C., including, but not limited to, flood, extraordinary weather conditions, earthquake or other acts of God, fire, war, insurrection, labor dispute, accident, action of government, communications or power failure, or equipment or software malfunction.*

*(b) Each ETP Holder expressly agrees, in consideration of the issuance of the ETP, to release and discharge the Corporation, any affiliate of the Corporation, Archipelago Exchange, L.L.C., and any affiliate of the Archipelago Exchange, L.L.C., and any officers, directors, employees and agents thereof, of and from all claims and damages arising from their acceptance and use of the Archipelago Exchange.*

*(c) Neither the Corporation, any affiliate of the Corporation, Archipelago Exchange, L.L.C., nor any affiliate of the Archipelago Exchange, L.L.C., makes any express or implied warranties or conditions to Users as to results that any person or party may obtain from the Archipelago Exchange for trading or for any other purpose, and all warranties of merchantability or fitness for a particular purpose or use, title, and non-infringement with respect to the Archipelago Exchange are hereby disclaimed.*

*Rule 7.43. Reserved.*

*Rule 7.44. Reserved.*

**Section *4* [10]. *PCXE Application of the OptiMark System* [Automatic Execution Systems]**

[Rule 7.70—Deleted.]

PCX Equities, Inc. Application of the OptiMark System

Definitions

Rule *7.45*[7.71](a). Definitions. Whenever and wherever used herein, unless the context requires otherwise, the following terms shall be deemed to have the meanings indicated:

(1)—No change.

(2) The term ''Designated Broker'' shall mean a broker-dealer that has been issued an ETP [or Equity ASAP] by the Corporation who has been designated by a non-ETP [or non-Equity ASAP] User to execute, clear and settle transactions resulting from the Application.

[(3) The term ''Eligible Securities'' shall mean the equity securities currently listed or traded on the Corporation.]

*(3)*[4] The term ''Supplemental Account Agreement'' shall mean the form of Agreement between a non-ETP [or non-Equity ASAP] User and a Designated Broker under which Orders of the non-ETP [or non-Equity ASAP] User and resulting transactions will be executed, cleared and settled, using the Designated Broker's mnemonic (or its clearing broker's mnemonic as applicable).

*(4)* [(5)]—No change.

*(5)* [(6)] The term ''Orders'' shall mean one or more orders generated from a Cycle at specific prices and sizes at which execution immediately may occur; *provided, however, an Order to be matched against a limit order from the Arca Book shall be routed to the Archipelago Exchange as an Immediate-or-Cancel Order.* Orders in Eligible Securities for execution on the Corporation or other ITS participating market centers shall be in round lots equal to or greater than 1,000 shares, except for Orders resulting from processing COS Profiles (as defined below) and those Profiles created from the *Arca Book* [PCX Specialist's book] that may be in any round lot size, and in price increments conforming to the requirements of the Corporation's [rules] *Rules* and policies applicable to all orders executed on the *Archipelago Exchange* [Floor]; provided, however, that Orders may be generated from central processing of the Profiles designated for the midpoint service by the OptiMark System in conformance with the trading differential in Rule [7.10] *7.6*(a), Commentary .04. Such orders shall be considered ''immediate or *cancel* [Cancel]'' orders within the meaning of the Corporation's Rule *7.31* [7.4] and shall include the following information:

(A) the stock ticker symbol;

(B) a designation as ''buy,'' ''sell long,'' or ''sell short''; and

(C) such other information as may be required by the Board

*(6)* [(7)] The term ''Profile'' shall mean the expression of trading interest received by the OptiMark System in the form of a satisfaction profile that shows the User's degree of satisfaction (expressed as a number between zero and one) to trade at each coordinate of the price/size grid. The term ''COS Profile'' means the satisfaction profile generated by the OptiMark system from processing quotations of other market centers from the COS that can be accessed by ITS/CAES. *The term ''Arca Profile'' means the satisfaction profile generated by the OptiMark System from processing the Arca Book.*

*(7)* [(8)] the term ''PCX*E* Application'' (or ''Application'') shall mean the Corporation's trading service facility consisting of certain electronic communications and information services of the OptiMark System provided on a non-exclusive basis through the necessary communications interfaces (''PCX Interfaces'') between the OptiMark System and the Corporation's computerized order system and other facilities to permit execution of Orders in Eligible Securities and to receive executions and reports in respect thereof, all in accordance with these Rules and other applicable Rules and policies of the Corporation.

*(8)* [(9)]—No change.

*(9)* [(10)]—No change.

Access

Rule *7.46* [7.72]. The PCX*E* Application shall be available for all interested ETP Holders[, Equity ASAP Holders, and ETP Firms] that decide to become Users. [The Corporation will assure that each PCX Specialist is provided with appropriate access to the PCX Application for the purpose of submitting Profiles from the Specialist's Post.] A non-ETP *Holder* User may obtain access to the PCX*E* Application only if such access is authorized in advance by one or more Designated Brokers in accordance with the terms of the applicable Supplemental Account Agreement and the Designated Broker Consent Agreement. Both agreements shall be in force before a non-ETP [or non-Equity ASAP] User may be given the authorization to obtain access to the PCX*E* Application. At a minimum, the Supplemental Account Agreement and the Designated Broker Consent Agreement shall include any applicable credit limits imposed by the Designated Broker on the non-ETP *Holder* User; the Designated Broker's undertaking that it is responsible for that non-ETP *Holder* [or non-/Equity ASAP] User's Orders and resulting transactions; and such other terms and conditions that may be agreed to from time to time. The Corporation shall be provided with a written statement from the Designated Broker acknowledging its responsibility for such Orders and resulting transactions.

Entry of Profiles and Generation of Orders

Rule *7.47* [7.73] (a)—No change.

(b) *Interaction with the Archipelago Exchange. The information from the Arca Book (including Working Orders) shall be submitted to the PCXE Application at all relevant times during Core Trading Hours in the form of Arca Profiles.* [Specialist Obligations. Specialists must ensure that at all relevant times during regular trading hours, their best bids and offers (whether reflecting limit orders or the Specialist's own interest) will be included in the OptiMark System as Profiles.]

(c)—No change.

Commentary

.01. For the purpose of this *Rule* [rule], a profile for the proprietary account of an ETP Holder[, Equity ASAP Holder, or ETP Firm] (other than for a *Market Maker* [specialist or floor broker]) will be deemed ''principle exempt'' and therefore receive the priority treatment of agency profiles but only when such person does not hold or have knowledge that his *or her* firm or any participant therein holds or has knowledge of a customer's profile or order at the same price or better. If the ETP Holder[, ETP Firm or Equity ASAP Holder] holds or has knowledge of such customer profile or order, the ETP Holder[, ETP Firm or Equity ASAP Holder] will be deemed non-exempt and must designate any proprietary profile as ''principal non-exempt.''

.02. After screening for price and standing, the matching algorithm will rank the following categories of profiles and order types for time priority purposes:

(1) *Arca Profiles* [PCX Book—limit orders from the PCX limit order book];

(2) Agency—other public customer profiles, non-ETP [or non-Equity ASAP] profiles, and ''principal-exempt'' proprietary profiles entered directly into OptiMark;

(3) Principal—proprietary profiles submitted by *Market Makers* [specialists and floor brokers], and ''non-exempt'' ETP Holders[, Equity ASAP Holders, and ETP Firms] ([all three] considered ''principal non-exempt''); and

(4) [Consolidated Quote System ('']CQS['') profiles.

(d) Frequency. Cycles respecting an Eligible Security shall be scheduled at one or more specified times throughout the trading day after the opening of the market in that security and prior to the closing of the market. The maximum frequency with which Cycles may take place throughout the trading day shall be 90 seconds, while the minimum shall be once a day. The exact frequency of Cycles as to any given *Corporation* [PCX] Security shall be determined by OptiMark Services, Inc., based on the general characteristics of the security, the robustness of the associated Profile flow over a period and the current level of interest expressed by Users, and may be subsequently altered in response to subsequent developments in the above-stated market circumstances. Any change in the frequency of Cycles will be effective upon three days' notice to the User in advance; provided, however, that at all relevant times, the Corporation finds any such scheduling of Cycles to be commensurate with the demand for the PCX*E* Application among ETP Holders[, Equity ASAP Holders or ETP Firms] and their customers and also consistent with the safeguards in place to ensure system capacity and integrity.

Order Execution and Reporting

Rule *7.48(a)* [7.74]—No change.

*(b) Notwithstanding paragraph (a) of this Rule, any Order generated from a Cycle representing matches involving Arca Profiles shall be routed to the Archipelago Exchange for execution against the relevant the Archipelago Exchange limit order as an Immediate-or-Cancel Order. If the relevant Archipelago Exchange limit order is no longer available, the Order generated from the Cycle shall be automatically canceled.*

Hours of Operation

Rule *7.49* [7.75]. The PCX*E* Application will be available for execution of Orders and routing of ITS commitments during the regular trading hours.

Errors

Rule *7.50* [7.76]. Whenever a User discovers an error in a transaction resulting from the PCX*E* Application, such error may be corrected in accordance with the rules of the applicable market center and clearing

arrangement through which the transaction is executed and settled.

Trading Suspension and Halts

Rule *7.51* [7.77]. In the event of a suspension in trading of an Eligible Security pursuant to Rule *7.12* [7.46(b)], the Corporation shall suspend the related trading activities respecting that security through the PCX*E* Application. In addition, the trading activities through the PCX*E* Application respecting all Eligible Securities shall halt whenever the President or, in the President's absence, Chief Operating Officer or other PCX*E* Officer(s) as the President may designate, determines that market conditions warrant such a halt. The Corporation may suspend the trading activities through the PCX*E* Application relating to one or more Eligible Securities at any other time upon consultation with OptiMark Technologies, Inc., if deemed necessary and proper to preserve system capacity and integrity.

Limitation of Liability

Rule *7.52* [7.78](a). Limitation of Liability. Neither the Corporation, any affiliate, nor any operator, licensor or administrator of the OptiMark System shall have any liability to Users or Designated Brokers for any loss, damages, claim or expense arising from or occasioned by any inaccuracy, error or delay in, or omission of or from:

(1) the PCX*E* Application of the OptiMark System or

(2) the collection, calculation, compilation, maintenance, reporting or dissemination of any information derived from the PCX*E* Application or the OptiMark System, resulting either from any act or omission by the Corporation or any affiliate, or any operator, licensor or administrator of the OptiMark System or from any act, condition or cause beyond the reasonable control of the Corporation or any affiliate, or any operator, licensor or administrator of the OptiMark System, including, but not limited to, flood, extraordinary weather conditions, earthquake or other acts of God, fire, war, insurrection, riot, labor dispute, accident, action of government, communications or power failure, or equipment of software malfunction.

(b) Neither the Corporation, any affiliate, nor any operator, licensor or administrator of the OptiMark System makes any express or implied warranties or conditions to Users or Designated Brokers as to results that any person or party may obtain from the PCX*E* Application for trading or for any other purpose, and all warranties of merchantability or fitness for a particular purpose or use, title, and non-infringement with respect to the PCX*E* Application are hereby disclaimed.

*Rule 7.53. Reserved.*

*Rule 7.54. Reserved.*

**Section *5* [9]. Intermarket Trading System Plan**

Definitions

Rule *7.55* [7.66](a). Definitions. Whenever and wherever used herein, unless the context requires otherwise, the following terms shall be deemed to have the meanings indicated:

(1)–(4)—No change.

(5) The term ''Pre-Opening Application'' shall mean the application of the System which permits a market maker in one participating market, who wishes to open his *or her* market in an Eligible Listed Security, to obtain from other market makers registered in that security in other participating markets, any pre-opening interests such other market makers might decide to disclose as set forth in the Plan.

(6)–(10)—No change.

[(11)—Deleted.]

Intermarket Trading System Application

(b) Provisions of the Plan. The Corporation has agreed to comply to the best of its ability, and, absent reasonable justification or excuse, to enforce compliance by its ETP Holders, [Equality ASAP Holders and ETP Firms,] with the provisions of the Plan. In this connection, the following shall apply:

Intermarket Trading System (ITS)

(1) All transactions effected through ITS shall be on a ''regular way'' basis. Each transaction effected through ITS shall be cleared and settled through a clearing agency registered with the Securities and Exchange Commission which maintains facilities through which ITS transactions may be compared and settled and which agrees to supply each participating market center with data reasonably requested in order to permit such market center to enforce compliance by its *members* [ETP Holders, Equity ASAP Holders and ETP Firms] with the provisions of the Act, the rules and regulations thereunder, and the rules of such market center.

(2) Any ''commitment to trade'', which is transmitted by an ETP Holder [or ETP Firm], *via the facilities of the Corporation,* to another participating market center through ITS, shall be firm and irrevocable for the period of time applicable to such commitment. All such commitments to trade shall:

(A) specify the security which is the subject of the commitment*;* [,]

(B) designate the commitment as either a commitment to buy or a commitment to sell*;* [,]

(C) specify the amount of the security to be bought or sold, which amount shall be for one unit of trading or any multiple thereof*;* [,]

(D) specify the price at or below which the security is to be bought or the price at or above which the security is to be sold, or specify that the commitment is a commitment to trade ''at the market;*''* [,''']

(E) designate the commitment ''short'' or ''short exempt'' whenever it is a commitment to sell which, if it should result in an execution in the market of the receiving market center, would result in a short sale to which the provisions of paragraph (a) of Rule 10a–1 under the Act would apply*; and* [,]

(F)—No change.

(3) No change.

(4) The ETP Holder [or ETP Firm on the Floor] who made the bid or offer which is sought by a commitment to trade received [on the Floor] through ITS shall accept such commitment to trade*, via the facilities of the Corporation,* up to the amount of the bid or offer if the bid or offer is still available [on the Floor] when the commitment to trade is received by such ETP Holder [or ETP Firm], *via the facilities of the Corporation,* unless acceptance is precluded by the *Rules* [rules] of the Corporation. In the event that the bid or offer which is sought by a commitment to trade is no longer available *through the facilities of the Corporation* [on the Floor] when the commitment is received, but a new bid or offer is available *through the facilities of the Corporation* [on the Floor] which would enable the commitment to trade to be executed at a price which is more favorable than the price specified in such commitment, then the ETP Holder [or ETP firm] who [has] made *the* [such new] bid or offer shall accept*, via the facilities of the Corporation,* such commitment at the price, and up to the amount of, *the new* [his] bid or offer, unless acceptance is precluded by the *Rules* [rules] of the Corporation.

(5) Any ETP Holder [or ETP Firm] who receives*, via the facilities of the Corporation,* a commitment to trade through ITS from another market center and who intends to reject that commitment shall notify*, via the facilities of the Corporation,* the market center from which the commitment was sent of such rejection as promptly as possible.

(6) Any commitment to trade received [on the Floor] through ITS and any execution thereof and any commitment to trade issued by an ETP Holder [or ETP Firm]*, via the facilities of the Corporation,* through ITS shall be subject to such *Rules* [rules] as the Corporation may from time to time determine.

Pre-Opening Application

(7) The provisions of subparagraph (1) above shall also be applicable to any transaction effected through the Pre-Opening Application. The Pre-Opening Application applies in two instances. First, it applies whenever a market maker in any Participant *market* [Market], in arranging an opening transaction in his *or her* market in a System security, anticipates that the opening transaction will be at a price that represents a change from the security's ''previous day's consolidated closing price'' at more than the ''applicable price change.'' Second, it applies whenever an ''indication of interest'' (i.e., an anticipated opening price range) is sent to the CTA Plan Processor as required or permitted by the CTA Plan or a Participant market's rules.

(8) Openings

*(A)* [(i)] Notification Requirements

*(i)* [(A)] Applicable Price Change

(1) Initial Notification—Whenever a *Market Maker* [specialist], in arranging an opening transaction *through the facilities of* [on] the Corporation in any Eligible Listed Security, anticipates that the opening transaction [on] through the facilities of the Corporation will be at a price that represents a change from the security's previous day's consolidated closing price of more than the ''applicable price change'' (as defined below), he *or she, via the facilities of the Corporation,* shall notify the other Participant markets of the situation by sending a ''pre-opening notification'' through the System. Thereafter, the *Market Maker* [specialist] shall not open the security in his *or her* market until not less than three minutes after *the* [his]

transmission of the pre-opening notification.
The ''applicable price changes'' are:

| Security | Consolidated closing price | Applicable price change (more than) |
|---|---|---|
| Network A | Under $15 | .10 or ⅛ point |
| | $15 or over* | .25 or ¼ point |
| Network B | Under $5 | .10 or ⅛ point |
| | $5 or over* | .25 or ¼ point |
| —A pre-opening notification shall: (A) be designated as a pre-opening notification (''IND''); (B) identify the participant market (''P''), the *Market Maker* [specialist] and the security (''XYZ''); and (C) indicate the ''applicable price range'' by being formatted as a standardized pre-opening administrative message as follows: IND P/XYZ (RANGE) | | |
| The price range shall not exceed the ''applicable price range'' shown below: | | |
| Network A | Under $50 | .50 or ½ point |
| | $50 or over* | 1 point or, for stocks trading in decimals, 1.00 |
| Network B | Under $10 | .50 or ½ point |
| | $10 or over* | 1 point or, for stocks trading in decimals, 1.00 |
| The price range also shall not straddle the previous day's consolidated closing price, although it may include it as an endpoint (*e.g.,* a.10–.60 or ⅛–⅝ price range would be permissible if the previous day's consolidated closing price were .10 or .60 or ⅛ or ⅝, but not if the closing price were .25, or .40 or .50 or ¼, or ⅜ or ½). | | |

*If the previous day's consolidated closing price of a Network A Eligible Security exceeded $100 and the security does not underlie an individual stock option contract listed and currently trading on a national securities exchange, the ''applicable price range'' is two dollars.

*If the previous day's consolidated closing price of a Network B Eligible Security exceeded $75 and the security is not a Portfolio Depository Receipt, Index Fund Share, or Trust Issued Receipt, or does not underlie an individual stock option contract listed and currently trading on a national securities exchange, the ''applicable price range'' is two dollars.

(2) Subsequent Notifications—If, after sending a pre-opening notification, the situation in a *Market Maker's* [specialist's] market changes, he *or she* may have to issue, *via the facilities of the Corporation,* a subsequent pre-opening notification. The three situations requiring subsequent pre-opening notifications are described below. Subsequent pre-opening notifications shall be standardized pre-opening administrative messages. After sending a subsequent notification, the *Market Maker* [specialist] shall wait either (A) one minute or (B) until the balance of the original three-minute waiting period expires whichever is longer, before opening his *or her* market (*i.e.,* if more than one minute of the initial waiting period has not yet expired at the time the subsequent notification is sent, the *Market Maker* [specialist] must wait for the rest of the period to pass before opening his *or her* market).

(I) Increase or Decrease in Applicable Price Range—Where, prior to the *Market Maker's* [specialist's] opening of his *or her* market in the security, his *or her* anticipated opening price shifts so that it (1) is outside of the price range specified in his *or her* pre-opening notification but (2) still represents a change from the previous day's consolidated closing price of more than the applicable price change, he *or she* shall issue, *via the facilities of the Corporation,* a replacement preopening notification (an ''additional'' notification) through the System before opening his *or her* market in the security. An additional notification contains the same kind of information as is required in an original preopening notification.

*(II)* [II.] Shift to Within Applicable Price Change Parameter—

(a) The *Market Maker* [specialist] shall, by issuing, *via the facilities of the Corporation,* a ''cancellation'' notification through the System, notify the Participant market(s) of the receiving market maker(s) prior to opening the security if the price at which he *or she* anticipates opening his *or her* market shifts so that it (1) is outside of the price range specified in his *or her* pre-opening notification but (2) does not represent a change from the previous day's consolidated closing price of more than the applicable price change.

(b) Notwithstanding the preceding sentence, in situations where the price range in an initial or additional notification includes price variations equal to or less than the applicable price change parameters, the ''cancellation'' notification signifies that the anticipated opening price: (1) may or may not be outside of the price range specified in the pre-opening notification and (2) does not represent a change from the previous day's consolidated closing price of more than the applicable price change.***

(III) Participation as Principal Precluded (''Second Look'')—If a responding market maker who has shown in his *or her* pre-opening response interest as principal at a price better than the anticipated opening price would be precluded from participation as principal in the opening transaction (*e.g.,* his *or her* responding principal interest is to sell at a price ⅛ or more below the opening price established by paired agency orders), the *Market Maker* [specialist] shall send, *via the facilities of the Corporation,* a ''second look'' notification through the System notifying such responding market maker of the price and size at which he *or she* could participate as principal (*i.e.,* in the parenthetical example above, the total amount of the security that he *or she* would have to sell at the ⅛ better price to permit the opening transaction to occur at that price).

*(ii)*[(B)] Tape Indications—If the CTA Plan or the Corporation's *Rules* [rules] require or permit that an ''indication of interest'' (i.e., an anticipated opening price range) in a security be furnished to the consolidated last sale reporting system prior to the opening of trading, or reopening of trading following a halt or suspension in trading in one or more Eligible Listed Securities, then the furnishing of an indication of interest, in such situations shall, without any other additional action required of the *Market Maker* [specialist], (1) initiate the Pre-Opening process, and, (2) if applicable, substitute for and satisfy the requirements of paragraphs *(8)(A)(i)(1), (8)(A)(i)(2)(I) and (8)(A)(i)(2)(II)* [(8)(i)(A)(1), (8)(i)(A)(2)(I) and (8)(i)(A)(2)(II)]. (While the furnishing of an indication of interest to the consolidated last sale reporting system satisfies the notification requirements of this *Rule* [rule], *a Market Maker* [a specialist] should also transmit, *via the facilities of the Corporation,* the indication through the System in the format of a standardized pre-opening administrative message.) In any such situation the *Market Maker* [specialist] shall not open or reopen the security until not less than three minutes after *the* [his] transmission of the opening or reopening indication of interest. For the purpose of paragraphs *(8)(B)(i), (8)(B)(iii), (8)(A)(i)(2)(III), (8)(B)(iv), (8)(B)(v), (8)(C) and (8)(A)(ii)* [8(ii)(A), 8(ii)(C), 8(i)(A)(2)(III), 8(i)(D), 8(ii)(E), 8(iii) and 8(i)(B)] ''pre-opening

*** Example: CTA close at 30. Pre-Opening Notification sent with any one of the following price ranges 30—½; 30⅛—⅝; or 30¼—¾. It is then determined that the stock will open at 29¾ or ⅞. Under paragraph (II)(a), the *Market Maker* [specialist] ''shall'' send, *via the facilities of the Corporation,* cancellation notification. If it is subsequently determined that stock will open at 30, 30⅛, or 30¼, the *Market Maker* [specialist] need not reindicate stock, *via the facilities of the Corporation,* pursuant to paragraph (II)(b).

notification'' includes an indication of interest furnished to the consolidated last sale reporting service.

*(B)*[(ii)] Pre-Opening Responses

*(i)* [Decision on Opening Transaction—Subject to paragraph *8(B)(ii)* [(8)(ii)(B)]. If a *Market Maker* [specialist] who has issued*, via the facilities of the Corporation,* a pre-opening notification receives*, via the facilities of the Corporation,* ''pre-opening responses'' through the System containing ''obligation to trade'' from market makers in other Participant markets (''responding market makers''), he *or she* shall combine those obligations with orders he *or she* already holds in the security and, on the basis of this aggregated information, decide upon the opening transaction in the security. If the *Market Maker* [specialist] has received*, via the facilities of the Corporation,* more than one-pre-opening response from a Participant market, he *or she* shall include in such combination only those obligations to trade from such Participant market as are specified in the most recent response whether or not the most recent response expressly cancels the preceding response(s). An original or revised response*, via the facilities,* received after the *Market Maker* [specialist] has affected his *or her* opening transaction shall be to no effect.

*(ii)*[(B)] Pre-Opening Responses from Open Markets—A *Market Maker, via the facilities of the Corporation,* [specialist] must accept only those pre-opening responses sent to the Corporation by market makers in other Participant markets prior to the opening of the[ir] market[s] for trading in the security.[1] Following a halt or suspension in trading on the Corporation, a *Market Maker, via the facilities of the Corporation,* [specialist] must accept only those pre-opening responses sent by market makers to the Corporation from other Participant markets that halted trading in the security contemporaneously with the Corporation and that had not resumed trading in the security at the time the pre-opening response is sent.

In the event that one or more market makers from Participant markets that have already opened trading in a security or, with respect to a halt or suspension in trading, either did not halt trading in a security contemporaneously with the Corporation, or has already resumed trading in a security, respond to a pre-opening notification in that security, the *Market Maker* [specialist] need not, but may in his *or her* discretion, accept*, via the facilities of the Corporation,* such responses for the purpose of inclusion in the opening or reopening transaction. In the event that a Participant market opens or with respect to a halt or suspension in trading, resumes trading in a security subsequent to a market maker in that Participant market sending a pre-opening response but prior to the opening or reopening transaction on the Corporation, the market maker who sent the pre-opening response to the Corporation must confirm the pre-opening response by sending an administrative message through the System stating that the response remains valid: if the market maker fails to so confirm the pre-opening response, the *Market Maker* [specialist] need not, but may in his *or her* discretion, accept*, via the facilities of the Corporation,* the original response for the purpose of inclusion in the opening or reopening transaction.

*(iii)*[(C)] Allocation of Imbalances—Whenever pre-opening responses from one or more responding market makers include obligations to take or supply as principal more than 50 percent of the opening imbalance, the *Market Maker* [specialist] may take or supply as principal 50 percent of the imbalance at the opening price, rounded up or down as may be necessary to avoid the allocation of odd lots. In any such case, where the pre-opening response is from more than one responding market maker, the *Market Maker* [specialist] shall allocate the remaining imbalance (which may be greater than 50 percent if the *Market Maker* [specialist] elects to take or supply less than 50 percent of the imbalance) among them in proportion to the amount each obligated himself *or herself* to take or supply as principal at the opening price in his *or her* pre-opening response, rounded up or down as may be necessary to avoid the allocation of odd lots. For the purpose of this paragraph *8(B)(iii)* [(8)(ii)(C)], multiple responding market makers in the same Eligible Listed Security in the same Participant market shall be deemed to be a single responding market maker.

*(iv)*[(D)] Treatment of Obligations to Trade—In receiving a pre-opening response *via the facilities of the Corporation,* a *Market Maker* [specialist]*, via the facilities of the Corporation,* shall accord to any obligation to trade as agent included in the response the same treatment as he *or she* would to an order entrusted to him *or her* as agent on the *Corporation* [Exchange] at the same time such obligation was received.

*(v)*[(E)] Responses Increasing the Imbalance—A *Market Maker* [specialist] shall not reject*, via the facilities of the Corporation,* a pre-opening response that has the effect of further increasing the existing imbalance for that reason alone.

*(C)*[(iii)] Reports of Participation—Promptly following the opening in any security as to which a *Market Maker, via the facilities of the Corporation,* [an Exchange specialist] issued pre-opening notification, the *Market Maker, via the facilities of the Corporation,* [specialist] shall report to each Participant responsible for a market in which one or more responding market makers are located (A) the amount of the security purchased and/or sold, if any, by the responding market maker(s) in the opening transaction and the price thereof or (B) if the responding market maker's response(s) included agency or principal interest at the opening price that did not participate in the opening transaction, the fact that such interest did not so participate.

(9) Opening in Other Participating Markets

*(A)*[(i)] Pre-Opening Responses—Subject to paragraph *(9)(B)* [(9)(ii)], whenever a *Market Maker, via the facilities of the Corporation,* [specialist] who has received a pre-opening notification as provided in the ITS Plan in any Eligible Listed Security as to which he *or she* is registered as a *Market Maker* [specialist] wishes to participate in the opening of that security in the Participant market from which the pre-opening notification was issued, he *or she* may do so by sending*, via the facilities of the Corporation,* obligations to trade through the System to such Participant market in a pre-opening response. A pre-opening response shall:

*(i)*[(A)] be designated as a pre-opening response (''RES'')

*(ii)*[(B)] Identify the Participant market P, the *Market Maker* [specialist] and the security (''XYZ''), and

*(iii)* [(C)] Show the *Market Maker's* [specialist's] interest (if any), both as principal for his *or her* own account (''P'') and as agent for orders left with him *or her* (''A''), at each price level within the price-range indicated in the pre-opening notification (e.g., 40⅜, reflected on a netted share basis by being formatted as a standardized pre-opening administrative message as follow: RES/P/XYZ BUY A—P 40⅜

The response may also show market orders separately.

*(B)*[(ii)] Response When the Corporation is Open—Notwithstanding paragraph *(9)(A)* [(9)(i)], a *Market Maker* [specialist] who has received *via the facilities of the Corporation,* a pre-opening notification in any Eligible Listed Security in which he *or she* is registered as a *Market Maker* [specialist] should not send*, via the facilities of the Corporation,* a pre-opening response to the originator of such notification if *(i)* [(A)] the market for trading in the security is open on the Corporation or *(ii)* [(B)] the Participant market from which the notification emanated had declared a halt or suspension in trading in such security, and the Corporation either had not halted trading in the security reasonably contemporaneously with the Participant Market or had resumed trading during the halt or suspension in trading.

*(C)* [(iii)] Revised Responses—a *Market Maker* [specialist] may cancel or modify his *or her* pre-opening response by sending through the System, *via the facilities of the Corporation,* a revised response that cancels the obligations to trade contained in this original responses and, if a modification is desired, that substitutes new obligations to trade stating the *Market Maker's* [specialist's] aggregate interest (*i.e.*, his *or her* interest reflected in the original response plus any additional interest and/or minus any withdrawn interest) at each price level. Each succeeding response, even if it fails to expressly cancel its predecessor response, shall supersede the predecessor response in its entirety. Any revised response shall be to no effect if received in the Participant market from which the pre-opening notification was issued after the security has opened in such Participant market.

*(D)*[iv] Sole Means of Pre-Opening Routing—Once a pre-opening notification as to any security is received *through the facilities of* [on] the Corporation, the one or more *Market Makers* [specialists] in such security shall submit*, via the facilities of the*

[1] For purposes of this section, the market in a security is opened (or reopened) with either a trade or a quotation, if trades are being reported to the Consolidated Tape and quotes are being disseminated on the Consolidated Quotation System.

*Corporation,* any obligations to trade that security as principal for his*, her* or their own accounts to the Participant market from which the pre-opening notification was issued only through the Pre-Opening Application and shall not send orders to trade that security for his, *her* or their own accounts to such Participant market for participation at the opening in that market by any other means. The foregoing sentence shall have no application to orders sent to that market by the *Market Makers, via the facilities of the Corporation,* [specialists(s)] prior to the issuance of a pre-opening notification.

*(E)* Use of System before Opening or Reopening—No ETP Holder[, Equity ASAP Holder or ETP Firm] where acting as principal or agent, shall send*, via the facilities of the Corporation,* an obligation to trade, commitment to trade or order in any security in the Participant market (or prior to the resumption of trading in the security in the Participant market following the initiation of a halt or suspension in trading in the security until a pre-opening notification in the security has been issued from the other Participant market, or, if no pre-opening notification is required, until the market in the security has opened in such other Participant market.

*(F)*[(iv)] Duration of Obligations to Trade—Responses to pre-opening notifications shall be voluntary, but each obligation to trade that at a *Market Maker* [specialist] includes*, via the facilities of the Corporation,* in any pre-opening response, or in any modification of a pre-opening reponse, shall remain binding on him *or her,* and on any person for whom he *or she* is acting, until the security has opened in the Participant market from which the pre-opening notification was issued or until a cancellation or modification of such obligation has been received in such *Participant* [participant] market, and any such modification shall itself be binding on the *Market Maker* [specialist] or such person until a subsequent cancellation or modification thereof has been received in such Participant market. The preceding sentence applies to obligations to trade even if included in pre-opening responses contravening paragraph *(8)(B)* [(8)(ii)].

Commentary

01. No ETP Holder[, Equity ASAP Holder or ETP Firm] shall buy against a commitment to sell designated as ''short'' which is received *through* [on] the facilities of the Corporation if the resulting transaction would violate the short selling rules.

02. Any purchase or sale against a commitment to trade received *through* [on] the facilities of the Corporation shall be effected in accordance with the *Rules* [rules] applicable to the making of bids, offers and transactions on the *facilities of the Corporation* [facility].

03. For the purposes of this *Rule* [rule], the market in a security is opened (or reopened) with either a trade or quotation, if trades are being reported to the Consolidated Tape and quotes are being disseminated to the Consolidated Quotation System.

[.04—Deleted.]

ITS ''Trade-Throughs'' and ''Locked Markets''

Rule *7.56* [7.67](a). Definitions.

(1) A*n* ''*Exchange* trade-through,'' as that term is used in this Rule, occurs whenever an ETP Holder [or ETP Firm] initiates the purchase of an Eligible Listed Security *through the facilities of* [on] the Corporation at a price which is higher than the price at which the security is being offered (or initiates the sale of such a security *through the facilities of* [on] the Corporation at a price which is lower than the price at which the security is being bid for) at the time of the purchase (or sale) in another ITS participating market center as reflected by the bid (offer) then being displayed [on the Floor] from such other market center. The ETP Holder [or ETP Firm] described in the foregoing sentence is referred to in this Rule as the ETP Holder [or ETP Firm ] who initiated a trade-through.

(2)—No change.

(3) A ''third participating market center trade-through,'' as that term is used in this Rule, occurs whenever an ETP Holder [or ETP Firm on the Corporation] initiates the purchase of an Eligible Listed Security by sending a commitment*, via the facilities of the Corporation,* to trade through the System and such commitment results in an execution at a price which is higher than the price at which the security is being offered (or initiates the sale of such a security by sending, *via the facilities of the Corporation,* a commitment to trade through the System and such commitment results in an execution at a price which is lower than the price at which the security is being bid for) at the time of purchase (or sale) in another ITS participating market center, as reflected by the offer (bid) then being displayed through the facilities of the Corporation. The *ETP Holder* [member] described in the foregoing sentence is referred to in this Rule as the ''ETP Holder [or ETP Firm] who initiated a third participating market center trade-through.''

(4) A ''trade-through,'' as that term is used in this Rule, means either a*n Exchange* trade-through [on the facilities of the Corporation] or a third participating market center trade-through.

(b) Trade Throughs.

When purchasing or selling, either as principal or agent, any Eligible Listed Security *through the facilities of* [on] the Corporation or by issuing, via the facilities of the Corporation, a commitment to trade through the System, ETP Holders[, Equity ASAP Holder or ETP Firms] should avoid initiated a trade-through unless the provisions of paragraphs (b)(3) below are applicable.

(2)(A) Except as provided in paragraph (b)(3) below, if a trade-through occurs and a complaint thereof is received by the Corporation through the System from the party whose bid or offer was traded-through (''the aggrieved party'', then:

(i) In the case of a*n Exchange* trade-through [on through the facilities of the Corporation] only, if the ETP Holder[or ETP Firm] who initiated the trade-through and the party on the contra side of the transaction each initiated the transaction [while on] through the facilities of the Corporation for his or *or her* own account or any account in which he *or she* has an interest, the transaction shall be deemed void and a cancellation therefore shall be reported through the consolidated last sale reporting system;

(ii) Except as provided in paragraph (b)(2)(A)(i) above, (a) the ETP Holder [or ETP Firm] who initiated the trade-through shall satisfy, or cause to be satisfied the bid or offer traded-through in its entirely either at the price of such bid or offer, or, at the price that caused the trade-through (as determined in accordance with paragraph (b)(2)(B) below) or, (b) if he *or she* elects not to do so (and, in the case of an third participating market center trade-through he *or she* obtains the agreement of the contra party within the ITS participating market center that received the commitment that caused that trade-through), then the price of the transaction which constituted the trade-through shall be corrected to a price at which a trade-through would not have occurred and the price correction shall be reported through the consolidated last sale reporting system.

(B) The price at which the bid or offer traded-through shall be satisfied pursuant to clause (a) of paragraph (b)(2)(A)(ii) shall be the price of such bid or offer except if:

(i) the transaction that constituted the trade-through was of ''block size'' but did not constitute a ''block trade'' (as those terms are defined in Rule *7.57* [7.68]); and

(ii) the ETP Holder [or ETP Firm] who initiated the trade-through did not make every reasonable effort to satisfy or cause to be satisfied, through the System, the bid or offer traded-through at its price and in its entirety within two (2) minutes from the time the report of this transaction that constituted the trade-through was disseminated over the high speed line of the consolidated last sale report system. In the case of such exception, the price at which the bid or offer traded-through shall be satisfied shall be the price that caused the trade-through.

Whenever paragraph (b)(2)(A)(ii) applies, if the ETP Holder [or ETP Firm] who initiated the trade-through, or the party (or the broker/dealer within another ITS participating market center) on the contra side of the transaction was, of if both such parties were executing (in whole or in part) orders that originated from off *the facilities of the Corporation or off the Floor of the other* [their] respective *market centers* [Floor], each such order to portion thereof that was executed in the transaction that constituted the trade-through (whether such order or portion thereof was executed by the party who initiated the trade-through or by the member or a broker/dealer within another ITS participating market center on the contra side of the transaction) shall receive the price that caused the trade-through or the price at which the bid or offer traded-through was satisfied, if it was satisfied, pursuant to clause (a) of paragraph (b)(2)(A)(ii) or the adjusted price, if there was an adjustment, pursuant to clause (b) of paragraph (b)(2)(A)(ii), whichever price is most beneficial to the order or portion. Resulting money differences shall be the liability of the party who initiated the trade through.

(3) The provisions of paragraph (b)(2) above shall not apply under the following conditions:

(A)–(C)—No change.

(D) the trade-through occurred during a period when, with respect to the Eligible Listed Security which was the subject of the trade-through, ETP Holders [and ETP Firms of the Corporation] were relieved of their obligations under paragraph (c)(2) of Rule 11 Ac1–1 pursuant to the ''unusual market'' exception of paragraph (b)(3) of Rule 11Ac1–1; provided, however, that, unless the provisions of this paragraph (b)(3) (other than those of this proviso) apply, during any such period ETP Holders [and ETP Firms] shall make every reasonable effort to avoid trading-through any bid or offer displayed on the Floor from another ITS participating market center whose members are not relieved of their obligations under said paragraph (c)(2) with respect to such bid or offer;

(E)–(G)—No change.

(c) Complaints and Responses to Complaints.

(1) When a trade-through complaint is received by the Corporation, it shall be the duty of the ETP Holder [or ETP Firm] who initiated the trade-through to respond as promptly as practicable to the aggrieved party. Such a response shall notify the aggrieved party either:

(A)–(B)—No change.

(2)—No change.

(A)—No change.

(B) the loss proximately caused by the trade-through that would have been suffered by the aggrieved party had he *or she* purchased or sold the security subject to the trade-through so as to mitigate his *or her* loss and had such purchase or sale been effected at the ''loss basis price.''

For purposes of this paragraph, the ''loss basis price'' shall be the price of the next transaction, as reported by the high speed line of the consolidated last sale reporting system, in the security in question, after one hour has lapsed from the time the complaint is received by the Corporation (or, if the complaint is so received within the last hour of trading on the Corporation on any day, then the price of the opening transaction in such security being displayed through the facilities of [on] the Corporation on the next day on which the Corporation trades that security).

(3) Any ETP Holder [or ETP Firm] who is an aggrieved party may at any time, at his *or her* discretion, take steps to establish and mitigate any loss he *or she* might incur as a result of the trade-through. He *or she* shall give prompt notice to the other *market* [exchange] center of any such action.

(4) If a complaint of a purported trade-through is received by the Corporation and the complained-of transaction resulted from an ETP Holder's [or ETP Firm's] execution [on] through the facilities of the Corporation of a commitment to trade received from another ITS participating market center, the ETP Holder [or ETP Firm] should, if circumstances permit, make reasonable efforts to notify the complaining party as promptly as practicable following receipt of the complaint, (A) that the transaction was not initiated [on] through the facilities of the Corporation and (B) of the identity of the ITS participating market center that originated the commitment. Neither compliance nor non-compliance with the preceding sentence shall be the basis for any liability of the ETP Holder [or ETP Firm] for any loss associated with the complained-of transaction.

(5) If a transaction that resulted from *the* [an] ETP Holder's [or ETP Firm's] execution [on] through the facilities of the Corporation of a commitment to trade constitutes a trade-through under the rules of the originating ITS participating market center, then:

(A) if the broker/dealer on such market center who initiated the transaction requests that the ETP Holder [or ETP Firm] correct the price of such transaction in accordance with the counterpart in such market center's trade-through rule to paragraph (b)(2)(A)(ii)(b) of this Rule, the ETP Holder [or ETP Firm] may, but need not, acquiesce and so correct the price; and

(B) paragraph (b)(2)(C) of this *Rule* [rule] shall apply as if the ETP Holder [or ETP Firm] were a contra party within the meaning of that paragraph.

(d) *Locked Markets.*

(1) Except as provided in paragraph (d)(2) below, an ETP Holder [or ETP Firm] who makes a bid for an Eligible Listed Security [on] through the facilities of the Corporation and, in so doing, causes a locked market with another ITS participating market center, and the Corporation receives a complaint through the *System* [system] from the market center whose offer was locked, the ETP Holder [or ETP Firm] responsible for the locking shall, as specified in the complaint, either promptly (A) send, *via the facilities of the Corporation,* a commitment to trade to such other market center seeking the offer he *or she* has equaled or exceeded, which commitment shall be for either the number of shares he *or she* has bid for or the number of shares offered on the other market center, whichever is less; or (B) ''unlock'' (i.e., adjust his *or her* locking bid so as not to cause a locked market). If the complaint specifies ''unlock'', he *or she* may nevertheless ship instead. The same principle shall apply to an ETP Holder [or ETP Firm] who makes an offer for an Eligible Listed Security *through the facilities of* [on] the Corporation and causes a locked market with another ITS participating market center.

(2) The provisions of paragraph (d)(1) above shall not apply when:

(A)—No change.

(B) the ETP Holder [for ETP Firm] who caused a locked market makes every reasonable effort to comply with paragraph (d)(1) above, but is unable to comply because of a system/equipment failure or malfunction;

(C)—No change.

(D) the locked market occurred at a time when, with respect to the Eligible Listed Security which was the subject of the locked market, ETP Holders [or ETP Firms either] on [through the facilities of] the Corporation or *members* in the ITS participating market center in which the aggrieved member is located were relieved of their obligations under paragraph (c)(2) of Rule 11Ac1–1 pursuant to the ''unusual market'' exception of paragraph (b)(3) of Rule 11Ac1–1; or

(E)—No change.

(F) the locking bid or offer no longer prevails [on the Floor] at the time the complaint is received [on the Floor]. This exemption is not intended to discourage a locking member from electing to send a commitment if the complaint requests him *or her* to do so.

Commentary

.01 The provisions of this Rule shall not apply to (1) purchases and sales effected by members participating in the opening (or reopening) transaction in an Eligible Listed Security, or (2) any ''block trade'' as defined in Rule *7.57* [7.68].

[.02—Deleted.]

*.02* [.03] A *Market Maker* [Specialist] utilizing an automatic quotation system for quotation changes cannot quote a size greater than one round lot bid and offer.

*.03* [.04]—No change.

Block Trade Policy

Rule *7.57*[7.68](a). Definitions.

(1) A ''block trade,'' as that term is used in this Rule, means a trade *executed* [on] through the facilities of the Corporation that:

(A)–(B)—No change.

(C) involves either:

(i) a cross of block size (where the *ETP Holder* [member] represents all of one side of the transaction and all or a portion of the other side); or

(ii) any other transaction of block size (i.e., in which the ETP Holder [or ETP Firm] represents an order of block size on one side of the transaction only) that is not the result of an execution at the current bid or offer on the Corporation.

Contemporaneous transactions at the same price filling an order or orders then or theretofore represented *through the facilities of* [on] the Corporation by an ETP Holder [or ETP Firm] (including transactions resulting from commitments to trade sent*, via the facilities of the Corporation,* by the ETP Holder [or ETP Firm] pursuant to paragraph (b) below) shall be deemed to constitute a single transaction for the purpose of this definition.

(2) A ''current bid or offer on the Corporation,'' as that term is used in paragraph (a)(1)(c)(ii) above, means the price of the current quotation on the facilities of the Corporation established independently of the order to buy or sell that is represented by the ETP Holder [or ETP Firm].

(3) A ''bid or offer displayed from another ITS participating market center'' (or any derivative phrase), as that term is used in this Rule, means the current quotation from another ITS participating market center displayed *through the facilities* [on the Floor] of the Corporation as required by the ITS Plan, and does not include ''away-from-the-market'' limit orders or other interests that may be represented in such other ITS participating market center.

(b) Obligation to Send Commitments. Unless one or more of the conditions described in paragraph (c) below exist, *the* ETP Holder [or ETP Firm] representing the block-size order(s) shall at the time of execution of a block trade send, or cause to be sent, *via the facilities of the Corporation,* through ITS to each other ITS participating

market center displaying a bid (offer) superior to the execution price, a commitment to trade at the execution price and for the number of shares displayed with that market center's better-priced bid (offer).

(c) Inapplicability. Paragraph (b) above shall not apply under the following conditions:

(1)—No change.

(2) the ETP Holder [or ETP Firm] representing the block-size order(s) made every reasonable effort to satisfy through ITS a better-priced bid or offer displayed by another ITS participating market center but was unable to because of a systems/equipment failure or malfunction;

(3)—No change.

(4) the block was executed during a period when, with respect to the Eligible Listed Security that was the subject of the block trade, ETP Holders [on of the Corporation] were relieved of their obligations under paragraph (c)(2) of Rule 11Ac1–1 pursuant to the ''unusual market'' exception of paragraph (b)(3) of Rule 11Ac1–1; provided, however, that, unless one of the conditions of this paragraph (c) (other than that of this subparagraph (4)) applies, *an* ETP Holder [or ETP Firms] shall nevertheless make every reasonable effort during any such period to satisfy through ITS*, via the facilities of the Corporation,* any better-priced bid or offer displayed *through the facilities of* [on] the Corporation from another ITS participating market center whose members are not so relieved of their obligations with respect to such bid or offer under paragraph (c)(2) of Rule 11Ac1–1;

(5)—No change.

(6) the better-priced bid or offer had caused a ''locked marked,'' as that term is defined in Rule *7.56*[7.67], in the Eligible Listed Security that was the subject of the block trade.

Commentary

.01 A transaction not subject to this Rule may be subject to the trade-through provisions of Rule *7.56*[7.67]. An ETP Holder or ETP Firm who makes a bid or offer *through the facilities of* [on] the Corporation otherwise than in connection with a block trade may be subject to the locked market provisions of Rule *7.56*[7.67].

[Rule 7.69—Deleted.]

Rule *7.58*[7.45]—No change.

*Rule 7.59. Reserved.*

**Section 6[8]. Contracts in Securities**

Definitions and General Provisions

Rule *7.60*[7.50]—No change.

Rule *7.61*[7.51](a). ETP [or Equity ASAP] Contracts. All contracts in the ordinary course of business of an ETP Holder[, Equity ASAP Holder, or ETP Firm of the Corporation] with any other ETP Holder[, Equity ASAP Holder, or ETP Firm of the Corporation] for the purchase, sale, borrowing, loaning or hypothecating of securities, or for the borrowing, loaning or payment of money, whether occurring *through the facilities* [upon the Floors] of the Corporation or elsewhere, are ETP [or Equity ASAP] contracts of the Corporation unless made subject to the *rules* [Rules] of another exchange.

(b) Provisions Included in ETP [or Equity ASAP] Contracts. All bids made and accepted, and all offers made and accepted in accordance with the Bylaws, Rules, and procedures of the Corporation shall be binding. The applicable provisions of the Bylaws, Rules, and procedures of the Corporation and all other regulations adopted pursuant thereto, shall be part of the terms and conditions of all ETP *contracts* [or Equity ASAP Contracts] and all contracts thereby effected, and shall be subject to said provisions and to the exercise by the Board of Directors of the Corporation of the powers in respect thereto vested in them.

(c) Extend or Postpone Time, Prescribe Special Terms. Notwithstanding the foregoing subparagraphs (a) and (b) of this Rule or any other provisions of the Bylaws or Rules of the Corporation to the contrary, the Board of Directors may extend or postpone the time or prescribe special terms and conditions for the performance or settlement of ETP *contracts* [or Equity ASAP Contracts] whenever such action is called for by the public interest or by just and equitable principles of trade.

Delivery of Securities

Rule *7.62* [7.53](a). Depository Eligibility.

(1)—No change.

(2) A security depository's inclusion of the CUSIP number identifying a security in its file of eligible issues does not render a security ''depository eligible'' within the meaning of Rule *7.60(a)(2)* [7.50(a)(2)] until:

(A)–(B)—No change.

(3)—No change.

(b) Book Entry Settlement of Transactions.

(1) An ETP Holder[, Equity ASAP Holder, ETP Firm] shall use the facilities of a securities depository for the book-entry settlement of all transactions in depository eligible securities with another financial intermediary or a member of a national securities exchange or a registered securities association.

(2) An ETP Holder[, Equity ASAP Holder, ETP Firm] shall not effect a delivery-versus-payment or receipt-versus-payment transaction in a depository eligible security with a customer unless the transaction is settled by book-entry using the facilities of a securities depository.

(3) This *Rule* [rule] shall not apply to transactions that are settled outside of the United States.

(4) The requirements of this *Rule* [rule] shall supersede any inconsistent requirements under the Bylaws and Rules of the Corporation.

(5) This *Rule* [rule] shall not apply to any transaction where the securities to be delivered in settlement of the transaction are not on deposit at a securities depository and

(A)–(B)—No change.

**Section 7. Special Offerings**

Approval

Rule *7.63E*[7.79](a). The Corporation may, subject to the following conditions and provisions, permit a ''Special Offering'' as defined hereinafter, to be made through the facilities of the Corporation, provided that the Corporation shall have determined that the regular market on the *facilities* [Floor] of the Corporation cannot, within a reasonable time and at a reasonable price or prices, absorb the particular block of stock which is to be the subject of such Special Offering. In making such determination the following factors may be taken into consideration:

(1) Price range and the volume of transactions in such stock on the *facilities* [Floor] of the Corporation during the preceding month;

(2) Attempts which have been made to dispose of the stock in the regular market on the *facilities* [Floor] of the Corporation;

(3) The existing condition of the *Arca Book* [specialist's book] with respect to such stock;

(4) The apparent past and current interest in such stock in such regular market on the *facilities of the Corporation* [Floor]; and

(5)—No change.

Except in special circumstances a ''Special Offering'' will not be permitted unless the offering involves at least 1,000 shares of stock or shares having an aggregate market value of $25,000, whichever is greater.

Definition—Price—Special Commission

(b) A Special Offering is defined as an offering (designated as a fixed price offering) by one or more ETP Holders[, Equity ASAP Holders, or ETP Firms] acting for his*, her* or their own account or for the account of one or more other persons, for the sale of a block of stock dealt in on the Corporation, through the facilities of the Corporation, at a price not in excess of the last sale of such stock or the current offer of such stock, in the regular market on the *facilities* [Floor] of the Corporation, whichever is the lower; but not lower than the current bid for such stock in such market, unless otherwise specifically permitted by the Corporation, whereby the offeror may agree to pay a special commission to such ETP Holders[, Equity ASAP Holders, or ETP Firms] as may accept all or any part of such Offering for the account of his*, her* or their customers.

(c) Conditions. No Special Offering, as provided by this *Rule* [rule], shall be made unless all of the following conditions are satisfied:

(1) Stabilizing. The person for whose account such Special offering is to be made shall at the time of such offering be the owner of the entire block of stock so to be offered, except that, for the purpose of stabilizing, there also may be sold for such person's account, or for the account of any ETP Holder[, Equity ASAP Holder or ETP Firm] offering the block of stock on his *or her* behalf as part of the Special Offering, an amount not to exceed 10% of the shares owned and originally offered in the Special Offering by such person.

(2) All to be Offered within Reasonable Time. The person for whose account such Special Offering is to be made shall include within the Offering all of the security which he *or her* then intends to offer within a reasonable time; and there shall be furnished to the Corporation before the Offering is made a written statement by the offeror to that effect, or a written statement by his *or her* broker stating that the broker has been so advised by the offeror.

(3)—No change.

(4) Agreement by Offeror. The person for whose account such Special Offering is made

shall agree that during the period such offering is open he *or her* will not offer in the regular market on the *facilities* [floor] of the Corporation any shares of the stock which is the subject of such Special Offering, unless the prior permission of the Corporation is first obtained.

(5) No Special Commission Member, Etc. No ETP Holder[, Equity ASAP Holder, or ETP Firm] shall directly or indirectly receive any pat of the special commission referred to in Section 1(b) in connection with any purchase for his*, her* or its own account or the account of any participant therein or for the account of any other ETP Holder[, Equity ASAP Holder, or ETP Firm] or any participant therein, made pursuant to a Special Offering, except that an ETP Holder[, Equity ASAP Holder, or ETP Firm] may accept and retain such special commission for his*, her* or its own account in respect of securities purchased as principal for the bona fide purpose of distribution, even though such firm has been unable to distribute the securities.

(6)–(7)—No change.,

(8) Allotments. The offeror may, at the time of the announcement of a Special Offering, allot on a firm basis to ETP Holder[, Equity ASAP Holder, or ETP Firms] engaged in the distributing business not more than 50% of the securities involved in the offering. When buying orders in a Special Offering exceed the amount of the offering, the remainder of the offered securities will be allocated in reasonably proportionate amounts.

(d)—No change.

(e) Information on Tape. The terms of a Special Offering shall be printed on the tape before it is effective, with statement, if such be the fact, that stabilizing transaction have been effected or are contemplated and that it is intended to over allot shares as permitted by Rule *7.63(c)(1)* [7.79(c)(1)]. Transactions effected pursuant to a Special Offering shall when feasible be printed currently on the tape, and the tape shall show the gross price and the special commission in a legend such as ''SPOFF 100 XYZ 40 COM .50 or ½,'' as well as the number of orders involved in such transaction where more than one order is involved; and after the close of the market, any unprinted remainder of such transactions executed during the day shall be so printed. When the offering is terminated, an announcement to that effect shall be printed on the tape; and when the intention to stabilize is terminated, such fact shall be announced on the tape together with a statement that stabilizing transactions have been effected, if such be the fact.

(f)–(g)—No change.

(h)(1) Confirmations. An ETP Holder[, Equity ASAP Holder, or ETP Firm] effecting for the account of a customer, a purchase pursuant to a Special Offering, shall confirm such transaction to such customer at the offering price and shall not charge to or collect from such customer any commission on account of such transaction.

The confirmation by an ETP Holder[, Equity ASAP Holder, or ETP Firm] to a buyer or seller in a Special Offering shall state in full the terms and conditions of the Special Offering. The confirmation to a buyer shall state at least:

(A)–(B)—No change.

(C) That the seller is to pay a special commission to the ETP Holder[, Equity ASAP Holder, or ETP Firm], if such be the fact;

(D)–(E)—No change.

(F) The nature of the ETP Holder[, Equity ASAP Holder, or ETP Firm] interest in the special offering, if any, other than its interest as a recipient of the special commission.

(2) Soliciting Orders. An ETP Holder[, Equity ASAP Holder, or ETP Firm] soliciting purchase orders for execution pursuant to a Special Offering shall advise the person so solicited of the terms and conditions of such Offering before effecting any transaction for such person pursuant thereto. Such disclosure shall include at least the items described in paragraphs *(A) to (F) of Rule 7.63(h)(1)* [(a) to (f) of Rule 7.79(h)(1)].

(3) More Advantageous Price. An ETP Holder[, Equity ASAP Holder, or ETP Firm]

(A)–(B)—No change.

(C) Proposing, pursuant to discretionary authority from a customer, to effect a purchase of stock which is the subject of a Special Offering then in effect, shall, before executing any such order or effecting any such purchase pursuant to such Special Offering make a bona fide attempt to execute such order or to effect such purchase in the regular market on the *facilities* [Floor] of the Corporation at a price more advantageous to the customer than the gross offering price under the Special Offering.

(i) Size of Offering. Rule *7.63(a)* [7.79(a)] places a general limitation on the size of Special Offerings, except in special circumstances. Such an exception might be a Special Offering of a stock designated as an ''inactive'' stock.

(j) Preliminary Information Required. The broker for the offeror will be required to furnish the following information to the Corporation, prior to the announcement of the Special Offering on the tape:

(1)–(7)—No change.

(8) Description of efforts to dispose of the security *through the facilities* [in the auction market on the Floor] of the Corporation.

(9) Written assurance of the offeror, or the broker upon advice from the offeror, that the shares contained in the Offering are all of the security which he *or she* then intends to offer within a reasonable time, as required in Rule *7.63(c)(2)* [7.79(c)(2)]

(10)–(11)—No change.

(12) Statement as to whether the offeror or his *or her* agent intends, for the purpose of stabilizing, to sell stock in the Special Offering in excess of that owned and included in the original offer as permitted to Rule *7.63(c)(1)* [7.79(c)(1)].

(13)—No change.

The foregoing information should be given to the Corporation as soon as possible in advance of the time it is proposed to make the Special Offering. Announcement will not be made on the tape of the Special Offering (and the Special Offering thus cannot become effective) until the Corporation has the requisite information and has approved it.

(k) Ownership. The offeror in a Special Offering must be the owner of the entire block of stock offered for sale, except for the purpose of stabilizing as permitted by Rule *7.63(c)(1)* [7.79(c)(1)].

(l)—No change.

(m) Other Offers. It should be noted that under Rule *7.63(c)(4)* [7.79(c)(4)], an offeror may not, while his *or her* Special Offering is open, offer any shares of the same stock in the regular *trading through the facilities* [auction market] without prior permission of the Corporation.

(n) Orders After Close. Orders accumulated after the close shall be completed on the *facilities* [Floor] of the Corporation at the opening of the next market session.

(o) Special Offering Transactions. [Purchases in Special Offerings shall be completed on the Floor of the Corporation at the Post or Posts where the stock is traded.] The handling of the order on either the purchase or the offering side may be entrusted to a *Market Maker* [Floor broker or specialist] in the same manner as in the case of regular orders. In connection with a special Offering, the broker for the buyer is acting in an agency capacity and the agency obligation to buy at the most advantageous price to the customer shall be observed.

(p)—No change.

(q) Odd Lot Stop Orders. Transactions effected pursuant to Special Offerings shall not elect Stop Orders or open odd lot orders for execution in the regular [auction] market.

(r) Confirmations. Confirmation need not be on a specially prepared form but must show clearly in type no smaller than 8-point that the purchase was part of a Special Offering; that no commission is to be charged to the customer; that the seller is to pay a special commission to the ETP Holder[, Equity ASAP Holder, or ETP Firm], if such be the fact; the amount of such special commission; the information printed on the tape regarding stabilizing transactions or the intention to stabilize; and the nature of ETP Holder's[, Equity ASAP Holder's, or ETP Firm's] interest in the Special Offering, if any, other than its interest as a recipient of the special commission.

Confirmations used by the broker for the seller similarly need not be on a specially prepared form, but must show clearly in type no smaller than 8-point that the sale is part of a Special Offering of * * * shares of * * * stock at * * * per share less * * * special commission, and, separately, the selling commission charged by the broker for the seller.

(s)—No change.

**Section *8* [12]. Exchange Distributions**

Rule *7.64* [7.80](a). Definition. An important feature of an Exchange Distribution is that an ETP Holder[, Equity ASAP Holder, or ETP Firm] may now pay compensation to its registered representatives for soliciting others to purchase *through the facilities* [in the regular auction market on the Floor] of the Corporation a security admitted to dealing which is the subject of an approved Exchange Distribution. Or it may on its own behalf or on behalf of a customer make an arrangement to pay a special commission, as mutually agreed, for distributing the security to one or more *ETP Holders* [members firms], who may in turn give special compensation to their registered representatives for purchases they have solicited in connection with the distribution.

Under an Exchange Distribution, purchase orders may be grouped from time to time, as they are received, and sent to the *facilities of the Corporation* [Floor] together with an order to sell an equal amount and ''crossed'' under the rules of the Corporation.

(b) Similar to Special Offering. An Exchange Distribution is somewhat similar to a Special Offering in the following respects:

(1)—No change.

(2) Approval will be given only when it is determined that the regular market on the *facilities* [Floor] could not, within a reasonable time and at a reasonable price or prices, otherwise absorb the block of securities;

(3)—No change.

(4) All transactions will take place on the facilities of the Corporation [(but unlike a Special Offering, will be done in the regular auction market)];

(5) Only ETP Holders[, Equity ASAP Holders, or ETP Firms] are eligible for participation in the solicitation of purchase orders and in the special commission, if any, paid by the offeror on purchases resulting from such solicitation;

(6) The person for whose account the distribution is to be made shall, at the time of the distribution, be the owner of the entire block of the security to be so distributed, and shall include within the distribution all of the security which he *or she* then intends to offer within a reasonable time;

(7) Each ETP Holder[, Equity ASAP Holder, or ETP Firm] soliciting purchase orders in connection with an Exchange Distribution must advise the person being solicited, before effecting any transaction for such person pursuant thereto, that the securities being offered are part of a specified number of shares being offered in an Exchange Distribution and that he *or she* is receiving a special commission from the seller or his *or her* broker, if that is the case.

(c) Differences from Special Offering. An Exchange Distribution differs from a Special Offering in that:

(1) It is effected in the regular [auction] market and not at a fixed price;

(2)–(3)—No change.

(4) During the period when the distribution is being made, neither the person for whose account the distribution is being made nor the ETP Holders, [Equity ASAP Holders, or ETP Firms] who are parties to the distribution, shall bid for or purchase any of the securities for an account in which the ETP Holder, [, Equity ASAP Holder, or the ETP Firm] has a direct or indirect interest;

(5) No ETP Holder[, Equity ASAP Holder, or ETP Firm] who is connected in any way with an Exchange Distribution may, with respect to such distribution, (A) effect stabilizing transactions, (B) effect short sales, (C) make firm allotments, (D) accept over-subscriptions.

(d) Procedure. To effect an ''Exchange Distribution'' of a block of a security admitted to dealing on the Corporation, an ETP Holder[, Equity ASAP Holder, or ETP Firm] for his*, her* or its own account, or the account of a customer, may

(1) Make an arrangement with one or more other ETP Holders[, Equity ASAP Holders, or ETP Firms] under which

(A) The ETP Holders[, Equity ASAP Holders, or ETP Firms], with whom the arrangement is made, solicit others to purchase such security;

(B) The selling ETP Holder[, Equity ASAP Holder, or ETP Firm] may pay to the ETP Holders[, Equity ASAP Holders, or ETP Firms], whom the arrangement is made, a special commission which is mutually agreeable; and

(C) ETP Holders[, Equity ASAP Holders, or ETP Firms], with whom the arrangement is made, may pay a special commission to their registered representatives; and/or

(2) Pay a special commission to his*, her* or its registered representatives for soliciting others to purchase such security.

(E) Approval Required. An ''Exchange Distribution'' may be made only with the prior approval of the Corporation. Such a Distribution shall not be approved unless the Corporation shall have determined that the regular market on the *facilities* [Floor] of the Corporation cannot, within a reasonable time and at a reasonable price or prices, otherwise absorb the block of securities which is to be the subject of the ''Exchange Distribution.'' In making such determination, the following factors may be taken into consideration:

(1) Price range and the volume of transactions in such security on the *facilities* [Floor] of the Corporation during the preceding month;

(2) Attempts which have been made to dispose of the security on the *facilities* [Floor] of the Corporation;

(3) The existing conditions of the *Arca Book* [specialist's book and Floor quotations] with respect to such security;

(4) The apparent past and current interest in such security on the *facilities* [Floor]; and

(5)—No change.

(f) Conditions. No ''Exchange Distribution'' shall be made unless all of the following conditions are satisfied:

(1)—No change.

(2) The person for whose account the Distribution is to be made shall include within the Distribution all of the security which he *or she* then intends to offer within a reasonable time; and there shall be furnished to the Corporation, before the Distribution is made, a written statement by the offeror to the effect or a written statement by his *or her* broker stating that the broker has been so advised by the offeror;

(3) The person for whose account the Distribution is made shall agree that during the period the Distribution is being made he *or she* will not bid for or purchase any of the security for any account in which he *or she* has a direct or indirect interest;

(4) The ETP Holders[, Equity ASAP Holders, or ETP Firms] who are parties to the arrangement for the Distribution shall not, during the period the Distribution is being made, bid for or purchase any of the security for an account in which they have a direct or indirect interest;

(5) No ETP Holder[, Equity ASAP Holder, or ETP Firm] shall be granted approval to effect an ''Exchange Distribution'' of a block of a security for an account in which he *or she* has a direct or indirect interest if he *or she* is registered as a *Market Maker* [specialist] in such security, unless the Corporation has determined that such *Market Maker* [specialist] has been unable, within a reasonable period of time, to dispose of the block of the security in the ordinary course of his *or her* dealings as a *Market Maker* [specialist]. Such approval shall stipulate that the *Market Maker* [specialist] may not deal directly with the public but must make an arrangement with one or more other ETP Holders[, Equity ASAP Holders, or ETP Firms] to solicit others to purchase the security, and pay, if any, a special commission to such other ETP Holders[, Equity ASAP Holders, or ETP Firm] as provided under Section 1(a) of this *Rule* [rule];

(6) Each ETP Holder[, Equity ASAP Holder, or ETP Firm] soliciting purchase orders for execution in the Distribution shall advise the person so solicited, before effecting any transaction for such person pursuant thereto, that the securities being offered are part of a specified number of shares or bonds being offered in an ''Exchange Distribution,'' and that he *or she* or it

(A) is acting for the seller and will receive a special commission from the seller or his *or her* broker if that is the case, or is acting as a principal; and

(B) is charging the buying customer a commission, if any, or is making the sale at a net amount, whichever the case may be.

(7) No ''short'' sale may be made in connection with the Distribution except that securities may be borrowed to make delivery where the person owns the securities sold and intends to deliver such securities as soon as possible without undue inconvenience or expense.

The conditions set forth in (2)(3) and (4) above shall not apply

(A) To transactions effected on the Corporation, for the purpose of maintaining a fair and orderly market, by *an ETP Holder* [a member] in a security in which he *or she* is registered as a *Market Maker* [specialist] and which is the subject of an Exchange Distribution for an account in which he *or she* has an interest, except that, when such Distribution is in effect, he *or she* shall not bid for or purchase such stock [on] through the facilities of the Corporation for an account in which he *or she* has an interest:

(i) at a price above the preceding sale, or

(ii) at a price above the next preceding sale, or

(B) To transactions effected by an ETP Holder[, Equity ASAP Holder or ETP Firm] on the Corporation in less than the unit of trading for the purpose of purchasing odd lots offered to him *or her* in a security in which he *or she* is registered as a *Market Maker* [specialist] and which is the subject of an Exchange Distribution in which he *or she* has an interest.

The conditions set forth in (3) and (4) above shall not apply to purchases necessitated solely in connection with ''crossing'' orders pursuant to the Distribution.

(g) Execution. In effecting an ''Exchange Distribution'' the orders for the purchase of the securities being distributed must be sent to the *facilities of the Corporation* [Floor] together with an order to sell an equal amount to be ''crossed'' in accordance with

the *Rules* [rules] applicable to the crossing of orders on the *facilities* [Floor], and such transactions shall be printed on the ticker tape.

(h) Reports. The ETP Holder[, Equity ASAP Holder, or ETP Firm] selling securities in an ''Exchange Distribution'' shall report to the Corporation all transactions in such securities effected by him, *her* or it for any account in which the seller had a director indirect interest, commencing with the time arrangements for the Distribution were made and ending with the time the Distribution was completed.

**Rule 8**

**Trading of Certain Equity Derivatives**

**Section 1. Currency and Index Warrants**

Rule 8.1–8.3—No change.

Account Approval

Rule 8.4. No ETP Holder[, Equity ASAP Holder, or ETP Firm] shall accept and order from a customer to purchase or sell a stock index, currency index or currency warrant unless the customer's account has been approved for options trading pursuant to Rule 9.18(b).

Rule 8.5—No change.

Discretionary Accounts

Rule 8.6. Rule 9.6(a) shall not apply to customer accounts insofar as an ETP Holder[, Equity ASAP Holder, or ETP Firm] exercises discretion to trade in stock index, currency index and currency warrants, and any such account shall instead be subject to the provisions of Rule 9.18(e) with respect to such trading. For purposes of this Rule, the term ''option'' as used in Rule 9.18(e) shall be deemed to include such warrants.

Supervision of Accounts

Rule 8.7. Rule 9.18(d) shall not apply to all customer accounts of an ETP Holder[, Equity ASAP Holder, or ETP Firm] in which transactions in stock index, currency index or currency warrants are effected. The term ''option'' as used in Rule 9.18(d) shall be deemed to include such warrants.

Customer Complaints

Rule 8.8 Rule 9.18(1) shall apply to all customer complaints received by an ETP Holder[, Equity ASAP Holder or ETP Firm] regarding stock index, currency index or currency warrants. The term ''options'' as used in Rule 9.18(1) shall be deemed to include such warrants.

Prior Approval of Certain Communications to Customers

Rule 8.9(a) No ETP Holder[, Equity ASAP Holder, or ETP Firm] or person associated with an ETP Holder[, Equity ASAP Holder, or ETP Firm] shall utilize any advertisement, educational material, sales literature or other communication to any customer or member of the public concerning stock index, currency index or currency warrants that:

(1)–(3)—No change.

(b) All advertisements, sales literature and educational material issued by an ETP Holder[, Equity ASAP Holder or ETP Firm] to any customer or member of the public pertaining to stock index, currency index or currency warrants shall comply with the requirements set forth in the Commentaries to Rule 9.28. For purposes or this Rule, the term ''option'' as used in such Commentaries shall be deemed to include such warrants, and the term ''The Options Clearing Corporation'' as used in such Commentaries shall be deemed to mean the issuer(s) of such warrants.

(c) All advertisements, sales literature (except completed worksheets) and educational materials issued by an ETP Holder[, Equity ASAP Holder or ETP Firm] to any customer or member of the public pertaining to stock index, currency index or currency warrants shall be approved in advance by a Compliance Registered Options Principal or designee thereof. Copies of such advertisements, literature or materials, together with the names of the persons who prepared them, the names of the persons who approved them and, in the case of sales literature, the source of any recommendations contained therein, shall be retained by the ETP Holder[, Equity ASAP Holder or ETP Firm] and be kept in an easily accessible place for examination by the Corporation for a period of three years.

(d) In addition to the approval required by subsection (c) of this Rule, every advertisement and all educational material of an ETP Holder[, Equity ASAP Holder or ETP Firm] pertaining to stock index, currency index and currency warrants shall be submitted to the Corporation at least ten days prior to use (or such shorter time as the Corporation may allow in particular instances) for approval and, if changed or expressly disapproved by the Corporation, shall be withheld from circulation until any changes specified by the Corporation have been made or, in the event of disapproval, until such material has been resubmitted for, and has received, Corporation approval. The requirements of this paragraph shall not be applicable to:

(1)—No change.

(2) advertisements in which the only reference to stock index, currency index or currency warrants is contained in a listing of services of an ETP Holder[, Equity ASAP Holder or ETP Firm].

(e)—No change.

Position Limits

Rule 8.10(a). Except with prior written approval of the Corporation in each instance, no ETP Holder[, Equity ASAP Holder, or ETP Firm] shall effect for any account in which such ETP Holder[, Equity ASAP Holder, or ETP Firm] has an interest or for the account of any partner, officer, director or employee thereof or for the account of any customer, a purchase or sale transaction (whether on the Corporation or on or through the facilities of, or otherwise subject to the rules of, another national securities exchange or national securities association) in a stock index warrant if the ETP Holder[, Equity ASAP Holder, or ETP Firm] has reason to believe that as a result of such transaction the ETP Holder[, Equity ASAP Holder, or ETP Firm] or partner, officer, director or employee thereof or customer would, acting alone or in concert with others, directly or indirectly, control an aggregate position in an index warrant issue, or in all warrants issued on the same stock index group, on the same side of the market, in excess of the following position limits:

(1)–(2)—No change.

(b) Whenever the Corporation determines that a person or group of persons acting in concert holds or controls an aggregate position (whether long or short) in stock index warrants in excess of the applicable position limits established pursuant to paragraph (a) of this Rule 8.10, it may direct all ETP Holders[, Equity ASAP Holders, or ETP Firms] carrying a position in stock index warrants for such person or persons to liquidate such position, as expeditiously as possible consistent with the maintenance of an orderly market, to the extent necessary to assure that such person or persons are in compliance with applicable position limits. Whenever such a directive is issued by the Corporation, no ETP Holder[, Equity ASAP Holder, or ETP Firm] receiving notice thereof shall accept any order to purchase or sell any stock index warrants based on the same stock index for the account of the person or persons named in such directive, unless in each instance the Corporation provides its express approval therefor, or until such directive is rescinded.

Commentary

.01—No change.

.02 The Corporation may establish higher position limits for [specialists'] *Market Maker* transactions than those applicable with respect to other accounts. Whenever a [specialist] *Market Maker* reasonably anticipates that he *or she* may exceed such position limits in the performance of his [specialist] *or her Market Maker* functions, he *or she* must consult with and obtain the prior approval of [a Trading Official] *the regulatory staff.*

Exercise Limits

Rule 8.11. Except with the prior approval of the Corporation in each instance, no ETP Holder[, Equity ASAP Holder, or ETP Firm] shall exercise, for any account in which such ETP Holder[, Equity ASAP Holder, or ETP Firm] has an interest, or for the account of any partner, officer, director or employee thereof, or, for the account of any customer, a long position in any stock index warrant dealt in on the Corporation if as a result thereof such ETP Holder[, Equity ASAP Holder, or ETP Firm] or partner, officer, director or employee thereof or customer, acting alone or in concert with others, directly or indirectly, has or will have exercised within any five (5) consecutive business days aggregate long positions in the number of stock index warrants set forth in Rule 8.10. The Corporation may from time to time institute other limitations concerning the exercise of stock index warrants. All such exercise limitations are separate and distinct from any other exercise limitations imposed by the issuers of index warrants.

Trading Halts or Suspensions

Rule 8.12—No change.

Reporting of Warrant Positions

Rule 8.13(a). Each ETP Holder[, Equity ASAP Holder, and ETP Firm] shall file with the Corporation a report with respect to each account in which the ETP Holder[, Equity ASAP Holder, or ETP Firm] has an interest,

each account of a partner, officer, director, or employee of such ETP [Firms or Equity ASAP] Holder and each customer account, that has established an aggregate position (whether long or short) of 100,000 warrants covering the same underlying index, currency or currency index, combining for purposes of this [rule] *Rule*: (1) long positions in put warrants and short positions in call warrants, and (2) short positions in put warrants with long positions in call warrants. The report shall be in such form as may be prescribed by the Corporation and shall be filed no later than the close of business on the next day following the day on which the transaction or transactions requiring the filing of such report occurred. Whenever a report shall be required to be filed with respect to an account pursuant to this Rule, the ETP Holder[, Equity ASAP Holder, or ETP Firm] filing the same file with the Corporation such additional periodic reports with respect to such account as the Corporation may from time to time prescribe. In computing reportable positions, warrants on a stock index shall not be aggregated with: (1) warrants on any other stock index, (2) options on any stock index or (3) options or warrants on any stock or group of stocks included in such index.

(b) In addition to the reports required by subsection (a) of this rule, each ETP Holder[, Equity ASAP Holder, or ETP Firm] shall report promptly to the Corporation any instance in which such ETP Holder[, Equity ASAP Holder, or ETP Firm] has reason to believe that a person, acting alone or in concert with others, has exceeded or is attempting to exceed the position limits prescribed in Rule 8.10 or the exercise limits prescribed in Rule 8.11.

(c)—No change.

**Section 2. Portfolio Depository Receipts**

Portfolio Depository Receipts

Rule 8.100(a)–(b)—No change.

(c) ETP Holders[, Equity ASAP Holders, or ETP Firms] shall provide to all purchasers of a series of Portfolio Depositary Receipts a written description of the terms and characteristics of such securities, in a form approved by the Corporation, not later than the time a confirmation of the first transaction in such series is delivered to such purchaser. In addition, ETP Holders[, Equity ASAP Holders, and ETP Firms] shall include such a written description with any sales material relating to a series of Portfolio Depositary Receipts that is provided to customers or the public. Any other written materials provided by [a] *an* ETP Holders[, Equity ASAP Holder, or ETP Firms] to customers or the public making specific reference to a series of Portfolio Depositary Receipts as an investment vehicle must include a statement in substantially the following form: ''A circular describing the terms and characteristics of [the series of Portfolio Depositary Receipts] is available from your broker. It is recommended that you obtain and review such circular before purchasing [the series of Portfolio Depositary Receipts]. In addition, upon request you may obtain from your broker a prospectus for [the series of Portfolio Depositary Receipts].''

An ETP Holder[, Equity ASAP Holder, or ETP Firm] carrying an omnibus account for a non-ETP Holder [or non-Equity ASAP Holder] broker-dealer is required to inform such non-ETP Holder [or non-Equity ASAP Holder] that execution of an order to purchase a series of Portfolio Depositary Receipts for such omnibus account will be deemed to constitute agreement by the non-ETP Holder [or non-equity ASAP Holders] to make such written description available to its customers on the same terms as are directly applicable ETP Holders[, Equity ASAP Holders and ETP Firms] under this [rule] *Rule*.

Upon request of a customer, and ETP Holders[, Equity ASAP Holder, or ETP Firm] shall also provide a prospectus for the particular series of Portfolio Depositary Receipts.

(d)–(e)—No change.

Rule 8.100(f)–(g)—No change.

**Rule 9**

**Conducting Business with the Public**

**Section 1. Conducting Business with the Public**

Register with the Corporation

Rule 9.1(a). Each office of an [Equity ASAP] *ETP* Holder [or ETP Firm] shall be registered with the Corporation.

Joint Quarters

Rule 9.1(b). ETP Holders[, Equity ASAP Holders, and ETP Firms] may not occupy joint quarters with anyone other than another ETP Holder[, Equity ASAP Holder, or ETP Firm] without the prior and continuing approval of the Corporation.

Office Supervision

Rule 9.1(c) (1) Each office of an [Equity ASAP] *ETP* Holder [or ETP Firm] shall be under the supervision and control of such [Equity ASAP] *ETP* Holder [or ETP Firm] to assure compliance with applicable securities laws and regulations and rules of the Corporation.

(2) The ETP Holders[, Equity ASAP Holders, ETP Firms] and Allied Persons thereof shall designate from among their group a person or persons to assume authority and responsibility for supervision of the firm's activities and establishment and maintenance of appropriate procedures and follow-up and review to determine that such control and supervision is maintained.

Rule 9.1(d). ETP Holders[, Equity ASAP Holders, and ETP Firms] shall at all times have responsibility for the proper supervision and control of their registered employees and as provided in Rule 9.1(c) shall designate a principal of the firm to be responsible for the execution of such supervisory procedures.

Guarantees

Rule 9.1(e) (1) No registered employee shall guarantee the payment of the debit balance in a customer's account to his *or her* employer or to any other creditor carrying such account without the prior consent of the Corporation.

(2) No registered employee shall represent to any customer that he *or she* will personally guarantee the account of such customer.

(3) No registered employee shall guarantee any customer against losses in his *or her* account, or in any way represent to any customer that he or *she or* his *or her* employer will guarantee the customer against such losses.

Rule 9.1(f).—No change.

Compensation Rebate

Rule 9.1(g). No registered employee shall directly or indirectly, rebate to any person, firm or corporation any part of the compensation he *or she* may receive as a registered employee; nor shall he *or she* pay such compensation or any part thereof, directly or indirectly, to any person, firm, or corporation, as a bonus, commission, fee or other consideration, for business sought or produced for him *or her* or any ETP Holder[, Equity ASAP Holder, or ETP Firm].

Registered Employee Compensation

Rule 9.1(h). No registered employee shall, directly or indirectly, take, accept or receive, from any person, firm, corporation or association, other than the ETP Holder[, Equity ASAP Holder, or ETP Firm] with whom he *or she* is registered, compensation of any nature, as a bonus, commission fee, gratuity or other consideration, in connection with any securities transactions, unless the provisions of Rule 4.3(b) have been previously complied with.

Diligence As To Accounts

Rule 9.2(a). Every ETP Holder, [Equity ASAP Holder or ETP Firm,] through a general partner, a principal executive officer or a designated authorized person, shall use due diligence to learn the essential facts relative to every customer, every order, every account accepted or carried by such ETP Holder[, Equity ASAP Holder or ETP Firm] and every person holding power of attorney over any account accepted or carried by such ETP Holder[, Equity ASAP Holder or ETP Firm].

Account Supervision

Rule 9.2(b). Every ETP Holder[, Equity ASAP Holder or ETP Firm] shall supervise diligently all accounts accepted or carried by such firm and shall exercise diligence in supervising the business practices of its registered persons and otherwise licensed persons. An ETP Holder[, Equity ASAP Holder or ETP Firm] shall adopt appropriate procedures for the opening and the maintaining of accounts, including the maintaining of records prescribed by the Bylaws and Rules of the Corporation and by the rules and regulations of the Securities and Exchange Commission, which shall include:

(1)–(5)—No change.

Customer Records

Rule 9.2(c). The ETP Holder[, Equity ASAP Holder or ETP Firm] shall keep and preserve records concerning all accounts of customers in such form and substance as to disclose at least the following information:

(1)–(4)—No change.

(5) Signature of a general partner, a principal executive officer or an authorized person who approved the opening of the account prior to or promptly after the completion of any transaction for the account of or with a customer; provided, however, that in the case of branch offices, the opening of an account for a customer may be

approved by the manager of such branch office but the action of such branch office manager shall within a reasonable time be approved by a general partner, a principal executive officer or an authorized person designated as having such authority by the general partner or by the principal executive officer who has the overall authority and responsibility for account supervision and control. The general partner, principal executive officer or authorized person approving the opening of the account shall, prior to giving his *or her* approval, be personally informed as to the essential facts relative to the customer and to the nature of and the investment objectives of the proposed account and shall indicate his *or her* approval in writing.

Commentary

.01 In the case of a margin account carried by an ETP Holder[, Equity ASAP Holder or ETP Firm] for a non-ETP [or non-Equity ASAP] corporation, definite knowledge should be had to the effect that the non-ETP [or non-Equity ASAP] corporation has the right under its charter and by-laws to engage in margin transactions for its own account and that the persons from whom orders and instructions are accepted have been duly authorized by the corporation to act on its behalf. It is advisable in each such case for the carrying firm to have in its possession a copy of the corporate charter, by-laws and authorizations. Where it is not possible to obtain such documents, an Allied Person in the ETP [Firm or Equity ASAP] Holder carrying the account should prepare and sign a memorandum for its files indicating the basis upon which he *or she* believes that the corporation may properly engage in margin transactions and that the persons acting for the corporation have been duly authorized to do so.

In the case of a cash account carried for a non-ETP [or non-Equity ASAP] corporation, the ETP [Firm or Equity ASAP] Holder should assure itself through a general partner or an officer who is a holder of voting stock that persons entering orders and issuing instructions with respect to the account do so upon the proper authority.

.02 When an agency account is carried by an ETP [Firm or Equity ASAP] Holder its files should contain the name of the principal for whom the agent is acting and written evidence of the agent's authority.

.03 When Estate and Trustee accounts are involved an ETP [Firm or Equity ASAP] Holder should obtain counsel's advice as to the documents which should be obtained.

Employee Accounts

Rule 9.3(a). No ETP Holder[, Equity ASAP Holder, or ETP Firm] shall, without the prior consent of the employer, make:

(1) A cash or margin transaction or carry a margin account in securities or in commodities in which an employee of the Corporation, or of any ETP Holder, [Equity ASAP Holder, or ETP Firm,] is directly or indirectly interested. Duplicate reports and statements shall be sent promptly to the employer.

(2) A margin transaction or carry a margin account in securities or in commodities in which an employee of a bank, trust company, savings institution, insurance company or any individual or firm engaged in the business of dealing in securities, is directly or indirectly interested.

This [rule] *Rule* applies to all employees of insurance companies regardless of whether they are compensated on a salary or commission basis. However, it is not considered applicable to independent insurance agents.

A person who is clearly designated by the charter or by-laws of a bank, trust company, insurance company, etc., as an officer of such institution is not considered an ''employee'' for the purpose of this Rule.

ETP Holder and Allied Person Accounts

Rule 9.3(b). No ETP Holder[, Equity ASAP Holder or ETP Firm] shall carry an account for [an] another ETP Holder[, Equity ASAP Holder,] or Allied Person of another ETP Holder[, Equity ASAP Holder or ETP Firm] without the prior written consent of another person who is an ETP Holder[, Equity ASAP Holder,] or Allied Person of such other firm.

Duplicate reports and statements shall be sent to such general partner or an officer who is a holder of voting stock designated in such consent unless their submission is waived in writing and a permanent record of such waiver is retained by both the carrying firm and the consenting firm.

Proxies Voting

Rule 9.4. No ETP Holder[, Equity ASAP Holder, or ETP Firm] shall sign or give a proxy to vote any stock registered in the name or under control of such ETP Holder[, Equity ASAP Holder, or ETP Firm] unless (a) the ETP Holder[, Equity ASAP Holder, or firm] is the actual owner thereof, (b) pursuant to the written instructions of such actual owner, or (c) pursuant to the rules of another national securities exchange to which he or *she or* his *or her* firm is responsible.

Solicitation Expense

Rule 9.5. Any expense incident to the securing of proxy instructions shall be charged by the ETP Holder[, Equity ASAP Holder, or ETP Firm] to the party or parties requesting their solicitation.

Discretion as to Customers' Accounts

Rule 9.6(a). No ETP Holder[, Equity ASAP Holder, or ETP Firm] shall permit any person employed by such ETP Holder[, Equity ASAP Holder, or ETP Firm] or by any other ETP Holder[, Equity ASAP Holder, or ETP Firm] to exercise discretion in the handling of a transaction for a customer of such ETP Holder[, Equity ASAP Holder, or ETP Firm], and no ETP Holder[, Equity ASAP Holder, or ETP Firm] or any participant therein shall delegate to any such employee any discretionary power vested by a customer in such ETP Holder[, Equity ASAP Holder, or ETP Firm] unless in either case the prior written authorization of the customer has been received; and if such discretionary authority runs, directly or by redelegation, to an employee of another ETP Holder[, Equity ASAP Holder, or ETP Firm,] the carrying ETP Holder[, Equity ASAP Holder, or ETP Firm] must obtain the prior written consent of the employer of the individual authorized to exercise discretion. An ETP Holder[, Equity ASAP Holder, or ETP Firm] or Allied Person of the carrying ETP [Firm or Equity ASAP] Holder shall approve and initial each discretionary order entered by an employee of such ETP [Firm or Equity ASAP] Holder of another ETP [Firm or Equity ASAP] Holder on the day the order is entered. The provisions of this Rule shall not apply to discretion as to the price at which or the time when an order given by a customer for the purchase or sale of a definite amount of a specified security shall be executed.

Records of Discretionary Accounts

Rule 9.6(b). The ETP Holder[, Equity ASAP Holder, or ETP Firm] shall keep and preserve records of all customer discretionary accounts pursuant to the provisions of this [rule] *Rule* which shall include the signature of the individual who may exercise discretion in handling the account. All such accounts shall be reviewed by a general partner or principal executive officer at frequent intervals.

Marking Discretionary Orders

Rule 9.6(c). Every ETP Holder[, Equity ASAP Holder, or ETP Firm] shall identify each discretionary order by appropriately marking each discretionary order accordingly.

Pledging Customer Securities

Rule 9.7(a). An agreement between an ETP Holder[, Equity ASAP Holder, or ETP Firm] and a customer authorizing the ETP Holder[, Equity ASAP Holder, or ETP Firm] to pledge securities carried for the account of a customer or to lend such securities does not justify pledging or loaning more of such securities than is fair and reasonable in view of the indebtedness of said customer to said ETP Holder[, Equity ASAP Holder, or ETP Firm].

Use of Customer Securities

Rule 9.7(b). The improper use of customer fully-paid and excess margin securities is inconsistent with just and equitable principles of trade, and no form of general agreement between an ETP Holder[, Equity ASAP Holder, or ETP Firm] and a customer shall warrant the use or lending of such securities by the ETP Holder[, Equity ASAP Holder, or ETP Firm].

Customer Protection—Reserves and Custody of Securities

Rule 9.7(c). An ETP Holder[, Equity ASAP Holder, or ETP Firm] shall obtain custody and control of securities and maintain reserves as prescribed by Rule 15c3–3 promulgated under the Securities Exchange Act of 1934.

Agreements for Use of Customer Securities

Rule 9.7(d). No ETP Holder[, Equity ASAP Holder, or ETP Firm] shall lend, either to itself as a broker-dealer or to others, securities which are held on margin for a customer and which are eligible to be pledged or loaned, unless such ETP Holder[, Equity ASAP Holder, or ETP Firm] shall first have obtained a separate written authorization from such customer permitting the loaning of such securities by the ETP Holder[, Equity ASAP Holder, or ETP Firm].

Business Connections

Rule 9.8. No ETP Holder[, Equity ASAP Holder, or ETP Firm] shall be directly or indirectly interested in or associated in business with, or have his *or her* office directly or indirectly connected by public or private wire or other method or contrivance with, or transact any business directly or indirectly with or for

(a)–(c)—No change.

Margin Agreements

Rule 9.9. No ETP Holder[, Equity ASAP Holder, or ETP Firm] shall hypothecate or rehypothecate customer securities unless such ETP Holder[, Equity ASAP Holder, or ETP Firm] has obtained from its customer an executed margin agreement in a form satisfactory to the Corporation.

Assuming Losses

Rule 9.10. No ETP Holder[, Equity ASAP Holder or ETP Firm] shall assume for his *or her* own account of his *or her* firm, a contract made for a customer after a loss to the customer has been established or ascertained, unless the contract was made by mistake or unless approval of the Corporation has first been obtained.

Confirmations

Rule 9.11. No ETP Holder[, Equity ASAP Holder or ETP Firm] shall address confirmations, statements or other communications to a non-ETP [or non-Equity ASAP] customer in care of a person holding power of attorney over the customers' account unless either (a) the customer has instructed the ETP Holder[, Equity ASAP Holder or ETP Firm] in writing to send such confirmations, statements or other communications in care of such person, or (b) duplicate copies are sent to the customer at some other address designated in writing by him *or her*, or at the address of any ETP Holder[, Equity ASAP Holder or ETP Firm,] or in care of a partner or employee of any firm.

Upon written request, the Corporation may waive these requirements.

COD Orders—Partial Delivery

Rule 9.12(a). No ETP Holder[, Equity ASAP Holder or ETP Firm] shall accept an order from a customer pursuant to an arrangement whereby payment for securities purchased or delivery of securities sold is to be made to or by an agent of the customer unless all of the following procedures are complied with:

(1) The ETP Holder[, Equity ASAP Holder or ETP Firm] shall have received from the customer prior to or at the time of accepting the order, the name and address of the agent and the name and account number of the customer on file with the agent;

(2)—No change.

(3) The ETP Holder[, Equity ASAP Holder or ETP Firm] delivers to the customer a confirmation, or all relevant data customarily contained in a confirmation with respect to the execution of the order, in whole or in part, not later than the close of business on the next business day after any such execution; and

(4) The ETP Holder[, Equity ASAP Holder or ETP Firm] has obtained an agreement from the customer that the customer will furnish his *or her* agent instructions with respect to the receipt or delivery of the securities involved in the transaction promptly upon receipt by the customer of each confirmation, or the relevant data as to each execution, relating to such order (even though such execution represents the purchase or sale of only a part of the order), and that in any event the customer will assure that such instructions are delivered to his *or her* agent no later than:

(A)–(B)—No change.

(5) The customer or its agent shall utilize the facilities of a securities depository for the confirmation, acknowledgement, and book entry settlement of all depository eligible transactions.

(A) For the purpose of this [rule] *Rule* ''securities depository'' shall mean a clearing agency as defined in Section 3(a)(23) of the Securities Exchange Act of 1934 that is registered with the Securities and Exchange Commission pursuant to Section 17A(b)(2) of the Act.

(B) For the purpose of this [rule *Rule,* ''depository eligible transactions'' shall mean transactions in those securities for which confirmation, acknowledgement, and book entry settlement can be performed through the facilities of a securities depository as defined in Rule 9.12(a)(5)(A).

(b) The following transaction shall be exempt from the provisions of paragraph (a)(5) of this [rule] *Rule*:

(1)—No change.

(2) Transactions wherein both an ETP Holder[, Equity ASAP Holder or ETP Firm] and its agent are not participants in a securities depository;

(3)—No change.

Long Sales

Rule 9.13(a). For the purposes of effecting delivery within the time period required under regular settlement procedures:

(1) Any sale of a security for a customer which is designated as a ''long'' sale may be effected only if:

(A) The customer is ''long,'' in good deliverable form, the security to be sold on the books [on] *of* the selling ETP Holder, [Equity ASAP Holder or ETP Firm,] or

(B) The selling ETP Holder[, Equity ASAP Holder or ETP Firm] notes on he order ticket that

(i)–(ii)—No change.

(2)—No change.

(3) the customer presents to the selling ETP Holder, [Equity ASAP Holder or ETP Firm,] with proper instructions, a security convertible into or exchangeable for, or an option, warrant or right which entitles him *or her* to purchase, together with the necessary funds, prior to settlement date, the security to be sold.

Account Designation

Rule 9.14. Before any order for a customer of an ETP Holder[, Equity ASAP Holder or ETP Firm] is executed, including the case where an order is to be executed by the issuance [from the Floor] of a commitment to trade through ITS or any other Application of the System, there shall be placed upon the order slip or other record the name or designation of the account for which such order is to be executed. No change in such account name or designation shall be made unless the change has been authorized by the ETP Holder[, Equity ASAP Holder or ETP Firm] or a partner, who shall, prior to giving his *or her* approval of such change, be personally informed of the essential facts relative thereto and shall indicate his *or her* approval of such change in writing on the order.

Statements of Account to Customers

Rule 9.15. Except with the permission of the Corporation, ETP Holders[, Equity ASAP Holders or ETP Firms] shall send their customers statements of account showing security and money positions and entries at least quarterly to all accounts having an entry, money or security position during the preceding quarter. (See also SEC Rule 15c3–2 concerning quarterly notices of free credit balances on statements.)

Statement or Notice on Interest

Rule 9.16—No change.

Books and Records

Rule 9.17. ETP Holders[, Equity ASAP Holder or ETP Firms] shall make and retain all the books and records prescribed by the Bylaws and Rules of the Corporation, the rules and regulations of the Securities and Exchange Commission and the constitution, rules and regulations of other regulatory or governmental bodies to which such ETP Holders[, Equity ASAP Holders or ETP Firms] are subject. Such books and records shall be retained for periods as prescribed and shall be made available for inspection by the Corporation.

Doing a Public Business in Options

Rule 9.18. Rule 9.18 shall be applicable to ETP Holder[, Equity ASAP Holders, or ETP Firms] transacting business with the public in option contracts issued by the Options Clearing Corporation. Except to the extent that specific provisions of Rule 9.18 govern, or unless the context otherwise requires, the provisions of all other sections of this [rule] *Rule* shall be applicable to the conduct of accounts.

(a) Registration of Principals and Representatives.

No ETP Holder[, Equity ASAP Holder, or ETP Firm] shall be approved to transact business with the public in option contracts, unless those persons associated with the ETP Holder[, Equity ASAP Holder, or ETP Firm] who are designated as Options Principals or who are designated as Registered Representatives have been approved by and registered with the Corporation as such, pursuant to the provisions of Rule 9.26 and Rule 9.27, as appropriate.

(b) Opening of Accounts

No ETP Holder[, Equity ASAP Holder, or ETP Firm] shall accept an order from a customer for the purchase or sale (writing) of an option contract unless the customer's account has been approved for options trading in accordance with the provisions of Rule 9.18.

(1) Diligence in Opening Account—In approving a customer's account for options transactions, and ETP Holder[, Equity ASAP Holder, or ETP Firm] shall exercise due diligence to learn the essential facts as to the customer and his *or her* investment

objectives and financial situation, and shall make a record of such information which shall be retained in accordance with Rule 9.18(d). Based upon such information, the branch office manager or other Registered Options Principal shall approve in writing the customer's account for options transactions; provided, that if the branch office manager is not a Registered Options Principal, his *or her* approval shall within a reasonable time be confirmed by a Registered Options Principal.

(2) Disclosure—At or prior to the time a customer's account is approved for options trading, the ETP Holder[, Equity ASAP Holder or ETP Firm] shall deliver to the customer a current Options Disclosure Document in accordance with the requirements of paragraph (g) of this Section.

(3) Account Agreement—Within 15 days after a customer's account has been approved for options transactions an ETP Holder[, Equity ASAP Holder or ETP Firm] shall obtain from the customer a written agreement that (A) the customer is aware of and agrees to be bound by the Rules of the Corporation and the PCX Parent applicable to the trading of option contracts and the Rules of the Options Clearing Corporation and (B) the customer agrees not to violate, either alone or in concert with others, the position limits or the exercise limits established by the PCX Parent.

(4) Verification of Customer Background and Financial Information—The background and financial information upon which the account of every new customer that is a natural person has been approved for options trading, unless the information is included in the customer's account agreement, shall be sent to the customer for verification within fifteen (15) days after the customer's account has been approved for options transactions. A copy of the background and financial information on file with the ETP Holder[, Equity ASAP Holder or ETP Firm] shall also be sent to the customer for verification within fifteen (15) days after the ETP Holder[, Equity ASAP Holder or ETP Firm] becomes aware of any material change in the customer's financial situation.

(5) Options Disclosure document to be Furnished—At or prior to the time a customer's account is approved for options transactions, an ETP Holder[, Equity ASAP Holder or ETP Firm] shall furnish the customer with a current Options Disclosure Document in accordance with the requirements of Rule 9.18(g).

(6) Every ETP Holder[, Equity ASAP Holder or ETP Firm] transacting business with the public in uncovered options contracts shall develop, implement, and maintain specific written procedures governing the conduct of such business which shall include, but not be limited to, the following:

(A)–(E)—No change.

Commentary

.01 In fulfilling its obligations pursuant to paragraph (b)(1) of Rule 9.18 with respect to options customers that are natural persons, an ETP Holder[, Equity ASAP Holder or ETP Firm] shall seek to obtain the following information at a minimum (information shall be obtained for all participants in a joint account):

1.–8.—No change.

In addition, the customer's account records shall contain the following information, if applicable:

a.–g.—No change.

The ETP Holder[, Equity ASAP Holder, or ETP Firm] should consider utilizing a standard account approval form so as to ensure the receipt of all the required information.

.02—No change.

.03 The requirement of paragraph (b)(4) of Rule 9.18 for the initial and subsequent verification of customer background and financial information may be satisfied by sending to the customer the information required in Items 1 through 6 of Commentary .01 above as contained in the ETP [Holder, Equity ASAP Holder or ETP Firm's] *Holder's* records and providing the customer with an opportunity to correct or complete the information. In all cases, absent from the customer to the contrary, the information will be deemed to be verified.

.04 Before approving an account of a trust, pension fund, profit sharing plan or other fiduciary for options trading, an ETP Holder[, Equity ASAP Holder or ETP Firm] shall be satisfied that the instruments under which the fiduciary is acting permit options trading.

.05 Before approving an account with respect to which trading authorization has been granted to a third person who is not an employee of the ETP Holder[, Equity ASAP Holder or ETP Firm] for options trading, the ETP Holder[, Equity ASAP Holder or ETP Firm] shall obtain written evidence of the agent's authority to act and that such authority specifically includes options trading.

.06 Before approving an account of an investment partnership or an investment club for options trading, the ETP Holder[, Equity ASAP Holder or ETP Firm] shall obtain written evidence of the authority of the person signing the agreement required by this paragraph to sign such agreement on behalf of such partnership or club, as the case may be, and that such authority specifically includes options trading. Information shall also be obtained with respect to any current long or short option positions of the respective partners or member of the partnership or investment club.

.07—No change.

(c) Suitability.

(1) No ETP Holder[, Equity ASAP Holder or ETP Firm] or registered person thereof shall recommend to any customer any transaction for the purchase or sale (writing) of an option contract, currency warrant, or an index warrant unless such ETP Holder[, Equity ASAP Holder or ETP Firm] or registered person has reasonable grounds to believe that the entire recommended transaction is not unsuitable for such customer on the basis of information furnished by such customer after reasonable inquiry concerning the customer's investment objectives, financial situation and needs and any other information known by such ETP Holder[, Equity ASAP Holder or ETP Firm] or registered person.

(2) No ETP Holder[, Equity ASAP Holder or ETP Firm,] Registered Options Principal or Registered Representative shall recommend to a customer an opening transaction in any option contract, currency warrant, or index warrant unless the person making the recommendation has a reasonable basis for believing at the time of making the recommendation that the customer has such knowledge and experience in financial matters that he *or she* may reasonably be expected to be capable of evaluating the risks of the recommended transaction, and is financially able to bear the risks of the recommended position in the option contract, currency warrant, or index warrant.

(d) Supervision of Accounts.

Every ETP Holder[, Equity ASAP Holder or ETP Firm] shall comply with the provisions of rule 9.1(b) in exercising its supervisory responsibilities. In addition to such provisions, every ETP Holder[, Equity ASAP Holder or ETP Firm] shall comply with the following provisions as they relate to its options business.

(1) Senior Registered Options Principal—Every ETP Holder[, Equity ASAP Holder or ETP Firm] shall develop and implement a written program for the review of the organization's non-ETP [or non-Equity ASAP] customer accounts and all orders in such accounts, insofar as such accounts and orders relate to option contracts. This program shall be under the supervision of a designated Senior Registered Options Principal (''Senior ROP'') who is an officer (in the case of a corporation) or general partner (in the case of a partnership) of the ETP Holder[, Equity ASAP Holder or ETP Firm] who is specifically identified to the Corporation as the senior ROP.

(2) Compliance Registered Options Principal—ETP [Holder, Equity ASAP Holder or ETP Firm] *Holders* shall designate and specifically identify to the Corporation a Compliance Registered Options Principal, (who may be the Senior Registered Options Principal), who shall have no sales functions and shall be responsible to review and to propose appropriate action to secure the ETP [Holder, Equity ASAP Holder or ETP Firm's] *Holder's* compliance with securities laws and regulations in respect of its options business. The Compliance Registered Options Principal shall regularly furnish reports directly to the compliance officer (if the Compliance Registered Options Principal is not himself *or herself* the compliance officer) and to other senior management of the ETP Holder[, Equity ASAP Holder or ETP Firm]. The requirement that the Compliance Registered Options Principal shall have no sales functions does not apply to an ETP Holder[, Equity ASAP Holder or ETP Firm] that has received less than $1,000,000 in gross commissions on options business as reflected in its FOCUS Report for either of the preceding two fiscal years or that currently has 10 or fewer Registered Options Representatives.

(3)—No change.

(4) Each ETP Holder[, Equity ASAP Holder or ETP Firm] shall maintain at the principal supervisory office having jurisdiction over the office servicing the customer's account, or have readily accessible and promptly

retrievable, information to permit review of each customer's options account, on a timely basis to determine (i) the compatibility of options transactions with investment objectives and with the types of transactions for which the account was approved; (ii) the size and frequency of options transactions; (iii) commission activity in the account; (iv) profit or loss in the account; (v) undue concentration in any options class or classes, and (vi) compliance with the provisions of Regulation T of the Federal Reserve Board.

Commentary

.01—No change.

.02 Every ETP Holder[, Equity ASAP Holder or ETP Firm] shall establish, maintain and enforce written procedures which detail the methods used to supervise exchange options transactions. These procedures should also detail the methods used to supervise all non-ETP [or non-Equity ASAP] customer accounts including all orders in such accounts, insofar as such accounts and orders relate to option contracts.

.02 Every ETP Holder[, Equity ASAP Holder or ETP Firm] shall also develop and implement specific written procedures concerning the manner of supervision of customer accounts maintaining uncovered short (written) option positions and specifically providing for frequent supervisory review of such accounts.

(e) Discretionary Accounts

(1) Authorization and Approval Required—No ETP Holder[, Equity ASAP Holder or ETP Firm] shall exercise any discretionary power with respect to trading in option contracts, currency warrants, or index warrants in a customer's account, or accept orders for currency warrants, index warrants or option contracts for an account from a person other than the customer, except in compliance with the provisions of Rule 9.6(a) and in addition (i) the written authorization of the customer required by Rule 9.6(a) shall specifically authorize options trading in the account; (ii) the account shall have been accepted in writing by a Registered Options Principal. The Senior Registered Options Principal shall review the acceptance of each discretionary account to determine that the Registered Options Principal accepting the account has a reasonable basis for believing that the customer was able to understand and bear the risks of the strategies or transactions proposed, and he *or she* shall maintain a record of the basis for his *or her* determination. Each discretionary order shall be approved and initiated on the day entered by the branch office manager or other Registered Options Principal, provided that if the branch office manager is not a Registered Options Principal, his *or her* approval shall be confirmed within a reasonable time by a Registered Options Principal. Every discretionary order shall be identified as discretionary on the order at the time of entry. Discretionary accounts shall receive frequent appropriate supervisory review by the Compliance Registered Options Principal. The provisions of this subparagraph shall not apply to discretion as to the price at which or the time when an order given by a customer for the purchase or sale of a definite number of option contracts in a specified security shall be executed.

(2) Prohibited Transactions—No ETP Holder[, Equity ASAP Holder or ETP Firm] having discretionary power over a customer's account shall, in the exercise of such discretion, execute or cause to be executed therein any purchases or sales of option contracts, currency warrants, or index warrants which are excessive in size or frequency in view of the financial resources in such account.

(3) Record of Transactions—A record shall be made of every transaction in option contracts, currency warrants, or index warrants in respect to which an ETP Holder[, Equity ASAP Holder or ETP Firm] has exercised discretionary authority, clearly reflecting such fact and indicating the name of the customer, the designation and number of the option contracts, currency warrants, or index warrants the premium and the date and time when such transaction was effected.

(4)—No change.

Commentary

.01—No change.

(f) Confirmations.

Every ETP Holder[, Equity ASAP Holder or ETP Firm] shall promptly furnish to each customer a written confirmation of each transaction in option contracts for such customer's account. Each such confirmation shall show the type of option, the underlying stock, the expiration month, the exercise price, the number of option contracts, the premium, commissions, the transaction and settlement dates, whether the transaction was a purchase or a sale (writting) transaction, whether the transaction was an opening or a closing transaction, and whether the transaction was effected on a principal or agency basis. The confirmation shall by appropriate symbols distinguish between exchange option transactions and other transactions in option contracts and between such transactions and transactions in other options.

(g) Delivery of Current Options Disclosure Document and Prospectus

(1) Options Disclosure Documents. Every ETP Holder[, Equity ASAP Holder or ETP Firm] shall deliver a current Options Disclosure Document (the formal title of which is ''Understanding the Risks and Uses of Listed Options'') to each customer at or prior to the time each customer's account is approved for options trading. Thereafter, each amended Options Disclosure Document shall be distributed to every customer having an account approved for options trading, or, in the alternative, shall be distributed not later than the time a confirmation of a transaction is delivered to each customer who enters into an options transaction. The term ''current Options Disclosure Document'' means, as to any category of underlying security, the most recent edition of such document that meets the requirements of Rule 9b–1 under the Securities Exchange Act of 1934.

(2) Prospectus. Every ETP Holder[, Equity ASAP Holder or ETP Firm] shall deliver a copy of the current prospectus of the Options Clearing Corporation to each customer who requests one. The Corporation will advise ETP Holder[, Equity ASAP Holder or ETP Firm] when a new prospectus is available. The term ''current prospectus of the Options Clearing Corporation'' means the prospectus portion of Form S–20 which then meets the delivery requirements of Rule 153(b) of the Securities Act of 1933.

(3) The written description of risks required by Rule 9.18(b)(6) shall be in a format prescribed by the Corporation or in a format developed by the ETP Holder[, Equity ASAP Holder or ETP Firm,] provided it contains substantially similar information as the prescribed Corporation format and has received prior written approval of the Corporation.

Commentary

.01 Where the customer of an ETP Holder[, Equity ASAP Holder or ETP Firm] is a broker or dealer entering his *or her* orders with the ETP Holder[, Equity ASAP Holder or ETP Firm] in a single omnibus account, such ETP Holder[, Equity ASAP Holder or ETP Firm] shall take reasonable steps to assure that the broker or dealer is furnished reasonable quantities of current Options Disclosure Documents, as requested by him *or her* in order to enable him *or her* to comply with the requirements of this paragraph (g).

.02 Where a broker or dealer enters orders for his *or her* customers with, or clears transactions through, an ETP Holder[, Equity ASAP Holder or ETP Firm] on a fully disclosed basis and such ETP Holder[, Equity ASAP Holder or ETP Firm] carries the accounts of such customers, the responsibility for delivering a current Options Disclosure Document as provided herein shall rest with the carrying ETP Holder[, Equity ASAP Holder or ETP Firm]. However, such ETP Holder[, Equity ASAP Holder or ETP Firm] may rely upon the good faith representation of the introducing broker or dealer that a current Options Disclosure Document has been delivered in compliance with this paragraph (g).

(h) Transactions with Issuers.

No ETP Holder[, Equity ASAP Holder or ETP Firm] shall accept an order for the account of any corporation which is the issuer of an underlying stock for the sale (writing) of an option contract with respect to that underlying stock.

(i) Restricted Stock.

For the purposes of: (i) Covering a short position in a call option contract, or (ii) delivery pursuant to the exercise of a put option contract, or (iii) satisfying an exercise notice assigned in respect of a call option contract, no ETP Holder[, Equity ASAP Holder or ETP Firm] shall accept shares of an underlying stock, which may not be sold by the holder thereof except upon registration pursuant to the provisions of the Securities Act of 1933 or pursuant to SEC rules promulgated under the Securities Act of 1933, unless, at the time such securities are accepted and at any later time such securities are delivered, applicable provisions of the Securities Act of 1933 and the rules thereunder have been complied with by the holder of such securities.

(j) Statement of Accounts.

Every ETP Holder[, Equity ASAP Holder or ETP Firm] shall send to its customers statements of account showing security and money positions entries, interest charges and any special charges that have been assessed

against such account during the period covered by the statement; provided, however, that such charges need not be specifically delineated on the statement if they are otherwise accounted for on the statement and have been itemized on transaction confirmations. With respect to options customers having a general (margin) account, such statement shall also provide the mark-to-market price and market value of each options position and other security position in the general (margin) account, the total market value of all positions in the account, the outstanding debit balance in the account, and the general (margin) account equity. The statement shall bear a legend stating that further information with respect to commissions and other charges related to the execution of listed option transactions has been included in confirmations of such transactions previously furnished to the customer, and that such information will be made available to the customer promptly upon request.

Statements of account shall be sent at least quarterly to all accounts having a money or a security position during the preceding quarter and not less frequently than once every month to each customer in whose account there has been an entry during the preceding month with respect to an option contract.

The statement shall also bear a legend requesting the customer to promptly advise the ETP Holder[, Equity ASAP Holder or ETP Firm] of any material change in the customer's investment objectives or financial situation.

Commentary

.01 For purposes of the foregoing Section, general (margin) account equity shall be computed by subtracting the total of the ''short'' security values and any debit balance from the total of the ''long'' security values and any credit balance.

(k) Doing Business with the Public.

An [individual] *sole proprietor* ETP [Holder or Equity ASAP Holder] may not transact business with the public, unless such Holder receives prior written approval from the Corporation. To qualify to transact business with the public, the [individual] *sole proprietor* ETP [Holder or Equity ASAP] Holder shall demonstrate compliance with the general requirements of the Corporation as prescribed by the Bylaws, Rules and procedures of the Corporation.

(l) Customer Complaints.

(1) Every ETP Holder[, Equity ASAP Holder or ETP Firm] conducting a non-ETP [or non-Equity ASAP] customer business shall make and keep current a separate central log, index or other file for all options-related complaints, through which these complaints can easily be identified and retrieved. The term ''options-related complaint'' shall mean any written statement by a customer or person acting on behalf of a customer alleging a grievance arising out of or in connection with listed options. The central file shall be located at the principal place of business of the ETP Holder[, Equity ASAP Holder or ETP Firm] or such other principal office as shall be designated by the ETP Holder[, Equity ASAP Holder or ETP Firm]. At a minimum, the central file shall include: (i) Identification of complainant, (ii) date complaint was received, (iii) identification of Registered Representative servicing the account, (iv) a general description of the matter complained of, and (v) a record of what action, if any, has been taken by the ETP Holder[, Equity ASAP Holder or ETP Firm] with respect to the complaint. Each options-related complaint received by a branch office of an [Equity ASAP] *ETP* Holder [or ETP Firm] shall be forwarded to the office in which the separate, central file is located not later than thirty (30) days after receipt by the branch office. A copy of every options-related complaint shall be maintained at the branch office that is the subject of the complaint.

(m) Branch Offices of [Equity ASAP] *ETP* Holders [or ETP Firms].

No branch office of an [Equity ASAP] *ETP* Holder [or ETP Firm] shall transact options business with the public unless the manager of such branch office has been qualified as a Registered Options Principal; provided, that this requirement shall not apply to branch offices in which not more than three Registered Representatives are located so long as the [Equity ASAP] *ETP* Holder [or ETP Firm] can demonstrate that the options activities of such branch offices are appropriately supervised by a Registered Options Principal.

Transfer of Accounts

Rule 9.19. Every ETP Holder[, Equity ASAP Holder or ETP Firm] shall, upon written request of a customer, expedite the transfer of a customer's account pursuant to such customer's instructions.

Transactions for Public Customers

Rule 9.20(a). Where an ETP Holder[, Equity ASAP Holder or ETP Firm] is doing business with the public in accordance with these Rules and is also associated with a Market Maker, such ETP Holder[, Equity ASAP Holder or ETP Firm] shall file such reports as the Corporation may require of transactions for customers in classes of option contracts to which such Market Maker has been appointed pursuant to *PCX Parent* Rule 6.35.

Telemarketing

Rule 9.20(b). No ETP Holder[, Equity ASAP Holder or ETP Firm] or associated person of such Holder [or Firm] may:

(1)—No change.

(2) Make an outbound telephone call to any person for the purpose of soliciting the purchase of securities or related services without disclosing promptly and in a clear and conspicuous manner to the called person the following information:

(A) the identity of the caller and the ETP Holder[, Equity ASAP Holder or ETP Firm];

(B)–(C)—No change.

(3) The prohibitions of subsections (b)(1) and (b)(2), above, do not apply to telephone calls by any person associated with an ETP Holder[, Equity ASAP Holder or ETP Firm,] or another associated person acting at the direction of such person for the purpose of maintaining and servicing an account of an existing customer of the ETP Holder[, Equity ASAP Holder or ETP Firm] under the control of or assigned to such associated person if such person places such calls:

(A)–(C)—No change.

The scope of this Rule 9.20(b) is limited to the telemarketing calls described herein. The terms of this Rule do not otherwise expressly or by implication impose on ETP Holders[, Equity ASAP Holders or ETP Firms] or participants any additional requirements with respect to the relationship between at ETP Holder[, Equity ASAP Holder or ETP Firm] or participant and a customer or between a person associated with an ETP Holder[, Equity ASAP Holder or ETP Firm] or participant organization and a customer. For the purposes of subsection (b)(3), the term ''existing customer'' means a customer for whom the broker or dealer, or a clearing broker or dealer on behalf of such broker or dealer, carries an account.

(c) Each ETP Holder[, Equity ASAP Holder or ETP Firm] shall make and maintain a centralized list of persons who have informed the ETP Holder[, Equity ASAP Holder or ETP Firm] or any employee thereof, that they do not wish to receive telephone solicitations, and shall refrain from engaging in telephone solicitations of persons named on that list.

(d) No ETP Holder[, Equity ASAP Holder or ETP Firm] or person associated with an ETP Holder, [Equity ASAP Holder or ETP Firm,] may obtain from a customer or submit for payment a check, draft, or other form of negotiable paper drawn on a customer's checking, savings, share, or similar account, without that person's express written authorization, which may include the customer's signature on the negotiable instrument. Each ETP Holder[, Equity ASAP Holder or ETP Firm] shall maintain the authorization required by this subsection (d) for a period of three years.

Commentary

.01 ETP Holders[, Equity ASAP Holders or ETP Firms] that engage in telephone solicitation to market their products and services (''telemarketing'' or ''cold calling'') are subject to the requirements of the rules of the Federal Communications Commission and the Securities and Exchange Commission relating to telemarketing practices and the rights of telephone users. This includes, but is not limited to, the requirement to make and maintain a list of persons who do not want to receive telephone solicitation (a ''do-not-call'' list).

**Section 2. Advertising and Sales Literature**

Policy

Rule 9.21(a). It shall be considered conduct inconsistent with just and equitable principals of trade for an ETP Holder, [Equity ASAP Holder or ETP Firm,] directly or indirectly, to publish, circulate or distribute any advertisement, sales literature or market letter that the ETP Holder[, Equity ASAP Holder or ETP Firm] knows or has reason to know contains any untrue statement of a material fact or is otherwise false or misleading.

Exemptions

Rule 9.21(b). The following [rules] *Rules* shall apply to all ETP Holders[, Equity ASAP Holders or ETP Firms] of the Corporation unless the ETP Holder[, Equity ASAP Holder or ETP Firm] is subject to the jurisdiction of

another national securities exchange or association designated by the Board of Directors as having comparable standards.

Advertisements

Rule 9.22(a). All advertisements prior to publication shall be submitted to the Corporation for approval as to form and presentation, except such routine advertisements as (1) Business cards or so-called tombstone ads, (2) announcements that specific securities are bought, sold or quoted, (3) offering literature concerning a specific security or securities, (4) announcements relating to changes in an ETP Holder, [Equity ASAP Holder or ETP Firm,] (5) inclusion of an ETP [Holder, Equity ASAP Holder or ETP Firm's] *Holder's* name in an underwriting advertisement, or (6) advertisements complying with any rule or regulations of the Securities and Exchange Commission under the Securities Act of 1933, or Securities Exchange Act of 1934. Copies of all ads should be retained by the ETP Holder[, Equity ASAP Holder or ETP Firm] for at least 3 years.

Refer to Pacific Exchange

Rule 9.22(b). Advertisements by ETP Holders[, Equity ASAP Holders or ETP Firms] for insertion in local papers or other media should refer to the *Archipelago Exchange, a facility of PCX Equities, Inc. and the* Pacific Exchange, Inc.*,* when a reference is made to membership in any securities exchange.

Sales Literature—Market Letters

Rule 9.23. Each market letter, research report and all sales literature prepared and issued by an ETP Holder[, Equity ASAP Holder or ETP Firm] for general distribution to customers or the public shall be approved in advance by a principal of the firm who has been designated such authority. Market letters, research reports and sales literature that refer to the market or to companies or securities, listed or unlisted, must be retained by the issuing ETP Holder[, Equity ASAP Holder or ETP Firm] for at least 3 years. The copies retained must contain the name of the individual approving its issuance and will be subject to delivery upon request to the Corporation and must at all times within the 3 year period be readily available. For purposes of this Rule, scripts that are used for telemarketing calls as described in Rule 9.20(b), are deemed to be ''sales literature.''

Radio, Television, Telephone and Other Reports

Rule 9.24. ETP Holders[, Equity ASAP Holders, or ETP Firms] for which the Corporation is the designated examining authority (''DEA'') desiring to broadcast Corporation quotations on radio or television programs, or in public telephone market reports, or to make use of radio or television broadcasts for any business purpose, or to make use of the Internet for the purpose of providing market quotations or advertising to the general public, must first obtain the consent of the Corporation by submitting an outline of the program to the Corporation.

The text of all commercials and program material (except lists of market quotations) about securities or investing sponsored by ETP Holders[, Equity ASAP Holders, or ETP Firms] on radio, television or public telephone market reports, or the Internet, or program material supplied to these media must be sent to the Corporation promptly following the program in which it is used.

Standards

Rule 9.25. The Corporation cannot be responsible for the accuracy and completeness of factual information, nor the opinions of ETP Holders[, Equity ASAP Holders, or ETP Firms] in advertisements, sales literature or radio or television broadcasts. However, general policy to be followed in written communications with the public should be substantially as follows:

(a) In making recommendations there should be a reasonable basis for the recommendation and the following facts disclosed:

(1)–(2)—No change.

(3) If (2) applies, whether the ETP Holder[, Equity ASAP Holder, or ETP Firm] intends to buy or sell the securities recommended for his *or her* own account;

(4)–(5)—No change.

(6) If material issued refers to past recommendations, all such recommendations as to the same type, kind, grade or classification of securities made by an ETP Holder[, Equity ASAP Holder, or ETP Firm] within the last year should be set forth. Longer periods of years may be covered if they are consecutive and include the most recent year. The material must name each security recommended, the date and nature of recommendation (buy or sell), the price at the time, the price range within which to act upon, and if the period was one of generally rising or falling markets;

(7) Material that makes no recommendations, but offers to furnish a list of all recommendations made by an ETP Holder[, Equity ASAP Holder, or ETP Firm] within the past year or over a longer period of consecutive years shall contain same information as stated in item (6) above.

(b)–(d)—No change.

(e) Claims for research:

No claim or implication may be made for research or other facilities beyond those which the ETP Holder[, Equity ASAP Holder, or ETP Firm] actually posses or has reasonable capacity to provide.

(f)–(g)—No change.

Registration of Options Principals

Rule 9.26. No ETP Holder[, Equity ASAP Holder, or ETP Firm] shall transact any business with the public in option contracts unless those persons engaged in the management of the ETP [Holder, Equity ASAP Holder, or ETP Firm's] *Holder's* business pertaining to option contracts are registered with and approved by the Corporation as Options Principals. No individual ETP Holder [or Equity ASAP Holder] shall transact any business directly with the public in option contracts unless he *or she* is registered with and approved by the Corporation as an Options Principal. In connection with their registration, Options Principals shall file an application with the Corporation on a form prescribed by the Corporation and shall be required to successfully complete an examination prescribed by the Corporation for the purpose of demonstrating an adequate knowledge of options trading generally, the Rules of the Corporation applicable to trading of option contracts and theRules of the Options Clearing Corporation. In the event the employment of any Registered Options Principal is terminated or any Registered Options Principal ceases to act in such capacity, such fact shall be reported promptly to the Corporation together with a brief statement of the reason therefore.

Commentary

.01 Each ETP Holder[, Equity ASAP Holder, or ETP Firm] shall be required to designate a Registered Options Principal who is a general partner or officer as the person responsible for overall supervision and training in areas relating to transactions in option contracts.

.02—No change.

Registration of Representatives

Rule 9.27(a). *General.* No ETP Holder[, Equity ASAP Holder, or ETP Firm] shall be approved to transact business with the public until those persons associated with it who are designated as Representatives have been registered with and approved by the Corporation pursuant to the provisions of Rule [2.23(a)] *2.21(a)* through Rule [2.23(d)] *2.21(d).* Persons who perform duties for the ETP Holder[, Equity ASAP Holder, or ETP Firm] which are customarily performed by sales representatives, solicitors, customers' men or branch office managers shall be designated as Representatives.

(b) *Registered Options Representatives.* No person associated with an ETP Holder[, Equity ASAP Holder, or ETP Firm] shall transact any business with the public in option contracts, unless those persons are registered with and approved by the Corporation pursuant to the provisions of paragraph (a) of this Section and are registered with and approved by the Corporation as Options Representatives. In connection with their registration as Options Representatives, such persons shall file an application with the Corporation on a form prescribed by the Corporation, shall successfully complete a training course and an examination for the purpose of demonstrating adequate knowledge in the trading of option contracts, and shall sign an agreement to abide by the Bylaws, Rules and procedures of the Corporation and the Rules of the Options Clearing Corporation; provided, however, that representatives of an ETP Holder[, Equity ASAP Holder, or ETP Firm] which is a member of another national securities exchange or association which has standards of approval acceptable to the Corporation may be deemed to be registered with and approved by the Corporation, so long as such representatives are registered with and approved by the Corporation, so long as such representatives are registered with and approved by such other exchange or association. An ETP Holder[, Equity ASAP Holder, or ETP Firm] whose representatives are deemed registered and approved pursuant to the last clause of the preceding sentence shall inform their representatives of their obligation to adhere to the Bylaws, Rules and procedures of the Corporation and the Rules of the Options Clearing

Corporation. Termination of employment or affiliation of any Registered Options Representative in such capacity shall be reported promptly to the Corporation together with a brief statement of the reason for such termination, pursuant to Rule [2.23(h)] *2.21(h).*

Commentary

.01–.03—No change.

Regulatory Element

Rule 9.27(c). No ETP Holder[, Equity ASAP Holder or ETP Firm] shall permit any registered person to continue to, and no registered person shall continue to, perform duties as a registered person, unless such person has complied with the continuing education requirements of this Rule 9.27(c).

Each registered person shall complete the Regulatory element of the continuing education program on three occasions, after the occurrence of their second, fifth and tenth registration anniversary dates, or as otherwise prescribed by the Corporation. On each of these three occasions, the Regulatory Element must be completed within one hundred twenty (120) days after the person's registration anniversary date. The content of the Regulatory Element of the program shall be prescribed by the Corporation.

(1) Registered person who have been continuously registered for more than ten years as of the effective date of this Rule shall be exempt from participation in the Regulatory Element of the continuing education program, provided such persons have not been subject to any disciplinary action within the last ten (10) years as enumerated in subsection [(c)(3)(i)–(ii)]*(c)(3)(A)–(B)* of this Rule. Persons who have been currently registered for ten (10) years or less as of the effective date of this Rule shall initially participate in the Regulatory Element of the continuing education program within one hundred twenty days (120) after the occurrence of the second, fifth or tenth registration anniversary date, whichever anniversary date first applies, and on the applicable registered anniversary date(s) thereafter. Such persons will have satisfied the requirements of the Regulatory Element of the program after participation on the tenth registration anniversary.

All registered persons who have satisfied the requirements of the Regulatory Element shall be exempt from further participation in the Regulatory Element of the program, subject to re-entry into the program as set forth in subsection (c)(3) of this Rule.

(2)–(3)—No change.

Re-entry shall commence with the initial participation within 120 days of the registered person becoming subject to the statutory disqualification, in the case of [(i)] *(A)* above, or the disciplinary action becoming final, in the case of [(ii) *(B)* or [(iii)] *(C)* above, and on three additional occasions thereafter, at intervals of two, five and ten years after re-entry, notwithstanding that such person has completed all or part of the program requirements based on length of time as a registered person or completion of ten years of participation in the program.

(d) Firm Element

(1) Persons Subject to the Firm Element—The requirements of this Rule 9.27(d) shall apply to any registered person who has direct contact with customers in the conduct of the ETP [Holder, Equity ASAP Holder or ETP Firm's] *Holder's* securities sales, trading or investment banking activities, and to the immediate supervisors of such persons (collectively, ''covered registered persons'').

(2) Standards.

(A) Each ETP Holder[, Equity ASAP Holder or ETP Firm] must maintain a continuing and current education program for its covered registered person to enhance their securities knowledge, skills and professionalism. At a minimum, each ETP Holder[, Equity ASAP Holder or ETP Firm] shall at least annually evaluate and prioritize its training needs and develop a written training plan. The plan must take into consideration the ETP [Holder, Equity ASAP Holder or ETP Firm's] *Holder's* size, organizational structure, and scope of business activities, as well as regulatory developments and the performance of covered registered persons in the Regulatory Element.

(B) Minimum Standards for Training Programs—Programs used to implement an ETP [Holder, Equity ASAP Holder or ETP Firm's] *Holder's* training plan must be appropriate for the business of the ETP Holder[, Equity ASAP Holder or ETP Firm] and, at a minimum, must cover the following matters concerning securities products, services and strategies offered by the ETP Holder[, Equity ASAP Holder or ETP Firm]:

(i)–(iii)—No change.

(C) Administration of Continuing Education Program—Each ETP Holder[, Equity ASAP Holder or ETP Firm] must administer its continuing education program in accordance with its annual evaluation and written plan and must maintain records documenting the content of the programs and completion of the programs by covered registered persons.

(3) Participation in the Firm Element—Covered registered persons included in an ETP [Holder, Equity ASAP Holder or ETP Firm's] *Holder's* plan must take all appropriate and reasonable steps to participate in continuing education programs as required by the ETP Holder[, Equity ASAP Holder or ETP Firm].

(4) Specific Training Requirements—The Corporation may require an ETP Holder[, Equity ASAP Holder or ETP Firm,] either individually or as part of a larger group, to provide specific training to its covered registered persons in such areas that the Corporation deems appropriate. Such a requirement may stipulate the class of covered registered persons for which it is applicable, the time period in which the requirement must be satisfied and, where appropriate, the actual training content.

Commentary

.01 For purposes of this Rule, the term ''registered person'' means any ETP Holder, [Equity ASAP Holder or ETP Firm,] Allied Person thereof, registered representative or other person registered or required to be registered under the Rules of the Corporation, but does not include any such person whose activities are limited solely to the transaction of business on the facilities of the Corporation with ETP Holders[, Equity ASAP Holders, ETP Firms] or registered broker-dealers.

.02 For purposes of this Rule, the term ''customer'' means any natural person or any organization, other than a registered broker or dealer, executing transactions in securities or other similar instruments with or through, or receiving investment banking services from, an ETP Holder[, Equity ASAP Holder or ETP Firm].

.03 A registered person who has been continuously registered for more than ten (10) years as of the date of implementation of this Rule who has been subject to a disciplinary action as enumerated in subsections [(c)(3)(i)–(ii)] *(c)(3)(A)–(B)* of the Rule within the last ten years, will be required to satisfy the requirements of the Regulatory Element of the continuing education program by participation for the period from the date of implementation of this Rule to ten years after the occurrence of the disciplinary action.

.04–.05—No change.

Advertisements, Market Letters and Sales Literature Relating to Options

Rule 9.28(a). General Rule. No ETP Holder[, Equity ASAP Holder or ETP Firm] or person associated therewith shall utilize any advertisement, educational material, sales literature or other communications to any customer or member of the public concerning options which:

(1)–(4)—No change.

(b) Approval by Compliance Registered Option Principal. All advertisements, sales literature (except completed worksheets), and educational material issued by an ETP Holder[, Equity ASAP Holder or ETP Firm] pertaining to options shall be approved in advance by the Compliance Registered Options Principal or designee. Copies thereof, together with the names of the persons who prepared the material, the names of the persons who approved the material and, in the case of sales literature, the source of any recommendations contained therein, shall be retained by the ETP Holder[, Equity ASAP Holder or ETP Firm] and be kept at an easily accessible place for examination by the Corporation for a period of three years.

(c) Approval Required for Options Advertisements. In addition to the approval required by paragraph (b) of this Rule, every advertisement of an ETP Holder[, Equity ASAP Holder or ETP Firm] pertaining to options shall be submitted to the Corporation at least ten days prior to use (or such shorter period as the Corporation may allow in particular instances) for approval and, if changed or expressly disapproved by the Corporation, shall be withheld from circulation until any changes specified by the Corporation have been made or, in the event of disapproval, until the advertisement has been resubmitted for, and has received, Corporation approval. The requirements of this paragraph shall not be applicable to:

(1)—No change.

(2) advertisements in which the only reference to options is contained in a listing of the services of an ETP Holder[, Equity ASAP Holder or ETP Firm].

(d)–(e)—No change.

Commentary

.01 The special risks attendant to options transactions and the complexities of certain options investment strategies shall be reflected in any advertisement, educational material or sales literature which discusses the uses or advantages of options. Such communications shall include a warning to the effect that options are not suitable for all investors. In the preparation of written communications respecting options, the following guidelines should be observed:

A. Any statement referring to the potential opportunities or advantages presented by options shall be balanced by a statement of the corresponding risks. The risk statement shall reflect the same degree of specificity as the statement of opportunities, and broad generalities should be avoided. Thus, a statement such as ''with options, an investor has an opportunity to earn profits while limiting his *or her* risk of loss'', should be balanced by a statement such as ''of course, an options investor may lose the entire amount committed to options in a relatively short period of time.''

B.–C.—No change.

.02—No change.

.03 Written communications (other than advertisements) pertaining to options shall conform to the following standards:

A.–D.—No change.

E. Options worksheets utilized by ETP Holders, [Equity ASAP Holders or ETP Firms,] or associated persons must comply with the requirements applicable to sales literature.

F.—No change.

**Rule 10**

**Disciplinary Proceedings, Other Hearings, and Appeals**

Disciplinary Jurisdiction

Rule 10.1.

(a) An ETP Holder[, ETP Firm, Equity ASAP Holder,] or associated person of an ETP [Firm or Equity ASAP] Holder who is alleged to have violated or aided and abetted a violation of any provision of the Securities Exchange Act of 1934, as amended, the rules and regulations promulgated thereunder, any provision of the Corporation's Bylaws or Rules or any commentary thereof, any resolution of the Board of Directors of the Corporation regulating the conduct of business of the Corporation, or any policy or procedure of the Corporation shall be subject to the disciplinary jurisdiction of the Corporation under this Rule, and after notice and opportunity for a hearing may be appropriately disciplined by cancellation of trading privileges, suspension, limitation of activities, functions, and operations, suspension or bar from association with an ETP [Firm or Equity ASAP] Holder, fine, censure or any other fitting sanction, in accordance with the provisions of this Rule. An ETP [Firm or Equity ASAP] Holder may be charged with any violation committed by its employees or [its ETP Holder or] other person who is associated with such ETP [Firm or Equity ASAP] Holder, as though such violation were its own.

(b) Any ETP Holder, [ETP Firm, Equity ASAP Holder,] or associated person of an ETP [Firm or Equity ASAP] Holder shall continue to be subject to the disciplinary jurisdiction of the Corporation following suspension or cancellation of ETP [or Equity ASAP] trading privileges or termination of association with an ETP [Firm or Equity ASAP] Holder with respect to matters that occurred prior to such termination, provided that written notice of the commencement of an inquiry into such matters is given by the Corporation to such former ETP Holder[, ETP Firm, Equity ASAP Holder,] or associated person of an ETP [Firm or Equity ASAP] Holder within one year of receipt by the Corporation of written notice of the termination of such person's status as an ETP Holder[, ETP Firm, Equity ASAP Holder,] or associated person of an ETP [Firm or Equity ASAP] Holder.

Investigations and Regulatory Cooperation

Rule 10.2(a). The Corporation's Chief Regulatory Officer and his or her delegees will function independently of the commercial interest of the Corporation and the commercial interests of the ETP Holders[, ETP Firms and Equity ASAP Holders] and the Chief Regulatory Officer or his or her delegees will have the discretion to investigate, and will investigate, possible violations within the disciplinary jurisdiction of the Corporation. The Regulatory Staff may consult as necessary with the PCX Parent Regulatory Staff. No member of the Board of Directors or non-Regulatory Staff may interfere with or attempt to influence the process or resolution of any pending investigation or disciplinary proceeding.

(b)—No change.

(c) An ETP Holder[, ETP Firm, Equity ASAP Holder,] or associated person of an ETP Firm or Equity ASAP Holder is entitled to be represented by counsel during any investigation by the Corporation.

(d) No ETP Holder, [ETP Firm, Equity ASAP Holder,] associated person of an ETP [Firm or Equity ASAP] Holder, or other person or entity over whom the Corporation has jurisdiction pursuant to Rule 10.1 may impede or delay a regulatory investigation with respect to possible violations within the disciplinary jurisdiction of the Corporation nor refuse to furnish testimony, documentary materials or other information requested by the Corporation during the course of its investigation. Failure to furnish such testimony, documentary materials, or other information requested by the Corporation pursuant to this Rule on the date or within the time period required by the Corporation will be considered obstructive of an inquiry or investigation and subject to formal disciplinary action.

(e) An ETP Holder[, ETP Firm, Equity ASAP Holder,] or associated person of an ETP [Firm or Equity ASAP] Holder must submit such trade data elements specified in Commentary .01 below in such automated format as may be prescribed by the Corporation from time to time, in regard to such transactions or transactions as may be the subject of a particular request for information made by the Corporation. Failure to submit such data in the required format will be considered obstructive of an inquiry or investigation and subject to formal disciplinary action.

Commentary

.01(A) If the transaction [was] *were* a proprietary transaction effected or caused to be effected by the ETP Holder[, ETP Firm or Equity ASAP Holder] for any account in which such ETP [Holder, ETP Firm, Equity ASAP] Holder or associated person of an ETP [Firm or Equity ASAP] Holder is directly or indirectly interested, such ETP [Holder, ETP Firm, or Equity ASAP] Holder shall submit or cause to be submitted the following information:

(i) Clearing house number(s), or alpha symbol(s), as used by the ETP Holder[, ETP Firm, or Equity ASAP Holder] submitting the data;

(ii) Clearing house number(s), or alpha symbol(s) as may be used from time to time, of the ETP Holder(s)[, ETP Firm(s), or Equity ASAP Holder(s)] on the opposite side of the transaction;

(iii)–(viii)—No change.

(B) If the transaction [was] *were* effected or caused to be effected by the ETP [Holder, ETP Firm, or Equity ASAP] Holder for any customer account, such ETP [Holder, ETP Firm, or Equity ASAP] Holder shall submit or cause to be submitted the following information:

(i)–(ii)—No change.

(iii) If the transaction [was] *were* effected for a customer of a broker-dealer, whether the broker-dealer was acting as principal or agent on the transaction that is the subject of the Corporation's request.

(C) In addition to the above trade data elements, an ETP [Holder, ETP Firm, or Equity ASAP] Holder shall submit such other information in such automated format as may be prescribed by the Corporation, as may from time to time be required.

(D)—No change.

(f) No ETP Holder, [ETP Firm, Equity ASAP Holder,] associated person of an ETP [Firm or Equity ASAP] Holder, or other person or entity over whom the Corporation has jurisdiction pursuant to Rule 10.1 may refuse to appear and testify before another exchange or self-regulatory organization in connection with a regulatory investigation, examination, or disciplinary proceeding or refuse to furnish documentary materials or other information or otherwise impede or delay such investigation, examination or disciplinary proceeding if the Corporation requests such information or testimony in connection with any inquiry resulting from an agreement entered into by the Corporation or its self-regulatory organization. The requirements of this Rule 10.2(f) will apply regardless of whether the Corporation has initiated an investigation pursuant to Rule 10.2(a) or a disciplinary proceeding pursuant to Rule 10.4.

Commentary

.01–.02—No change.

Ex Parte Communications

Rule 10.3(a). Prohibited Communications. Unless on adequate notice and reasonable opportunity for all parties to participate:

(1) No person who is a subject of a pending investigation by the Corporation (''Subject'')

or a Respondent in a pending disciplinary proceeding, or counsel for a representative of the Subject or the Respondent, or any interested Corporation staff, with knowledge of a pending investigation or disciplinary proceeding, may make or knowingly cause to be made an ex parte communication, as defined below, relevant to the facts or allegations of the investigation or the disciplinary proceeding to: (a) a member of the Board of Directors; (b) a person who advises the Board of Directors; (c) any member of the Corporation's Regulatory Staff that is not participating in the resolution of the investigation or the disciplinary proceeding; (d) a member of the Business Conduct Committee or Board Appeals Committee; or (e) a member of the PCX Board of Governors.

(2) No person who is a member of the Business Conduct Committee or Conduct Panel with knowledge of a pending investigation or disciplinary proceeding, or *any* interested Corporation staff, may make or knowingly cause to be made an ex parte communication, as defined below, relevant to the facts or allegations of the investigation or the disciplinary proceeding to: (a) a member of the Board of Directors; (b) a person who advises the Board of Directors; (c) any member of the Corporation's Regulatory Staff; (d) the Subject of a pending investigation by the Corporation or a Respondent in a pending disciplinary proceeding, or counsel for or a representative of the Subject or the Respondent; or (e) a member of the PCX Board of Governors.

(3) No person who is a member of the Board of Directors, or any person who advises the Board of Directors, or any interested Corporation staff, with knowledge of a pending investigation or disciplinary proceeding, may knowingly make or cause to be made an ex parte communication, as defined below, relevant to the facts or allegations of the investigation or the disciplinary proceeding to: (a) any member of the Corporation's Regulatory Staff; (b) the Subject to a pending investigation by the Corporation or a Respondent in a pending disciplinary proceeding, or counsel for or a representative of the Subject or the Respondent; (c) a member of the Business Conduct Committee; or (d) a member of the PCX Parent Board of Governors.

(b) Disclosure of Prohibited Communications. Any person who receives, makes or knowingly causes to be made a communication prohibited by this Rule must promptly submit to the Regulatory Staff for inclusion in the record of the investigation or disciplinary proceeding:

(1) all such written communications;

(2) memoranda stating the substance of all such oral communications; and

(3) all written responses and memoranda stating the substance of any oral responses to such communications.

(c) Remedies. Any ETP Holder, [ETP Firm, Equity ASAP Holder,] or associated person of an ETP [Firm or Equity ASAP] Holder who made or knowingly caused to be made [a] *an ex parte* communication prohibited by subsection (a) will be subject to disciplinary action. Furthermore, the Business Conduct Committee, to the extent consistent with the interests of justice, may issue to the ETP Holder, [ETP Firm, Equity ASAP Holder,] or associated person of an ETP [Firm or Equity ASAP] Holder, or interested Corporation staff, responsible for the communication or who benefited from the communication an order to show cause why the claim, defense or interest of the ETP Holder, [ETP Firm, Equity ASAP Holders,] or associated person of an ETP [Firm or Equity ASAP] Holder, or interested Corporation staff, should not be adversely affected by reason of such ex parte communication, including but not limited to the entry of an adverse summary decision. All parties to a disciplinary proceeding and the Regulatory Staff will be provided with adequate notice and a reasonable opportunity to respond to any allegations or contentions contained in the prohibited communication and any responses will be included in the record of the investigation or disciplinary proceeding.

(d) Permitted Communications. Nothing in this Rule prohibits the members of a disciplinary committee or the Regulatory Staff from discussing a pending investigation or disciplinary proceeding at a meeting of the committee in connection with: (1) the adjudication of the investigation pursuant to the Minor Rule Plan; (2) the determination of whether to impose informal discipline; (3) the determination of whether to authorize a complaint or take no further action; or (4) the determination of whether to accept an offer of settlement.

(e) No member of the Business Conduct Committee or Conduct Panel*, as defined in Rule 10.5(a),* may participate in a matter governed by Rule 10.3(c) as to which that person has a conflict of interest or bias, or if circumstances otherwise exist where his or her fairness might reasonably be questioned. In such a case, the person shall recuse himself or *herself or* shall be disqualified as follows:

(1) The Chief Regulatory Officer shall have the authority to direct the disqualification of the interested member of the Business Conduct committee or Conduct Panel.

(2) The Chief Executive Officer shall have the authority to direct the disqualification of the Chief Regulatory Officer.

Commentary

.01 ''Ex parte communication'' means an oral or written communication made without notice to all parties, i.e., the Corporation's Regulatory Staff and the Subjects of investigations or Respondents in disciplinary proceedings. A written communication is ex parte unless a copy has been previously or simultaneously delivered to all interested parties. An oral communication is ex parte unless it is made in the presence of all interested parties except those who, on adequate prior notice, declined to be present.

.02 A disciplinary proceeding will be considered to be pending from the date that a Complaint has been issued pursuant to Rule 10.4 until the proceeding, including any appeals, becomes final.

Complaints

Rule 10.4(a). The Chief Regulatory Officer and his or her delegee(s) have the authority to determine whether there is probable cause for finding that a violation within the disciplinary jurisdiction of the Corporation has occurred and if further proceedings are warranted. If the Regulatory Staff, on behalf of the Corporation, (''the Complainant'' ) determines that further proceedings are warranted, [the] *then* the Corporation will initiate a formal disciplinary action by preparing a statement of charges (''the Complaint'') against any ETP Holder, [ETP Firm, Equity ASAP Holder,] or associated person of an ETP [Firm or Equity ASAP] Holder alleged to have committed a violation (''the Respondent'') specifying the acts in which the Respondent is alleged to have engaged in, or which the Respondent is alleged to have omitted, and alleging the specific provisions of the Bylaws, Rules, policies or procedures of the Corporation, or the rules, regulations and procedures promulgated under the Securities Exchange Act of 1934, of which such acts or omissions are alleged to be in violation.

(b)–(c)—No change.

Commentary

.01—No change.

Hearing

Rule 10.5

(a)–(c)—No change.

(d) At the hearing, both the Complainant and the Respondent shall be entitled to be heard in person and to present any relevant matter. Any witnesses, testimony or evidence offered by the Complainant or the Respondent shall be subject to cross-examination by the other party. The Conduct Panel shall determine all questions concerning the admissibility of evidence and shall otherwise regulate the conduct of the hearing. Formal rules of evidence shall not apply. The charges shall be presented by the Corporation, who along with Respondent and any other party, may present evidence and produce witnesses who shall testify under oath and are subject to being questioned by the Conduct Panel and other parties. The Conduct Panel, upon its own motion or the motion of the Complainant or Respondent, may request the production of documentary materials and witnesses. No ETP Holder, [ETP Firm, Equity ASAP Holder,] or associated person of an ETP [Firm or Equity ASAP] Holder shall refuse to furnish relevant testimony, documentary materials or other information requested by the Conduct Panel during the course of the hearing. The Respondent and intervening parties are entitled to be represented by counsel who may participate fully in the hearing. A transcript of the hearing shall be made and shall become part of the record.

(e)—No change.

Rule 10.6–10.7—No change.

Review

Rule 10.8(a)—No change.

(b) The Board Appeals Committee may appoint a Board Appeals Committee Panel (''Appeals Panel'') to conduct reviews of disciplinary proceedings, or may decide to conduct review proceedings on its own. The composition of the Appeals Panel will be determined by the Board Appeals Committee in accordance with Rule 3.3. The body conducting the review, either the Board Appeals Committee itself or the Appeals

Panel, is referred to herein as ''the Review Board.'' Unless the Review Board shall decide to open the record for the introduction of new evidence or to hear argument, such review shall be based solely upon the record and the written exceptions filed by the parties. The standard of review shall be de novo. Based upon such review, the Review Board may affirm, reverse or modify in whole or in part, the decision of the Conduct Panel. Such modification may include an increase or decrease of the sanction. The decision of the Review Board shall be in writing and, shall become fifteen (15) calendar days after notifying the parties; provided, however, that if a request for review of such determination is filed pursuant to Rule 10.8(c) or Rule 10.8(d) below, the penalty shall be stayed pending the outcome of that review.

Each Review Board member shall be required to disclose to the Board Appeals Committee any circumstances which might preclude such Review Board member from rendering an objective and impartial determination. Prior to the commencement of the first hearing session, the Board Appeals Committee may remove a Review Board member who discloses such information. The Board Appeals Committee shall also inform the parties of any information disclosed pursuant to this section, if the Review Board member who disclosed the information is not removed.

In the event that any Review Board member, after the commencement of the Review, but prior to the rendition of the decision, should become disqualified, resign, die, refuse or be unable to perform or discharge his *or her* duties, the Board Appeals Committee, upon such proof as they deem satisfactory, shall either (a) appoint a new member to the Review Board to replace such member; or (b) direct that the review proceed without the substitution of a new member.

(c)–(e)—No change.

Judgment and Penalty

Rule 10.9(a). An ETP Holder, [ETP Firm, Equity ASAP Holder,] or associated person of an ETP [Firm or Equity ASAP] Holder shall be subject to appropriate discipline by the Corporation for violations under this Rule including: cancellation or suspension of trading privileges, limitation of activities, functions and operations, suspension or bar from association with an ETP Holder, [ETP Firm or Equity ASAP Holder,] fine, censure, or any other fitting sanction.

(b)–(c)—No change.

Miscellaneous Provisions

Rule 10.10—No change.

Appeal of [Floor Citations and] Minor Rule Plan Sanctions

Rule 10.11(a). This Section provides the following procedures for persons aggrieved by action taken by the Corporation pursuant to the provisions of the Bylaws and Rules of the Corporation for which action an ETP Holder, [ETP Firm, Equity ASAP Holder,] or associated person of an ETP [Firm or Equity ASAP] Holder has been sanctioned [via floor citation or] pursuant to Rule 10.12 (the Minor Rule Plan), and applies for an opportunity to make an oral presentation or to have the matter reviewed on the papers alone. (This Section shall not apply to disciplinary action taken pursuant to Rule 10.4 herein, non-disciplinary action taken pursuant to Rule [10.14] *10.13* herein, or to an action in Arbitration.)

(b) Submission of Application to Corporation. Any ETP Holder, [ETP Firm, Equity ASAP Holder,] or associated person of an ETP [Firm or Equity ASAP] Holder who is aggrieved by any action of the Corporation within the scope of this Section and who desires the opportunity to make an oral presentation with respect to such action or to have such action reviewed on the papers alone shall file a written application with the Business Conduct Committee within five (5) business days after notification that such action has been taken. The notification submitted by the Corporation shall state the specific grounds for the action taken by the Corporation, and shall notify the party of the party's right to make an oral presentation or to have the matter reviewed on the papers alone. The application shall contain: (1) An identification of the Corporation action over which the review is being requested; (2) the reason(s) why the applicant disagrees with such action; and (3) the relief sought. In addition, the application shall indicate whether the applicant desires to make an oral presentation, in which event it shall be considered a ''request for a hearing,'' or to proceed only upon the existing and/or any additional documents or materials, in which event it shall be considered a ''request for a review on the papers.'' Hereinafter, the terms ''hearing'' and ''review on the papers'' shall be referred to jointly as the ''Proceeding(s).''

(c)—No change.

(d) Procedure Following Application for Hearing and/or Review on the Papers.

(1)–(2)—No change.

(3) Conduct of the Proceeding. Whether the Proceeding is a hearing or a review on the papers alone, the Conduct Panel shall determine all questions concerning the admissibility of evidence and shall otherwise regulate the conduct of the Proceeding. The formal rules of evidence shall not apply. In the event of a hearing, each of the parties shall be permitted to make an opening statement, present witnesses pursuant to paragraph (d)(2), present documentary evidence, cross-examine witnesses and present closing arguments. The Conduct Panel shall have the right to question all parties and witnesses to the Proceeding. The Conduct Panel may also request the production of documentary evidence and witnesses. No ETP Holder, [ETP Firm, Equity ASAP Holder,] or associated person of an ETP [Firm or Equity ASAP] Holder shall refuse to furnish relevant testimony, documentary materials or other information requested by the Conduct Panel during the course of the Proceeding. All parties are entitled to be represented by counsel who may participate fully in the Proceeding. In the event of a hearing, a transcript of the hearing shall be made and shall become part of the record.

(4)—No change.

(5) If after a hearing or review on the papers pursuant to subsection (d) of this Rule, the Conduct Panel determines that an ETP Holder, [ETP Firm, Equity ASAP Holder,] or associated person of a ETP [Firm or Equity ASAP] Holder has violated one or more rules of the Corporation, as alleged, the Conduct Panel: (i) may impost any one or more of the disciplinary sanctions authorized by the Corporation's Bylaws and Rules; and (ii) shall impose a forum fee against the person charged in the amount of two hundred fifty dollars ($250) if the determination was reached based on a review of the papers, or in the amount of five hundred dollars ($500) if a hearing was conducted. However, notwithstanding the foregoing, in the event that the Conduct Panel determines that the ETP Holder, [ETP Firm, Equity ASAP Holder,] or associated person of an ETP [Firm or Equity ASAP] Holder has violated one or more Rules of the Corporation, as alleged, and the sole disciplinary sanction imposed by the Conduct Panel for such rule violation(s) is a fine which is less than the total fine initially imposed by the Regulatory Staff for the subject violation(s), the Conduct Panel shall have the discretion to waive the imposition of a forum fee.

(6)—No change.

(e)–(f)—No change.

Minor Rule Plan

Rule 10.12.

(a) In lieu of initiating a formal disciplinary action or proceeding, the Corporation may, subject to the requirements set forth in this Rule, impose a fine not to exceed five thousand dollars ($5,000) on any ETP Holder[, ETP Firm, Equity ASAP Holder,] or associated person of an ETP [Firm or Equity ASAP] Holder, for any violation of a Rule of the Corporation that has been determined to be minor in nature.

(b) Whenever it appears that an ETP Holder, [ETP Firm, Equity ASAP Holder,] or associated person of an ETP [Firm or Equity ASAP] Holder has violated a [rule] *Rule* under this Minor Rule Plan, the Corporation shall serve on such person or organization a written statement setting forth (i) the Rule(s) alleged to have been violated; (ii) the act or omission constituting each such violation; and (iii) notice that such person or organization may submit a written statement to a designated committee for its consideration.

(c)–(e)—No change.

(f) Nothing in this Rule shall require the Corporation to impose a fine for a violation of any [rule] *Rule* under this Minor Rule Plan. If the Corporation determines that any violation is not minor in nature, the Corporation may, at its discretion, proceed under Rule 10.4 rather than under this Rule.

[(g) Floor Citations. A Trading Official may issue a Floor Citation to any ETP Holder, ETP Firm, or associated person of an ETP Firm, when it appears to such Official(s) that a Minor Rule Plan violation specified in subsection (h) or (i) of this Rule has occurred. In issuing a Floor Citation, the Trading Official shall:

(1) Apprise the person cited of the alleged violation;

(2) Ask the person cited to indicate by signature on the citation acknowledgement of receipt of the citation; provided that the

requested signature is for receipt purposes only and a failure or unwillingness to sign is not to be considered as invalidating the issuance of the citation;

(3) Give the top copy of the citation to the person alleged to have committed the violation; and

(4) Give the remaining copies of the citation to the appropriate staff person, who will then forward such copies of the Regulatory Staff for processing.]

[Except as provided in Rule 10.13 (the Summary Sanction Procedure), the] *The* circumstances underlying the issuance of each [floor] citation shall be reviewed by the Business Conduct Committee for a determination of whether the evidence is sufficient to find a violation of any Rules of the Corporation.

[(h)] *(g)* Minor Rule Plan: [Floor Decorum and] Minor Trading Rule Violations.

[(1)–(8)—Deleted.]

[(9)] *(1)* Short Sale Rules. (Rule [7.40] *7.16)*

[(10) Dissemination of Quotations in Local Issues. (EFPA 2–B)]

[(11)] *(2)* Failure to follow the provisions of the rules and regulations governing the use of the Intermarket Trading System (''ITS''). (Rules [7.67–7.69)] *7.55–7.57)*

[(12) failure to Clear the Post Properly. (EFPA 1–B)]

[(i)] *(h)* Minor Rule Plan: Record Keeping and Other Minor rule Violations.

(1)–(3)—No change.

(4) Failure to notify the Corporation of any change of address where notices may be served. (Rule [2.18(b))] *2.16(b)*)

(5)–(6)—No change.

[(j)] *(i)* Minor Rule Plan: Recommended Fine Schedule.

| | Fines | | |
|---|---|---|---|
| | 1st violation | 2nd violation | 3rd violation |
| (1) [Floor Decorum and] Minor Trading Rule Violations [1] | | | |
| [1.–.8—Deleted.] | | | |
| [9] *1.* Short Sale Rules. (Rule [7.40)] *7.16*) | $500.00 | $1,000.00 | $2,500.00 |
| [10. Dissemination of Quotations in Local Issues (EFPA 2–B))] | ..... | ..... | $100.00 |
| [11] *2.* Failure to follow the provisions of *the rules* and regulations governing the use of the Intermarket Trading System (''ITS''). (Rules *7.55–7.57)* [7.67–7.69)] | $500.00 | $1,000.00 | $2,000.00 |
| [12. Failure to Clear the Post Properly. (EFPA 1–B)) | Official Warning] | $250.00 | $500.00 |
| (2) Record Keeping and Other Minor Rule | | | |
| 1. Failure to submit trade data to the [Exchange] *Corporation* in a timely manner. (Rule 10.2(e)) | $250.00 | $500.00 | $750.00 |
| 2. Failure to file a Securities Investor Protection Corporation form and assessment in a timely manner. (Rule 4.11(b)) | $500.00 | $1,000.00 | $1,500.00 |
| 3. Failure to furnish in a timely manner [books,] records or other requested information or testimony in connection with an examination of financial responsibility and/or operational conditions. (Rule 4.11(c)) | $250.00 | $500.00 | $750.00 |
| 4. Failure to notify the Corporation of a change of address where notices may be served. (Rule [2.18(b))] *2.16(b)*) | $250.00 | $500.00 | $750.00 |
| 5. Failure to file a financial report or financial information in the type, form, manner and time prescribed by the [Exchange] *Corporation.* (Rule 4.11(a)) | $250.00 | $500.00 | $750.00 |
| 6. Delaying, impeding or failing to cooperate in [an Exchange] *a Corporation* investigation. (Rule 10.2(d)) | $500.00 | $1,000.00 | $2,000.00 |

[1] Fines for multiple violations of [Equity Floor Decorums and] Minor Trading Rules are calculated on a running two-year basis, except that violations denoted with an asterisk are calculated on a running one-year basis.

[Summary Sanction Procedure]

[Rule 10.13—Deleted.]

Hearings and Review of Decisions by the Corporation

Rule [10.14] *10.13.*

(a) General Provisions. This Rule provides the procedure for persons aggrieved by any of the following actions taken by the Corporation to apply for an opportunity to be heard and to have the action reviewed. These actions are:

(1) the denial of an ETP [or Equity ASAP];

(2) the barring of any person from becoming associated with an ETP [Firm or Equity ASAP] Holder;

(3) the suspension or cancellation of ETP trading privileges [or Equity ASAP trading privileges];

(4) the prohibition or limitation with respect to access to services provided by the Corporation, or the access to services of any ETP [Firm or Equity ASAP] Holder taken pursuant to the Bylaws, or Rules or procedures of the Corporation; or

*(5) actions taken by the Corporation pursuant to Rule 7.22, including the denial of the application for, or the termination or suspension of, a Market Maker's registration in a security or securities;*

[(5)] (*6*) actions taken *by the Corporation* pursuant to [rule 7.22] *Rule 7.23* [and 7.29];

[(6)] *(7) actions taken by the Corporation pursuant to Rule 7.25, including the denial of the application for, or the termination or suspension of, an Odd Lot Dealer's registration in a security or securities.* [denial of an applicant specialist for the appointment as a registered specialist].

The provisions of this Rule shall not apply to reviews of the following:

(A)–(C)—No change.

For purposes of this Section, a person must be ''aggrieved'' in an economic sense.

(b)—No change.

(c) Extension of Time. An application not filed within the time specified in Rule [10.14(b)] *10.13(b)* shall not be considered by the Board Appeals Committee, unless an extension of time is allowed by the Board Appeals Committee upon a showing of good cause. In order to obtain an extension of time within which to file an appeal, the applicant must, within the time specified in Rule [10.14(b)] *10.13(b)* file with the Secretary of the Corporation a request for an extension of time within which to submit the application. The request for extension will be ruled upon by the Board Appeals Committee, whose ruling will be given in writing. Rulings on requests for extension of time are not subject to appeal under Rule 10.

(d)–(m)—No change.

Miscellaneous Provision

Rule [10.15] *10.14.*—No change.

**Rule 11**

**Cancellation, Suspension and Reinstatement**

Notice of Expulsion or Suspension

Rule 11.1(a) An ETP Holder[, ETP Firm, or Equity ASAP Holder] which is expelled or suspended from any self-regulatory organization, encounters financial difficulty or operating inadequacies, fails to perform contracts, or become insolvent shall give prompt written notification to the Corporation of any such occurrence.

(b) An ETP [Firm or Equity ASAP] Holder shall give prompt written notification to the Corporation with respect to the expulsion or suspension of any [nominee or any other] associated person of such ETP [Firm or Equity ASAP] Holder by any self-regulatory organization.

Procedures for Suspension

Rule 11.2(a) This Rule sets forth the procedures for certain suspensions, cancellations, bars, limitations and

prohibitions on access to the Corporation's services.

(1) Summary Suspension. In accordance with Section 6(d)(3) of the Exchange Act, the Board of Directors of the Corporation or a committee thereof may summarily:

(i) suspend the trading privileges of an ETP Holder, [ETP Firm, Equity ASAP Holder,] or associated person of an ETP [Firm or Equity ASAP] Holder who has been and is expelled or suspended from any self-regulatory organization or barred or suspended from being associated with a member of any self-regulatory organization;

(ii) suspend the trading privileges of an ETP Holder, [ETP Firm, Equity ASAP Holder,] who is in such financial or operating difficulty that the Corporation determines and so notifies the Commission that such suspension is necessary for the protection of the investors, creditors, ETP [Holders, ETP Firms, Equity ASAP] Holders or the Corporation;

(iii) suspend the trading privileges of an ETP Holder, [ETP Firm, Equity ASAP Holder,] or associated person of an ETP [Firm or Equity ASAP] Holder who is found in violation of any of the prohibited acts as specified in Rule 6.2(a)–(f) that are violations of Rules of the Corporation; or

(iv) limit or prohibit any person with respect to access to services offered by the Corporation if subparagraph (i) or (ii) is applicable to such person or, in the case of a person who is not an ETP Holder, [ETP Firm or Equity ASAP Holder,] if the Corporation determines that such person does not meet the qualification requirements or prerequisites for such access with safety to investors, creditors, ETP [Holders, ETP Firms, Equity ASAP] Holders or the Corporation.

(2) Non-Summary Suspension. The Corporation also may take the following actions, after written notice, after the passage of any grace period and/or applicable cure period, and after opportunity for hearing:

(i) cancel ETP trading privileges of an ETP Holder [or ETP Firm] that becomes ineligible for ETP trading privileges, or that continues to be associated with an ineligible person, or suspend or bar a person from continuing to be associated with an ETP Holder [or ETP Firm] because such person is or becomes ineligible for association under Rule [2.21(a)] *2.19(a);*

[(ii)—Deleted.]

[(iii)]*(ii)* suspend or cancel trading privileges of an ETP [Holder, ETP Firm or Equity ASAP] Holder for failure to pay any fees, charges, assessments, or fines to the Corporation under Rule 3.8; or failure to comply with an arbitration award or settlement agreement related to an arbitration or mediation under Rule 12;

[(iv)]*(iii)* cancel trading privileges of an ETP [Holder, ETP Firm, or Equity ASAP] Holder for failure to file or submit or request any report, document, or other information required to be filed with or requested by the Corporation under Rule 10.2(d); or

[(v)]*(iv)* limited or prohibit any ETP [Holder, ETP Firm, Equity ASAP] Holder, or associated person of an ETP [Firm or Equity ASAP] Holder or other person with respect to access to services offered by the Corporation, if the Corporation determines that such person does not meet the qualification requirements or prerequisites for such access or such person cannot be permitted to continue to have access with safety to investors, creditors, ETP [Holders, ETP Firms, Equity ASAP] Holders or the Corporation.

(b)—No change.

(c) Any action taken pursuant to Rule 11.2(a)(1) or (2) shall also be subject to the applicable provisions of Rule [10.14]*10.13.*

Commentary

.01—No change.

Effect of Suspension or Cancellation

Rule 11.3. When an ETP Holder, [ETP Firm, Equity ASAP Holder,] or associated person of an ETP [Firm or Equity ASAP] Holder has its trading privileges suspended or canceled by the Corporation for any reason specified in Rule 11.2(a)(1) or (2), such a person or organization shall be deprived during the term of the suspension of all rights and trading privileges conferred by the ETP [or Equity ASAP], except as otherwise provided in the Rules of the Corporation. The person or organization having trading privileges suspended or canceled shall remain subject to the disciplinary power of the Corporation with respect to any disciplinary action as provided by the Rules of the Corporation.

Disciplinary Measures During Suspension

Rule 11.4. An ETP Holder, [ETP Firm, Equity ASAP Holder,] or associated person of an ETP [Firm or Equity ASAP] Holder whose trading privileges are suspended under the provisions of Rule 11.2(a)(1) or (2) may be disciplined pursuant to the Rules of the Corporation for any offense committed either before or after the announcement of the suspension, in all respects as if no suspension were in effect.

Investigation Following Summary Suspension

Rule 11.5. Every ETP Holder, [ETP Firm, Equity ASAP Holder,] or associated person of an ETP [Firm or Equity ASAP] Holder whose trading privileges are suspended under the provisions of Rule 11.2(a)(1) shall immediately afford every facility required by the Corporation for the investigation of its affairs as required by the Board of Directors and shall, after the notification of the suspension, file with the Corporation a written statement covering all information required by the Corporation.

Grounds for Cancellation

Rule 11.6. If an ETP Holder, [ETP Firm, Equity ASAP Holder,] or associated person of an ETP [Firm or Equity ASAP] Holder has had privileges suspended under the provisions of Rule 11.2(a)(1) and such person or organization does not request a hearing within thirty (30) calendar days to review such suspension or at such hearing it is determined that the suspension was properly imposed, and such person or organization, has not within forty-five (45) calendar days after the suspension remedied the reason for such suspension and has not applied for reinstatement, the Board may cancel the trading privileges of such person or organization. If application for reinstatement is made within forty-five (45) calendar days of suspension as provided in this Rule, and such application is disapproved, the Board may cancel the trading privileges of such [the] person or organization.

Reinstatement

Rule 11.7. When an ETP Holder, [ETP Firm, Equity ASAP Holder,] or associated person of an ETP [Firm or Equity ASAP] Holder has had trading privileges suspended under the provisions of Rule 11.2(a)(1) or (2) applies for reinstatement, it must be demonstrated to the satisfaction of the Corporation that the problem or problems responsible for such suspension have been satisfactorily resolved. If such problem involves financial difficulty or operating inadequacies, the person or organization shall furnish to the Corporation comprehensive financial and operating reports in a form and manner to be prescribed by the Corporation. If the ETP Holder[, ETP Firm, Equity ASAP] Holder, or associated person of an ETP [Firm or Equity ASAP] Holder furnishes satisfactory proof of a resolution of the problem or problems responsible for such suspension, the Corporation shall notify in writing all ETP [Holders, ETP Firms, and Equity ASAP] Holders of the application for reinstatement and that a meeting of the Board to consider it will be held on a designated date which shall be not less than ten (10) business days subsequent to such notice. At such meeting at which a quorum is present the ETP Holder, [ETP Firm, Equity ASAP Holder,] or associated person of an ETP [Firm or Equity ASAP] Holder may be reinstated provided not less than a majority of the Directors voting approve the application.

Failure To Obtain Reinstatement

Rule 11.8. If an ETP Holder[, ETP Firm, Equity ASAP Holder,] or associated person of an ETP [Firm or Equity ASAP] Holder whose trading privileges have been suspended under the provisions of this Rule fails or is unable to apply for reinstatement in accordance with Rule 11.7, or fails to obtain reinstatement as therein provided, trading privileges conferred by an ETP [or Equity ASAP] will terminate.

**Rule 12**

**Arbitration**

Matters Subject to Arbitration

Rule 12.1. For purposes of this Rule, the following definitions apply:

(a) [the term ''ETP'' shall mean both ETP and Equity ASAP permits.]

[(b)] the terms ''service'' or ''serve'' shall mean effecting the delivery of a document to persons via first class mail, overnight delivery, hand delivery, or facsimile.

[(c)] *(b)* the term ''associated person'' shall also include ''affiliated'' person ''approved person'' and ''allied person''.

[(d)] *(c)* the term ''Director of Arbitration'' shall mean any person appointed or designated by the Corporation's Chief Executive Officer to direct the Corportion's arbitration program.

Rule 12.2.

(a) Any dispute, claim or controversy between parties who are ETP Holders [,ETP

Firms] or associated persons arising in connection with the securities business of such parties shall, at the request of any such party, be submitted for arbitration in accordance with this Rule.

(b)—No change.

(c) Any dispute, claim or controversy between a customer or non-ETP Holder and an ETP Holder[, ETP Firm] and/or associated person arising in connection with the securities business of such ETP Holder[, ETP Firm] and/or associated person shall be arbitrated under this Rule as provided by any duly executed and enforceable written agreement, or upon the request of the customer or non-ETP Holder.

(d)—No change.

(e) Class Action Claims

(1)–(2)—No change.

(3) No ETP Holder[, ETP Firm] or associated person shall seek to enforce any agreement to arbitrate against a customer that has initiated in court a putative class action or is a member of a putative or certified class with respect to any claims encompassed by the class action unless and until: (i) the class certification is denied; (ii) the class is decertified; (iii) the customer is excluded from the class by the court; or (iv) the customer elects not to participate in the putative or certified class action or, if applicable, has complied with any conditions for withdrawing from the class prescribed by the court.

(4) No ETP Holder[, ETP Firm] and/or associated person shall be deemed to have waived any of its rights under this Rule or under any agreement to arbitrate to which it is party except to the extent stated in this paragraph (e).

(f)–(g)—No change.

(h) It may be deemed conduct inconsistent with just and equitable principles of trade for an EPT Holder or [an ETP Firm, or] a person associated with an ETP Holder [or an ETP Firm] to fail to submit to arbitration on demand under the provisions of this Rule, or to fail to appear or to provide any document in his or her or its possession or control as directed pursuant to the provisions of this Rule or to fail to honor an award of arbitrators properly rendered pursuant to the provisions of this Rule where a timely motion has not been made to vacate or modify such award pursuant to applicable law.

(i)—No change.

(j) For purposes of this Rule, the terms ETP Holder, [ETP Firm,] associated person and employee of an ETP Holder [or ETP Firm] shall be deemed to encompass those persons who were ETP Holders, [ETP Firms] or associated persons or employees thereof at the time the circumstances occurred which gave rise to the controversy.

Simplified Arbitration for Public Customers

Rule 12.3(a). Any dispute, claim or controversy arising between a public customer(s) and an ETP Holder[, an ETP Firm] and/or person associated with an ETP Holder [or an ETP Firm] required to be arbitrated under the Bylaws and Rules of the Corporation and involving a dollar amount not exceeding $10,000, exclusive of attendant costs and interest, shall upon demand of the customer(s) or by written consent of the parties be arbitrated as hereinafter provided.

(b)–(1)—No change.

Rule 12.4–12.8—No change.

Designation of Number of Arbitrators

Rule 12.9.

(a)—No change.

(b In arbitration matters involving public customers and where the amount in controversy exceeds $30,000, or where the matter in controversy does not involve or disclose a money claim, the Director of Arbitration shall appoint an arbitration panel which [consist] *consists* of no fewer than three (3) arbitrators, nor more than five (5), at least a majority of whom shall not be from the securities industry, unless the public customer requests a panel consisting of at least a majority from the securities industry.

(c) An arbitrator will be deemed as being from the securities industry if he or she:

(1) is a person associated with an ETP Holder, [ETP Firm,] broker/dealer, government securities broker, government securities dealer, municipal securities dealer or registered investment advisor, or

(2)–(4)—No change.

(d)—No change.

(e) ETP Holder Controversies. In all arbitration matters not involving public customers, the Director of Arbitration shall assign the matter to a panel consisting of ETP Holders [or ETP Firm] representatives. Such members of the arbitration panel shall not be affiliated with any of the parties to the controversy or have any interest in the matter to be heard. For controversies involving an amount of $10,000 or less, the panel shall consist of one (1) ETP Holder [or ETP Firm] representative. For all other controversies, the panel shall consist of three (3) ETP [Holders or ETP Firm] *Holder* representatives.

(f)–(g)—No change.

Rule 12.10–12.13—No change.

Initiation of Proceedings

Rule 12.14. Except as otherwise provided herein, an arbitration proceeding under this Rule shall be instituted as follows:

(a)–(b)—No change.

(c) Service and Filing with the Director of Arbitration

(1)—No change.

(2) If an ETP [Firm] *Holder* and a person associated with the ETP [Firm] *Holder* are named parties to an arbitration proceeding at the time of the filing of the Statement of Claim, service on the associated person may be made by service on the named ETP [Firm] *Holder* and the ETP [Firm] *Holder* shall then perfect service upon the associated person. If the ETP [Firm] *Holder* does not undertake to represent the associated person, the ETP [Firm] *Holder* shall serve the associated person with the Statement of Claim, shall advise all parties and the Director of Arbitration of that fact, and shall provide such associated person's current address.

(d) Joining and Consolidation

(1) Permissive Joinder. All persons may join in one action as claimants if they assert any right to relief jointly, severally, or arising out of the same transaction, occurrence or series of transactions or occurrences and if any questions of law or fact common to these claimants will arise in the action.

All persons may be joined in one action as respondents if there is asserted against them jointly or severally, any right to relief arising out of the same transaction, occurrence or series [or] *of* transactions or occurrences and if any questions of law or fact common to all respondents will arise in the action.

A claimant or respondent need not assert rights to or defend against all the relief demanded. Judgment may be given for one or more claimants according to their respective rights to relief, and against one or more respondents according to their respective liabilities.

(2)–(4)—No change.

Rule 12.15–12.21—No change.

Power To Direct Appearances and Production of Documents

Rule 12.22. The arbitrators shall be empowered without resort to the subpoena process to direct the appearance of any person employed or associated with any ETP Holder [or ETP Firm] and/or direct the production of any records in the possession or control of such persons, ETP Holders [or ETP Firms]. Unless the arbitrator(s) direct otherwise, the party requesting the appearance of a person or the production of documents under this section shall bear all reasonable costs of such appearance and/or production.

Rule 12.23–12.31—No change.

Schedule of Fees

Rule 12.32(a)–(i)—No change.

(j) In an industry or clearing controversy, where the ETP Holder [or ETP Firm] claim or controversy does not involve or disclose a money claim, or is unspecified, the filing fee will be $300 and the hearing session deposit shall be $1,000 per hearing session.

**Schedule of Fees**

PUBLIC CUSTOMER CLAIMANT

(E.g., public customer v. ETP [Firm and/or ETP] Holder)

| Amount in dispute (exclusive of interest and expenses) | Filing fee | Hearing session deposit | |
|---|---|---|---|
| | | *Documents only* | *Hearing w/1 arbitrator* |
| $.01–$1,000.00 | $15 | $15 | $15 |

PUBLIC CUSTOMER CLAIMANT—Continued

(E.g., public customer v. ETP [Firm and/or ETP] Holder)

| Amount in dispute (exclusive of interest and expenses) | Filing fee | Hearing session deposit | |
|---|---|---|---|
| | | *Documents only* | *Hearing w/1 arbitrator* |
| $1,000.01–$2,500.00 | 25 | 25 | 25 |
| $2,500.01–$5,000.00 | 50 | 75 | 100 |
| $5,000.01–$10,000.00 | 75 | 75 | 200 |

| Amount in dispute (exclusive of interest and expenses) | Filing fee | Hearing session deposit | |
|---|---|---|---|
| | | One arbitrator or pre-hearing conference | Three arbitrators |
| $10,000.01–$30,000.00 | $100 | $300 | $400 |

| Amount in dispute (exclusive of interest and expenses) | Filing fee | Hearing session deposit | |
|---|---|---|---|
| | | Pre-hearing conference | Three arbitrators |
| $30,000.01–$50,000.00 | 120 | *$300 | 400 |
| $50,000.01–$100,000.00 | 150 | **300 | 500 |
| $100,000.01–$500,000.00 | 200 | **300 | 750 |
| $500,000.01–$5,000,000.00 | 250 | **300 | 1,000 |
| Above $5,000.00 | 300 | **300 | 1,500 |

INDUSTRY/CLEARING CLAIMANT

(E.g., ETP Holder [or Firm] v. customer

| Amount in dispute (exclusive of interest and expenses) | Filing fee | Hearing session deposit | |
|---|---|---|---|
| | | *Documents only* | *Hearing w/1 arbitrator* |
| $01–$10,000.00 | $500 | $75 | $300 |

| Amount in dispute (exclusive of interest and expenses) | Filing fee | Hearing session deposit | |
|---|---|---|---|
| | | *One arbitrator* | *Three arbitrators* |
| $10,000.01–$30,000.00 | $500 | *$300 | $600 |
| $30,000.01–$100,000.00 | 500 | **300 | 600 |

| Amount in dispute (exclusive of interest and expenses) | Filing fee | Hearing session deposit | |
|---|---|---|---|
| | | Pre-hearing conference | Three arbitrators |
| $100,000.01–$500,000.00 | $500 | **$300 | $750 |
| $500,000.01–$5,000,000.00 | 500 | **300 | 1,000 |
| Above $5,000,000.00 | 500 | **300 | 1,500 |

* This would apply to the following cases:
(a) where parties elect to have claims between $10,000 and $30,000 resolved by a single arbitrator pursuant to Rule 12.9.
(f) pre-hearing conferences with a single arbitrator in cases where a three person panel has been appointed.
** For pre-hearing conferences only.

ETP HOLDER [OR ETP FIRM] CONTROVERSIES

(E.g., associated person v. ETP Holder [ or Firm])

| Amount in dispute (exclusive of interest and expenses) | Filing fee | Hearing session deposit | |
|---|---|---|---|
| | | *One arbitrator* | *Three arbitrators* |
| $.01–$10,000.00 | $100 | $200 | –NA– |
| $10,000.01–$100,000 | 200 | –NA– | $750 |
| $100,000.01 or more | 300 | –NA– | 1,000 |

ETP Holder Surcharge

Rule 12.33(a). Each ETP Holder[, ETP Firm] or associated person who is named a party to an arbitration proceeding, whether in a claim, counterclaim, third-party claim, or cross-claim shall be assessed a non-refundable surcharge pursuant to the schedule in Rule 12.33(c) when the Arbitration Department perfects service of the claim naming the ETP Holder[, ETP Firm] or associated person on any party to the proceeding.

For each associated person who is named, the surcharge shall be assessed against the ETP Holder(s) [or ETP firm(s)] which employed the associated person at the time of the events which gave rise to the dispute, claim or controversy.

No ETP Holder [or ETP Firm] shall be assessed more than a single surcharge in any arbitration proceeding. The surcharge shall not be subject to reimbursement under rule 12.32.

(b) For purposes of this Rule, service is perfected when the Arbitration Department properly serves the Respondent(s) to the arbitration proceeding under Rule 12.14(c).

(c) Schedule of Surcharge Rates:

| Amount in dispute | Surcharge |
|---|---|
| $0.01 to $10,000 | $100 |
| $10,000.01 to $50,000 | 200 |
| $50,000.01 to $100,000 | 300 |
| $100,000.01 to $500,000 | 350 |
| About $500,000 | 500 |

Requirements when Using Pre-Dispute Arbitration Agreements With Customers

Rule 12.34—No change.

**Rule 13**

**Liability of Directors and Corporation**

Liability of Directors

Rule 13.1. Any provision of the [Articles] *Certificate* of Incorporation, Bylaws, or the Rules of the Corporation that provides or purports to provide that the members of the Board of Directors shall not be liable to the Corporation or its ETP Holders[, Equity ASAP Holders, and ETP Firms] for monetary damages for breach of fiduciary duty as a Director shall not be applied in any instance in which such liability arises directly or indirectly as a result of a violation of federal securities laws.

Liability of Corporation

Rule 13.2(a). Except as otherwise expressly provided in these [rules] *Rules*, neither the Corporation nor its Directors, officers, committee members, employees or agents shall be liable to the ETP Holders[, Equity ASAP Holders, and ETP Firms] of the Corporation or to persons associated therewith for any loss, expense, damages or claims that arise out of the use or enjoyment of the facilities or services afforded by the Corporation, any interruption in or failure or unavailability of any such facilities or services, or any action taken or omitted to be taken in respect to the business of the Corporation except to the extent such loss, expense, damages or claims are attributable to the willful misconduct, gross negligence, bad faith or fraudulent or criminal acts of the Corporation or its officers, employees or agents acting within the scope of their authority. The limitation of liability set forth in this paragraph shall not apply to violations of federal securities laws.

Without limiting the generality of the foregoing and subject to the same exception, the Corporation shall have no liability to any person for any loss, expense, damages or claims that result from any error, omission or delay in calculating or disseminating any current or closing index value, or any reports of transactions in or quotations for securities traded on the Corporation.

The Corporation makes no warranty, express or implied, as to results to be obtained by any person or entity from the use of any data transmitted or disseminated by or on behalf of the Corporation or any reporting authority designated by the Corporation, including but not limited to reports of transactions in or quotations for securities traded on the Corporation, or reports index values or related data, and the Corporation makes no express or implied warranties of merchantability or fitness for a particular purpose or use with respect to any such data. The foregoing limitations of liability and disclaimers shall be in addition to, and not in limitation of, any other provisions of the Bylaws or Rules.

(b) Whenever custody of an unexecuted order is transmitted by an ETP Holder[, Equity ASAP Holder, or ETP Firm] to or through the Corporation's order routing systems, electronic book or automatic executions systems or to any other automated facility of the Corporation whereby the Corporation assumes responsibility for the transmission or execution of the order, provided that the Corporation has acknowledged receipt of such order, the Corporation's liability for the negligent acts or omissions of its employees or for the failure of its systems or facilities shall not exceed the limits provided in this paragraph (b), and no assets of the Corporation shall be applied or shall be subject to such liability in excess of the following limits:

(1) As to any one or more claims made by a single ETP Holder[, Equity ASAP Holder, or ETP Firm] growing out of the use or [employment] *enjoyment* of the facilities afforded by the Corporation on a single trading day, the Corporation shall not be liable in excess of the larger of $100,000, or the amount of any recovery obtained by the Corporation under any applicable insurance maintained by the Corporation;

(2) As to the aggregate of all claims made by all ETP Holders[, Equity ASAP Holders, and ETP Firms] growing out of the use or [employment] *enjoyment* of the facilities afforded by the Corporation on a single trading day, the Corporation shall not be liable in excess of the larger of $250,000 or the amount of the recovery obtained by the Corporation under any applicable insurance maintained by the Corporation.

(3) As to the aggregate of all claims made by all ETP Holders[, Equity ASAP Holders, and ETP Firms] growing out of the use or enjoyment of the facilities afforded by the Corporation during a single calendar month, the Corporation shall not liable in excess of the larger of $500,000, or the amount of the recovery obtained by the Corporation under any applicable insurance maintained by the Corporation.

(c)—No change.

Legal Proceedings Against Directors, Officers, Employees or Agents

Rule 13.3. No ETP Holder[, Equity ASAP Holder, ETP Firm], or any other associated person shall institute a lawsuit or other legal proceeding against any Director, officer, employee, agent or other official of the Corporation or any subsidiary of the Corporation, for actions taken or omitted to be taken in connection with the official business of the Corporation or any subsidiary, except to the extent such actions or omissions constitute violations of federal securities laws for which a private right of action exists and except with respect to the Directors of the Corporation, to the extent inconsistent with the [Articles] *Certificate* of Incorporation. This Rule shall not apply to appeals of disciplinary actions or other actions by the Corporation as provided for in the Rules.

Corporation's Costs of Defending Legal Proceedings

Rule 13.4. Any ETP Holder[, Equity ASAP Holder, ETP Firm,] or any other associated person who fails to prevail in a lawsuit or other legal proceeding instituted by such person against the Corporation or any of its Directors, officers, committee members, employees or agents, and related to the business of the Corporation, shall pay to the Corporation all reasonable expenses, including attorney's fees, incurred by the Corporation in the defense of such proceeding, but only in the event that such expenses exceed Fifty Thousand Dollars ($50,000.00). This provision shall not apply to disciplinary actions by the Corporation, to administrative appeals of actions of the Corporation or in any specific instance where the Board of Directors has granted a waiver of this Rule.

**Rule 14**

**Plan of Delegation of Functions by the Pacific Exchange, Inc. to PCX Equities, Inc.**

Pacific Exchange, Inc.

Rule 14.1. The Pacific Exchange, Inc. (''PCX''), the registered national securities exchange, is the parent company of the wholly-owned subsidiary PCX Equities Inc. (''PCX Equities). The term ''Exchange'' shall refer to the PCX and PCX Equities collectively.

(a) Functions and Authority of the PCX. The PCX shall have ultimate responsibility for the rules and regulations of the Exchange and its operation and administration. As set forth below in Rule 14.2(a), the PCX has delegated certain authority and functions to PCX Equities. Actions taken pursuant to delegated authority, however, remain subject to review, ratification or rejection by the PCX Board of Governors (''PCX Board'') in accordance with procedures established by that Board. Any function or responsibility as a registered national securities exchange under the Securities Exchange Act of 1934 (''Act''), or as set forth in the [Certification]

*Certificate* of Incorporation, the Constitution or the PCX Rules is hereby reserved, except as expressly delegated to PCX Equities. In addition, the PCX expressly retains the following authority and functions:

(1)–(9)—No change.

(b) Access to and Status of Officers, Directors, Employees, Books, Records, and Premises of PCX Equities. Notwithstanding the delegation of authority to PCX Equities, as set forth in Rule 14.2(a) below, the staff, books, records, premises, officers, directors, employees and agents of the PCX Equities are subject to the oversight of the PCX pursuant to the Act*, and all officers, directors, employees, and agents of PCX Equities are officers, directors, employees, and agents of the PCX for purposes of the Act.* The books and records of PCX Equities shall be subject at all times to inspection and copying by the PCX.

PCX Equities Inc. (''PCX Equities'')

Rule 14.2(a) Delegation of Functions and Authority.

(1) Subject to Rule 14.1(a)(9), the PCX hereby delegates to PCX Equities and its subsidiary Pacific Clearing Corporation and PCX Equities assumes the following responsibilities and functions with respect to the equities business of the Exchange:

(A) To establish and interpret rules and regulations and provide exemptions for ETP Holders[, ETP Firms, Equity ASAP Holders] or associated persons including, but not limited to trading rules, fees, access to and use of system facilities and arbitration procedures.

(B) To determine regulatory and trading policies, including the development and adoption of necessary or appropriate rule changes, relating to the business conduct and trading activities of ETP Holders[, ETP Firms, Equity ASAP Holders] and associated persons. This includes, but is not limited to,

(i) arbitration of disputes among and between ETP Holders[, ETP Firms, Equity ASAP Holders] *and* associated persons and customers arising from transactions on the facility;

(ii)—No change.

(iii) qualifications for ETP Holders[, ETP Firms, Equity ASAP Holders] and associated persons;

(iv) clearance and settlement of securities transactions and other financial responsibility and operational matters affecting ETP Holders[, ETP Firms, Equity ASAP Holders] and associated persons in general and securities traded on PCX Equities;

(v)–(vi)—No change.

(C) To take necessary or appropriate action to assure compliance with the [rules] *Rules* and procedures of PCX Equities, the federal securities laws, and other laws, rules and regulations that the PCX Equities has the authority to administer or enforce, through examination, surveillance, investigation, enforcement, disciplinary, and other programs.

(D) To administer programs and systems for the surveillance and enforcement of rules governing ETP Holders[, ETP Firms, Equity ASAP Holders] and associated persons' conduct and trading activities on PCX Equities.

(E) To examine and investigate ETP Holders[, ETP Firms, Equity ASAP Holders] and associated persons to determine if they have violated the [rules] *Rules* or procedures of PCX Equities, the federal securities laws, and other laws, rules, and regulations that the Exchange has the authority to administer, interpret, or enforce.

(F)–(G)—No change.

(H) To determine whether ETP Holder [and Equity ASAP Holder] applicants have met the requirements established by PCX Equities for holding an ETP [or Equity ASAP].

(I) To determine whether persons seeking to register as associated persons of ETP Holders[, ETP Firms or Equity ASAP Holders] have met such qualifications for registration as may be established by PCX Equities, including whether statutorily disqualified persons will be permitted to associate with particular ETP Holders[, ETP Firms or Equity ASAP Holders] and the conditions of such association.

(J) To place restrictions on the business activities of ETP [Holders, ETP Firms, Equity ASAP] Holders and associated persons consistent with the public interest, the protection of investors, and the federal securities laws.

(K) To establish and assess fees and other charges on ETP Holders, [ETP Firms, Equity ASAP Holders,] associated persons, issuers and others using the products, services or facilities of PCX Equities.

(L)–(O)—No change.

(P) To develop and adopt [rules] *Rules,* interpretations, policies, and procedures and provide exemptions to maintain and enhance the integrity, fairness, efficiency, and competitiveness of PCX Equities.

(Q)—No change.

(R) To develop, adopt, administer and enforce policies and [rules] *Rules* of PCX Equities governing listing standards applicable to securities traded on PCX Equities and the issuers of those securities.

(S)–(U)—No change.

(2)–(c)—No change.

***Archipelago Exchange, L.L.C., and Archipelago Holdings, L.L.C.***

*Rule 14.3(a) Access to and Status of Books, Records, Premises, Officers, Directors, Agents and Employees of Archipelago Exchange, L.L.C. The books, records, premises, officers, directors, agents and employees of Archipelago Exchange, L.L.C., shall be deemed to be the books, records, premises, officers, directors, agents and employees of PCX and PCX Equities for purposes of and subject to oversight pursuant to the Securities Exchange Act. The books and records of Archipelago Exchange, L.L.C., shall be subject at all times to inspection and copying by the PCX, PCX Equities and the SEC.*

*(b) Access to and Status of Officers and Directors of Archipelago Holdings, L.L.C. All officers and directors of Archipelago Holdings, L.L.C., shall be deemed to be officers and directors of PCX and PCX Equities for purposes of and subject to oversight pursuant to the Securities Exchange Act.*

*(c) Paragraphs (a) and (b) above shall not be deemed to create any rights or benefits for any person or entity other than the SEC.*

**[PCX Equities, Inc.]**

**[Equity Floor Procedure Advices]**

[1–A—3–A—Deleted.]

[FR Doc. 00–30518 Filed 12–14–00; 8:45 am]

BILLING CODE 8010–01–P

# Reader Aids

**Federal Register**

Vol. 65, No. 242

Friday, December 15, 2000

## CUSTOMER SERVICE AND INFORMATION

**Federal Register/Code of Federal Regulations**

| | |
|---|---|
| General Information, indexes and other finding aids | **202–523–5227** |
| **Laws** | **523–5227** |
| **Presidential Documents** | |
| Executive orders and proclamations | **523–5227** |
| **The United States Government Manual** | **523–5227** |
| **Other Services** | |
| Electronic and on-line services (voice) | **523–4534** |
| Privacy Act Compilation | **523–3187** |
| Public Laws Update Service (numbers, dates, etc.) | **523–6641** |
| TTY for the deaf-and-hard-of-hearing | **523–5229** |

## ELECTRONIC RESEARCH

### World Wide Web

Full text of the daily Federal Register, CFR and other publications:

**http://www.access.gpo.gov/nara**

Federal Register information and research tools, including Public Inspection List, indexes, and links to GPO Access:

**http://www.nara.gov/fedreg**

### E-mail

**PENS** (Public Law Electronic Notification Service) is an E-mail service for notification of recently enacted Public Laws. To subscribe, send E-mail to

**listserv@www.gsa.gov**

with the text message:

subscribe PUBLAWS-L your name

Use listserv@www.gsa.gov only to subscribe or unsubscribe to PENS. We cannot respond to specific inquiries.

**Reference questions.** Send questions and comments about the Federal Register system to:

**info@fedreg.nara.gov**

The Federal Register staff cannot interpret specific documents or regulations.

## FEDERAL REGISTER PAGES AND DATE, DECEMBER

75153–75580 ..... 1
75581–75852 ..... 4
75853–76114 ..... 5
76115–76560 ..... 6
76561–76914 ..... 7
76915–77244 ..... 8
77245–77494 .....11
77495–77754 .....12
77755–78074 .....13
78075–78402 .....14
78403–78894 .....15

## CFR PARTS AFFECTED DURING DECEMBER

At the end of each month, the Office of the Federal Register publishes separately a List of CFR Sections Affected (LSA), which lists parts and sections affected by documents published since the revision date of each title.

**3 CFR**

**Proclamations:**
5030 (See EO 13178) .....76913
5928 (See EO 13178) .....76913
6425 (See Proc. 7383) .....76551
7219 (See EO 13178) .....76913
7382.....75851, 76348
7383.....76551
7384.....76903
7385.....77495
7386.....78075

**Executive Orders:**
April 17, 1926 (Revoked in part by PLO 7470).....76663
11888 (See Proc. 7383) .....76551
13089 (See EO 13178) .....76913
13158 (See EO 13178) .....76913
13177.....76558
13178.....76913
13179.....77487
13180.....77493

**5 CFR**

213.....78077
315.....78077
531.....75153
1315.....78403

**7 CFR**

2.....77755
59.....75464
246.....77245, 77769
723.....78405
773.....76115
774.....76115
929.....78079
984.....78081
1464.....78405
1792.....76915

**Proposed Rules:**
15.....76115
15b.....76115
301.....76582
319.....75187
930.....77323
1000.....76832, 77837
1001.....76832, 77837
1005.....76832, 77837
1006.....76832, 77837
1007.....76832, 77837
1030.....76832, 77837
1032.....76832, 77837
1033.....76832, 77837
1124.....76832, 77837
1126.....76832, 77837
1131.....76832, 77837
1135.....76832, 77837

**8 CFR**

**Proposed Rules:**
208.....76121, 76588

**9 CFR**

78.....75581
94.....77771

**Proposed Rules:**
1.....75635
381.....75187
424.....75187

**10 CFR**

50.....77773
72.....75869, 76896
440.....77210

**Proposed Rules:**
4.....76480
72.....75869, 76899
50.....76178
430.....75196
1040.....76480

**11 CFR**

100.....76138
109.....76138
110.....76138

**12 CFR**

3.....75856
8.....75859
14.....75822
19.....77250
208.....75822, 75856
225.....75856
325.....75856
343.....75822
536.....75822

**Proposed Rules:**
3.....76180
5.....75870, 75872
8.....75196
9.....75872
203.....78656
208.....76180
225.....76180
325.....76180
567.....76180
584.....77528

**13 CFR**

**Proposed Rules:**
112.....76480
117.....76480
121.....76184

**14 CFR**

25.....76147, 77252

39 .....75582, 75585, 75588, 75590, 75592, 75595, 75597, 75599, 75601, 75603, 75605, 75608, 75610, 75611, 75613, 75615, 75617, 75618, 75620, 75624, 75625, 76149, 77259, 77261, 77263, 77774, 77776, 77778, 77780, 77782, 77783, 77785, 78083
71 .....76150, 77282, 77497, 77811
73.....76151
97 .....78085, 78086, 78089
**Proposed Rules:**
39 .....75198, 75877, 75879, 75881, 75883, 75887, 76185, 76187, 76950, 76953, 77528, 77530, 78122
1250.....76460
1251.....76460
1252.....76460

**15 CFR**

736.....76561
744.....76561
801.....77282, 77812
902.....77450
930.....77124
**Proposed Rules:**
8.....76460
8b.....76460
20.....76460

**16 CFR**

0.....78407
23.....78738
300.....75154
303.....75154

**17 CFR**

1.....77962, 77993
3.....77993
4.....77993
5.....77962
15.....77962
35.....78030
36.....77962
37.....77962
38.....77962
39.....78020
100.....77962
140.....77993
155.....77993
166.....77993
170.....77962
180.....77962
210.....76012
240 .....75414, 75439, 76012
242.....76562
270.....76189
**Proposed Rules:**
32.....77838

**18 CFR**

11.....76916
33.....76009
284.....75628, 77285
**Proposed Rules:**
1302.....76460
1307.....76460
1309.....76460

**19 CFR**

12.....77813
113.....77813
132.....77816
162.....78091
163.....77813, 77816
171.....78091
178.....77813, 78091
**Proposed Rules:**
24.....78430

**21 CFR**

16.....76096
73.....75158
101.....76096
115.....76096
179.....76096
510.....76924
514.....76924
556.....76930
558.....76924
660.....77497
876.....76930
**Proposed Rules:**
101.....75887
660.....77532
1271.....77838
1308.....77328

**22 CFR**

22.....78094
42.....78094, 78095
**Proposed Rules:**
141.....76460
142.....76460
143.....76460
209.....76460
217.....76460
218.....76460

**23 CFR**

**Proposed Rules:**
945.....77534

**24 CFR**

5.....77230
200.....77230
**Proposed Rules:**
30.....76520

**25 CFR**

20.....76563
1000.....78688
**Proposed Rules:**
580.....75888

**26 CFR**

1.....76932
31.....76152, 77818
301.....78409
602.....77818
**Proposed Rules:**
1.....76194
31.....76194

**27 CFR**

4.....78095
9.....78097

**28 CFR**

0.....78413
16.....75158, 75159
**Proposed Rules:**
16.....75201
42.....76460

**29 CFR**

1625.....77438
1910.....76563
4006.....75160, 77429
4007.....75160, 77429
4011.....75164
4022.....75164, 78414
4044.....75165, 78414
**Proposed Rules:**
31.....76460
32.....76460
1910.....76598

**30 CFR**

42.....77292
47.....77292
56.....77292
57.....77292
77.....77292
250.....76933
920.....78416
**Proposed Rules:**
203.....78431
256.....78432
938.....76954
948.....75889

**31 CFR**

Ch. V.....75629
1.....76009
29.....77500

**32 CFR**

**Proposed Rules:**
311.....75897

**33 CFR**

100 .....76153, 77512, 77513
117.....76154, 76935
**Proposed Rules:**
97.....75201
117.....76956
165.....76195, 77839

**34 CFR**

373.....77432

**36 CFR**

800.....77698
**Proposed Rules:**
18.....77538

**37 CFR**

1.....76756
201.....77292
253.....75167
**Proposed Rules:**
201.....77330, 78434

**38 CFR**

1.....76937
**Proposed Rules:**
18.....76460
36.....76957

**39 CFR**

20 .....76154, 77076, 77302
111 .....75167, 75863, 77515, 78538
**Proposed Rules:**
111.....75210

**40 CFR**

9.....76708
52 .....76567, 76938, 77307, 77308, 78100, 78416, 78418
60 .....75338, 76350, 76378, 78268
61.....78268
63.....76941, 78268
65.....78268
70.....78102
81.....77308
141.....76708
142.....76708
180 .....75168, 75174, 76169, 76171, 78104
300.....75179, 76945
799.....78746
**Proposed Rules:**
7.....76460
52 .....75215, 76197, 76958, 77695, 78434, 78439
55.....77333
63.....76460, 76958
81.....76303, 77544
86.....76797
94.....76797
261 .....75637, 75897, 77429
268.....75651
300.....75215, 76965
1048.....76797
1051.....76797

**41 CFR**

**Proposed Rules:**
101-6.....76460
101-8.....76460

**42 CFR**

**Proposed Rules:**
36.....75906
1001.....78124

**43 CFR**

6300.....78358
8560.....78358
**Proposed Rules:**
17.....76460
3000.....78440
3100.....78440
3200.....78440
3400.....78440
3500.....78440
3600.....78440
3800.....78440

**44 CFR**

64.....75632, 78109
**Proposed Rules:**
7.....76460
67.....75908

**45 CFR**

270.....75633
276.....75633
308.....77742
2525.....77820
**Proposed Rules:**
605.....76460
611.....76460
617.....76460
1110.....76460
1151.....76460
1156.....76460
1170.....76460
1203.....76460
1232.....76460

**46 CFR**

67.....76572

207 ....77521

**47 CFR**

73 ....76947, 76948, 77318
76 ....76948
80 ....77821
95 ....77821

**Proposed Rules:**

0 ....77545
1 ....77545, 78455
21 ....78455
43 ....75656
61 ....77545, 78455
69 ....77545
73 ....75221, 75222, 762096, 76207, 77338, 78455
74 ....78455
76 ....78455
80 ....76966

**48 CFR**

212 ....77827
215 ....77829
217 ....77831
219 ....77831
225 ....77827, 77832
236 ....77831
242 ....77832
250 ....77835
252 ....77827, 77832
1504 ....75863
1552 ....75863

**Proposed Rules:**

1842 ....76600
1852 ....76600

**49 CFR**

195 ....75378
385 ....78422
386 ....78422
611 ....76864
1002 ....76174, 77319

**Proposed Rules:**

21 ....76460
27 ....76460
107 ....76890
195 ....76968
567 ....75222
571 ....75222, 77339, 78461
574 ....75222
575 ....75222

**50 CFR**

20 ....76886
230 ....75186
300 ....75866
600 ....77450
635 ....75867, 77523
648 ....76577, 76578, 77450, 77470
679 ....76175, 76578, 77836, 78110, 78119

**Proposed Rules:**

17 ....76207, 77178
216 ....75230, 77546
600 ....75911, 75912
635 ....76601
648 ....75232, 75912
679 ....78126, 78131
697 ....75916

## REMINDERS

The items in this list were editorially compiled as an aid to Federal Register users. Inclusion or exclusion from this list has no legal significance.

## RULES GOING INTO EFFECT DECEMBER 15, 2000

**AGRICULTURE DEPARTMENT**

**Agricultural Marketing Service**

Cranberries grown in—
- Massachusetts et al.; published 12-14-00

Walnuts grown in—
- California; published 12-14-00

**COMMERCE DEPARTMENT**

**National Oceanic and Atmospheric Administration**

Fishery conservation and management:
- Alaska; fisheries of Exclusive Economic Zone—
  - Reporting and recordkeeping requirements; correction; published 3-1-00

**ENERGY DEPARTMENT**

Acquisition regulations:
- Management and operating contracts; patent regulations; revision; published 11-15-00

**ENVIRONMENTAL PROTECTION AGENCY**

Air quality implementation plans; approval and promulgation; various States:
- Massachusetts; published 11-15-00

Toxic substances:
- Asbestos worker protection; published 11-15-00
- Health effects (test) guidelines; published 12-15-00

**FEDERAL TRADE COMMISSION**

Practice and procedure:
- Technical amendments; published 12-15-00

**INTERIOR DEPARTMENT**

**Surface Mining Reclamation and Enforcement Office**

Permanent program and abandoned mine land reclamation plan submissions:
- Maryland; correction; published 12-15-00

**JUSTICE DEPARTMENT**

Compromise and close civil claims authority; definition of gross amount of the original claim; published 12-15-00

**OFFICE OF MANAGEMENT AND BUDGET**

**Management and Budget Office**

Prompt Payment Act; implementation:
- Interest penalties under cost-reimbursement contract services; published 12-15-00

**POSTAL SERVICE**

Domestic Mail Manual:
- Palletized standard mail, and bound printed matter, etc.; preparation changes; published 8-8-00
- Sacking and palletizing periodicals nonletters and standard mail (A) flats, traying first-class flats, and labeling pallets; published 8-16-00

**TRANSPORTATION DEPARTMENT**

**Federal Aviation Administration**

Airworthiness directives:
- Pilatus Aircraft Ltd.; published 10-27-00¶

## RULES GOING INTO EFFECT DECEMBER 16, 2000

**COMMERCE DEPARTMENT**

**National Oceanic and Atmospheric Administration**

Fishery conservation and management:
- Caribbean, Gulf, and South Atlantic fisheries—
  - Gulf of Mexico reef fish; published 6-9-00
- Northeastern United States fisheries—
  - Summer flounder; published 12-7-00

## COMMENTS DUE NEXT WEEK

**AGRICULTURE DEPARTMENT**

**Animal and Plant Health Inspection Service**

Plant-related quarantine, foreign:
- Artificially dwarfed plants in growing media from China; comments due by 12-20-00; published 12-1-00

**AGRICULTURE DEPARTMENT**

**Federal Crop Insurance Corporation**

Crop insurance regulations:
- Sugarcane; comments due by 12-18-00; published 10-18-00

**COMMERCE DEPARTMENT**

**National Oceanic and Atmospheric Administration**

Fishery conservation and management:
- Magnuson-Stevens Act provisions—
  - Domestic fisheries; exempted fishing permits; comments due by 12-20-00; published 12-5-00
- Northeastern United States fisheries—
  - Summer flounder, scup, and black sea bass; comments due by 12-19-00; published 11-28-00
- West Coast States and Western Pacific fisheries—
  - Western Pacific pelagic; comments due by 12-18-00; published 11-3-00

International fisheries regulations:
- Fraser River sockeye and pink salmon; inseason orders; comments due by 12-20-00; published 12-5-00

**ENVIRONMENTAL PROTECTION AGENCY**

Air pollutants, hazardous; national emission standards:
- Rubber tire manufacturing facilities; comments due by 12-18-00; published 10-18-00

Air quality implementation plans; approval and promulgation; various States:
- Massachusetts; comments due by 12-18-00; published 10-26-00
- Texas; comments due by 12-20-00; published 11-20-00

Superfund program:
- National oil and hazardous substances contingency plan—
  - National priorities list update; comments due by 12-22-00; published 11-22-00
  - National priorities list update; comments due by 12-22-00; published 11-22-00

**FEDERAL COMMUNICATIONS COMMISSION**

Common carrier services:
- Incumbent local exchange carriers; accounting and ARMIS reporting requirements; comprehensive review; biennial regulatory review (Phases 2 and 3); comments due by 12-21-00; published 11-13-00

Frequency allocations and radio treaty matters:
- 3650-3700 MHz band and 4.9 GHz band; transfer from Federal Government use; comments due by 12-18-00; published 11-17-00

Radio stations; table of assignments:
- Alabama; comments due by 12-18-00; published 11-13-00
- Arizona; comments due by 12-18-00; published 11-13-00
- Colorado and California; comments due by 12-18-00; published 11-13-00
- Georgia; comments due by 12-18-00; published 11-13-00
- Tennessee; comments due by 12-18-00; published 11-13-00
- West Virginia; comments due by 12-18-00; published 11-13-00

Television broadcasting:
- Children's television programming reports; filing requirements extension; comments due by 12-18-00; published 11-9-00
- Commercial television station public interest obligations; standardized and enhanced disclosure; comments due by 12-18-00; published 10-19-00
- Digital television broadcasters; children's television obligations; comments due by 12-18-00; published 11-8-00

**HEALTH AND HUMAN SERVICES DEPARTMENT**

**Child Support Enforcement Office**

Child support enforcement program:
- Indian Tribe and Tribal organization funding; comments due by 12-19-00; published 8-21-00

**HEALTH AND HUMAN SERVICES DEPARTMENT**

**Food and Drug Administration**

Medical devices:
- Anesthesiology devices—
  - Apnea monitor; special controls; comments due by 12-21-00; published 9-22-00

**HEALTH AND HUMAN SERVICES DEPARTMENT**
**Health Care Financing Administration**
Medicare:
Clinical social worker services; coverage and payment; comments due by 12-18-00; published 10-19-00

**HEALTH AND HUMAN SERVICES DEPARTMENT**
Medical facility construction and modernization:
Uncompensated services; compliance alternatives; comments due by 12-18-00; published 10-19-00

**INTERIOR DEPARTMENT**
**Indian Affairs Bureau**
Tribal government:
Certificate of degree of Indian or Alaska Native blood; documentation requirements and filing, processing, and issuing requirements and standards; comments due by 12-20-00; published 10-30-00

**INTERIOR DEPARTMENT**
**Fish and Wildlife Service**
Endangered and threatened species:
Recovery plans—
Zayante band-winged grasshopper; comments due by 12-21-00; published 12-6-00

**INTERIOR DEPARTMENT**
**Minerals Management Service**
Royalty management:
Rate relief or reduction; deep water royalty relief for post-2000 OCS oil and gas leases; comments due by 12-18-00; published 11-16-00
Correction; comments due by 12-18-00; published 11-22-00

**MANAGEMENT AND BUDGET OFFICE**
**Federal Procurement Policy Office**
Acquisition regulations:
Cost Accounting Standards Board—
Post retirement benefit plans sponsored by government contractors; cost accounting standard; comments due by 12-19-00; published 10-5-00

**PERSONNEL MANAGEMENT OFFICE**
Employment:
Reduction in force—
Retreat rights; comments due by 12-19-00; published 10-20-00

**SOCIAL SECURITY ADMINISTRATION**
Supplemental security income:
Aged, blind, and disabled—
Consumer reporting agencies information disclosure; administrative offset against Federal payment; comments due by 12-22-00; published 10-23-00

**TRANSPORTATION DEPARTMENT**
**Coast Guard**
Ports and waterways safety:
New York annual fireworks displays, NY; safety zones; comments due by 12-18-00; published 11-2-00

**TRANSPORTATION DEPARTMENT**
**Federal Aviation Administration**
Airworthiness directives:
Israel Aircraft Industries, Ltd.; comments due by 12-18-00; published 11-17-00
McDonnell Douglas; comments due by 12-20-00; published 11-20-00
Pratt & Whitney; comments due by 12-18-00; published 11-16-00
Airworthiness standards:
Special conditions—
Bombardier Model CL-600-2C10 series airplanes; comments due by 12-18-00; published 11-3-00
Class E airspace; comments due by 12-22-00; published 11-22-00
Commercial space transportation:
Launch site operation; licensing and safety requirements; solid propellants handling and cooperation with National Transportation Safety Board; comments due by 12-18-00; published 10-19-00

**TRANSPORTATION DEPARTMENT**
**National Highway Traffic Safety Administration**
Motor vehicle safety standards:
Child restraint systems—
Safety plan; comments due by 12-22-00; published 11-27-00

**TRANSPORTATION DEPARTMENT**
**Research and Special Programs Administration**
Hazardous materials:
Hazardous materials transportation—
Harmonization with UN recommendations, International Maritime Dangerous Goods Code, and International Civil Aviation Organization's Technical Instructions; comments due by 12-22-00; published 10-23-00

## LIST OF PUBLIC LAWS

This is a continuing list of public bills from the current session of Congress which have become Federal laws. It may be used in conjunction with "P L U S" (Public Laws Update Service) on 202–523–6641. This list is also available online at http://www.nara.gov/fedreg.

The text of laws is not published in the **Federal Register** but may be ordered in "slip law" (individual pamphlet) form from the Superintendent of Documents, U.S. Government Printing Office, Washington, DC 20402 (phone, 202–512–1808). The text will also be made available on the Internet from GPO Access at http://www.access.gpo.gov/nara/index.html. Some laws may not yet be available.

**H.J. Res. 128/P.L. 106–540**

Making further continuing appropriations for the fiscal year 2001, and for other purposes. (Dec. 8, 2000; 114 Stat. 2571)

**S. 2796/P.L. 106–541**

Water Resources Development Act of 2000 (Dec. 11, 2000; 114 Stat. 2572)

**Last List December 11, 2000**

## Public Laws Electronic Notification Service (PENS)

**PENS** is a free electronic mail notification service of newly enacted public laws. To subscribe, go to http://hydra.gsa.gov/archives/publaws-l.html or send E-mail to **listserv@listserv.gsa.gov** with the following text message:

**SUBSCRIBE PUBLAWS-L**
Your Name.

**Note:** This service is strictly for E-mail notification of new laws. The text of laws is not available through this service. **PENS** cannot respond to specific inquiries sent to this address.