AUTHENTICATED
U.S. GOVERNMENT
INFORMATION
GPO

Federal Register

12–11–00 Monday
Vol. 65 No. 238 Dec. 11, 2000
Pages 77245–77494

The **FEDERAL REGISTER** is published daily, Monday through Friday, except official holidays, by the Office of the Federal Register, National Archives and Records Administration, Washington, DC 20408, under the Federal Register Act (44 U.S.C. Ch. 15) and the regulations of the Administrative Committee of the Federal Register (1 CFR Ch. I). The Superintendent of Documents, U.S. Government Printing Office, Washington, DC 20402 is the exclusive distributor of the official edition.

The **Federal Register** provides a uniform system for making available to the public regulations and legal notices issued by Federal agencies. These include Presidential proclamations and Executive Orders, Federal agency documents having general applicability and legal effect, documents required to be published by act of Congress, and other Federal agency documents of public interest.

Documents are on file for public inspection in the Office of the Federal Register the day before they are published, unless the issuing agency requests earlier filing. For a list of documents currently on file for public inspection, see http://www.nara.gov/fedreg.

The seal of the National Archives and Records Administration authenticates the Federal Register as the official serial publication established under the Federal Register Act. Under 44 U.S.C. 1507, the contents of the **Federal Register** shall be judicially noticed.

The **Federal Register** is published in paper and on 24x microfiche. It is also available online at no charge as one of the databases on GPO Access, a service of the U.S. Government Printing Office.

The online edition of the **Federal Register** is issued under the authority of the Administrative Committee of the Federal Register as the official legal equivalent of the paper and microfiche editions (44 U.S.C. 4101 and 1 CFR 5.10). It is updated by 6 a.m. each day the **Federal Register** is published and it includes both text and graphics from Volume 59, Number 1 (January 2, 1994) forward.

GPO Access users can choose to retrieve online **Federal Register** documents as TEXT (ASCII text, graphics omitted), PDF (Adobe Portable Document Format, including full text and all graphics), or SUMMARY (abbreviated text) files. Users should carefully check retrieved material to ensure that documents were properly downloaded.

On the World Wide Web, connect to the **Federal Register** at http://www.access.gpo.gov/nara. Those without World Wide Web access can also connect with a local WAIS client, by Telnet to swais.access.gpo.gov, or by dialing (202) 512-1661 with a computer and modem. When using Telnet or modem, type swais, then log in as guest with no password.

For more information about GPO Access, contact the GPO Access User Support Team by E-mail at gpoaccess@gpo.gov; by fax at (202) 512–1262; or call (202) 512–1530 or 1–888–293–6498 (toll free) between 7 a.m. and 5 p.m. Eastern time, Monday–Friday, except Federal holidays.

The annual subscription price for the **Federal Register** paper edition is $638, or $697 for a combined **Federal Register,** Federal Register Index and List of CFR Sections Affected (LSA) subscription; the microfiche edition of the **Federal Register** including the Federal Register Index and LSA is $253. Six month subscriptions are available for one-half the annual rate. The charge for individual copies in paper form is $9.00 for each issue, or $9.00 for each group of pages as actually bound; or $2.00 for each issue in microfiche form. All prices include regular domestic postage and handling. International customers please add 25% for foreign handling. Remit check or money order, made payable to the Superintendent of Documents, or charge to your GPO Deposit Account, VISA, MasterCard or Discover. Mail to: New Orders, Superintendent of Documents, P.O. Box 371954, Pittsburgh, PA 15250–7954.

There are no restrictions on the republication of material appearing in the **Federal Register.**

How To Cite This Publication: Use the volume number and the page number. Example: 65 FR 12345.

SUBSCRIPTIONS AND COPIES

PUBLIC	
Subscriptions:	
Paper or fiche	**202–512–1800**
Assistance with public subscriptions	**512–1806**
General online information	**202–512–1530; 1–888–293–6498**
Single copies/back copies:	
Paper or fiche	**512–1800**
Assistance with public single copies	**512–1803**
FEDERAL AGENCIES	
Subscriptions:	
Paper or fiche	**523–5243**
Assistance with Federal agency subscriptions	**523–5243**

Printed on recycled paper.

Contents

Federal Register

Vol. 65, No. 238

Monday, December 11, 2000

Agricultural Marketing Service
PROPOSED RULES
Cherries (tart) grown in—
Michigan et al., 77323–77328

Agriculture Department
See Agricultural Marketing Service
See Food and Nutrition Service
See Forest Service
See Rural Utilities Service
NOTICES
Meetings:
Health and Nutrition Effects of Popular Weight-Loss Diets Research Program, 77340

Alcohol, Tobacco and Firearms Bureau
NOTICES
Agency information collection activities:
Proposed collection; comment request, 77426–77427

Bonneville Power Administration
NOTICES
Environmental statements; notice of intent:
Schultz-Hanford Area Transmission Line Project, WA, 77352

Commerce Department
See Economic Analysis Bureau
See Export Administration Bureau
See International Trade Administration
See National Oceanic and Atmospheric Administration
See Patent and Trademark Office

Committee for the Implementation of Textile Agreements
NOTICES
Cotton, wool, and man-made textiles:
Kenya, 77347–77348
Mauritius, 77348
Taiwan, 77349

Comptroller of the Currency
RULES
Practice and procedure:
Civil money penalties; inflation adjustment, 77250–77252

Copyright Office, Library of Congress
RULES
Copyright office and procedures:
Sound recordings, public performance; service definition, 77292–77302
PROPOSED RULES
Copyright office and procedures:
Sound recordings, public performance; service definition, 77330–77333
NOTICES
Copyright Arbitration Royalty Panel:
Digital performance right in sound and ephemeral recordings—
Copyright liability and precontroversy discovery schedule, 77393–77394

Drug Enforcement Administration
PROPOSED RULES
Schedules of controlled substances:
Dichloralphenazone; placement into List IV, 77328–77330

Economic Analysis Bureau
RULES
International services surveys:
BE-82; annual survey of financial services transactions between U.S. financial services providers and unaffiliated foreign persons, 77282–77285

Education Department
RULES
Special education and rehabilitative services:
Special Demonstration Programs, 77431–77436
NOTICES
Agency information collection activities:
Submission for OMB review; comment request, 77349–77350
Meetings:
Web-Based Education Commission, 77350

Employment Standards Administration
NOTICES
Agency information collection activities:
Proposed collection; comment request, 77392–77393

Energy Department
See Bonneville Power Administration
See Federal Energy Regulatory Commission
See Western Area Power Administration
NOTICES
Grants and cooperative agreements; availability, etc.:
Industries of the Future, Emerging Technology Deployment, 77350–77351
Power Plant Improvement Initiative, 77351–77352

Environmental Protection Agency
RULES
Air quality implementation plans; approval and promulgation; various States; air quality planning purposes; designation of areas:
Ohio, 77308–77318
Air quality implementation plans; approval and promulgation; various States:
California, 77307–77308
PROPOSED RULES
Air programs:
Outer Continental Shelf regulations—
California; consistency update, 77333–77338
Hazardous waste:
Identification and listing—
Exclusions; correction, 77429
NOTICES
Agency information collection activities:
Proposed collection; comment request, 77373–77374
Submission for OMB review; comment request, 77375
Air pollution control:
State operating permits programs—
Various States, 77376–77377

Toxic and hazardous substances control:
New chemicals—
Receipt and status information, 77377–77380

Equal Employment Opportunity Commission
RULES
Age Discrimination in Employment Act:
Rights and claims waivers; tender back of consideration, 77437–77447

Executive Office of the President
See Presidential Documents

Export Administration Bureau
NOTICES
Agency information collection activities:
Proposed collection; comment request, 77344–77345

Federal Aviation Administration
RULES
Airworthiness directives:
Bell, 77263–77282
Raytheon, 77259–77261
S.N. Centrair, 77261–77263
Airworthiness standards:
Special conditions—
Boeing Model 777-200 series airplanes, 77252–77259
Class E5 airspace, 77282

Federal Communications Commission
RULES
Radio stations; table of assignments:
California, 77318
Pennsylvania, 77318–77319
PROPOSED RULES
Radio stations; table of assignments:
Colorado, 77338
NOTICES
Agency information collection activities:
Proposed collection; comment request, 77380
Reporting and recordkeeping requirements, 77381
Meetings:
Market entry barriers; policy forum, 77381

Federal Emergency Management Agency
NOTICES
Disaster and emergency areas:
Hawaii, 77381–77382
Oklahoma, 77382

Federal Energy Regulatory Commission
RULES
Natural Gas Policy Act:
Interstate natural gas pipelines—
Business practice standards, 77285–77292
NOTICES
Electric rate and corporate regulation filings:
Dynegy Midwest Generation, Inc., et al., 77362–77364
Environmental statements; availability, etc.:
Indiana Michigan Power Co., 77364
Hydroelectric applications, 77364–77365
Meetings; Sunshine Act, 77365–77368
Applications, hearings, determinations, etc.:
Algonquin Gas Transmission Co., 77353
Bitter Creek Pipelines, LLC, 77353–77354
Chandeleur Pipe Line Co., 77354
Colorado Interstate Gas Co., 77354
Columbia Gulf Transmission Co., 77354–77355
El Paso Natural Gas Co., 77355
Florida Gas Transmission Co., 77355–77356
Great Lakes Gas Transmission L.P., 77356
Iroquois Gas Transmission System, L.P., 77356
Kinder Morgan Interstate Gas Transmission LLC, 77356–77357
KN Wattenberg Transmission L.L.C., 77357
Koch Gateway Pipeline Co., 77357
Mississippi River Transmission Corp., 77357–77358
National Fuel Gas Supply Corp., 77358
PG&E Gas Transmission, Northwest Corp., 77358
Southern Natural Gas Co., 77358–77359
Tennessee Gas Pipeline Co., 77360
Texas Gas Transmission Corp., 77360–77361
Transcontinental Gas Pipe Line Corp., 77361
Transwestern Pipeline Co., 77361
Williams Gas Pipelines Central, Inc., 77361–77362

Federal Motor Carrier Safety Administration
NOTICES
Motor carrier safety standards:
Driver qualifications—
Aalvik, Darryl P., et al.; vision requirement exemptions denied, 77473–77484

Food and Drug Administration
NOTICES
Agency information collection activities:
Reporting and recordkeeping requirements, 77383
Submission for OMB review; comment request, 77383–77384

Food and Nutrition Service
RULES
Child nutrition programs:
Women, infants, and children; special supplemental nutrition program—
Certification integrity, 77245–77250

Forest Service
NOTICES
Environmental statements; notice of intent:
Helena National Forest, MT, 77340–77342
Meetings:
Opal Creek Scenic Recreation Area Advisory Council, 77342–77343

Geological Survey
NOTICES
Agency information collection activities:
Submission for OMB review; comment request, 77386

Health and Human Services Department
See Food and Drug Administration
See Substance Abuse and Mental Health Services Administration
NOTICES
Scientific misconduct findings; administrative actions:
Hartzer, Michael K., 77383

Interior Department
See Geological Survey
See Land Management Bureau
See National Park Service
See Reclamation Bureau
NOTICES
Boundary establishment, descriptions, etc.:
Sandia Pueblo Grant, NM; eastern boundary survey, 77385–77386

Environmental statements, notice of intent:
Central Utah Project—
Strawberry Valley Project; conversion of portion of water from irrigation to municipal and industrial use, 77386

International Trade Administration
NOTICES
Export trade certificates of review, 77345–77347

Justice Department
See Drug Enforcement Administration

Labor Department
See Employment Standards Administration
See Mine Safety and Health Administration
NOTICES
Agency information collection activities:
Submission for OMB review; comment request, 77391–77392

Land Management Bureau
NOTICES
Agency information collection activities:
Proposed collection; comment request, 77386–77389
Realty actions; sales, leases, etc.:
Alaska, 77389
Nevada, 77389–77390

Library of Congress
See Copyright Office, Library of Congress

Mine Safety and Health Administration
RULES
Education and training:
Hazard communication (HazCom)
Hearing, 77292

National Credit Union Administration
NOTICES
Meetings; Sunshine Act, 77394

National Highway Traffic Safety Administration
PROPOSED RULES
Reports and guidance documents; availability, etc.:
Transportation Recall Enhancement, Accountability, and Documentation (TREAD); insurance study, 77339

National Oceanic and Atmospheric Administration
RULES
Fishery conservation and management:
Northeastern United States fisheries—
Atlantic herring, 77449–77472

National Park Service
NOTICES
National Register of Historic Places:
Pending nominations, 77390

Nuclear Regulatory Commission
NOTICES
Environmental statements; availability, etc.:
Commonwealth Yankee Atomic Power Co. et al., 77394–77395

Patent and Trademark Office
NOTICES
Hague Conference on Private International Law; jurisdiction and foreign judgments in civil and commercial matters; convention; comment request, 77347

Pension Benefit Guaranty Corporation
RULES
Multiemployer and single-employer plans:
Premium payments
Correction, 77429

Postal Service
RULES
International Mail Manual:
Global Express Guaranteed services; postal rate changes, 77302–77307

Presidential Documents
EXECUTIVE ORDERS
Nuclear weapons workers, providing compensation for (EO 13179), 77485–77490
Traffic Organization; establishment (EO 13180), 77491–77494

Public Health Service
See Food and Drug Administration
See Substance Abuse and Mental Health Services Administration

Reclamation Bureau
NOTICES
Environmental statements; availability, etc.:
Keechelus Dam, Yakima Project, WA; dams modification safety, 77390–77391

Research and Special Programs Administration
NOTICES
Hazardous materials transportation:
Preemption determinations—
Kiesel Co., 77417–77419
Pipeline safety; waiver petitions:
Duke Energy, 77419–77422
Tennessee Gas Pipeline Co., 77422–77424

Rural Utilities Service
NOTICES
Reports and guidance documents; availability, etc.:
Electric utility applications; combustion turbines; environmental effects, 77343–77344

Securities and Exchange Commission
NOTICES
Agency information collection activities:
Proposed collection; comment request, 77395
Investment Company Act of 1940:
Shares substitution applications—
AIG Life Insurance Co. et al., 77399–77402
American United Life Insurance Co. et al., 77396–77399
Self-regulatory organizations; proposed rule changes:
Chicago Board Options Exchange, Inc., 77403–77405
National Association of Securities Dealers, Inc., 77405–77407
New York Stock Exchange, Inc., 77407–77413
Options Clearing Corp., 77413
Philadelphia Stock Exchange, Inc., 77413–77416
Philadelphia Stock Exchange, Inc.; correction, 77429
Applications, hearings, determinations, etc.:
Public utility holding company filings, 77395–77396

State Department
NOTICES
Committees; establishment, renewal, termination, etc.:
Shipping Coordinating Committee, 77416

Meetings:
Shipping Coordinating Committee, 77416–77417

Substance Abuse and Mental Health Services Administration
NOTICES
Meetings:
SAMHSA Special Emphasis Panels, 77384

Surface Transportation Board
RULES
Fees:
Licensing and related services; 2000 update, 77319–77322
NOTICES
Railroad operation, acquisition, construction, etc.:
Texas Pacifico Transportation, Ltd., 77425

Textile Agreements Implementation Committee
See Committee for the Implementation of Textile Agreements

Thrift Supervision Office
NOTICES
Agency information collection activities:
Proposed collection; comment request, 77427–77428

Transportation Department
See Federal Aviation Administration
See Federal Motor Carrier Safety Administration
See National Highway Traffic Safety Administration
See Research and Special Programs Administration
See Surface Transportation Board

Treasury Department
See Alcohol, Tobacco and Firearms Bureau
See Comptroller of the Currency
See Thrift Supervision Office
NOTICES
Agency information collection activities:
Submission for OMB review; comment request, 77425–77426

Western Area Power Administration
NOTICES
Power rate adjustments:
Central Arizona Project, 77368–77372
Salt Lake City Area Integrated Projects; firm power rate formula adder, 77372–77373

Separate Parts In This Issue

Part II
Department of Education, 77431–77436

Part III
Equal Employment Opportunity Commission, 77437–77447

Part IV
Department of Commerce, National Oceanic and Atmospheric Administration, 77449–77472

Part V
Department of Transportation, Federal Motor Carrier Safety Administration, 77473–77484

Part VI
The President, 77485–77490

Part VII
The President, 77491–77494

Reader Aids
Consult the Reader Aids section at the end of this issue for phone numbers, online resources, finding aids, reminders, and notice of recently enacted public laws.

CFR PARTS AFFECTED IN THIS ISSUE

A cumulative list of the parts affected this month can be found in the Reader Aids section at the end of this issue.

3 CFR
Executive Order
13179 77487
Executive Order
13180 77493

7 CFR
246.....77245
Proposed Rules:
930.....77323

12 CFR
19.....77250

14 CFR
25.....77252
39 (3 documents) 77259, 77261, 77263
71.....77282

15 CFR
801.....77282
902.....77450

18 CFR
284.....77285

21 CFR
Proposed Rules:
1308.....77328

29 CFR
1625.....77438
4006.....77429
4007.....77429

30 CFR
42.....77292
47.....77292
56.....77292
57.....77292
77.....77292

34 CFR
373.....77432

37 CFR
201.....77292
Proposed Rules:
201.....77330

39 CFR
20.....77302

40 CFR
52 (2 documents) 77307, 77308
81.....77308
Proposed Rules:
55.....77333
261.....77429

47 CFR
73 (2 documents) 77318
Proposed Rules:
73.....77338

49 CFR
1002.....77319
Proposed Rules:
571.....77339

50 CFR
600.....77450
648 (2 documents) 77450, 77470

Rules and Regulations

Federal Register
Vol. 65, No. 238
Monday, December 11, 2000

This section of the FEDERAL REGISTER contains regulatory documents having general applicability and legal effect, most of which are keyed to and codified in the Code of Federal Regulations, which is published under 50 titles pursuant to 44 U.S.C. 1510.

The Code of Federal Regulations is sold by the Superintendent of Documents. Prices of new books are listed in the first FEDERAL REGISTER issue of each week.

DEPARTMENT OF AGRICULTURE

Food and Nutrition Service

7 CFR Part 246

RIN 0584–AC76

Special Supplemental Nutrition Program for Women, Infants and Children (WIC): Certification Integrity

AGENCY: Food and Nutrition Service, USDA.

ACTION: Final rule.

SUMMARY: This final rule adopts an interim rule amending 7 CFR part 246 which was published on January 21, 2000, at 65 FR 3375 for the Special Supplemental Nutrition Program for Women, Infants and Children (WIC). The interim rule and this final rule implement three legislative requirements that affect the application and certification process for the WIC Program. These legislative requirements can be found in the William F. Goodling Child Nutrition Reauthorization Act of 1998. In addition, this final rule implements several nondiscretionary legislative requirements in the Agricultural Risk Protection Act of 2000 that also affect the WIC application and certification process. One of these provisions was subsequently amended by the Grain Standards and Warehouse Improvement Act of 2000, Public Law 106–472, enacted November 9, 2000. Therefore, this final rule adopts requirements that WIC applicants, except in limited circumstances, present documentation of family income at certification for those individuals who are not certified based on adjunctive income eligibility procedures; present proof of residency as part of a State agency's system to prevent dual participation; and, physically present themselves at certification. In addition, this final rule allows individuals residing in a remote Indian or Native village or served by an Indian tribal organization and residing on a reservation or pueblo, to provide the name of the village and mailing address as proof of residency, and defines ''remote Indian or Native village.'' Further, this final rule provides State agencies, in determining an applicant's eligibility for WIC, the option to exclude from consideration as income any cost-of-living allowance provided to military personnel who are on duty outside the contiguous United States. The intent of these provisions is to strengthen the integrity of the WIC certification process and to consider the needs of special populations in determining eligibility for the WIC Program.

EFFECTIVE DATE: This rule is effective January 10, 2001.

FOR FURTHER INFORMATION CONTACT: Debbie Whitford at (703) 305–2746 during regular business hours (8:30 a.m. to 5 p.m.) Monday through Friday.

SUPPLEMENTARY INFORMATION:

1. Why is This Regulation Necessary?

On January 21, 2000, the Department published an interim rule at 65 FR 3375 to implement three legislative requirements in the William F. Goodling Child Nutrition Reauthorization Act of 1998, Public Law 105–336, 112 Stat. 3143, enacted October 31, 1998, which affect the application and certification process. These provisions include, with limited exceptions, that WIC agencies require WIC applicants and participants to: (1) Provide proof or documentation of family income in cases where an individual is not determined adjunctively or automatically income eligible; (2) provide proof or documentation of an applicant's residency; and (3) physically present themselves at the WIC clinic at certification. Comments were requested by the Department on the interim rule. Comments received on the interim rule are discussed below.

Subsequently, legislation was enacted on June 20, 2000, the Agricultural Risk Protection Act of 2000, Public Law 106–224, 114 Stat. 224, which includes several nondiscretionary provisions that also affect the WIC application and certification process. One of these provisions was subsequently amended by the Grain Standards and Warehouse Improvement Act of 2000, Public Law 106–472, 114 Stat. 2058, enacted on November 9, 2000. The Agricultural Risk Protection Act of 2000 allows individuals residing in a remote Indian or Native village or served by an Indian tribal organization and residing on a reservation or pueblo, to provide their mailing address and name of the remote Indian or Native village as proof of residency. This legislation defines ''remote Indian or Native village.'' The Agricultural Risk Protection Act of 2000, subsequently amended by the Grain Standards and Warehouse Improvement Act of 2000, also provides State agencies, in determining an applicant's eligibility for WIC, the option to exclude from consideration as income any cost-of-living allowance provided to military personnel who are on duty outside the contiguous United States. These requirements, as set forth in this final rule, are reproduced verbatim from the legislation. Thus, they are considered nondiscretionary provisions.

Section 263 of the Agricultural Risk Protection Act of 2000 requires that FNS promulgate regulations to implement the provisions as soon as practicable after the date of enactment without regard to the Administrative Procedure Act's notice and comment provisions (5 U.S.C. 553); the State of Policy of the Secretary of Agriculture relating to notices of proposed rulemaking and public participation in rulemaking effective July 24, 1971 (36 FR 13804); and the Paperwork Reduction Act (44 U.S.C., chapter 35). In addition, section 172 of Public Law 106–224 requires us to promulgate regulations to carry out the Act and its amendments not later than 120 days after the date of enactment, June 20, 2000. For these reasons, and because we are obligated by law and have exercised no discretion in making the amendments set forth by Public Law 106–224, we are not taking public comment prior to promulgation of this final rule.

2. What Comments Were Received on the Interim Rule and What Provisions Have Been Added as a Result of New Legislation?

A total of 24 comment letters, faxes and emails were received on the interim rule published on January 21, 1999, at 65 FR 3375. Commenters were primarily WIC State and local agencies and staff. Other commenters represented industry, a professional health or nutrition-related group, and the general public. In

general, some commenters supported the legislative measures to improve the integrity of the WIC Program. However, the majority of commenters opposed various aspects of the requirements in the interim rule, primarily the requirements mandated by law. In addition, some commenters recommended changes to WIC eligibility, and certification requirements that were not addressed in the interim rule such as what is counted as income for WIC eligibility purposes.

The Department has carefully considered all comments in the development of this final rule and would like to thank all agencies, organizations and individuals that responded to the request for comments on the interim rule. The Department does not have the authority to eliminate or revise legislative requirements, or change other WIC requirements not addressed in the interim rule without first issuing proposed regulations and affording the public the opportunity to comment on the proposal. There are, however, several issues that need clarification, given the comments received. The following is a discussion of each provision, clarifications needed as a result of comments received, an explanation of the three nondiscretionary certification provisions contained in Public Law 106–224, with one provision subsequently amended by Pub. L. 106–472, and an explanation of the provisions in this final rule.

a. Definitions—§ 246.2

In the interim rule, the Department added new definitions for ''Applicants,'' ''Documentation'' and ''Individual with disabilities.'' One commenter recommended that the definition of ''documentation'' include cases where the local agency assists in obtaining the documentation such as contacting the Medicaid Program to establish eligibility for WIC adjunct income eligibility purposes. It is the Department's intention that the definition of ''documentation'' include situations where the applicant may bring in written information to confirm verbal statements or include, where feasible, the WIC clinic assisting the client in obtaining the required written documents. For example, WIC staff could contact the Medicaid Program or access Medicaid eligibility information to confirm that the applicant is adjunctively or automatically income eligible for WIC. No comments were received on the definitions of ''Applicants'' and ''Individual with disabilities.'' As such, the three definitions included in the interim rule are not changed in this final rule.

Further, a new definition of ''remote Indian or Native village'' has been added as a result of the Agricultural Risk Protection Act of 2000, Public Law 106–224, 114 Stat. 224, Section 244(a). As noted below, this law adds an additional exception to the proof of residency requirement for individuals residing in a remote Indian or Native village. Therefore, as defined in the Act, ''remote Indian or Native village'' means an Indian or Native village that: (1) Is located in a rural area; (2) has a population of less than 5,000 inhabitants; and, (3) is not accessible year-around by means of a public road, as defined in section 101 of title 23 of the United States Code (U.S.C.). Section 101 of title 23 of the U.S.C. defines public road as ''* * * any road or street under the jurisdiction of and maintained by a public authority and open to public travel.'' Accordingly, § 246.2 adds a new definition of ''remote Indian or Native village.''

b. Documentation of Family Income—§ 246.7(d)(2)(v)

The interim rule established, in accordance with legislation, that applicants, except those deemed adjunctively income eligible, must provide documentation of family income with limited exceptions. The limited exceptions include: (1) An individual for whom the necessary documentation is not available; or, (2) an individual, such as a homeless woman or child, for whom the agency determines the requirement would present an unreasonable barrier to participation. The Department also clarified in the interim rule that certain instream migrant farmworkers and their family members with expired Verification of Certification cards shall satisfy the State agency's income standard and income documentation requirements. The interim rule also addressed the Department's intent to continue to include a provision which affords State and local agencies the authority to verify an applicant's income, that is validating information provided by the applicant through an external source other than the applicant.

One commenter recommended the exceptions to the provision of documentation include individuals that have lost everything due to theft, fire, flood or other disaster. This example clearly falls within the parameters of one of the exceptions set forth in the legislation, that is an individual for whom the necessary documentation is not available.

One commenter recommended that all sources of family income be documented, not just income of one family member. It has been the Department's and State and local agencies' longstanding policy that all sources and amounts of family income are identified in determining WIC income eligibility.

Given the comments received and clarifications noted above, the interim requirements pertaining to the documentation of income are unchanged in this final rule.

c. Exclusion From Income—§ 246.7(d)(2)

Section 244(b) of Public Law 106–224 amended section 17(d)(2)(B) of the Child Nutrition Act (CNA) to make a technical correction. The technical correction is made to a provision which permits State agencies to exclude from income, in determining WIC eligibility, any basic allowance for quarters received by military personnel residing off military installations. First, Section 244(b) changes the reference from ''basic allowance for quarters'' to ''basic allowance for housing.'' This change is necessary and consistent with a revision in the terminology used in referring to this military allowance. Second, Section 244(b) of Public Law 106–224, subsequently amended by Section 307(b)(1) of Public Law 106–472, adds at the end of section 17(d)(2)(B) of the CNA a new provision. Under this provision, State agencies may choose to exclude, in determining WIC income eligibility, any cost-of-living allowance (COLA) provided under section 405 of title 37 of the United State Code, to a member of a uniformed service who is on duty outside the contiguous states of the United States. This allowance is referred to as the overseas continental United States (OCONUS) COLA.

The OCONUS COLA is provided to active duty uniformed service members in designated overseas high-cost areas including Hawaii, Alaska and Guam. Ultimately, the decision to choose whether to exclude the OCONUS COLA in determining WIC income eligibility affects all WIC State agencies. This is the case because some members of a military family may remain stateside and apply and/or participate in WIC while a family member on duty overseas receives the OCONUS COLA. In areas outside the contiguous U.S., such as Hawaii, Alaska and Guam, only one COLA is provided to active duty military personnel stationed in these locations, that is the OCONUS COLA. Therefore, each WIC State agency in which applying members of a military family reside within its borders must determine whether it will include or

exclude the OCONUS COLA provided to the family member who is stationed in a designated overseas high-cost area in determining WIC income eligibility. The determination to include or exclude the OCONUS COLA needs to be addressed in each State agency's policy and procedures manual.

While State agencies may choose to exclude the OCONUS COLA in determining WIC income eligibility, the amendments made by Public Laws 106–224 and 106–472 do not authorize or permit State agencies to choose whether to exclude the COLA provided to military personnel in designated high-cost areas within the continental United States. This allowance is referred to as the Continental United States (CONUS) COLA. Therefore, in all cases where a military family receives the CONUS COLA, the amount must be counted as income in determining WIC eligibility.

In reviewing military pay stubs, while some variation may exist to reflect the COLA, generally, the military pay stubs will identify whether a COLA is provided to a military person, either as an OCONUS OCOLA or a CONUS COLA. All Marines' pay stubs, whether they receive or do not receive a CONUS COLA, will reflect in the remarks section of the pay stub that the Marine is entitled to CONUS COLA; computed amount is reflected as ''O'' or a specific dollar amount. As indicated above, if a military family member applies for WIC and a household member receives a CONUS COLA, the amount received must be counted in determining WIC income eligibility.

Accordingly, § 246.7(d)(2)(iv)(A) is revised to change the reference from ''basic allowance for quarters'' to ''basic allowance for housing.'' This section also adds the option that State agencies may choose to exclude any cost-of-living allowance provided to military personnel on duty outside the contiguous United States.

d. Dual Participation Prevention—Proof of Residency—§ 246.7(l)(2)

Public Law 105–336 addresses a renewed emphasis on State and local agencies' systems for detecting dual participation. Therefore, the interim rule, at § 246.7(l)(2), added a requirement, in addition to checking identity at certification, that State and local agencies must require each applicant at certification to present proof of residency, that is the location or address where the applicant routinely lives or spends the night. As noted, for an infant or child applicant, documentation of residency must be provided for the person with whom the infant or child resides. Further, the requirement to provide documentation of residency also applies to a person who transfers from another area or State and presents a valid Verification of Certification (VOC) card at a new WIC site. As indicated in the interim rule, a post office box does not constitute sufficient documentation of residency.

Some commenters opposed the requirement for various reasons. For example, WIC commenters indicated that WIC applicants may forget to bring in documentation or bills may not be in the name of the applicant. However, a greater, overriding factor is the need to detect and prevent dual participation. The collection of such information is an important data element in identifying dual participation and necessary to improve the integrity of the WIC Program. Further, sufficient flexibility exists for State agencies in developing procedures in this area. For example, we support a commenter's suggestion that ''location'' should also mean, for example, directions on a map where the applicant routinely lives or spends the night. Such procedures may be necessary, for example, in areas/towns where only post office boxes exist or in rural areas where there are no street names.

Some commenters expressed concern that some applicants may view and misinterpret the requirement as requiring proof of citizenship or alien status. We strongly encourage State and local agencies to ensure any program eligibility information to WIC applicants and participants reflects the true intent of this requirement. While for WIC regulatory and policy purposes, the Department refers to this requirement as proof of residency, WIC applicants need to understand they are being asked to provide documentation of where they routinely live or spend the night. Such clarification is extremely important to ensure misunderstanding or miscommunication of the requirement does not create a barrier to WIC participation.

The residency requirement, i.e., the location or address where the applicant routinely lives or spends the night, has no durational aspect. That is, there is no requirement on the length of time an applicant must reside at the location or address where he/she routinely lives or spends the night.

Accordingly, the general requirements pertaining to documentation of residency, as set forth in the interim rule, are retained in this final rule.

(1) Special Residency Procedures

As specified in the preamble to the interim rule, current WIC regulations at section 246.7(c)(1) require all State agencies, except Indian State agencies to require applicants to reside within the jurisdiction of the State. WIC regulations authorize Indian/Native American State agencies to establish a requirement for applicants to reside within their area or legal jurisdiction.

Further, State agencies may also establish a local service area residency requirement. The residency requirement has no durational or formal legal aspect and need to represent a legal residence. Also, length of residency cannot be a prerequisite to receiving WIC benefits.

No comments were received on these current WIC residency requirements. Therefore, these requirements are retained in WIC regulations and policy.

(2) Exceptions to the Identity and Residency Documentation Requirements

As set forth in the interim rule in § 246.7(l)(2), State agencies are permitted, when no proof of residency or identity exists, to exempt an applicant from the residency and/or identity documentation requirements. In such cases, at a minimum, State or local agencies must require the applicant to confirm in writing his/her residency or identity. As noted in the interim rule, applicants to whom an exemption may apply include a victim of theft, loss, or disaster; a homeless individual; or, a migrant farm worker. No comments were received on this portion of the interim rule. Therefore, this final rule retains these requirements.

However, sections 244(a) and (c) of Public Law 106–224 have included an additional nondiscretionary exemption from the residency requirement. Section 244(c) of the law permits an individual residing in a remote Indian or Native village, or an individual served by an Indian tribal organization and residing on a reservation or pueblo, to establish proof of residency by providing to the State agency the mailing address of the individual and the name of the remote Indian or Native village. The Department has determined that no additional requirements or standards, as authorized by the Public Law 106–224, are necessary to implement this requirement. Accordingly, at the end of § 246.7(l)(2), a new sentence has been added to reflect this legislative provision.

e. Physical Presence—§ 246.7(p)

Many commenters opposed the general requirement set forth in Public Law 105–335 that individuals seeking participation in the WIC Program must be physically present at the initial WIC certification and subsequent recertifications, except in certain limited circumstances. Some

commenters recommended additional exemptions beyond those permitted by the legislation, such as permitting a non-WIC entity/individual such as any health professional, to confirm or verify an individual's physical presence. As indicated previously, the Department does not have the authority to change or expand legislative requirements. Further, the legislative mandate reinforces the Department's long-standing position that the physical presence of an individual at certification is basic to WIC Program effectiveness.

The Department wishes to emphasize, as set forth in the preamble to the interim rule, that although an applicant may be exempt from the physical presence requirement, State and local agencies must ensure that all necessary information and documentation, including income, residency, identity, and nutrition risk, are provided in order to make a WIC eligibility determination in the absence of the applicant. The applicant's parent, caretaker or proxy can bring in the documents necessary to determine eligibility for WIC.

Therefore, the general requirement that individuals must be physically present at the initial WIC certification and subsequent recertifications, except in certain limited circumstances as discussed below, has been retained in this final rule.

(1) Mandatory Exception to the Physical Presence Requirement Due to a Disability

As set forth in Public Law 105–336 and the interim rule, State and local agencies are required to exempt from the physical presence requirement applicants who are qualified individuals with disabilities and are unable to be physically present at the WIC clinic because of their disabilities. The interim rule further clarified that this requirement also applies to applicants whose parents or caretakers are individuals with disabilities that meet this standard. The interim rule set forth examples of situations that would warrant an exception to the physical presence requirement due to a disability. Those examples included: (1) A medical condition that necessitates the use of medical equipment that is not easily transportable; (2) a medical condition that requires confinement to bed rest; and (3) a serious illness that may be exacerbated by coming in to the WIC clinic.

One commenter supported the exceptions for disability and indicated the exceptions were reasonable and represented current State agency practices. Another commenter recommended that the regulatory text be revised to include an example of a highly contagious illness that may be readily communicated to others. The interim rule and regulatory text set forth examples of situations that warranted an exception due to a disability. Therefore, some State agency flexibility exists to identify other potential conditions similar to those cited in the interim rule. Certainly, an individual with a highly contagious illness most likely would require confinement to bed rest and/or the condition may be exacerbated by coming in to the WIC clinic. Therefore, such a situation may fall under one or more of the examples set forth in the interim rule.

Further, another commenter recommended that if a person meets the conditions and is unable to be physically present, that the State or local agency should permit a caregiver or representative to present documentation of income, residency, and bloodwork data. This is the Department's intent with regard to implementation of this exception. While the applicant may be determined to be exempt from the physical presence requirement, State and local agencies would need to schedule an appointment for another family member, caregiver or representative to bring in all documents and information necessary to determine the applicant's eligibility for the WIC Program.

As indicated in the interim rulemaking, all persons with disabilities are not automatically exempt from the physical presence requirement. Only those disabilities that create a current barrier to the physical presence requirement may serve as a basis for an exception from the requirement.

Accordingly, as set forth in the interim rule, section 246.7(p)(2)(i) is retained in this final rule.

(2) State Agency Option To Exempt Certain Infants and Children From the Physical Presence Requirement

Public Law 105–336, and the interim rule, provide State agencies the option, if physical presence would present an unreasonable barrier to participation, to exempt certain infants or children from the physical presence requirement in the following situations:

An infant or child:

- Who was present at his/her initial WIC certification; and,
- Has documented ongoing health care from a provider other than the local agency; or

An infant or child:

- Who was present at his/her initial WIC certification; and
- Was present at a WIC certification or recertification determination within the 1-year period ending on the date of the most recent certification or recertification determination; and,
- Is under the care of one or more working parents or one or more primary working caretakers whose working status presents a barrier to bringing the infant or child in to the WIC clinic.

Several comments were received on the option to exempt an infant or child with ongoing health care. One commenter recommended this option be extended to children in foster or shelter care. Others opposed the provision because the provider of the health care must be an entity other than the WIC local agency. However, as indicated previously, the Department does not have the authority to expand the option or exclude one or more aspects of the requirement because they are specified in law. One commenter expressed concern that under this option, an infant could present soon after birth and never have to physically present again at a WIC certification. We support the concern raised by the commenter and would encourage WIC State agencies to consider this issue in the development of policy. A limit on the number of consecutive times this option could be used may be appropriate, as in the case identified by the commenter. This option, as set forth in the interim rule, is retained in this final rule.

Several commenters also opposed the option to exempt an infant or child of working parents. Reasons cited by commenters for opposing the provision include that it will confuse working parents, it will be difficult for parents to meet the initial physical presence requirement, and the option fails to address an essential requirement that the infant or child have ongoing health care. Because the option, as noted above, is reproduced in the regulations verbatim from the legislation, the Department does not have the authority to change or revise the option.

However, given comments received on this provision, several clarifications are necessary with regard to this option. First, as a commenter noted, the requirement that the infant or child must have been present within a 1-year period does mean that an infant or child must have been physically present at a WIC certification at least once in the previous 12 months. Second, the report language which accompanies Public Law 105–336 specifies that the exemption for working parents means that in families where there are two parents or caretakers, both individuals must be working in order for the option to apply. The exception for one working parent in the legislation and the interim

rule refers to households where there is only one parent or caretaker.

As indicated above, commenters expressed concerns with both options for exempting an infant or child. However, the Department would emphasize that these are options that the State agency can determine whether or not to implement. State agencies are not required to implement these provisions. Therefore, for the reasons stated above, the option to exclude an infant or child in the case of working parents or caretakers is retained in this final rule, as set forth in the interim rule.

f. Certification Forms—§ 246.7(i)

Section 246.7(i)(3)–(i)(5) of the interim rule specifies that the certification form, which may be either paper or electronic, must reflect the type of document(s) used to determine or confirm income eligibility, residency and identity or include a copy of the document(s) in the file. Further, in those cases where there is no proof of income, the file must include a copy of the written statement by the applicant indicating why he/she cannot provide documentation of income, and in applicable cases, specify if the applicant has no income. Further, this section also requires an indication of whether the applicant is physically present at certification. Such an indication may consist of simply checking off an appropriate annotated box on a paper or electronic form. If that applicant is not physically present, the form must indicate the reason why an exception was granted or a copy of a document(s) must be placed in the file that explains the reason for the exception.

Several commenters opposed the requirements for State and local agencies to reflect the types of documents used to confirm income and residency. However, the Department believes these requirements are necessary to ensure the integrity of the WIC certification process. State agencies have been encouraged to adopt procedures to meet this requirement in a manner that imposes the least administrative burden on WIC clinic staff.

3. Procedural Matters

Executive Order 12866

This final rule has been determined to be not significant for purposes of Executive Order 12866 and, therefore, has not been reviewed by the Office of Management and Budget.

Regulatory Flexibility Act

This rule has been reviewed with regard to the requirements of the Regulatory Flexibility Act (5 U.S.C. 601–612). Pursuant to that review, Samuel Chambers, Jr., Administrator, Food and Nutrition Service, has certified that this rule would not have a significant impact on a substantial number of small entities. This rule would modify WIC certification procedures. Therefore, the effect of these changes would be primarily on State and local WIC agencies, some of which are small entities. However, the impact on small entities is not expected to be significant.

Executive Order 12372

The WIC Program is listed in the Catalog of Federal Domestic Assistance Programs under 10.557. For the reasons set forth in the final rule in 7 CFR part 3015, Subpart V, and related Notice (48 FR 29115), this program is included in the scope of Executive Order 12372 which requires intergovernmental consultation with State and local officials.

Executive Order 12988

This final rule has been reviewed under Executive Order 12988, Civil Justice Reform. This final rule is intended to have preemptive effect with respect to any State or local laws, regulations or policies which conflict with its provisions or which would otherwise impede its full implementation. This rule is not intended to have retroactive effect unless so specified in the **EFFECTIVE DATE** section of the preamble of this final rule. Prior to any judicial challenge to the application of the provisions of the final rule, all applicable administrative procedures must be exhausted.

Public Law 104–4

Title II of the Unfunded Mandates Reform Act of 1995 ((UMRA) (2 U.S.C. 1531–38)) establishes requirements for Federal agencies to assess the effects of their regulatory actions on State, local and tribal governments and the private sector. Under section 202 of the UMRA, the Food and Nutrition Service (FNS) generally must prepare a written statement, including a cost benefit analysis, for proposed and final rules with ''Federal mandates'' that may result in expenditures to State, local or tribal governments, in the aggregate, or the private sector, of $100 million or more in any one year. When such a statement is needed for a rule, section 204 of the UMRA generally requires FNS to identify and consider a reasonable number of regulatory alternatives and adopt the most cost effective or least burdensome alternative that achieves the objectives of the rule.

This final rule contains no Federal mandates (under the regulatory provisions of Title II of the UMRA) for State, local and tribal governments or the private sector of $100 million or more in any one year. Thus, the rule is not subject to the requirements of sections 202 and 205 of the UMRA.

Paperwork Reduction Act of 1995

This regulation contains information collection that is subject to review and approval by the Office of Management and Budget. The information collection contained in Section 246.7 (i)(3)—(i)(5) of this regulation is approved under OMB No. 0584–0043.

List of Subjects in 7 CFR Part 246

Food assistance programs, Food donations, Grant programs—Social programs, Indians, Infants and children, Maternal and child health, Nutrition education, Public assistance programs, WIC, Women.

Accordingly, the interim rule amending 7 CFR Part 246 which was published at 65 FR 3375 on January 21, 2000, is adopted as a final rule with the following changes:

PART 246—SPECIAL SUPPLEMENTAL NUTRITION PROGRAM FOR WOMEN, INFANTS AND CHILDREN

1. The authority citation for part 246 continues to read as follows:

Authority: 42 U.S.C. 1786.

2. In § 246.2, add a new definition of *Remote Indian or Native village* in alphabetical order to read as follows:

§ 246.2 Definitions.

* * * * *

Remote Indian or Native village means an Indian or Native village that is located in a rural area, has a population of less than 5,000 inhabitants, and is not accessible year-round by means of a public road (as defined in 23 U.S.C. 101).

* * * * *

3. In § 246.7, revise paragraphs (d)(2)(iv)(A) and (l)(2) to read as follows:

§ 246.7 Certification of participants.

* * * * *

(d) * * *

(2) * * *

(iv) * * *

(A) In determining income eligibility, the State agency may exclude from consideration as income any:

(*1*) Basic allowance for housing received by military services personnel residing off military installations; and

(*2*) Cost-of-living allowance provided under 37 U.S.C. 405, to a member of a

uniformed service who is on duty outside the contiguous states of the United States.

* * * * *

(l) * * *

(2) At certification, the State or local agency must require each applicant to present proof of residency (*i.e.,* location or address where the applicant routinely lives or spends the night) and proof of identity. The State or local agency must also check the identity of participants, or in the case of infants or children, the identity of the parent or guardian, or proxies when issuing food or food instruments. The State agency may authorize the certification of applicants when no proof of residency or identity exists (such as when an applicant or an applicant's parent is a victim of theft, loss, or disaster, a homeless individual, or a migrant farmworker). In these cases, the State or local agency must require the applicant to confirm in writing his/her residency or identity. Further, an individual residing in a remote Indian or Native village or an individual served by an Indian tribal organization and residing on a reservation or pueblo may establish proof of residency by providing the State agency their mailing address and the name of the remote Indian or Native village.

* * * * *

Dated: November 30, 2000.

George A. Braley,

Acting Administrator, Food and Nutrition Service.

[FR Doc. 00–31452 Filed 12–8–00; 8:45 am]

BILLING CODE 3410–30–U

DEPARTMENT OF THE TREASURY

Office of the Comptroller of the Currency

12 CFR Part 19

[Docket No. 00–33]

RIN 1557–AB88

Rules of Practice and Procedure; Civil Money Penalty Inflation Adjustments

AGENCY: Office of the Comptroller of the Currency, Treasury.

ACTION: Final rule.

SUMMARY: The Office of the Comptroller of the Currency (OCC) is amending its rules of practice and procedure to adjust the maximum amount, as set by statute, of each civil money penalty (CMP) within its jurisdiction to account for inflation. This action is required under the Federal Civil Penalties Inflation Adjustment Act of 1990 (Inflation Adjustment Act), as amended by the Debt Collection Improvement Act of 1996.

DATES: This rule is effective December 11, 2000.

FOR FURTHER INFORMATION CONTACT: Jean Campbell, Attorney, or Mark Tenhundfeld, Assistant Director, Legislative and Regulatory Activities Division, (202) 874–5090, Office of the Comptroller of the Currency, 250 E Street, SW., Washington, DC 20219.

SUPPLEMENTARY INFORMATION:

Background

The Inflation Adjustment Act [1] requires the OCC, as well as other Federal agencies with CMP authority, to publish regulations to adjust each CMP authorized by a law that the agency has jurisdiction to administer. The purpose of these adjustments is to maintain the deterrent effect of CMPs and to promote compliance with the law. The Inflation Adjustment Act requires adjustments to be made at least once every four years following the initial adjustment. The OCC's prior adjustment to each CMP was published in the **Federal Register** on January 22, 1997, [2] and became effective that same day.

The Inflation Adjustment Act requires that the adjustment reflect the percentage increase in the Consumer Price Index between June of the calendar year preceding the adjustment and June of the calendar year in which the amount was last set or adjusted. The Inflation Adjustment Act defines the Consumer Price Index as the Consumer Price Index for all urban consumers published by the Department of Labor (''CPI–U'').[3] In addition, the Inflation Adjustment Act provides rules for rounding off increases,[4] and provides that any increase in a CMP applies only to violations that occur after the date of the adjustment.

Description of the Rule

This final rule adjusts the amount for each type of CMP that the OCC has jurisdiction to impose in accordance with these statutory requirements. It does so by revising the table contained in section 19.240 of our regulations. The table identifies the statutes that provide the OCC with CMP authority, describes the different tiers of penalties provided in each statute (as applicable), and sets out the inflation-adjusted maximum penalty that the OCC may impose pursuant to each statutory provision.

The inflation adjustment for the CMPs was calculated by comparing the CPI–U for June 1996 (156.7) with the CPI–U for June 1999 (166.2),[5] resulting in an inflation adjustment of 6.1 percent.[6] The amount of each CMP was multiplied by the appropriate percentage and the resulting dollar amount was rounded up or down according to the rounding requirements of the statute. In some cases, rounding resulted in no adjustment to the CMP. The table below shows both the present CMPs and inflation adjusted CMPs. The table as published in the rule includes only the CMPs as of the effective date of this rule.

---

[1] 28 U.S.C. 2461 note.

[2] *See* 62 FR 3199, January 22, 1997.

[3] *See* 28 U.S.C. 2461 note.

[4] *See id.* The statute's rounding rules require that an increase be rounded to the nearest multiple of: $10 in the case of penalties less than or equal to $100; $100 in the case of penalties greater than $100 but less than or equal to $1,000; $1,000 in the case of penalties greater than $1,000 but less than or equal to $10,000; $5,000 in the case of penalties greater than $10,000 but less than or equal to $100,000; $10,000 in the case of penalties greater than $100,000 but less than or equal to $200,000; and $25,000 in the case of penalties greater than $200,000.

[5] The Department of Labor (DOL) computes the CPI–U using two different base time periods, 1967 and 1982–1984, and the Inflation Adjustment Act does not specify which of these base periods should be used to calculate the inflation adjustment. The OCC has used the DOL's CPI–U with 1982–84 as the base period because it reflects the most current method of computing the CPI–U.

[6] According to the statute, the inflation adjustment is computed by comparing the CPI–U for June of the year in which the CMPs were ''last set or adjusted'' with CPI–U for June ''of the calendar year preceding [sic] the adjustment.'' 28 U.S.C. 2461 note. Therefore, a different formula is required for three CMPs that did not increase when the OCC made its initial inflation adjustment in 1997. These CMPs—the $2,000 penalties under 12 U.S.C. 164 and 12 U.S.C. 3110(c) and the 4350 [penalty under 42 U.S.C. 4012a(f)(5)—did not increase as a result to application of the rounding rules. For those penalties that were not adjusted in 1997, we have used the year in which the CMP was last set by enactment. *See* footnotes a and b to the table.

U.S. Code citation	Description	Maximum penalty	Amount of increase (6.1 percent)	Amount of increase after rounding	Adjusted maximum penalty
12 U.S.C. 93(b), 504, 1817(j)(16), 1818(i)(2), and 1972(2)(F).	Tier 1	5,500	336		5,500
	Tier 2	27,500	1,678		27,500
	Tier 3	1,100,000	67,100	75,000	1,175,000
12 U.S.C. 164 and 3110(c)	Tier 1	2,000	[a] 678	200	2,200
	Tier 2	22,000	1,342		22,000
	Tier 3	1,100,000	67,100	75,000	1,175,000
12 U.S.C. 1832(c) and 3909(d)(1)		1,100	67		1,100
12 U.S.C. 1884		110	7		110
12 U.S.C. 3110(a)		27,500	1,678		27,500
15 U.S.C. 78u–2(b)	Tier 1 (natural person)	5,500	336		5,500
	Tier 1 (other person)	55,000	3,355	5,000	60,000
	Tier 2 (natural person)	55,000	3,355	5,000	60,000
	Tier 2 (other person)	275,000	16,775	25,000	300,000
	Tier 3 (natural person)	110,000	6,710	10,000	120,000
	Tier 3 (other person)	550,000	33,550	25,000	575,000
42 U.S.C. 4012a(f)(5)	Per violation	350	[b] 43		350
	Per year	105,000	6,405	10,000	115,000

[a] This penalty was enacted as part of the Financial Institutions Reform, Recovery, and Enforcement Act of 1989. Pub. L. 101–73, 103 Stat. 183 (August 9, 1989). The amount did not change when the OCC adjusted the CMPs for inflation in 1997. Therefore, the percentage increase was calculated by comparing the CPI–U for June 1989 (124.1) to the CPI–U for June 1999 (166.2), resulting in an inflation adjustment of 33.9 percent. The corresponding dollar amount is $678, which would be rounded to an increase of $1,000. However, according to the Inflation Adjustment Act, the initial adjustment of a CMP may not exceed 10 percent of such penalty. Thus, the amount of the increase is capped at $200.

[b] This penalty was enacted in the Riegle Community Development and Regulatory Improvement Act of 1994 (RCDRIA). Pub. L. 103–325, 108 Stat. 2160 (September 23, 1994). The amount did not change when the OCC adjusted the CMPs for inflation in 1997. Therefore, the percentage increase was calculated by comparing the CPI–U for June 1994 to the CPI–U for June 1999, resulting in an increase of 12.3 percent.

Section 19.241 states that the adjustments made in section 19.240 apply only to violations that occur after December 11, 2000.

The OCC intends to readjust these amounts in the year 2004 and every four years thereafter, assuming there are no further changes to the mandate imposed by the Inflation Adjustment Act.

Public Notice and Comment and Delayed Effective Date Not Required

Under the Administrative Procedure Act (APA), an agency may dispense with public notice and an opportunity for comment if the agency finds, for good cause, that these procedural requirements are ''impracticable, unnecessary, or contrary to the public interest.'' [7] As described earlier in the Supplementary Information, the Debt Collection Act provides the OCC no discretion in calculating the amount of the civil penalty adjustment. The OCC is, accordingly, unable to vary the amount of the adjustment to reflect any views or suggestions provided by commenters. In that case, notice and comment are unnecessary, and there is, in the opinion of the OCC, good cause to dispense with those procedures.

Both the APA and the RCDRIA require that the effective date of the OCC's regulations generally be delayed.[8] Both statutes contain exceptions if the agency finds good cause to dispense with the delayed effective date. The amendment adopted in this regulation does not substantively affect the rights or obligations of national banks, nor does it impose any new compliance requirements upon them. It merely adjusts the maximum amounts of civil penalties according to a predetermined formula. Moreover, the timing of the adjustment is set by operation of the law that requires the OCC to publish regulations every four years following the initial adjustment.[9] Under these circumstances, the OCC finds good cause to dispense with the APA and RCDRIA delayed effective date provisions. Accordingly, the adjustment to the OCC's civil penalty schedule is effective immediately upon publication in the **Federal Register**.

Regulatory Flexibility Act

The Regulatory Flexibility Act applies only to rules for which an agency publishes a general notice of proposed rulemaking pursuant to 5 U.S.C. 553(b).[10] Because the OCC has determined for good cause that the APA does not require public notice and comment on this final rule, we are not publishing a general notice of proposed rulemaking. Thus, the Regulatory Flexibility Act does not apply to this final rule.

Executive Order 12866

The OCC has determined that this final rule is not a significant regulatory action under Executive Order 12866.

Unfunded Mandates Reform Act of 1995

The OCC has determined that this final rule will not result in expenditures by state, local, and tribal governments, or by the private sector, of $100 million or more in any one year. Accordingly, a budgetary impact statement is not required under section 202 of the Unfunded Mandates Reform Act of 1995.

List of Subjects in 12 CFR Part 19

Administrative practice and procedure, Crime, Equal access to justice, Investigations, National banks, Penalties, Securities.

Authority and Issuance

For the reasons set out in the preamble, part 19 of chapter I of title 12 of the Code of Federal Regulations is amended as follows:

PART 19—RULES OF PRACTICE AND PROCEDURE

1. The authority citation for part 19 is revised to read as follows:

Authority: 5 U.S.C. 504, 554–557; 12 U.S.C. 93a, 93(b), 164, 505, 1817, 1818, 1820, 1831o, 1972, 3102, 3108(a), 3909 and 4717; 15 U.S.C. 78(h) and (i), 78o–4(c), 78o–5, 78q–1, 78u, 78u–2, 78u–3, and 78w; 28 U.S.C.

[7] 5 U.S.C. 553(b)(B).

[8] *See* 5 U.S.C. 553(d)(APA), 12 U.S.C. 4802 (RCDRIA).

[9] The Inflation Adjustment Act required the initial adjustment to be made within 180 days following enactment of the statute, that is, by October 23, 1996.

[10] *See* 5 U.S.C. 601(2).

2461 note; 31 U.S.C. 330 and 5321; and 42 U.S.C. 4012a.

2. Subpart O is revised to read as follows:

Subpart O—Civil Money Penalty Inflation Adjustments

§ 19.240 Inflation adjustments.

The maximum amount of each civil money penalty within the OCC's jurisdiction is adjusted in accordance with the Federal Civil Penalties Inflation Adjustment Act of 1990 (28 U.S.C. 2461 note) as follows:

U.S. Code citation	Description	Adjusted maximum penalty
12 U.S.C. 93(b), 504, 1817(j)(16), 1818(i)(2), and 1972(2)(F)	Tier 1	5,500
	Tier 2	27,500
	Tier 3	1,175,000
12 U.S.C. 164 and 3110(c)	Tier 1	2,200
	Tier 2	22,000
	Tier 3	1,175,000
12 U.S.C. 1832(c) and 3909(d)(1)		1,100
12 U.S.C. 1884		110
12 U.S.C. 3110(a)		27,500
15 U.S.C. 78u–2(b)	Tier 1 (natural person)	5,500
	Tier 1 (other person)	60,000
	Tier 2 (natural person)	60,000
	Tier 2 (other person)	300,000
	Tier 3 (natural person)	120,000
	Tier 3 (other person)	575,000
42 U.S.C. 4012a(f)(5)	Per violation	350
	Per year	115,000

§ 19.241 Applicability.

The adjustments in § 19.240 apply to violations that occur after December 11, 2000.

Dated: December 1, 2000.

John D. Hawke, Jr.,

Comptroller of the Currency.

[FR Doc. 00–31165 Filed 12–8–00; 8:45 am]

BILLING CODE 4810–33–P

DEPARTMENT OF TRANSPORTATION

Federal Aviation Administration

14 CFR Part 25

[Docket No. NM175; Special Conditions No. 25–169–SC]

Special Conditions: Boeing Model 777–200 Series Airplanes; Overhead Crew Rest Compartment

AGENCY: Federal Aviation Administration (FAA), DOT.

ACTION: Final special conditions.

SUMMARY: These special conditions are issued for the Boeing Model 777–200 series airplanes, modified by Flight Structures, Inc. The modification consists of the installation of a crew rest compartment located in the vicinity of door three in the overhead area of the passenger compartment. The crew rest compartment is to be certified for a maximum of ten occupants for use only during flight. The applicable airworthiness regulations do not contain adequate or appropriate safety standards for this design feature. These special conditions contain the additional safety standards that the Administrator considers necessary to establish a level of safety equivalent to that established by the existing airworthiness standards.

EFFECTIVE DATE: December 1, 2000.

FOR FURTHER INFORMATION CONTACT: Jayson Claar, FAA, Transport Standards Staff, ANM–115, Transport Airplane Directorate, 1601 Lind Avenue SW., Renton, Washington, 98055–4056; telephone (425) 227–2194; facsimile (425) 227–1320.

SUPPLEMENTARY INFORMATION:

Background

On June 25, 1999, Flight Structures, Inc., 4407 172 Street NE, Arlington, Washington, 98223, applied for a supplemental type certificate to install an overhead crew rest compartment in Boeing Model 777–200 series airplanes. The Boeing Model 777–200 series airplane is a large twin-jet engine transport airplane with four pairs of Type A exits, a passenger capacity of 440, and a range of 5000 miles. The overhead crew rest compartment is a single compartment located above the main passenger compartment in the vicinity of door three. The crew rest compartment will contain eight private bunks and two seats, and is to be certified for a maximum of ten occupants. A stairwell entering from the door three aisle is the main entry. Two escape hatches are located on either side of the entryway door. These special conditions are written for an overhead crew rest compartment that will be occupied only in flight, not during taxi, takeoff, or landing.

Type Certification Basis

Under the provisions of § 21.101, Flight Structures, Inc., must show that the Boeing Model 777–200 series airplane, as changed, continues to meet the applicable provisions of the regulations incorporated by reference in Type Certificate No. T00001SE or the applicable regulations in effect on the date of application for the change. The regulations incorporated by reference in the type certificate are commonly referred to as the ''original type certification basis.'' The regulations incorporated by reference in Type Certificate No. T00001SE for the Boeing Model 777–200 series airplanes include 14 CFR part 25, as amended by Amendments 25–1 through 25–82. The U.S. type certification basis for the Boeing Model 777–200 series airplanes is established in accordance with 14 CFR 21.29 and 21.17 and the type certification application date. The type certification basis is listed in Type Certificate Data Sheet No. T00001SE.

If the Administrator finds that the applicable airworthiness regulations (*i.e.,* part 25) do not contain adequate or appropriate safety standards for the Model 777–200 series airplanes because of a novel or unusual design feature, special conditions are prescribed under the provisions of § 21.16.

In addition to the applicable airworthiness regulations and special conditions, Boeing Model 777–200

series airplane must comply with the fuel vent and exhaust emission requirements of 14 CFR part 34 and the noise certification requirements of 14 CFR part 36.

Special conditions, as appropriate, are issued in accordance with § 11.49, after public notice, as required by §§ 11.28 and 11.29(b), and become part of the type certification basis in accordance with § 21.101(b)(2).

Special conditions are initially applicable to the model for which they are issued. Should the applicant apply for a supplemental type certificate to modify any other model included on the same type certificate to incorporate the same novel or unusual design feature, the special conditions would also apply to the other model under the provisions of § 21.101(a)(1).

Novel or Unusual Design Features

While the installation of a crew rest compartment is not a new concept for large transport category airplanes, each compartment design has unique features by virtue of its design, location, and use on the airplane. Previously, crew rest compartments have been evaluated that are installed within the main passenger compartment area of the Boeing Model 777–200 and Model 777–300 series airplanes; other crew rest compartments have been installed below the passenger cabin area, within the cargo compartment. Similar overhead crew rest compartments have also been installed on the Boeing Model 747 airplane. The interfaces of the modification are evaluated within the interior and assessed in accordance with the certification basis of the airplane. However, part 25 does not provide the requirements for crew rest compartments within the overhead area of the passenger compartment for the Boeing Model 777–200 series airplanes.

This is a compartment that has never been used for this purpose in any previous Boeing Model 777–200 series airplanes. Due to the novel or unusual features associated with the installation of this crew rest compartment, special conditions are considered necessary to provide a level of safety equal to that established by the airworthiness regulations incorporated by reference in the type certificate.

Discussion of Comments

Notice of proposed special conditions No. 25–00–02-SC for the Boeing Model 777–200 series airplanes modified with a Flight Structures, Inc., overhead crew rest compartment was published in the **Federal Register** on September 25, 2000 (65 FR 57564). Six commenters responded to the Notice.

Special Condition No. 1

Two comments address special condition no. 1(a)(2), concerning a placard near the crew rest compartment entrance stating that occupants must be trained in crew rest compartment evacuation procedures. One commenter proposes that the placarding include the reference to the training material document. The commenter states that this would be consistent with the 747 door 5 overhead crew rest compartment special conditions.

The 747 door 5 overhead crew rest special conditions, issued November 13, 1987, do not include a requirement to have a placard near the entrance of the crew rest compartment stating that occupants must be trained in crew rest compartment evacuation procedures.

The requirement that the occupants must be trained in the evacuation procedures for the Boeing Model 777–200 series airplane crew rest compartment is contained in special condition no. 2(d). After further consideration, the FAA agrees with the recommendation to modify the placarding requirement of special condition no. 1(a)(2) to include ''that are trained in the evacuation procedures for the overhead crew rest compartment,'' but not to include the reference to the training material document.

One comment raises the question that if lighted ''No Smoking'' signs are provided in addition to the ''No Smoking'' placarding in special condition no. 1(a)(4) then the signs and placarding could provide conflicting and confusing information. If the lighted signs are switchable then this would be confusing to the occupants of the crew rest compartment since the lighted signs when not illuminated would allow smoking and the placarding would prohibit smoking. The commenter recommends that if lighted signs are provided that they remain on at all times.

The FAA agrees that if lighted ''No Smoking'' signs are provided that they should remain on at all times.

Special Condition No. 2

One comment addresses special condition no. 2, concerning the requirement that the evacuation from the crew rest compartment must be rapid, which implies an undefined time restraint that is not well understood or required in other special conditions for similar designs of remote compartments. The commenter proposes removing the word ''rapidly'' from the special conditions.

The FAA does not agree with the comment that ''rapidly'' should be removed from the special conditions. The wording in the special conditions is consistent with the evacuation requirements for other remote compartments. The regulation for lower deck service compartments, 14 CFR 25.819, has the same requirement that is addressed in special condition no. 2, including the requirement for rapid evacuation from the compartment to the main deck. The crew rest compartment evacuation must be rapid to reduce the amount of time between the detection of smoke and initiation of fire fighting procedures. Also, rapid evacuation would reduce the amount of time that smoke from the crew rest compartment could enter the passenger cabin through the open evacuation route.

Two comments address special condition no. 2(a), concerning the requirement that the two evacuation routes be located on opposite sides of the crew rest compartment, with sufficient separation within the compartment to minimize the possibility of an event rendering both routes inoperative. They note the words ''opposite sides of the crew rest'' do not add to the level of safety for the occupants of the crew rest over that provided by the evacuation routes that have ''sufficient separation within the compartment to minimize the possibility of an event rendering both routes inoperative.''

Previous special conditions for overhead crew rest compartments have given the option for evacuation routes to be located on opposite sides of the crew rest, or to have sufficient separation within the compartment to minimize the possibility of an event rendering both routes inoperative. The FAA agrees with the comment that the words ''opposite sides of the crew rest'' do not add to the level of safety for the occupants of the crew rest when the routes must have ''sufficient separation within the compartment to minimize the possibility of an event rendering both routes inoperative.'' Evacuation routes located on opposite sides of the crew rest compartment may be located in an area where both routes could be rendered inoperative. The final special conditions will be revised to remove the words ''opposite sides of the crew rest.''

Five comments address special condition no. 2(b), concerning the location of crew rest compartment evacuation paths entering the main deck. One commenter proposes clarification to the times that must be considered for normal movement of passengers that would affect the evacuation from the crew rest compartment by adding the following words ''during times in which

occupancy is allowed'' in the crew rest compartment. The commenter states that since the crew rest compartment is not occupied during taxi, takeoff and landing, egress from the compartment during an emergency evacuation of the airplane is not relevant.

The FAA agrees with the comment that passenger movement during in-flight conditions needs to be considered since the crew rest may only be occupied during flight. The special conditions will be revised to reflect this clarification, that normal movement by passengers when crew rest compartment occupancy is allowed must be considered.

A second commenter states that the limitations for the location of one of the two evacuation routes are too restrictive and proposes some changes. The commenter suggests that during flight the normal passenger movement would be greatest in the main aisle and galley complex areas and the movement in a cross aisle would be much less. The commenter proposes allowing the evacuation routes to open into cross aisles provided there were procedures that would require verification that area below the emergency hatch is clear of passengers before evacuating.

The FAA does not agree with the concern that requiring one evacuation route not to open into a cross aisle is overly restrictive. The special conditions require that one evacuation route be located such that normal passenger movement would not block the route, but allows the other route(s) to be located where they could be blocked by normal passenger movement. A compartment design that would allow both evacuation routes to be blocked by normal passenger movement does not provide an acceptable level of safety.

A third commenter notes that passenger movement is low enough when the crew rest compartment is occupied that the cabin crew could clear the area under or adjacent to an emergency escape route quickly, regardless of its location. The commenter proposes a change to the special conditions requiring procedures for clearing the area of the evacuation route in the event an evacuation is necessary and there is passenger movement in the evacuation route.

The FAA has considered the proposal to have the main deck cabin crew clear passengers out of the evacuation path prior to evacuation from the crew rest compartment. The reliance on the main deck cabin crew to take some action before the crew rest compartment can be evacuated is not acceptable. In cases when the main deck cabin crew is involved with an emergency, they may not be available to clear the passengers out of the area of the evacuation path. This includes evacuation paths into an aisle, cross aisle, galley complex, or over passenger seats.

A fourth commenter states that if the evacuation path is over an area where there are passenger seats, then several items need to be considered including: the number of passengers that would need to be displaced, the relocation of these displaced passengers, passenger displacement during turbulence, the possibility of the evacuees stepping on the passenger seats, and addressing the strength of these passengers seats. The fifth commenter provides some responses to the fourth commenter's concerns.

The FAA agrees that an evacuation path over an area where the passengers must be relocated is a concern. The FAA has considered this type of evacuation path and has determined that a maximum of one row of seats may be displaced.

The FAA agrees that if the evacuation procedure includes having the evacuee step on a seat, then it must be shown the seat will not be damaged to the extent that it is unsafe for the emergency landing conditions.

Special Condition No. 3

Three commenters address special condition no. 3 concerning the evacuation of an incapacitated person from the crew rest compartment. One commenter raises a concern that limiting the procedure to a single person assisting the evacuation of an incapacitated occupant was too restrictive. The commenter suggests that a procedure that requires more than one person assisting should be acceptable.

The FAA does not agree with the comment concerning the assistance of a single person to demonstrate that they can evacuate an incapacitated occupant from the crew rest compartment is too restrictive. In the event there are only two occupants of the crew rest compartment and one becomes incapacitated, the other occupant must be able to evacuate the incapacitated occupant to the main deck of the airplane.

The second commenter questions the need to have the evacuation demonstration conducted for each of the evacuation paths and proposes that the demonstration be limited to the most critical evacuation path.

The FAA does not agree with the comment that only the most critical evacuation path for the incapacitated occupant must be demonstrated, unless the paths are identical to each other including but not limited to size, assist means, access, and available room around the evacuation path. It is very difficult to evaluate which evacuation route would be the most critical path to demonstrate the evacuation of an incapacitated occupant. Therefore, the FAA will require that all routes be demonstrated.

The third commenter proposes that the evacuation procedures should be transmitted to the operator as part of the training evacuation procedure.

The FAA concurs with the comment that the procedures for the evacuation of an incapacitated occupant should be part of the training requirements for the occupants of the crew rest compartment.

Special Condition No. 4

One comment addresses special condition no. 4(a), concerning the requirement for at least one exit sign to be located near each exit. The commenter proposes that only the primary evacuation route be equipped with an exit sign meeting the requirements of § 25.812(b)(1)(i). The commenter believes that having exit signs at both primary and secondary exits may cause confusion during an evacuation.

The FAA disagrees with the comment to have an exit sign only at the primary exit path. The basic reason for the requirement to have an exit sign meeting the requirements of § 25.812(b)(1)(i) located near each exit is to identify the emergency exits. When there is an emergency that requires the evacuation of the crew rest compartment, the occupants must be provided the greatest opportunity to evacuate the compartment as quickly as possible. Identifying all of the evacuation routes with an exit sign provides the evacuees with visible signs that locate the available exits. With this knowledge they can assess the conditions and determine the best route for evacuation based on the conditions present in the compartment.

Three comments address special condition no. 4(d) concerning the illumination of the exit handles and instruction placards. Two of the commenters recommend that the special conditions be revised to clarify what instruction placards are being addressed by the special conditions.

The FAA agrees that special condition no. 4(d) should be revised to identify what instruction placards must be illuminated to at least 160 microlamberts under emergency lighting conditions. The intent is to have the instruction placards for the operation and use of the escape paths be addressed by the illumination

requirements of these special conditions.

The third commenter proposes that special condition no. 4(d) be deleted and special condition no. 4(c) be revised to read as follows: ''Placards and exit handles must be visible and readable from a distance of 30 inches under emergency lighting conditions.''

The FAA disagrees with the proposal to delete special condition no. 4(d) and revise the requirements of special condition no. 4(c) to address the visibility of the instruction placards under emergency lighting conditions. The FAA requires a specific measurable illumination level because it is the best way to eliminate judgement calls that would result from the proposal that requires the placard be readable from a distance of 30 inches under emergency lighting conditions.

Special Condition No. 7

Two comments address special condition no. 7 concerning the use of the public address and crew interphone as the means of alerting the occupants of the crew rest compartment of an emergency. The commenters state that the current public address and crew interphone designs do not differentiate between normal and emergency communications and that each airline has a protocol and procedures for emergency communications.

The FAA is concerned that during normal operation the public address system would not be active in the crew rest compartment. In an emergency, the system would need to be active in the crew rest compartment. Therefore, means need to be provided for differentiating between normal and emergency communications. The FAA also has a similar concern that the chime system on the crew interphone system does not provide an adequate means of differentiating between normal and emergency communications.

Special Condition No. 9

Two comments address special condition no. 9 concerning providing protective clothing for a person fighting a fire in the crew rest compartment. One commenter proposes that protective clothing be provided for the designated fire fighter. The other commenter argues against that type of requirement.

The FAA has determined that the minimum equipment required to fight a fire in the crew rest compartment is a fire extinguisher and protective breathing equipment.

Special Condition No. 10

One comment addresses special condition no. 10(c) concerning the smoke detection warning provided in the main passenger cabin. The commenter suggests that the special condition be changed from ''A warning in the main passenger cabin * * *'' to ''A visual and/or aural warning in the main passenger cabin. * * *'' It is the commenter's contention that both means would provide an acceptable warning.

The FAA agrees that either a visual or aural warning could be found acceptable, however, the current wording does allow both types of warnings or combinations of the warnings. Therefore, no change to the special conditions wording is required.

Special Condition No. 11

Five comments address special condition no. 11 concerning fire control in the overhead crew rest. One commenter disagrees with handling fire control without entering the overhead crew rest area. The commenter states that this does not provide an acceptable level of safety and that manual fire fighting does provide an acceptable level of safety. The commenter states that Halon stratification from a built-in system would settle in the vestibule area of the overhead crew rest and prevent proper concentration in the entire area that would be needed to control the fire.

The FAA disagrees with the comment that a built-in fire extinguishing system does not provide an acceptable level of safety. The FAA would require a test to show that for any built-in fire extinguishing system, the concentration during the initial introduction of Halon 1301 or equivalent is a minimum of five percent by volume and that it is sustained at a minimum level of three percent for the maximum diversion in still air (including an allowance for 15-minute holding and/or approach and land) for the airplane. The applicant's design must ensure that in the event the vestibule door is damaged, the extinguishing agent concentration of Halon 1301 is not compromised. The door would be placarded for crew access only and access will be limited by a mechanism to prevent ''accidental opening.''

One comment mentions a concern about products of thermal decomposition of Halon when exposed to a fire, and the impact of this on passengers.

The FAA agrees that the built-in fire extinguishing system must not introduce a hazard to the occupants or airplane structure. Section 25.851(b) would apply to any built-in fire extinguishing system. The issue of toxicity of fire extinguishing agents has been previously explored as in Amendment 25–74, Airplane Cabin Fire Protection, adopted: April 4, 1991, effective May 16, 1991, as published in the **Federal Register** 56 FR 15450, April 16, 1991.

One comment expresses concern over the operation of the vent system used to evacuate smoke when smoke is present in the overhead crew rest. A system that evacuates smoke during a fire would also evacuate the fire suppression agents used to control the fire in the compartment.

The FAA agrees with the comment that a ventilation system within a compartment that has a fire suppression system can have a negative affect on the fire suppression system. The design of the ventilation system would need to ensure that the ventilation flow can be controlled in such a way during a fire that the fire suppression agent used remains in the compartment. There is no requirement to clear smoke from the crew rest area, however, there is a requirement to clear the smoke that has entered the main passenger compartment during the evacuation of the crew rest compartment and/or during the process of fighting the fire.

One commenter addresses concerns regarding the access provisions required for the crew rest compartment and timely access of the crew member with the fire fighting equipment and proposes changes to the special condition. The commenter believes that ''unrestricted access'' is too restrictive a requirement and the ''sufficient access'' provides an acceptable level of safety.

The FAA disagrees with the comment that the current language is inappropriate. The use of ''unrestricted access'' related to ''crewmembers equipped for fire fighting''. The intent of this requirement is to ensure that the aircraft design will accommodate the entrance to enable ''crewmembers equipped for fire fighting'' to gain entrance to the crew rest area in a minimum amount of time.

One comment suggests that a built-in fire extinguishing system is not warranted.

The FAA does not concur with the comment. The special condition as written allows either a built-in system or crew entry and extinguishing of fire directly. This is left to the applicant to propose and demonstrate a suitable solution. The overhead crew rest area poses some challenges but a successful applicant should be able to design the crew rest area and associated ventilation system and smoke/detection and fire suppression system architecture to ensure that FAA requirements are met. Therefore, the FAA believes that the

current language in the special condition is appropriate.

One commenter suggests the special condition should be revised to reflect the type of fire most likely to occur within the crew rest compartment and associated detection times.

The FAA disagrees that the special conditions should be revised to reflect the type of fires most likely to occur within the crew rest compartment. The special conditions must reflect all expected fire threat scenarios. It should be noted that the crew rest area will not be carrying flammable fluids, explosives, or other dangerous cargo. The requirements to enable crewmember(s) quick entry to the crew rest compartment and to locate a fire source inherently places limits on the amount of baggage that may be carried and the size of the crew rest area. The applicant must accommodate these requirements and the appropriate Aircraft Certification Office must require suitable means of compliance and may elect to limit an investigation to a ''worse case fire threat'' scenario.

One commenter suggests having a trained crewmember for manual fire fighting as the most effective means for controlling a fire in an overhead crew rest compartment. The commenter recommends that only the manual fire fighting be accepted for the crew rest compartment.

The special condition allows the applicant to select an appropriate means to meet the requirement. While the presence of a ''trained crewmember'' may be very effective, the FAA position is that a properly designed smoke detection and fire suppression system with sufficient quantity of smoke detectors, smoke detector placement, quantity and placement of fire extinguishing nozzles, control of ventilation, etc; can provide an effective means to control and suppress a fire threat in any crew rest area.

One commenter suggests that the critical design issue for effective manual fire fighting is unrestricted access to the compartment.

The FAA concurs that the time element is a critical issue for effective control and suppression of any fire threat for both a built-in smoke detection and fire suppression system and a manual fire fighting system.

One comment states that ''the time for the compartment to become smoke-filled, * * *'' is vague and open to numerous interpretations.

The FAA disagrees. Performance based wording is deliberately used to convey to the applicant a broad spectrum of requirements that the regulation intends. The FAA does agree that there needs to be a common understanding of the requirements and that they need to be consistently applied to each applicant that has a similar installation.

One comment states that it is not clear if a flight test is required for the crew intervention option in special condition no. 11. The commenter believes that it is possible this may be the more limiting test condition and should therefore be required.

The FAA concurs, and an aircraft certification office may require flight testing to demonstrate an acceptable means of compliance.

One comment states that there is no evaluation of the effectiveness of fire fighting procedures. The commenter questions whether it is sufficient to determine that the option of crew intervention provides an equivalent level of safety to the installation of a fire suppression system.

The FAA concurs that the special conditions as written focus on the requirement that a crewmember be able to quickly enter the crew rest compartment prepared to locate the smoke source. Inherent in the action of locating the smoke source is the action of suppression/extinguishment of the smoke source that should be no different than utilizing a fire extinguisher in the cabin. The key issue is the response time. As previously mentioned, the time required to gain access and determine the smoke source must be short enough to prevent the fire from propagating and threatening continued safe flight and landing. The applicant must evaluate the kinds of fires likely to occur and ensure that the appropriate fire extinguishers are provided per the requirements given in § 25.851. In addition, FAA has begun internal discussions to develop guidance on acceptable means of compliance. These discussions have included issues such as the required level of smoke concentration, the possible use of a low light level source to simulate a visual cue from a ''smoldering source,'' placement of the smoke source, and test conditions. The FAA will issue applicable guidance material when it becomes available or is required.

Special Condition No. 14

Five comments address special condition no. 14(a) concerning the manual release of the oxygen system in the crew rest compartment. Several of the comments state that the design in previous remote crew rest compartments has been an extension of the system provided in the passenger compartment. The oxygen system has an automatic and a manual release method. With the automatic release method, whenever the altitude in the cabin goes higher than a preset amount, the oxygen masks are automatically deployed. With the manual method, the flight crew can deploy the oxygen masks. The commenters question the need to have a method for the crew rest occupants to manually deploy the oxygen masks.

The FAA agrees with the commenters that the system should be similar to the main deck passenger oxygen system and there must be a means for the oxygen masks to be manually deployed from the flight deck.

One comment addresses special condition no. 14(c)(5) and (f)(7). The commenter interprets a section as a common area in the crew rest area that contains seats and/or bunks that can be closed off for privacy * * * and a smoke detection system in that section that ties into the entire crew rest smoke detection system. The commenter suggests changing the wording in the special conditions to read ''Testing of the smoke detection system will demonstrate that a fire can be detected in each individual bunk.''

The FAA agrees with the interpretation but disagrees with the need to adopt the suggested language. The FAA interpretation of the requirements for built-in smoke detection and fire suppression/extinguishing systems inherently includes the need for detection and for suppression/extinguishment to encompass the entire area in question.

One comment recommends a general change to the special conditions concerning the approval of all normal, abnormal and emergency procedures and their training be approved by the Authority under which the airplane is operated. The commenter proposes that a statement to that effect be included in the special conditions.

The FAA agrees with the comment that the Authority under which the airplane is operated approves all normal, abnormal and emergency procedures and their training. However, the FAA disagrees that the special conditions must include that requirement. The modification to install the overhead crew rest area would be considered a major modification that would require the approval of the Authority under which the airplane is operated to return the airplane to service after the modification. This approval to return the airplane to service would include review and approval of all normal, abnormal and emergency procedures and their training changes made as a result of the modification.

Discussion of the Special Conditions

In general, the requirements listed in these special conditions are similar to those previously approved in earlier certification programs, such as the Boeing Model 747 overhead crew rest compartment. These special conditions establish seating, communication, lighting, personal safety, and evacuation requirements for the overhead crew rest compartment. When applicable, the requirements parallel the existing requirements for a lower deck service compartment and provide an equivalent level of safety to that provided for main deck occupants.

Seats and berths must be certified to the maximum flight loads. Due to the location and configuration of the crew rest compartment, occupancy during taxi, takeoff, and landing would be prohibited, and occupancy limited to crewmembers during flight. Occupancy would be limited to either ten persons, or the combined total of approved seats and berths, whichever is less.

To preclude occupants from being trapped in the crew rest compartment in the event the main entryway is blocked, two evacuation routes, including the entryway, would be required. Each evacuation route must be designed to allow for removal of an incapacitated person from the crew rest compartment to the main deck.

In addition, passenger information signs, supplemental oxygen, and a seat or berth for each occupant of the crew rest compartment would be required. These items are necessary because of turbulence and/or decompression.

To prevent the occupants from being isolated in a dark area due to loss of the crew rest compartment lighting, either a second independent source of normal lighting or emergency lighting would be required. An emergency lighting system, which is activated under the same conditions as the main deck emergency lighting system, would also be required.

Two-way voice communications and public address speaker(s) would be required to alert the occupants to an inflight emergency. Also, a system to alert the occupants of the crew rest compartment in the event of decompression and to don oxygen masks would be required.

Special condition No. 8 requires a means, readily detectable by seated or standing occupants of the crew rest compartment, which indicates when seat belts should be fastened. The requirement for visibility of the sign by standing occupants may be met by a general area sign that is visible to occupants standing in the main floor area or corridor of the crew rest area. It will not be essential to be visible from every possible location in the crew rest area; however, the location should not be easily obscured or remotely located.

Since the overhead crew rest compartment is remotely located from the main passenger cabin and will not always be occupied, a smoke detection system and fire-fighting equipment will be required to minimize the hazards associated with a fire in the crew rest compartment. The smoke detection system must be capable of detecting a fire in each area of the compartment created by the installation of a curtain or partition. The materials in the crew rest compartment must meet the flammability requirements of § 25.853(a), and the mattresses must meet the fire blocking requirements of § 25.853(c).

The crew rest compartment must be designed such that fires within the compartment can be controlled without having to enter the compartment; or, the design of the access provisions must allow crew equipped for fire fighting to have unrestricted access to the compartment. The time for a crewmember on the main deck to react to the fire alarm, to don the fire fighting equipment, and to gain access must not exceed the time for the crew rest compartment to become smoke filled, making it difficult to locate the fire source. If the means of controlling the fire within the compartment is a Halon 1301 or equivalent fire suppression system, the system should be designed similar to a cargo compartment fire suppression system. Advisory Circular 120–42, titled ''Extended Range Operation With Two-Engine Airplanes (ETOPS)'' provides guidance on fire suppression systems in cargo compartments.

This special condition requirement concerning fires within the compartment was developed for, and applied to, Boeing Model 777–200 and Model 777–300 series airplanes lower lobe crew rest compartment; it was not applied to the overhead crew rest compartment in earlier certification programs such as the Boeing Model 747. The Model 747 special conditions were issued before the new flammability requirements were developed. This requirement originated from a concern that a fire in an unoccupied crew rest compartment could spread into the passenger compartment, or affect other vital systems, before it could be extinguished. The special condition would require either the installation of a manually activated fire containment system that is accessible from outside the crew rest compartment, or a demonstration that the crew could satisfactorily perform the function of extinguishing a fire under the prescribed conditions. The manually activated fire containment system would be required only if it could not be demonstrated that a crewmember responding to the alarm could not locate the fire source and successfully extinguish the fire.

These special conditions provide the regulatory requirements necessary for certification of this modification. Other special conditions may be developed, as needed, based on further FAA review and discussions with the applicant, manufacturer, and civil aviation authorities.

Applicability

As discussed above, these special conditions are applicable to Boeing Model 777–200 series airplanes. Should Flight Structures, Inc., apply at a later date for a supplemental type certificate to modify any other model included on Type Certificate No. T00001SE to incorporate the same novel or unusual design feature, the special conditions would apply to that model as well under the provisions of § 21.101(a)(1).

Conclusion

This action affects only certain novel or unusual design features on Boeing Model 777–200 series airplanes. It is not a rule of general applicability, and it affects only the applicant who applied to the FAA for approval of these features on the airplane.

List of Subjects in 14 CFR Part 25

Aircraft, Aviation safety, Reporting and recordkeeping requirements.

The authority citation for these special conditions is as follows:

Authority: 49 U.S.C. 106(g), 40113, 44701, 44702, 44704.

The Special Conditions

Accordingly, pursuant to the authority delegated to me by Administrator, the following special conditions are issued as part of the type certification basis for Boeing Model 777–200 series airplanes, as modified by Flight Structures, Inc., with overhead crew rest compartments.

1. Occupancy of the overhead crew rest compartment is limited to a maximum of ten occupants. There must be an approved seat or berth able to withstand the maximum flight loads when occupied for each occupant permitted in the crew rest compartment.

(a) There must be appropriate placards, inside and outside to indicate:

(1) The maximum number of occupants allowed,

(2) That occupancy is restricted to crewmembers that are trained in the evacuation procedures for the overhead crew rest compartment,

(3) That occupancy is prohibited during taxi, take-off and landing, and

(4) That smoking is prohibited in the crew rest compartment.

(b) There must be at least one ashtray on the inside and outside of any entrance to the crew rest compartment.

(c) There must be a means to prevent passengers from entering the compartment in the event of an emergency or when no flight attendant is present.

(d) There must be a means for any door installed between the crew rest compartment and passenger cabin to be capable of being quickly opened from inside the compartment, even when crowding occurs at each side of the door.

(e) For all doors installed, there must be a means to preclude anyone from being trapped inside the compartment. If a locking mechanism is installed, it must be capable of being unlocked from the outside without the aid of special tools. The lock must not prevent opening from the inside of the compartment at any time.

2. There must be at least two emergency evacuation routes that could be used by each occupant of the crew rest compartment to rapidly evacuate to the main cabin. In addition—

(a) The routes must be located with sufficient separation within the compartment, and between the evacuation routes, to minimize the possibility of an event rendering both routes inoperative.

(b) The routes must be designed to minimize the possibility of blockage, which might result from fire, mechanical or structural failure, or persons standing below or against the escape route. One of two evacuation routes may not be located where, during times in which occupancy is allowed, normal movement by passengers occurs (*i.e.*, main aisle, cross aisle, or galley complex) that would impede egress of the crew rest compartment. If there is low headroom at or near the evacuation route, provisions must be made to prevent or to protect occupants from head injury. The use of evacuation routes must not be dependent on any powered device. If the evacuation procedure involves the evacuee stepping on seats, the seats must not be damaged to the extent that they would not be acceptable for occupancy during an emergency landing.

(c) Emergency evacuation procedures and the evacuation of incapacitated occupants must be established and transmitted to the operators for incorporation into their training programs and appropriate operational manuals.

(d) There must be a limitation in the Airplane Flight Manual or other suitable means requiring that crewmembers be trained in the use of evacuation routes.

3. There must be a means for the evacuation of an incapacitated person (representative of a ninety-fifth percentile male) from the crew rest compartment to the passenger cabin floor. The evacuation must be demonstrated for all evacuation routes. A flight attendant or other crewmember (a total of one assistant) may provide assistance in the evacuation. Procedures for the evacuation of an incapacitated person from the crew rest compartment must be established.

4. The following signs and placards must be provided in the crew rest compartment:

(a) At least one exit sign, located near each exit, meeting the requirements of § 25.812(b)(1)(i).

(b) An appropriate placard defining the location and the operating instructions for each evacuation route.

(c) Placards must be readable from a distance of 30 inches under emergency lighting conditions.

(d) The exit handles and evacuation path operating instruction placards must be illuminated to at least 160 microlamberts under emergency lighting conditions.

5. There must be a means in the event of failure of the airplane's main power system, or of the normal crew rest compartment lighting system, for emergency illumination to be automatically provided for the crew rest compartment.

(a) This emergency illumination must be independent of the main lighting system.

(b) The sources of general cabin illumination may be common to both the emergency and the main lighting systems if the power supply to the emergency lighting system is independent of the power supply to the main lighting system.

(c) The illumination level must be sufficient for the occupants of the crew rest compartment to locate and transfer to the main passenger cabin floor by means of each evacuation route.

6. There must be means for two-way voice communications between the crewmembers on the flight deck and the occupants of the crew rest compartment. There must also be two-way communications between the occupants of the crew rest compartment and each flight attendant station required to have a public address system microphone per § 25.1423(g) in the passenger cabin.

7. There must be a means for manual activation of an aural emergency alarm system, audible during normal and emergency conditions, to enable crewmembers on the flight deck and at each pair of required floor level emergency exits to alert occupants of the crew rest compartment of an emergency situation. Use of a public address or crew interphone system will be acceptable, providing an adequate means of differentiating between normal and emergency communications is incorporated. The system must be powered in flight, after the shutdown or failure of all engines and auxiliary power units, or the disconnection or failure of all power sources dependent on their continued operation, for a period of at least ten minutes.

8. There must be a means, readily detectable by seated or standing occupants of the crew rest compartment, which indicates when seat belts should be fastened. Seat belt type restraints must be provided for berths and must be compatible for the sleeping attitude during cruise conditions. There must be a placard on each berth requiring that seat belts must be fastened when occupied. If compliance with any of the other requirements of these special conditions is predicated on specific head location, there must be a placard identifying the head position. In the event there are no seats, at least one sign must be provided to cover anticipated turbulence.

9. The following equipment must be provided in the crew rest compartment:

(a) At least one approved hand-held fire extinguisher appropriate for the kinds of fires likely to occur;

(b) One protective breathing equipment device approved to Technical Standard Order (TSO)–C116 or equivalent, suitable for fire fighting; and

(c) One flashlight.

10. A smoke detection system (or systems) must be provided that monitors each area within the crew rest compartment, including those areas partitioned by curtains. Flight tests must be conducted to show compliance with this requirement. Each system (or systems) must provide:

(a) A visual indication to the flight deck within one minute after the start of a fire;

(b) An aural warning in the crew rest compartment; and

(c) A warning in the main passenger cabin. This warning must be readily detectable by a flight attendant, taking

into consideration the positioning of flight attendants throughout the main passenger compartment during various phases of flight.

11. The crew rest compartment must be designed such that fires within the compartment can be controlled without a crewmember having to enter the compartment, or the design of the access provisions must allow crewmembers equipped for firefighting to have unrestricted access to the compartment. The time for a crewmember on the main deck to react to the fire alarm, to don the fire fighting equipment, and to gain access must not exceed the time for the compartment to become smoke-filled, making it difficult to locate the fire source.

12. There must be a means provided to exclude hazardous quantities of smoke or extinguishing agent originating in the crew rest compartment from entering any other compartment occupied by crewmembers or passengers. The means must include the time periods during the evacuation of the crew rest compartment and, if applicable, when accessing the crew rest compartment to manually fight a fire. Smoke entering any other compartment occupied by crewmembers or passengers must dissipate within 5 minutes after closing the access to the crew rest compartment. Flight tests must be conducted to show compliance with this requirement.

13. There must be a supplemental oxygen system equivalent to that provided for main deck passengers for each seat and berth in the crew rest compartment. The system must provide:

(a) An aural and visual warning to the occupants of the crew rest compartment to don oxygen masks in the event of decompression; and

(b) A decompression warning that activates before the cabin pressure altitude exceeds 15,000 feet. The warning must sound continuously until a reset pushbutton in the crew rest compartment is depressed.

14. The following requirements apply to a crew rest compartment that is divided into several sections by the installation of curtains or partitions:

(a) To compensate for sleeping occupants, there must be an aural alert that can be heard in each section of the crew rest compartment that accompanies automatic presentation of supplemental oxygen masks. Two supplemental oxygen masks are required in each section whether or not seats or berths are installed in each section. There must also be a means by which the oxygen masks can be manually deployed from the flight deck.

(b) A placard is required adjacent to each curtain that visually divides or separates, for privacy purposes, the overhead crew rest compartment into small sections. The placard must require that the curtain(s) remain open when the private section it creates is unoccupied. The vestibule section adjacent to the stairway is not considered a private area and, therefore, does not require a placard.

(c) For each crew rest section created by the installation of a curtain, the following requirements of these special conditions must be met with the curtain open or closed:

(1) No smoking placard (special condition no. 1),

(2) Emergency illumination (special condition no. 5),

(3) Emergency alarm system (special condition no. 7),

(4) Seat belt fasten signal (special condition no. 8), and

(5) The smoke or fire detection system (special conditions no.'s 10, 11, and 12).

(d) Overhead crew rest compartments visually divided to the extent that evacuation could be affected must have exit signs that direct occupants to the primary stairway exit. The exit signs must be provided in each separate section of the crew rest compartment, and must meet the requirements of § 25.812(b)(1)(i).

(e) For sections within an overhead crew rest compartment that are created by the installation of a rigid partition with a door physically separating the sections, the following requirements of these special conditions must be met with the door open or closed:

(1) There must be a secondary evacuation route from each section to the main deck, or alternatively, it must be shown that any door between the sections has been designed to preclude anyone from being trapped inside the compartment.

(2) Any door between the sections must be shown to be openable when crowded against, even when crowding occurs at each side of the door.

(3) There may be no more than one door between any seat or berth and the primary stairway exit.

(4) There must be exit signs in each section meeting the requirements of § 25.812(b)(1)(i) that direct occupants to the primary stairway exit.

(f) For each smaller section within the main crew rest compartment created by the installation of a partition with a door, the following requirements of these special conditions must be met with the door open or closed:

(1) No smoking placards (special condition no. 1),

(2) Emergency illumination (special condition no. 5),

(3) Two-way voice communication (special condition no. 6),

(4) Emergency alarm system (special condition no. 7),

(5) Seat belt fasten signal (special condition no. 8),

(6) Emergency fire fighting and protective equipment (special condition no. 9), and

(7) Smoke or fire detection system (special conditions no.'s 10, 11, and 12).

15. The requirements of two-way voice communication with the flight deck and provisions for emergency firefighting and protective equipment are not applicable to lavatories or other small areas that are not intended to be occupied for extended periods of time.

16. Where a waste disposal receptacle is fitted, it must be equipped with an automatic fire extinguisher that meets the performance requirements of § 25.854(b).

17. Materials (including finishes or decorative surfaces applied to the materials) must comply with the flammability requirements of § 25.853(a), as amended by Amendment 25–83. Mattresses must comply with the flammability requirements of § 25.853(c), as amended by Amendment 25–83.

Issued in Renton, Washington on December 1, 2000.

Donald L. Riggin,

Acting Manager, Transport Airplane Directorate, Aircraft Certification Service, ANM–100.

[FR Doc. 00–31478 Filed 12–8–00; 8:45 am]

BILLING CODE 4910–13–U

DEPARTMENT OF TRANSPORTATION

Federal Aviation Administration

14 CFR Part 39

[Docket No. 2000–NM–03–AD; Amendment 39–12032; AD 2000–24–25]

RIN 2120–AA64

Airworthiness Directives; Raytheon Model Hawker 800A (U–125A) and Hawker 800XP Series Airplanes

AGENCY: Federal Aviation Administration, DOT.

ACTION: Final rule.

SUMMARY: This amendment adopts a new airworthiness directive (AD), applicable to certain Raytheon Model Hawker 800A (U–125A) and Hawker 800XP series airplanes, that requires inspecting the roller clearance in the nose landing gear drag stay and making

any necessary adjustments. This amendment is prompted by reports indicating multiple findings of roller clearances that are in excess of specifications. The actions specified by this AD are intended to prevent the inability to extend the nose landing gear, which could result in damage to the airplane upon landing.

DATES: Effective January 16, 2001.

The incorporation by reference of certain publications listed in the regulations is approved by the Director of the Federal Register as of January 16, 2001.

ADDRESSES: The service information referenced in this AD may be obtained from Raytheon Aircraft Company, 9709 East Central, Wichita, Kansas 67206. This information may be examined at the Federal Aviation Administration (FAA), Transport Airplane Directorate, Rules Docket, 1601 Lind Avenue, SW., Renton, Washington; or at the FAA, Wichita Aircraft Certification Office, 1801 Airport Road, Room 100, Mid-Continent Airport, Wichita, Kansas; or at the Office of the Federal Register, 800 North Capitol Street, NW., suite 700, Washington, DC.

FOR FURTHER INFORMATION CONTACT: Paul C. DeVore, Aerospace Engineer, Systems and Propulsion Branch, ACE–116W, FAA, Wichita Aircraft Certification Office, 1801 Airport Road, Room 100, Mid-Continent Airport, Wichita, Kansas 67209; telephone (316) 946–4142; fax (316) 946–4407.

SUPPLEMENTARY INFORMATION: A proposal to amend part 39 of the Federal Aviation Regulations (14 CFR part 39) to include an airworthiness directive (AD) that is applicable to certain Raytheon Model Hawker 800A (U–125A) and Hawker 800XP series airplanes was published in the **Federal Register** on August 8, 2000 (65 FR 48402). That action proposed to require inspecting the roller clearance in the nose landing gear drag stay and making any necessary adjustments.

Comments

Interested persons have been afforded an opportunity to participate in the making of this amendment. No comments were submitted in response to the proposal or the FAA's determination of the cost to the public.

Conclusion

The FAA has determined that air safety and the public interest require the adoption of the rule as proposed.

Cost Impact

There are approximately 85 airplanes of the affected design in the worldwide fleet. The FAA estimates that 50 airplanes of U.S. registry will be affected by this AD, that it will take approximately 7 work hours per airplane to accomplish the required inspection and any necessary adjustments, and that the average labor rate is $60 per work hour. Based on these figures, the cost impact of the AD on U.S. operators is estimated to be $21,000, or $420 per airplane.

The cost impact figure discussed above is based on assumptions that no operator has yet accomplished any of the requirements of this AD action, and that no operator would accomplish those actions in the future if this AD were not adopted. The cost impact figures discussed in AD rulemaking actions represent only the time necessary to perform the specific actions actually required by the AD. These figures typically do not include incidental costs, such as the time required to gain access and close up, planning time, or time necessitated by other administrative actions.

Regulatory Impact

The regulations adopted herein will not have a substantial direct effect on the States, on the relationship between the national Government and the States, or on the distribution of power and responsibilities among the various levels of government. Therefore, it is determined that this final rule does not have federalism implications under Executive Order 13132.

For the reasons discussed above, I certify that this action (1) is not a ''significant regulatory action'' under Executive Order 12866; (2) is not a ''significant rule'' under DOT Regulatory Policies and Procedures (44 FR 11034, February 26, 1979); and (3) will not have a significant economic impact, positive or negative, on a substantial number of small entities under the criteria of the Regulatory Flexibility Act. A final evaluation has been prepared for this action and it is contained in the Rules Docket. A copy of it may be obtained from the Rules Docket at the location provided under the caption **ADDRESSES**.

List of Subjects in 14 CFR Part 39

Air transportation, Aircraft, Aviation safety, Incorporation by reference, Safety.

Adoption of the Amendment

Accordingly, pursuant to the authority delegated to me by the Administrator, the Federal Aviation Administration amends part 39 of the Federal Aviation Regulations (14 CFR part 39) as follows:

PART 39—AIRWORTHINESS DIRECTIVES

1. The authority citation for part 39 continues to read as follows:

Authority: 49 U.S.C. 106(g), 40113, 44701.

39.13 [Amended]

2. Section 39.13 is amended by adding the following new airworthiness directive:

2000–24–25 Raytheon Aircraft Company: Amendment 39–12032. Docket 2000–NM–03–AD.

Applicability: Model Hawker 800XP and Hawker 800A (U–125A) series airplanes, as specified in Raytheon Aircraft Service Bulletin SB 32–3274, dated August 1999; certificated in any category.

Note 1: This AD applies to each airplane identified in the preceding applicability provision, regardless of whether it has been modified, altered, or repaired in the area subject to the requirements of this AD. For airplanes that have been modified, altered, or repaired so that the performance of the requirements of this AD is affected, the owner/operator must request approval for an alternative method of compliance in accordance with paragraph (c) of this AD. The request should include an assessment of the effect of the modification, alteration, or repair on the unsafe condition addressed by this AD; and, if the unsafe condition has not been eliminated, the request should include specific proposed actions to address it.

Compliance: Required as indicated, unless accomplished previously.

To prevent the inability to extend the nose landing gear due to excessive clearance of the roller in the drag stay rigging, which could result in damage to the airplane upon landing, accomplish the following:

Inspection and Adjustment

(a) Within 50 hours time-in-service after the effective date of this AD: Remove the paint from the drag stay arm of the nose landing gear at its point of contact with the stop bolt, do a check of the roller clearances, and make any necessary adjustments, in accordance with the Accomplishment Instructions of Raytheon Aircraft Service Bulletin SB 32–3274, dated August 1999.

(b) Airplanes which have had the 600-hour inspection specified in the Aircraft Maintenance Manual before the effective date of this AD or which will have the 600-hour inspection within 50 hours time-in-service after the effective date of this AD are considered to be in compliance with paragraph (a) of this AD.

Alternative Methods of Compliance

(c) An alternative method of compliance or adjustment of the compliance time that provides an acceptable level of safety may be used if approved by the Manager, Wichita Aircraft Certification Office (ACO), FAA. Operators shall submit their requests through an appropriate FAA Principal Maintenance Inspector, who may add comments and then send it to the Manager, Wichita ACO.

Note 2: Information concerning the existence of approved alternative methods of

compliance with this AD, if any, may be obtained from the Wichita ACO.

Special Flight Permits

(d) Special flight permits may be issued in accordance with sections 21.197 and 21.199 of the Federal Aviation Regulations (14 CFR 21.197 and 21.199) to operate the airplane to a location where the requirements of this AD can be accomplished.

Incorporation by Reference

(e) The actions shall be done in accordance with Raytheon Aircraft Service Bulletin SB 32–3274, dated August 1999. This incorporation by reference was approved by the Director of the Federal Register in accordance with 5 U.S.C. 552(a) and 1 CFR part 51. Copies may be obtained from Raytheon Aircraft Company, 9709 East Central, Wichita, Kansas 67206. Copies may be inspected at the FAA, Transport Airplane Directorate, 1601 Lind Avenue, SW., Renton, Washington; or at the FAA, Wichita Aircraft Certification Office, 1801 Airport Road, Room 100, Mid-Continent Airport, Wichita, Kansas; or at the Office of the Federal Register, 800 North Capitol Street, NW., suite 700, Washington, DC.

Effective Date

(f) This amendment becomes effective on January 16, 2001.

Issued in Renton, Washington, on November 29, 2000.

Donald L. Riggin,

Acting Manager, Transport Airplane Directorate, Aircraft Certification Service.

[FR Doc. 00–30946 Filed 12–8–00; 8:45 am]

BILLING CODE 4910–13–U

DEPARTMENT OF TRANSPORTATION

Federal Aviation Administration

14 CFR Part 39

[Docket No. 2000–CE–49–AD; Amendment 39–12030; AD 2000–24–23]

RIN 2120–AA64

Airworthiness Directives; S.N. CENTRAIR 101 Series Gliders

AGENCY: Federal Aviation Administration, DOT.

ACTION: Final rule.

SUMMARY: This amendment adopts a new airworthiness directive (AD) that applies to certain S.N. CENTRAIR 101 series gliders. This AD requires you to inspect the airbrake control system for cracks; and if cracks are detected, replace the airbrake control system. This AD is the result of mandatory continuing airworthiness information (MCAI) issued by the airworthiness authority for France. The actions specified in this AD are intended to detect cracks in the airbrake control system and replace cracked parts with parts of improved design. A crack in the airbrake control system could prevent the pilot from using the airbrake system.

DATES: This AD becomes effective on January 27, 2001.

The Director of the Federal Register approved the incorporation by reference of certain publications listed in the regulations as of January 27, 2001.

ADDRESSES: You may get the service information referenced in this AD from S.N. CENTRAIR, Aerodome—36300 Le Blanc, France; telephone: 02.54.37.07.96; facsimile: 02.54.37.48.64. You may examine this information at the Federal Aviation Administration (FAA), Central Region, Office of the Regional Counsel, Attention: Rules Docket No. 2000–CE–49–AD, 901 Locust, Room 506, Kansas City, Missouri 64106; or at the Office of the Federal Register, 800 North Capitol Street, NW, suite 700, Washington, DC.

FOR FURTHER INFORMATION CONTACT: Mike Kiesov, Aerospace Engineer, FAA, Small Airplane Directorate, 901 Locust, Room 301, Kansas City, Missouri 64106; telephone: (816) 329–4144; facsimile: (816) 329–4090.

SUPPLEMENTARY INFORMATION:

Discussion

What Events Have Caused This AD?

The Direction Générale de l'Aviation Civile (DGAC), which is the airworthiness authority for France, recently told the FAA that an unsafe condition may exist on certain S.N. CENTRAIR 101 series gliders. The DGAC reports that a failure analysis of the welded parts of airbrake arms revealed that cracks could occur in these parts.

What Happens If You Do Not Correct the Condition?

This condition, if not corrected, could result in undetected cracks. Consequently, a crack in the airbrake control system could prevent the pilot from using the airbrake system.

Has FAA Taken Any Action to This Point?

We issued a proposal to amend part 39 of the Federal Aviation Regulations (14 CFR part 39) to include an AD that would apply to certain S.N. CENTRAIR 101 series gliders. This proposal was published in the **Federal Register** as a notice of proposed rulemaking (NPRM) on September 14, 2000 (65 FR 55466). The NPRM proposed to require you to inspect the airbrake control system for cracks and if cracks are detected, replace the airbrake control system.

Was the Public Invited To Comment?

Interested persons were afforded an opportunity to participate in the making of this amendment. No comments were received on the proposed rule or the FAA's determination of the cost to the public.

The FAA's Determination

What Is FAA's Final Determination on This Issue?

After careful review of all available information related to the subject presented above, we have determined that air safety and the public interest require the adoption of the rule as proposed except for minor editorial corrections. We determined that these minor corrections:

—Will not change the meaning of the AD; and

—Will not add any additional burden upon the public than was already proposed.

Cost Impact

How Many Gliders Does This AD Impact?

We estimate that this AD affects 41 gliders in the U.S. registry.

What Is the Cost Impact of This AD on Owners/Operators of the Affected Gliders?

We estimate the following costs to accomplish the inspection:

Labor cost	Parts cost	Total cost per glider	Total cost on U.S. operators
2 workhours × $60 per hour = $120.	No parts required for the inspection.	$120 per glider	$120 × 41 = $4,920.

We estimate the following costs to accomplish the replacement of the airbrake control system if necessary:

Labor cost	Parts cost	Total cost per glider
2 workhours × $60 per hour = $240	$100 per glider	$340 per glider.

Compliance Time of This AD

Why Is the Compliance Time in Calendar Time?

The compliance time of this AD is in calendar time instead of hours time-in-service (TIS). The average monthly use of the affected gliders ranges throughout the fleet. For example, one owner may operate the glider 25 hours TIS in one week, while another operator may operate the glider 25 hours TIS in one year. In order to ensure that all of the owners/operators of the affected glider have inspected the airbrake control system within a reasonable amount of time, the FAA is utilizing a compliance time of 60 calendar days after the effective date of this AD.

Regulatory Impact

Does This AD Impact Various Entities?

The regulations adopted herein will not have a substantial direct effect on the States, on the relationship between the national government and the States, or on the distribution of power and responsibilities among the various levels of government. Therefore, it is determined that this final rule does not have federalism implications under Executive Order 13132.

Does This AD Involve a Significant Rule or Regulatory Action?

For the reasons discussed above, I certify that this action (1) is not a ''significant regulatory action'' under Executive Order 12866; (2) is not a ''significant rule'' under DOT Regulatory Policies and Procedures (44 FR 11034, February 26, 1979); and (3) will not have a significant economic impact, positive or negative, on a substantial number of small entities under the criteria of the Regulatory Flexibility Act. A copy of the final evaluation prepared for this action is contained in the Rules Docket. A copy of it may be obtained by contacting the Rules Docket at the location provided under the caption **ADDRESSES**.

List of Subjects in 14 CFR Part 39

Air transportation, Aircraft, Aviation safety, Incorporation by reference, Safety.

Adoption of the Amendment

Accordingly, under the authority delegated to me by the Administrator, the Federal Aviation Administration amends part 39 of the Federal Aviation Regulations (14 CFR part 39) as follows:

PART 39—AIRWORTHINESS DIRECTIVES

1. The authority citation for part 39 continues to read as follows:

Authority: 49 U.S.C. 106(g), 40113, 44701.

§ 39.13 [Amended]

2. FAA amends § 39.13 by adding a new AD to read as follows:

2000–24–23 S.N. Centrair: Amendment 39–12030; Docket No. 2000–CE–49–AD.

(a) *What gliders are affected by this AD?* This AD affects Models 101, 101A, 101P, and 101AP gliders, all serial numbers up to but not including 101A0628, certificated in any category.

(b) *Who must comply with this AD?* Anyone who wishes to operate any of the above gliders must comply with this AD.

(c) *What problem does this AD address?* The actions specified by this AD are intended to detect cracks in the airbrake control system and replace cracked parts with parts of improved design.

(d) *What actions must I accomplish to address this problem?* To address this problem, you must do the following actions:

Actions	Compliance times	Procedures
(1) Inspect the system for cracks	Within the next 60 calendar days after January 27, 2001 (the effective date of this AD), and then every 12 calendar months inspection.	Do this action following S.N. CENTRAIR Service Bulletin No. 101–16, Revision 3, dated February 2, 1999.
(2) If you detect cracks, replace airbrake control system. (i) For gliders equipped with manual aileron and airbrake control systems, install S.N. CENTRAIR part number (P/N) $YO57D or an FAA-approved equivalent part number. (ii) For gliders equipped with an automatic aileron and airbrake control system, install S.N. CENTRAIR P/N $Y818E or an FAA-approved equivalent part number.	Before further flight after the inspection	Do this action following the S.N. CENTRAIR maintenance manual.
(3) You may stop the repetitive inspection requirement of this AD by replacing the air brake control system with the applicable part referenced in this AD.	Before further flight if found cracked as required by paragraph (d)(2) of this AD; or. At any time if the part is not cracked	Not applicable.
(4) You may not install any airbrake control system that is not of the applicable part numbers referenced in paragraphs (d)(2)(i) and (d)(2)(ii) of this AD.	As of January 27, 2001 (the effective date of this AD).	Not applicable.

(e) *Can I comply with this AD in any other way?* You may use an alternative method of compliance or adjust the compliance time if:

(1) Your alternative method of compliance provides an equivalent level of safety; and

(2) The Manager, Small Airplane Directorate, approves your alternative. Submit your request through an FAA Principal Maintenance Inspector, who may add comments and then send it to the Manager, Small Airplane Directorate.

Note 1: This AD applies to each glider identified in paragraph (a) of this AD, regardless of whether it has been modified, altered, or repaired in the area subject to the requirements of this AD. For gliders that have been modified, altered, or repaired so that the

performance of the requirements of this AD is affected, the owner/operator must request approval for an alternative method of compliance in accordance with paragraph (e) of this AD. The request should include an assessment of the effect of the modification, alteration, or repair on the unsafe condition addressed by this AD; and, if you have not eliminated the unsafe condition, specific actions you propose to address it.

(f) *Where can I get information about any already-approved alternative methods of compliance?* Contact Mike Kiesov, Aerospace Engineer, FAA, Small Airplane Directorate, 901 Locust, Room 301, Kansas City, Missouri 64106; telephone: (816) 329–4144; facsimile: (816) 329–4090.

(g) *What if I need to fly the glider to another location to comply with this AD?* The FAA can issue a special flight permit under sections 21.197 and 21.199 of the Federal Aviation Regulations (14 CFR 21.197 and 21.199) to operate your glider to a location where you can accomplish the requirements of this AD.

(h) *Are any service bulletins incorporated into this AD by reference?* Actions required by this AD must be done in accordance with S.N. CENTRAIR Service Bulletin No. 101–16, Revision 3, dated February 2, 1999. The Director of the Federal Register approved this incorporation by reference under 5 U.S.C. 552(a) and 1 CFR part 51. You can get copies from S.N. CENTRAIR, Aerodome—36300 Le Blanc, France. You can look at copies at the FAA, Central Region, Office of the Regional Counsel, 901 Locust, Room 506, Kansas City, Missouri, or at the Office of the Federal Register, 800 North Capitol Street, NW, suite 700, Washington, DC.

(i) *When does this amendment become effective?*

This amendment becomes effective on January 27, 2001.

Note 2: The subject of this AD is addressed in French AD 1995–261(A) R3, dated January 26, 2000.

Issued in Kansas City, Missouri, on November 28, 2000.

William J. Timberlake,

Acting Manager, Small Airplane Directorate, Aircraft Certification Service.

[FR Doc. 00–30945 Filed 12–8–00; 8:45 am]

BILLING CODE 4910–13–U

DEPARTMENT OF TRANSPORTATION

Federal Aviation Administration

14 CFR Part 39

[Docket No. 2000–SW–42–AD; Amendment 39–12034; AD 2000–22–51]

RIN 2120–AA64

Airworthiness Directives; Model HH–1K, TH–1F, TH–1L, UH–1A, UH–1B, UH–1E, UH–1F, UH–1H, UH–1L, and UH–1P; and Southwest Florida Aviation SW204, SW204HP, SW205, and SW205A–1 Helicopters Manufactured by Bell Helicopter Textron Inc. for the Armed Forces of the United States

AGENCY: Federal Aviation Administration, DOT.

ACTION: Final rule; request for comments.

SUMMARY: This document publishes in the **Federal Register** an amendment adopting superseding Airworthiness Directive (AD) 2000–22–51, which was sent previously by individual letters to all known U.S. owners and operators of Model HH–1K, TH–1F, TH–1L, UH–1A, UH–1B, UH–1E, UH–1F, UH–1H, UH–1L, and UH–1P; and Southwest Florida Aviation SW204, SW204HP, SW205, and SW205A–1 helicopters manufactured by Bell Helicopter Textron Inc. (BHTI) for the Armed Forces of the United States. This AD requires establishing a retirement life for certain main rotor masts, creating a component history card or equivalent record, and identifying certain masts as unairworthy. This AD also requires removing the hub spring, if installed, and determining whether a main rotor mast (mast) has ever been installed on a helicopter while operated with a hub spring. Conducting certain inspections based on the retirement index number (RIN) and on whether the helicopter was ever operated with a hub spring is also required. Replacing any mast that has inadequate radius or a burr in the damper clamp splined area is also required. Finally, this AD requires sending information concerning the mast to the FAA. This amendment is prompted by the discovery of a crack in a mast with a lower RIN value than the established life limit. This action is necessary to preclude the occurrence of a fatigue crack in the damper clamp splined area of a mast. This condition, if not corrected, could result in failure of a mast or main rotor trunnion (trunnion), separation of the main rotor system, and subsequent loss of control of the helicopter.

DATES: Effective December 26, 2000, to all persons except those persons to whom it was made immediately effective by Emergency AD 2000–22–51, issued on November 2, 2000, which contained the requirements of this amendment.

Comments for inclusion in the Rules Docket must be received on or before February 9, 2001.

ADDRESSES: Submit comments in triplicate to the Federal Aviation Administration (FAA), Office of the Regional Counsel, Southwest Region, Attention: Rules Docket No. 2000–SW–42–AD, 2601 Meacham Blvd., Room 663, Fort Worth, Texas 76137. You may also send comments electronically to the Rules Docket at the following address: 9–asw–adcomments@faa.gov.

FOR FURTHER INFORMATION CONTACT: Michael Kohner, Aviation Safety Engineer, FAA, Rotorcraft Directorate, Rotorcraft Certification Office, Fort Worth, Texas 76193–0170, telephone (817) 222–5447, fax (817) 222–5783.

SUPPLEMENTARY INFORMATION: The FAA issued Emergency AD 2000–08–53 (Docket No. 2000–SW–08–AD) on April 26, 2000, which superseded AD 89–17–03, Amendment 39–6251, Docket No. 88–ASW–33 (54 FR 31935, August 3, 1989), which established RIN counting procedures for the mast assemblies installed on H–1 series surplus military helicopters. AD 2000–08–53 also incorporated life-hour adjustments for mast hub spring and helicopter usage. Since issuing AD 2000–08–53, the FAA has issued AD 2000–15–21, Amendment 39–11854, Docket 2000–SW–01–AD (65 FR 48605, August 9, 2000) to require removing masts, part number (P/N) 204–011–450–001 and –005, from service. The FAA also issued Emergency AD 2000–15–52, Docket No. 2000–SW–28–AD, on July 25, 2000, for the BHTI Model 204B, 205A, 205A–1, 205B, and 212 helicopters, which was prompted by a report of another cracked mast, similar to the masts installed on H–1 series helicopters. Metallurgical inspection revealed that the mast cracked as a result of fatigue in snap ring groove radii that were smaller than the 0.020-inch minimum allowable dimension. Detailed takeoff and lift event data for the entire life of the mast confirm that the accumulated RIN count at the time the fatigue crack was detected was approximately 68,000 when calculated in accordance with the RIN counting procedures in effect at the time of the failure.

U.S. Army Safety of Flight Message UH–1–10, dated July 19, 2000, required inspecting masts for a minimum radius of 0.020 inch or for a burr around the

circumference of the snap ring groove and removing defective masts from service. Based on that message and a review of fatigue data and previously issued AD's, the FAA has concluded that several corrections to the RIN counting procedures are required as follows:

• Recalculating the accumulated RIN and revised hours TIS to date for certain masts to correct the inadequate factors provided in AD 2000–08–53. New RIN and frequency of event per hour factors are required to calculate the accumulated RIN and revised hours TIS to properly reflect the actual level of torque (horsepower rating of helicopter) applied to the mast when it is installed on the different helicopter models affected by this AD.

• Using the new RIN factors for each takeoff and external load lift to continue the calculations for the accumulated RIN as installed on the different helicopter models affected by this AD and changing the definition for external load lift.

• Expanding the serial number (S/N) applicability for a one-time special inspection to detect inadequate radii and burrs in the snap ring grooves to include masts with S/N 00000 through 52720, 61433 through 61444, or 61457 through 61465, regardless of prefix. This action was required based on inadequate radius and burrs detected outside the S/N applicability of the previous AD.

• Reducing the compliance time to 100,000 accumulated RIN for any affected mast for a one-time special inspection to detect burrs in the snap ring grooves.

• Adding a one-time special inspection to detect inadequate radii and burrs in the snap ring grooves for any mast that has been previously installed with a hub spring.

Since the unsafe condition described is likely to exist or develop on other Model HH–1K, TH–1F, TH–1L, UH–1A, UH–1B, UH–1E, UH–1F, UH–1H, UH–1L, and UH–1P; and Southwest Florida Aviation SW204, SW204HP, SW205, and SW205A–1 helicopters manufactured by BHTI for the Armed Forces of the United States, the FAA issued Emergency AD 2000–22–51 to prevent failure of a mast or trunnion, separation of the main rotor system, and subsequent loss of control of the helicopter. The AD requires the following:

• Within 10 hours TIS, create a component history card or equivalent record.

• Within 10 hours TIS, determine and record the accumulated RIN and revised hours TIS.

• Establish a retirement life for any mast, P/N 204–011–450–007, –105, or –109, and replace any mast that has accumulated 265,000 RIN or 15,000 or more revised hours TIS and identify the removed mast as unairworthy.

• Within 25 hours TIS, remove any hub spring.

• Determine if the mast has ever been operated with a hub spring.

• Before reaching 100,000 RIN for a mast that has never been on a helicopter operated with a hub spring:

• Inspect the upper and lower snap ring groove in the damper clamp splined area for an inadequate radius and for a burr.

• Remove the mast before exceeding 100,000 RIN if any radius is inadequate or before exceeding 170,000 RIN if a burr is found, and identify such masts as unairworthy.

• Before reaching 100,000 RIN or 400 unfactored flight hours, whichever occurs first, on a mast that was installed on a helicopter with a hub spring or if the history of a hub spring installation is unknown:

• Inspect each snap ring groove for an inadequate radius or for a burr.

• Remove any mast before further flight if any groove radius is inadequate or if a burr is found, and identify such masts as unairworthy.

• After completing the inspections, send the requested information to the FAA. The requirements for retirement life hours for the trunnion remain the same as required in superseded AD 2000–08–53, Docket 2000–SW–08–AD. The short compliance time involved is required because the previously described critical unsafe condition can adversely affect the structural integrity and controllability of the helicopter. Therefore, the actions listed previously are required at the specified time intervals, and this AD must be issued immediately.

Since it was found that immediate corrective action was required, notice and opportunity for prior public comment thereon were impracticable and contrary to the public interest, and good cause existed to make the AD effective immediately by individual letters issued on November 2, 2000, to all known U.S. owners and operators of Model HH–1K, TH–1F, TH–1L, UH–1A, UH–1B, UH–1E, UH–1F, UH–1H, UH–1L, and UH–1P; and Southwest Florida Aviation SW204, SW204HP, SW205, and SW205A–1 helicopters manufactured by BHTI for the Armed Forces of the United States. These conditions still exist, and the AD is hereby published in the **Federal Register** as an amendment to section 39.13 of the Federal Aviation Regulations (14 CFR 39.13) to make it effective to all persons.

The FAA estimates that 75 helicopters of U.S. registry will be affected by this AD. It will take approximately 10 work hours per helicopter to remove and replace the mast, if necessary; 6 work hours to remove any hub spring; and 10 work hours to inspect the mast for proper radius or a burr. The approximate time necessary for calculating the accumulated RIN and for providing the requested information to the FAA is 15 work hours per helicopter. The average labor rate is $60 per work hour. Required parts will cost approximately $9,538 to replace a mast, if necessary. Based on these figures, the total cost impact of the AD on U.S. operators is estimated to be $899,850 ($11,998 per helicopter, assuming inspecting 1 mast, removing 1 hub spring, replacing 1 mast, determining the RIN calculations, and providing the requested information to the FAA).

Comments Invited

Although this action is in the form of a final rule that involves requirements affecting flight safety and, thus, was not preceded by notice and an opportunity for public comment, comments are invited on this rule. Interested persons are invited to comment on this rule by submitting such written data, views, or arguments as they may desire. Communications should identify the Rules Docket number and be submitted in triplicate to the address specified under the caption **ADDRESSES.** All communications received on or before the closing date for comments will be considered, and this rule may be amended in light of the comments received. Factual information that supports the commenter's ideas and suggestions is extremely helpful in evaluating the effectiveness of the AD action and determining whether additional rulemaking action would be needed.

Comments are specifically invited on the overall regulatory, economic, environmental, and energy aspects of the rule that might suggest a need to modify the rule. All comments submitted will be available, both before and after the closing date for comments, in the Rules Docket for examination by interested persons. A report that summarizes each FAA-public contact concerned with the substance of this AD will be filed in the Rules Docket.

Commenters wishing the FAA to acknowledge receipt of their mailed comments submitted in response to this rule must submit a self-addressed, stamped postcard on which the following statement is made:

''Comments to Docket No. 2000–SW–42–AD.'' The postcard will be date stamped and returned to the commenter.

The regulations adopted herein will not have a substantial direct effect on the States, on the relationship between the national Government and the States, or on the distribution of power and responsibilities among the various levels of government. Therefore, it is determined that this final rule does not have federalism implications under Executive Order 13132.

The FAA has determined that this regulation is an emergency regulation that must be issued immediately to correct an unsafe condition in aircraft, and that it is not a ''significant regulatory action'' under Executive Order 12866. It has been determined further that this action involves an emergency regulation under DOT Regulatory Policies and Procedures (44 FR 11034, February 26, 1979). If it is determined that this emergency regulation otherwise would be significant under DOT Regulatory Policies and Procedures, a final regulatory evaluation will be prepared and placed in the Rules Docket. A copy of it, if filed, may be obtained from the Rules Docket at the location provided under the caption **ADDRESSES.**

List of Subjects in 14 CFR Part 39

Air transportation, Aircraft, Aviation safety, Safety.

Adoption of the Amendment

Accordingly, pursuant to the authority delegated to me by the Administrator, the Federal Aviation Administration amends part 39 of the Federal Aviation Regulations (14 CFR part 39) as follows:

PART 39—AIRWORTHINESS DIRECTIVES

1. The authority citation for part 39 continues to read as follows:

Authority: 49 U.S.C. 106(g), 40113, 44701.

§ 39.13 [Amended]

2. Section 39.13 is amended by removing Amendment 39–6251 (54 FR 31935, August 3, 1989) and by adding a new airworthiness directive to read as follows:

2000–22–51 Firefly Aviation Helicopter Services (Previously Erickson Air–Crane Co.); Garlick Helicopters, Inc.; Hawkins and Powers Aviation, Inc.; International Helicopters, Inc.; Tamarack Helicopters, Inc. (Previously Ranger Helicopter Services, Inc.); Robinson Air Crane, Inc.; Williams Helicopter Corporation (Previously Scott Paper Co.); Smith Helicopters; Southern Helicopter, Inc.; Southwest Florida Aviation; Arrow Falcon Exporters, Inc. (Previously Utah State University); U.S. Helicopter, Inc.; and Western International Aviation, Inc.: Amendment 39–12034. Docket No. 2000–SW–42–AD. Supersedes Emergency AD 2000–08–53, Docket No. 2000–SW–08–AD and AD 89–17–03, Amendment 39–6251, Docket No. 88–ASW–33.

Applicability: Model HH–1K, TH–1F, TH–1L, UH–1A, UH–1B, UH–1E, UH–1F, UH–1H, UH–1L, and UH–1P; and Southwest Florida Aviation SW204, SW204HP, SW205, and SW205A–1 helicopters, manufactured by Bell Helicopter Textron Inc. (BHTI) for the Armed Forces of the United States, with main rotor mast (mast), part number (P/N) 204–011–450–007, –105, or –109, or main rotor trunnion (trunnion), P/N 204–011–105–001, installed, certificated in any category.

Note 1: This AD applies to each helicopter identified in the preceding applicability provision, regardless of whether it has been otherwise modified, altered, or repaired in the area subject to the requirements of this AD. For helicopters that have been modified, altered, or repaired so that the performance of the requirements of this AD is affected, the owner/operator must request approval for an alternative method of compliance in accordance with paragraph (c) of this AD. The request should include an assessment of the effect of the modification, alteration, or repair on the unsafe condition addressed by this AD; and if the unsafe condition has not been eliminated, the request should include specific proposed actions to address it.

Compliance: Required as indicated, unless accomplished previously.

Note 2: This AD requires using new factors to recalculate the FACTORED flight hours and the accumulated Retirement Index Number (RIN) for masts installed on certain helicopter models. This AD also expands the serial number (S/N) applicability for the one-time special inspection of the mast.

To prevent failure of a mast or trunnion, separation of the main rotor system, and subsequent loss of control of the helicopter, accomplish the following:

(a) For the mast, P/N 204–011–450–007, –105, or –109:

Note 3: The next higher assembly level for the affected P/N's are the 204–040–366 mast assemblies. Check the aircraft records for the appropriate P/N and assembly level.

(1) Within 10 hours time-in-service (TIS), create a component history card or equivalent record for the mast.

(2) Within 10 hours TIS, determine and record the accumulated RIN and revised hours TIS for the mast as follows:

(i) Review the aircraft maintenance records for the mast. If the helicopter model installation history or hours TIS of the mast is unknown, remove the mast from service, identify the mast as unairworthy, and replace it with an airworthy mast before further flight.

(ii) Determine the accumulated RIN and the revised hours TIS in accordance with the Instructions in Appendix 1. For those hours TIS the mast has been installed on a BHTI Model 204B, 205A, 205A–1, 205B, or 212 helicopter, determine the accumulated RIN in accordance with the AD's issued for those helicopters.

(iii) Record the accumulated RIN and revised hours TIS for the mast on the component history card or equivalent record. Use the revised hours TIS as the new hours TIS for the mast.

(3) Before further flight after accomplishing the requirements of paragraph (a)(2) of this AD, remove from service any mast that has accumulated 265,000 or more RIN or 15,000 or more revised hours TIS and identify the mast as unairworthy. Replace the mast with an airworthy mast.

(4) Within 25 hours TIS, remove any hub spring installed on any affected helicopter.

Note 4: U.S. Army Modification Work Order (MWO) 55–1520–242–50–1 pertains to the removal of the hub spring and replacement of any required parts. U.S. Army Safety of Flight Message UH–1–00–10 dated July 19, 2000, also pertains to the subject of this AD.

(5) Determine whether a mast with S/N 00000 through 52720, 61433 through 61444, or 61457 through 61465 (regardless of prefix), has ever been installed on a helicopter while operated with a hub spring.

(i) If a mast has never been installed on a helicopter while operated with a hub spring, before reaching 100,000 RIN, inspect the upper and lower snap ring grooves in the damper clamp splined area for:

(A) A minimum radius of 0.020 inch around the entire circumference (see Figures 1 and 2), using a 100 × or higher magnification. If any snap ring groove radius is less than 0.020 inch, identify the mast as unairworthy and replace it with an airworthy mast before exceeding 100,000 RIN.

(B) A burr (see Figures 1 through 3), using a 200 × or higher magnification. If a burr is found in any snap ring groove/spline intersection, identify the mast as unairworthy and replace it with an airworthy mast before exceeding 170,000 RIN.

(ii) If a mast has ever been installed on a helicopter while operated with a hub spring or if the history of a hub spring installation is unknown, before reaching 100,000 RIN or 400 unfactored flight hours, whichever occurs first, inspect the upper and lower snap ring grooves in the damper clamp splined area for:

(A) A minimum radius of 0.020 inch around the entire circumference (see Figures 1 and 2), using a 100 × or higher magnification. If any snap ring groove radius is less than 0.020 inch, identify the mast as unairworthy and replace it with an airworthy mast before further flight.

(B) A burr (see Figures 1 through 3), using a 200 × or higher magnification. If a burr is found in any snap ring groove/spline intersection, identify the mast as unairworthy and replace it with an airworthy mast before further flight.

(6) After accomplishing the requirements of paragraph (a)(2) of this AD, continue to calculate the accumulated RIN for the mast by multiplying all takeoff and external load lifts by the RIN factors defined in columns (D) and (G) of Table 1 of Appendix 1 of this AD.

(7) After accomplishing the requirements of paragraph (a)(2) of this AD, continue to count the hours TIS for the mast. Any hours TIS for the mast while installed on a helicopter operated with a hub spring or if the history of a hub spring installation is unknown must be factored in accordance with the instructions in Appendix 1 of this AD.

(8) This AD establishes a retirement life of 265,000 accumulated RIN or 15,000 hours TIS, whichever occurs first, for mast, P/N 204–011–450–007, –105, and –109.

(9) Within 10 days after completing the inspections required by paragraph (a)(5) of this AD, send the information contained on the AD compliance inspection report sample format contained in Appendix 2 to the Manager, Rotorcraft Certification Office, Federal Aviation Administration, Fort Worth, Texas 76193–0170, USA. Reporting requirements have been approved by the Office of Management and Budget and assigned OMB control number 2120–0056.

BILLING CODE 4910–13–P

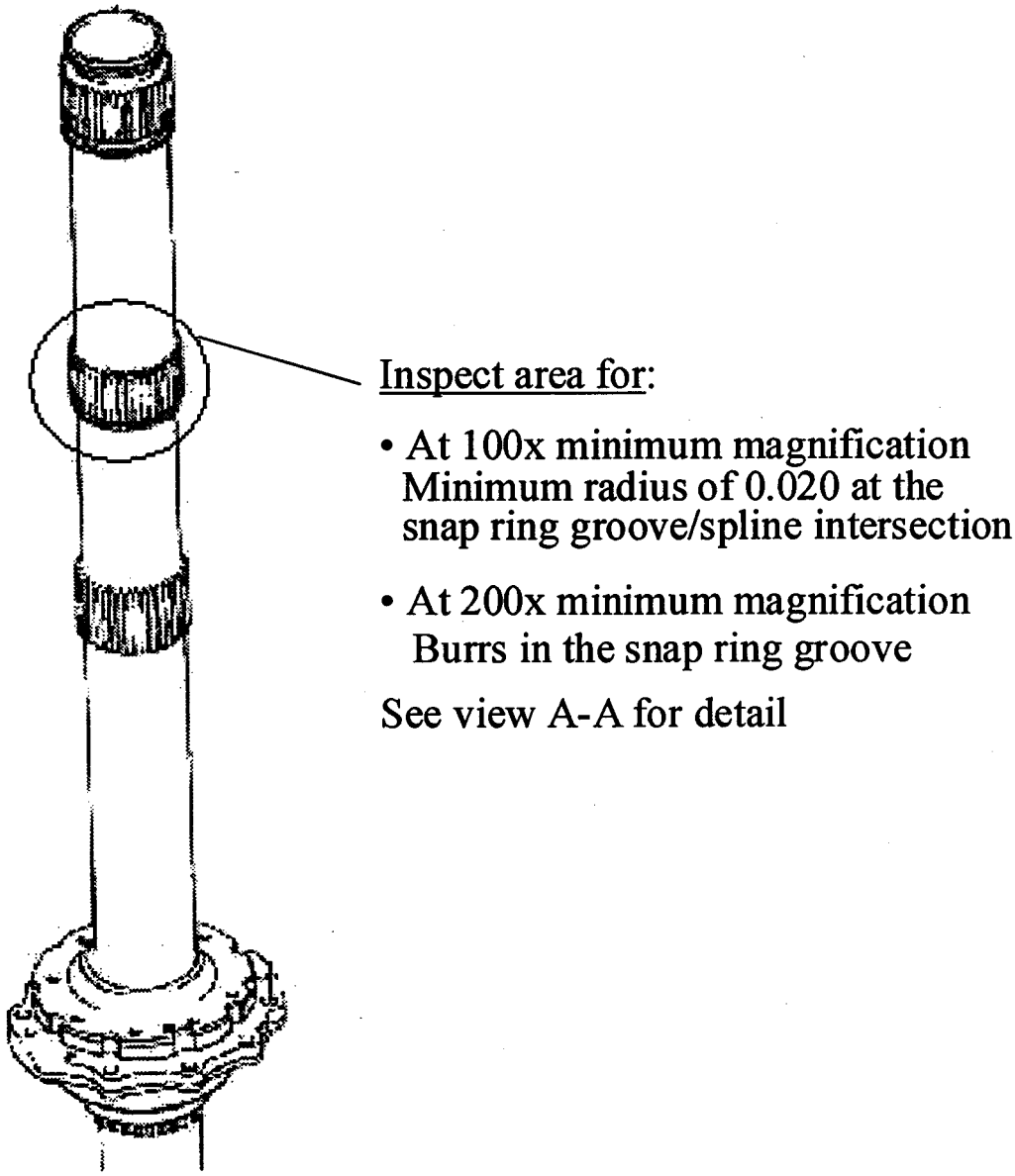

Figure 1

View A

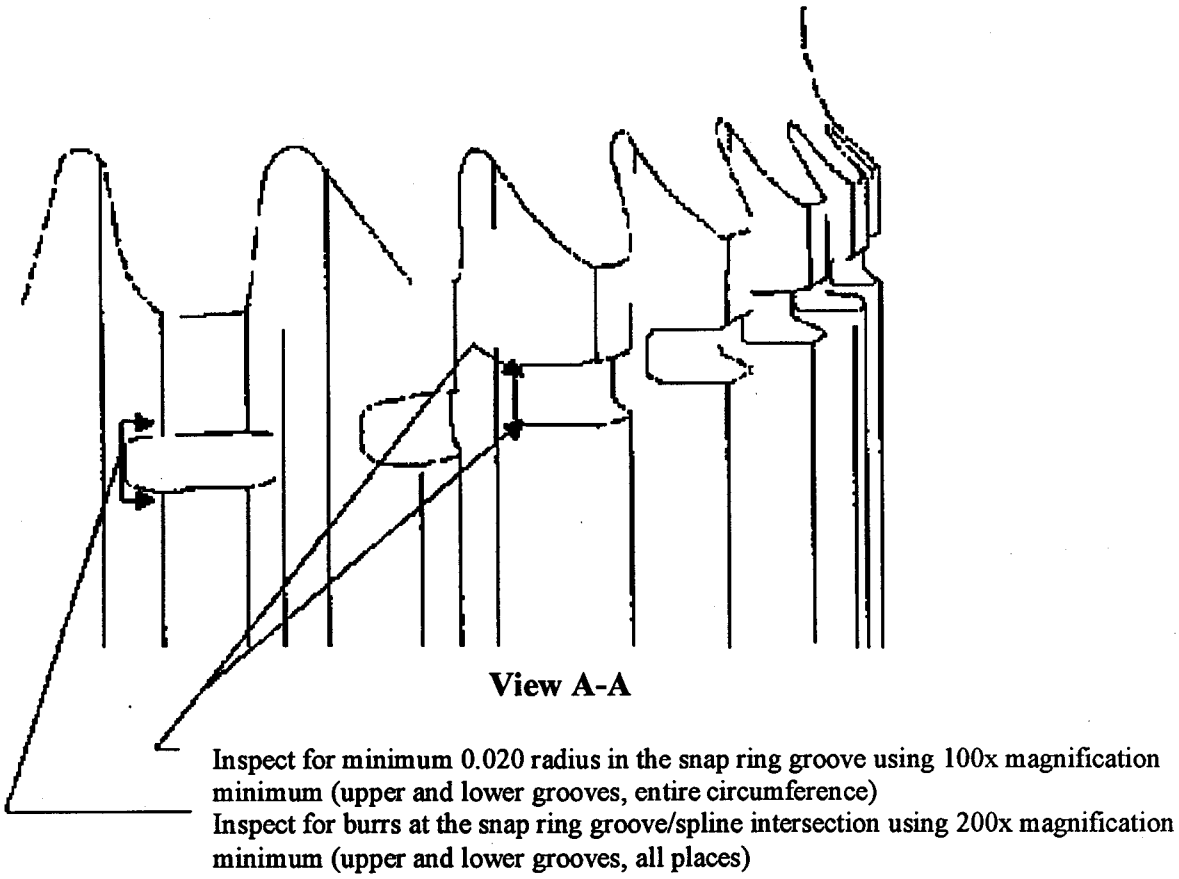

Figure 2
Snap Ring Groove/Spline Intersection

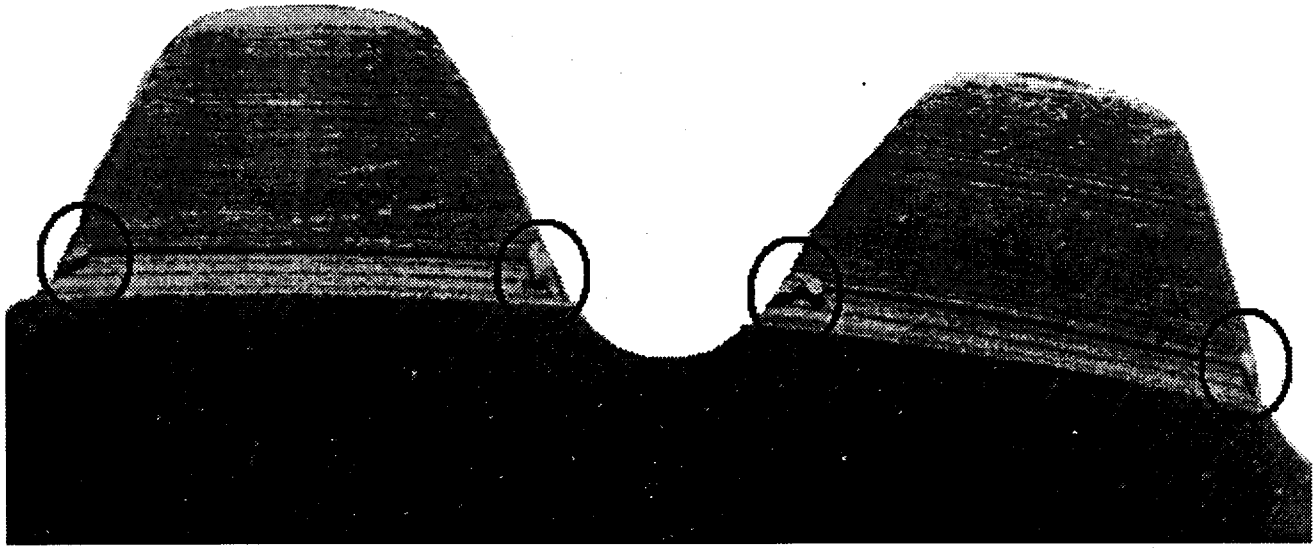

Cutaway View Looking Down from Inside Snap Ring Groove

Typical Burrs at Snap Ring Groove/Spline Intersection
Burrs are to be Inspected at 200x Minimum Magnification

Figure 3
Typical Burr at Snap Ring Groove

BILLING CODE 4910–13–C

(b) For the trunnion, P/N 204–011–105–001:

(1) Within 10 days, create a component history card or equivalent record for the trunnion and record the hours TIS accumulated on the trunnion. If the TIS cannot be determined, enter 900 hours for each year from the date the trunnion was installed.

(2) Remove any trunnion with 14,900 or more hours TIS from service within the next 100 hours TIS.

(3) Remove any trunnion with less than 14,900 hours TIS from service at or before 15,000 hours TIS.

Note 5: Paragraph (b) of this AD continues the requirements of the superseded AD for the trunnion.

(c) An alternative method of compliance or adjustment of the compliance time that provides an acceptable level of safety may be used if approved by the Manager, Rotorcraft Certification Office, FAA. Operators shall submit their request through an FAA Principal Maintenance Inspector, who may concur or comment and then send it to the Manager, Rotorcraft Certification Office.

Note 6: Information concerning the existence of approved alternative methods of compliance with this AD, if any, may be obtained from the Manager, Rotorcraft Certification Office.

(d) Special flight permits may be issued in accordance with 14 CFR 21.197 and 21.199 to operate the helicopter to a location where the requirements of this AD can be accomplished.

(e) This amendment becomes effective on December 26, 2000, to all persons except those persons to whom it was made immediately effective by Emergency AD 2000–22–51, issued November 2, 2000, which contained the requirements of this amendment.

BILLING CODE 4910–13–P

Appendix 1 to AD 2000-22-51
Instructions for Calculating RIN and Revised Hours TIS

Definitions for the Retirement Index Number:

The overall **fatigue life** of a main rotor mast is a function of the number of cycles of torque, lift, and bending loads applied to it during the various modes of operation. The mast experiences both high cycle fatigue and low cycle fatigue during operation.

The **high cycle fatigue life** of the mast is a function of high frequency but relatively low level cyclic loads, which are primarily induced by rotor rpm. The high cycle fatigue life limit for the mast is defined in terms of hours TIS because rotor rpm is basically a constant value.

The **low cycle fatigue life** of the mast is a function of the number of less frequent but relatively high level cyclic loads experienced primarily during takeoffs and external load lifts. The low cycle fatigue life limit for the mast is expressed in terms of the accumulated Retirement Index Number (RIN).

A **load cycle** is a power cycle caused by a repeating or fluctuating load that alternates from a starting power value, goes to a higher power value, and returns to the starting power value.

The **accumulated RIN** is defined as the total number of load cycles multiplied by a **RIN factor** to account for the difference in torque levels applied to the same mast (since manufactured) when installed in different helicopter models. The level of torque applied to the mast is directly proportional to the transmission output horsepower.

The ***unfactored* hours TIS** is the time from the moment a helicopter leaves the surface of the earth until it touches it at the next point of landing with no factors applied.

The **FACTORED flight hours** is the *unfactored* hours TIS multiplied by a frequency of event hour factor based on the torque (horsepower) of the helicopter model in which it was installed and the usage of the helicopter.

The **revised hours TIS** is the new hours TIS for the mast as determined by following the instructions in this appendix.

An **external load lift** is defined as a lift where the load is carried, or extends, outside of the aircraft fuselage.

Calculation of Retirement Index Number and Revised Hours TIS:

There are two methods for calculating the accumulated RIN and the revised hours TIS, depending on the available service history information for the mast. In some cases, one method will be used for a portion of the mast service history, and the other method will be used for another portion of

the mast service history. Both methods require knowledge of all the helicopter models in which the mast was installed.

Calculation of RIN and Revised Hours TIS when the Exact Number of Takeoffs and External Load Lifts is ***Known*** (Reference Tables 1 and 3):

Table 1 of Appendix 1 is the worksheet for calculating the accumulated mast RIN when the exact number of takeoffs and external load lifts *is known*. Table 3 of Appendix 1 is the worksheet that has the frequency of event hour factors to calculate the FACTORED flight hours for the *unfactored* hours TIS for the mast while installed on a helicopter operated *with* a hub spring or if the hub spring installation history *is unknown*.

The RIN factor for each external load lift is twice that specified for each takeoff because two torque events are experienced during a typical external load lift.

Using Table 1, calculate accumulated RIN as follows:

1. Enter the total number of takeoffs for the particular mast model/helicopter model combination in column (C).
2. Multiply the value entered in column (C) by the RIN factor listed in column (D), and enter the result in column (E). This is the total accumulated RIN due to takeoffs.
3. Enter the total number of external load lifts for the particular mast model/helicopter model combination in column (F).
4. Multiply the value entered in column (F) by the RIN factor listed in column (G), and enter the result in column (H). This is the accumulated RIN due to external load lifts.
5. Add the values from column (E) and column (H) and enter the result in column (I). This is the total accumulated RIN to-date for the mast for the particular mast model/helicopter model combination.
6. Add the accumulated RIN subtotals for the various mast model/helicopter combinations in column (I) and enter the result in the space provided. This is the total accumulated RIN for the mast.

Using Table 3, calculate the revised hours TIS as follows:

7. Determine the *unfactored* hours TIS for the mast while installed on a helicopter operated *with* a hub spring or if the hub spring installation history *is unknown* for each of the particular mast model/helicopter model combinations.
8. Determine the frequency of events per hour for each of the particular mast model/helicopter model combinations dividing the combined number of takeoffs and external load lifts by the corresponding *unfactored* hours TIS.

9. Multiply the value for *unfactored* hours TIS for each of the particular mast model/helicopter model combinations by the appropriate value in column (E) of Table 3 for the frequency of event hour factor. These are the total FACTORED flight hours for the particular mast model/helicopter model combinations.

10. Add the FACTORED flight hour subtotals for each of the particular mast model/helicopter model combinations. This is the total FACTORED flight hours for the mast while installed on a helicopter operated *with* a hub spring or if the hub spring installation history *is unknown.*

11. Determine the *unfactored* hours TIS for the mast while installed on a helicopter operated *without* a hub spring.

12. Add to the total FACTORED flight hours for the mast while installed on a helicopter operated *with* a hub spring or if the hub spring installation history *is unknown* to the *unfactored* hours TIS as determined in step 11. This is the total revised hours TIS for the mast when the exact number of takeoffs and external load lifts *is known*.

Calculation of RIN and Revised Hours TIS when Exact Number of Takeoffs and External Load Lifts is ***Unknown*** (Reference Tables 2, 3, and 4):

Tables 2, 3, and 4 of Appendix 1 are the worksheets for calculating the FACTORED flight hours and accumulated mast RIN when the exact number of takeoffs and external load lifts *is unknown*.

Using Tables 2, 3, and 4, calculate the accumulated mast RIN and revised hours TIS as follows:

1. Enter the *unfactored* hours TIS for the particular mast model/helicopter model combination in column (C) of Tables 2 and 3.

2. Using service history for the mast, select the appropriate frequency of event hour factor from column (E) of Tables 2 and 3 based on the total combined number of takeoffs and external load lifts per hour shown in column (D).

3. Multiply the value for *unfactored* hours TIS entered in column (C) by the appropriate value in column (E) for the frequency of event hour factor as determined in step 2. Enter the result in column (F) of Tables 2 and 3. This is the total FACTORED flight hours for the particular mast model/helicopter model combination.

4. Enter the value for FACTORED flight hours from column (F) of Tables 2 and 3 into column (C) of Table 4.

5. Using Table 4, multiply the value for FACTORED flight hours in column (C) by the appropriate RIN conversion factor listed in column (D), by the appropriate RIN adjustment factor in column (E), and enter the result in column (F). This is the accumulated RIN to-date for the particular mast model/helicopter model combination.

6. Add the accumulated RIN subtotals for the various mast model/helicopter model combinations in column (F) of Table 4 and enter the result in the space provided. This is the total accumulated RIN for the mast.

7. Add the factored flight hour subtotals for the various mast model/helicopter model combinations as determined in steps 1 through 4. This is the total revised hours TIS for the mast when the exact number of takeoffs and external load lifts *is unknown*.

Sample Mast Calculation

Given the following known service history for the mast:

Mast, P/N 204-011-450–007, was first purchased as a United States military surplus part with valid historical records. The mast had accumulated 550 hours military TIS on an Army UH-1H with a hub spring installed.

The mast was first installed on a restricted category UH-1H former military helicopter for 250 hours TIS. The helicopter had a rating of 1100 takeoff horsepower (T.O. hp) at sea level standard day conditions (SLS), and the operation of the helicopter *without* a hub spring cannot be determined. The helicopter was used for fire fighting operations and the exact number of takeoffs and external load lifts is unknown. It is known, however, that the helicopter averaged less than 15 combined takeoffs and external load lifts per hour.

The mast was then removed and subsequently installed on a restricted category UH-1E former military helicopter (1100 T.O. hp SLS rating) *without* a hub spring for 450 hours TIS. It is known that the helicopter was used primarily for aerial surveying for the first 200 hours of operation. The exact number of takeoffs and external load lifts is unknown, but it is known that the helicopter averaged less than 16 takeoffs per hour, with no external load lifts. It was subsequently used for repeated heavy lift operation for the next 250 hours of operation and averaged between 25 and 31 combined takeoffs and external load lifts per hour during this period of time.

The mast was then removed and installed on another restricted category UH-1H former military helicopter (1100 T.O. hp SLS rating) for a total of 150 hours TIS with accurate records indicating that it experienced 100 takeoffs and 2,450 external load lifts. A hub spring was installed on the helicopter for the first 50 hours of operation with a calculated average of 19 combined takeoffs and external load lifts per hour (as determined from aircraft records for the first 50 hours of operation). The hub spring was subsequently removed for the remaining 100 hours TIS.

Calculate the FACTORED flight hours and total accumulated RIN for the mast as follows:

<u>FACTORED Flight Hours and Accumulated RIN while installed in U.S. military Model UH-1H:</u>

Calculate FACTORED flight hours from Table 3 as follows:

FACTORED Flight Hours = (*unfactored* hours TIS) x (frequency of event hour factor)
= (column C) x (column E)
= (550) x (10)
= 5,500 hours

Then using Table 4, calculate the accumulated RIN as follows:

Accumulated RIN = (FACTORED flight hours) x (RIN conversion factor) x (RIN adjustment factor)
= (column C) x (column D) x (column E)
= (5,500) x (20) x (1)

= 110,000 RIN

FACTORED Flight Hours and Accumulated RIN while installed in restricted category Model UH-1H:

Calculate FACTORED flight hours from Table 3 as follows:

FACTORED Flight Hours = (*unfactored* hours TIS) x (frequency of event hour factor)
= (column C) x (column E)
= (250) x (14)
= 3,500 hours

Then using Table 4, calculate the accumulated RIN as follows:

Accumulated RIN = (FACTORED flight hours) x (RIN conversion factor) x (RIN adjustment factor)
= (column C) x (column D) x (column E)
= (3,500) x (20) x (1)

= 70,000 RIN

FACTORED Flight Hours and Accumulated RIN while installed in restricted category Model UH-1E:

Calculate FACTORED flight hours from Table 2 as follows:

FACTORED Flight Hours = (*unfactored* hours TIS) x (frequency of event hour factor)
(for first 200 hrs.) = (column C) x (column E)
= (200) x (5)
= 1,000 hours

FACTORED Flight Hours = (*unfactored* hours TIS) x (frequency of event hour factor)
(for next 250 hrs.) = (column C) x (column E)
= (250) x (10)
= 2,500 hours

Then using Table 4, calculate the accumulated RIN as follows:

Accumulated RIN = (FACTORED flight hours) x (RIN conversion factor) x (RIN adjustment factor)
= (column C) x (column D) x (column E)
= (1,000) x (20) x (1) + (2,500) x (20) x (1)
= 20,000 + 50,000

= 70,000 RIN

FACTORED Flight Hours and Accumulated RIN while installed in another restricted category Model UH-1H:

Calculate the accumulated RIN from Table 1 and the given number of takeoffs and external load lifts as follows:

Accumulated RIN = (number of takeoffs x RIN factor per takeoff) + (number of external load lifts x RIN factor per external load lifts.

= (column C) x (column D) + (column F) x (column G)
= (100) x (3) + (2,450) x (6)

= 15,000 RIN

Calculate the FACTORED flight hours for the mast while installed on a helicopter operated *with* a hub spring or if the hub spring installation history *is unknown* using the frequency of event hour factors from Table 3 as follows:

FACTORED Flight Hours = (*unfactored* hours TIS) x (frequency of event hour factor)
(w/ hub spring) = (column C) x (column E)
= (50) x (16)
= 800 hours

Unfactored Hours TIS = (*unfactored* hours TIS)
(w/o hub spring) = 100 hours

Note that the FACTORED flight hours are not used in the accumulated RIN calculations when the number of takeoffs and external load lifts *is known*.

Calculate the Total Accumulated RIN and Revised Hours TIS as follows:

The total accumulated RIN to-date for the mast is the sum of the subtotals from Tables 1 and 4.

Total Accumulated RIN = 110,000 + 70,000 + 70,000 + 15,000
= **265,000**

The total FACTORED flight hours for the mast is the sum of the subtotals from Tables 2 and 3 and the total FACTORED flight hours as determined in the preceding step 12 when the exact number of takeoff and external load lifts *is known*.

Total FACTORED Flight Hours = 5,500 + 3,500 + 1,000 + 2,500 + 800
= **13,300 hours**

The revised hours TIS to-date for the mast is the sum of the total FACTORED flight hours and the additional *unfactored* hours TIS for the mast while installed on a helicopter operated without a hub spring and the exact number of takeoffs and external load lifts *is known*.

Revised Hours TIS = 5,500 + 3,500 + 1,000 + 2,500 + 800 + 100
= 13,300 + 100
= **13,400 hours**

Both the total accumulated RIN and the revised hours TIS need to be determined and checked for exceeding the allowable life limits for the mast. Also, note that the recalculated total accumulated RIN for this sample mast would be 265,000 RIN. Therefore, this mast would be removed from service.

The values for the sample problem are shown in Tables 1 – 4 for illustration purposes only. The FACTORED flight hours TIS shown in the brackets in Table 3 are calculated for the mast while installed on a helicopter operated *with* a hub spring or if the hub spring installation history *is unknown* and the exact number of takeoffs and external load lifts *is known*. These FACTORED flight hours are not used in the accumulated RIN calculations.

Mast RIN Calculation Based on Takeoffs and External Load Lifts

Mast A/C Model Installation	Mast P/N 204-011-450	Number Of Takeoffs	RIN Factor Per Takeoff	Total Takeoff RIN	Number of External Load Lifts	RIN Factor Per External Load Lift	Total External Load Lift RIN	Accumulated RIN
(A)	(B)	(C)	(D)	(E) =(C) x (D)	(F)	(G)	(H) =(F) x (G)	(I) =(E) + (H)
Restricted Category TIS (≤700 T.O. hp SLS)	204-011-450-007		0.25			0.5		
	204-011-450-105		0.25			0.5		
	204-011-450-109		0.25			0.5		
Restricted Category TIS (700<T.O. hp SLS ≤1000)	204-011-450-007		1.5			3		
	204-011-450-105		1.5			3		
	204-011-450-109		1.5			3		
Restricted Category TIS (1000<T.O. hp SLS ≤1100)	204-011-450-007	*100*	3	*300*	*2,450*	6	*14,700*	*15,000*
	204-011-450-105		3			6		
	204-011-450-109		3			6		
Restricted Category TIS (1100<T.O. hp SLS ≤1290)	204-011-450-007		6			12		
	204-011-450-105		6			12		
	204-011-450-109		6			12		
Restricted Category TIS (>1290 T.O. hp SLS)	204-011-450-007		Contact FAA*			Contact FAA*		Contact FAA*
	204-011-450-105							
	204-011-450-109							
Total RIN=								*15,000*

*Contact FAA at (817) 222-5447

Appendix 1 - Table 1

Calculation of Mast FACTORED Flight Hours (Without a Hub Spring Installed)

Mast A/C Model Installation	Mast P/N 204-011-450 (without a hub spring installed)	*Unfactored* Hours TIS on Model	Frequency Of Events Per Hour	Frequency of Event Hour Factor	FACTORED Flight Hours On Model
(A)	(B)	(C)	(D)	(E)	(F) = (C) x (E)
Restricted Category TIS (≤700 T.O. hp SLS)	204-011-450-007, –105, or –109		1.0-37.00	1.00	
			37.01-46.00	1.25	
			46.01-55.00	1.50	
			55.01-63.00	1.75	
			Greater than 63.00	Contact FAA*	
			Unknown	1.75	
Restricted Category TIS (700<T.O. hp SLS ≤1000)	204-011-450-007, –105, or –109		1.0-7.00	1.00	
			7.01-13.00	2.00	
			13.01-18.00	3.00	
			18.01-30.00	5.00	
			30.01-41.00	7.00	
			41.01-52.00	9.00	
			52.01-63.00	11.00	
			Greater than 63.00	Contact FAA*	
			Unknown	11.00	
Restricted Category TIS (1000<T.O. hp SLS ≤1100)	204-011-450-007, –105, or –109		1.0-5.00	1.00	
			5.01-7.00	2.00	
			7.01-10.00	3.00	
		200	10.01-16.00	5.00	***1,000***
			16.01-24.00	7.50	
		250	24.01-31.00	10.00	***2,500***
			31.01-46.00	15.00	
			46.01-61.00	20.00	
			Greater than 61.00	Contact FAA*	
			Unknown	20.00	
Restricted Category TIS (1100<T.O. hp SLS ≤1290)	204-011-450-007, –105, or –109		1.0-5.00	2.10	
			5.01-7.00	4.00	
			7.01-10.00	6.00	
			10.01-15.00	9.00	
			15.01-19.00	12.00	
			19.01-25.00	16.00	
			25.01-31.00	20.00	
			31.01-46.00	30.00	
			46.01-60.00	40.00	
			Greater than 60.00	Contact FAA*	
			Unknown	40.00	
Military TIS	204-011-450-007, –105,				
(≤700 T.O. hp SLS)	or –109		All	1.00	
(≤1000 T.O. hp SLS)			All	2.00	
(≤1100 T.O. hp SLS)			All	3.50	
(≤1290 T.O. hp SLS)			All	7.00	
(>1290 T.O. hp SLS)			All	Contact FAA*	

*Contact FAA at (817) 222–5447

Appendix 1 - Table 2

Calculation of Mast FACTORED Flight Hours (With a Hub Spring Installed)

Mast A/C Model Installation	Mast P/N 204-011-450 (*with* a hub spring or the history of a hub spring installed is unknown)	*Unfactored* Hours TIS on Model	Frequency Of Events Per Hour	Frequency of Event Hour Factor	FACTORED Flight Hours On Model
(A)	(B)	(C)	(D)	(E)	(F) = (C) x (E)
Restricted Category TIS (≤700 T.O. hp SLS)	204-011-450-007, –105, or –109		1.0-6.00	10.00	
			6.01-12.00	10.25	
			12.01-21.00	10.50	
			21.01-39.00	11.00	
			39.01-63.00	11.75	
			Greater than 63.00	Contact FAA*	
			Unknown	11.75	
Restricted Category TIS (700<T.O. hp SLS ≤1000)	204-011-450-007, –105, or –109		1.0-6.00	10.00	
			6.01-15.00	12.00	
			15.01-26.00	14.00	
			26.01-37.00	16.00	
			37.01-49.00	18.00	
			49.01-63.00	21.00	
			Greater than 63.00	Contact FAA*	
			Unknown	21.00	
Restricted Category TIS (1000<T.O. hp SLS ≤1100)	204-011-450-007, –105, or –109		1.0-6.00	10.00	
			6.01-9.00	12.00	
		250	9.01-15.00	14.00	***3,500***
		<50>	15.01-21.00	16.00	***<800>***
			21.01-33.00	20.00	
			33.01-45.00	24.00	
			45.01-61.00	30.00	
			Greater than 61.00	Contact FAA*	
			Unknown	30.00	
Restricted Category TIS (1100<T.O. hp SLS ≤1290)	204-011-450-007, –105, or –109		1.0-6.00	10.00	
			6.01-11.00	15.00	
			11.01-18.00	20.00	
			18.01-26.00	25.00	
			26.01-33.00	30.00	
			33.01-40.00	35.00	
			40.01-48.00	40.00	
			48.01-60.00	50.00	
			Greater than 60.00	Contact FAA*	
			Unknown	50.00	
Military TIS					
(≤1290 hp T.O. SLS)	204-011-450-007, –105, or –109	***550***	All	10.00	***5,500***
(>1290 hp T.O. SLS)			All	Contact FAA*	

*Contact FAA at (817) 222–5447

Appendix 1 - Table 3

Mast RIN Calculation Based on Hours Time-in-Service

Mast A/C Model Installation	Mast P/N 204-011-450	FACTORED Flight Hours On Model	RIN Conversion Factor	RIN Adjustment Per AD 2000-15-52	Accumulated RIN
(A)	(B)	(C) (From Table 2 of Appendix I)	(D)	(E)	(F) =(C) x (D) x (E)
Restricted Category or Military TIS with (≤1290 T.O. hp SLS)	204-011-450-007	*12,500*	20	1	*250,000*
	204-011-450-105		20	1	
	204-011-450-109		20	1	
Restricted Category or Military TIS with (>1290 T.O. hp SLS)	204-011-450-007	Contact FAA*	Contact FAA*	Contact FAA*	Contact FAA*
	204-011-450-105				
	204-011-450-109				
Total RIN=					*250,000*

*Contact FAA at (817) 222-5447

Appendix 1 - Table 4

Subtotals for the FACTORED Flight Hours and Accumulated RIN
For Table 4 of the Sample Mast Calculation:

FACTORED Flight Hours				Accumulated RIN
5,500	X	20	=	110,000
3,500	X	20	=	70,000
3,500	X	20	=	70,000
12,500				250,000

BILLING CODE 4910–13–C

Appendix 2

Appendix 2 to AD 2000–22–51

AD Compliance Inspection Report (Sample Format) P/N 204–011–450–007/–105/–109 Main Rotor Mast

Provide the following information and mail or fax it to: Manager, Rotorcraft Certification Office, Federal Aviation Administration, Fort Worth, Texas 76193–0170, USA, Fax: 817–222–5783.

Aircraft Registration No:
Helicopter Model:
Helicopter S/N:
Mast P/N:
Mast S/N:
Mast RIN:
Mast Total TIS:

Inspection Results

Were any radii during inspection of this mast determined to be less than 0.020 inch?
If yes, what was the dimension measured?
Was a burr found in the inspected snap ring grooves?
Were cracks noted during the inspection?
Who performed this inspection?
Provide any other comments?

Issued in Fort Worth, Texas, on November 30, 2000.

Larry M. Kelly,

Acting Manager, Rotorcraft Directorate, Aircraft Certification Service.

[FR Doc. 00–31012 Filed 12–8–00; 8:45 am]

BILLING CODE 4910–13–P

DEPARTMENT OF TRANSPORTATION

Federal Aviation Administration

14 CFR Part 71

[Airspace Docket No. 00–ASO–44]

Amendment of Class E5 Airspace; Meridian, MS

AGENCY: Federal Aviation Administration (FAA), DOT.

ACTION: Final rule.

SUMMARY: This action makes a technical amendment to the Class E5 airspace at Meridian, MS. The Navy Meridian NDB has been decommissioned. Therefore, the airspace legal description must be amended to reflect this change.

EFFECTIVE DATE: 0901 UTC, March 22, 2001.

FOR FURTHER INFORMATION CONTACT: Wade T. Carpenter, Jr., Manager, Airspace Branch, Air Traffic Division, Federal Aviation Administration, P.O. Box 20636, Atlanta, Georgia 30320; telephone (404) 305–5586.

SUPPLEMENTARY INFORMATION:

History

The Navy Meridian NDB has been decommissioned. As a result the airspace legal description must be amended. This rule will become effective on the date specified in the **EFFECTIVE DATE** section. Since this action has no impact on users of the airspace in the vicinity of Meridian NAS-McCain Field, notice and public procedure under 5 U.S.C. 553(b) are unnecessary. Class E airspace designations for airspace areas extending upward from 700 feet or more above the surface of the earth are published in paragraph 6005 of FAA Order 7400.9H, dated September 1, 2000, and effective September 16, 2000, which is incorporated by reference in 14 CFR 71.1. The Class E airspace designation listed in this document will be published subsequently in the Order.

The Rule

This amendment to Part 71 of the Federal Aviation Regulations (14 CFR Part 71) amends Class E5 airspace at Meridian, MS.

The FAA has determined that this regulation only involves an established body of technical regulations for which frequent and routine amendments are necessary to keep them operationally current. It, therefore, (1) is not a ''significant regulatory action'' under Executive Order 12866; (2) is not a ''significant rule'' under DOT Regulatory Policies and Procedures (44 FR 11034; February 26, 1979); and (3) does not warrant preparation of a regulatory evaluation as the anticipated impact is so minimal. Since this is a routine matter that will only affect air traffic procedures and air navigation, it is certified that this rule will not have a significant economic impact on a substantial number of small entities under the criteria of the Regulatory Flexibility Act.

List of Subjects in 14 CFR Part 71

Airspace, Incorporation by reference, Navigation (air).

Adoption of the Amendment

In consideration of the foregoing, the Federal Aviation Administration amends 14 CFR Part 71 as follows:

PART 71—DESIGNATION OF CLASS A, CLASS B, CLASS C, CLASS D AND CLASS E AIRSPACE AREAS; AIRWAYS; ROUTES; AND REPORTING POINTS

1. The authority citation for 14 CFR Part 71 continues to read as follows:

Authority: 49 U.S.C. 106(g); 40103, 40113, 40120; EO 10854, 24 FR 9565, 3 CFR, 1959–1963 Comp., p. 389; 14 CFR 11.69.

§ 71.1 [Amended]

2. The incorporation by reference in 14 CFR 71.1 of Federal Aviation Administration Order 7400.9H, Airspace Designations and Reporting Points, dated September 1, 2000, and effective September 16, 2000, is amended as follows:

Paragraph 6005 Class E Airspace Areas Extending Upward from 700 Feet or More Above the Surface of the Earth

* * * * *

ASO MS E5 Meridian, MS [Revised]

Meridian, Key Field, MS
(Lat. 32°20′00″N, long. 88°45′04″W)
Meridian VORTAC
(Lat. 32°22′42″N, long. 88°48′15″W)
Joe Williams OLF
(Lat. 32°47′46″N, long. 88°49′54″W)
Meridian NAS-McCain Field
(Lat. 32°33′08″N, long. 88°33′20″W)
Meridian TACAN
(Lat. 32°34′42″N, long. 88°32′43″W)
Kewanee VORTAC
(Lat. 32°22′01″N, long. 88°27′30″W)

That airspace extending upward from 700 feet above the surface within an 8-mile radius of Key Field and within 2.5 miles each side of the Meridian VORTAC 315° radial, extending from the 8-mile radious 7 miles northwest of the VORTAC, and within a 7.4-mile radius of Joe Williams OLF, and within an 8-mile radius of Meridian NAS-McCain Field, and within 4 miles each side of the 020° bearing from lat. 32°33′28″N, long, 88°33′33″W, extending from the 8-mile radius to 20 miles north of Meridian TACAN, and within a 25-mile radius of the Meridian VORTAC, extending clockwise from the 341° radial to the 040° radial, and within 8 miles north and 6 miles south of the Kewanee VORTAC 273° radial, extending from the VORTAC to long. 88°45′00″W.

* * * * *

Issued in College Park, Georgia, on December 1, 2000.

Richard Biscomb,

Acting Manager, Air Traffic Division, Southern Region.

[FR Doc. 00–31479 Filed 12–8–00; 8:45 am]

BILLING CODE 4910–13–M0

DEPARTMENT OF COMMERCE

Bureau of Economic Analysis

15 CFR Part 801

[Docket No. 000609170–0336–02]

RIN 0691–AA38

International Services Surveys: BE–82, Annual Survey of Financial Services Transactions Between U.S. Financial Services Providers and Unaffiliated Foreign Persons

AGENCY: Bureau of Economic Analysis, Commerce.

ACTION: Final rule.

SUMMARY: These final rules revise regulations for the BE–82, Annual Survey of Financial Services Transactions Between U.S. Financial Services Providers and Unaffiliated Foreign Persons.

The BE–82 survey is mandatory and is conducted annually, in which years the BE–80, Benchmark Survey of Financial Services Transactions Between U.S. Financial Services Providers and Unaffiliated Foreign Persons is not conducted, by the Bureau of Economic Analysis (BEA), U.S. Department of Commerce, under the International Investment and Trade in Services Survey Act, and under the Omnibus Trade and Competitiveness Act of 1988. The annual survey will obtain data used to update the universe data, collected the BE–80 benchmark survey, on trade in financial services, by type and by country, between U.S. financial services providers and unaffiliated foreign persons. Data from the BE–82 survey (and the benchmark survey, the BE–80) are needed to monitor trade in financial services, analyze its impact on the U.S. and foreign economies, compile and improve the U.S. economic accounts, support U.S. commercial policy on financial services, conduct trade promotion, improve the ability of U.S. businesses to identify and evaluate market opportunities, and for other Government uses.

The revised rules raise the exemption level for the 2000 survey to $10 million in covered sales or purchases transactions, from $5 million on the previous (1998) survey. Raising the exemption level will reduce respondent burden, particularly for small companies. The revised rules also combine private placement services with underwriting services, combine foreign exchange brokerage services with other brokerage services, and create a separate category for electronic funds transfers. The changes on the types of services to be reported separately mirror changes introduced in the 1999 BE–80 benchmark survey. Finally, the revised rules restate the definition of ''financial services provider'' using the nomenclature of the new North American Industry Classification System that has replaced the U.S. Standard Industrial Classification System.

The changes in the types of services to be reported separately reflect BEA's experience in collecting data on financial services transactions over the past 6 years. Data collected for both private placement and foreign exchange brokerage services have been very small and do not justify the continuation of separate reporting. Electronic funds transfer services, in contrast, appear to account for a large fraction of both total receipts and total payments for ''other financial services,'' in which electronic funds transfers were previously included.

EFFECTIVE DATE: These final rules will be effective January 10, 2001.

FOR FURTHER INFORMATION CONTACT: R. David Belli, Chief, International Investment Division (BE–50), Bureau of Economic Analysis, U.S. Department of Commerce, Washington, DC 20230; phone (202) 606–9800.

SUPPLEMENTARY INFORMATION: In the September 21, 2000, **Federal Register**, volume 65, No. 184, 65 FR 57119–57121, BEA published a notice of proposed rulemaking setting forth revised reporting requirements for the BE–82, Annual Survey of Financial Services Transactions Between U.S. Financial Services Providers and Unaffiliated Foreign Persons. No comments on the proposed rules were received. Thus, these final rules are the same as the proposed rules.

These final rules amend 15 CFR part 801 to set forth revised reporting requirements for the BE–82, Annual Survey of Financial Services Transactions Between Financial Services Providers and Unaffiliated Foreign Persons. The Bureau of Economic Analysis (BEA), U.S. Department of Commerce, will conduct the survey under the International Investment and Trade in Services Survey Act (22 U.S.C. 3101–3108), hereinafter ''the Act'', and under Section 5408 of the Omnibus Trade and Competitiveness Act of 1988 (15 U.S.C. 4908). Section 4(a) of the Act (22 U.S.C. 3103(a)) provides that the President shall, to the extent he deems necessary and feasible, conduct a regular data collection program to secure current information related to international investment and trade in services, and publish for the use of the general public and United States Government agencies periodic, regular, and comprehensive statistical information collected pursuant to this subsection. In Section 3 of Executive Order 11961, the President delegated authority granted under the Act as concerns international trade in services to the Secretary of Commerce, who has redelegated it to BEA.

The major purposes of the survey are to monitor trade in financial services, analyze its impact on the U.S. and foreign economies, compile and improve the U.S. economic accounts, support U.S. commercial policy on financial services, conduct trade promotion, and improve the ability of U.S. businesses to identify and evaluate market opportunities.

BEA will conduct the BE–82 survey in years in which a BE–80 benchmark survey, or census, is not conducted. The survey will update the data provided on the universe of financial services transactions between U.S. financial services providers and unaffiliated foreign persons. Reporting is required from U.S. financial services providers who have sales to or purchases from unaffiliated foreign persons in all covered financial services combined in excess of $10 million during the reporting year. Financial services providers meeting these criteria must supply data on the amount of their sales or purchases for each covered type of service, disaggregated by country. U.S. financial services providers that have covered transactions of less than $10 million during the reporting year are asked to provide voluntary estimates of their total sales or purchases of each type of financial service.

Executive Order 12866

These final rules are not significant for purposes of E.O. 12866.

Executive Order 13132

These final rules do not contain policies with Federalism implications sufficient to warrant preparation of a Federalism assessment under E.O. 13132.

Paperwork Reduction Act

The collection of information required in these final rules has been approved by the Office of Management and Budget under the Paperwork Reduction Act. Notwithstanding any other provisions of the law, no person is required to respond to, nor shall any person be subject to a penalty for failure to comply with, a collection-of-information subject to the requirements of the Paperwork Reduction Act unless that collection displays a currently valid OMB Control Number; such a Control Number (0608–0063) has been displayed.

The survey is expected to result in the filing of reports, containing mandatory or voluntary data, from about 375 respondents. The average burden for completing the BE–82—both the mandatory and voluntary sections—is estimated to be 7 hours. Thus, the total respondent burden of the survey is estimated at 2,600 hours (375 respondents times 7 hours average burden). The actual burden will vary from reporter to reporter, depending

upon the number and variety of their financial services transactions and the ease of assembling the data. Thus, it may range from 4 hours for a reporter that has a small number and variety of transactions and easily accessible data, or that reports only in the voluntary section of the form, to 150 hours for a very large reporter that engages in a large number and variety of financial services transactions and has difficulty in locating and assembling the required data. This estimate includes time for reviewing instructions, searching existing data sources, gathering and maintaining the data needed, and completing and reviewing the collection of information.

Comments regarding the burden estimate or any other aspect of this collection of information should be addressed to: Director, Bureau of Economic Analysis (BE–1), U.S. Department of Commerce, Washington, DC 20230, and to the Office of Management and Budget, O.I.R.A., Paperwork Reduction Project 0608–0063, Washington, DC 20503 (Attention PRA Desk Officer for BEA).

Regulatory Flexibility Act

The Chief Counsel for Regulation, Department of Commerce, has certified to the Chief Counsel for Advocacy, Small Business Administration, under provisions of the Regulatory Flexibility Act (5 U.S.C. 605(b)), that these final rules will not have a significant economic impact on a substantial number of small entities. The information collection excludes most small businesses from mandatory reporting. Companies that engage in international financial services transactions tend to be quite large. In addition, the reporting threshold for this survey is set at a level that will exempt most small businesses from reporting. The BE–82 annual survey will be required only from U.S. persons with sales to, or purchases from, unaffiliated foreign persons in excess of $10 million during the reporting year, in all covered financial services transactions combined; the exemption level for the previous annual survey, covering 1998, was $5 million. Thus, the exemption level will exclude most small businesses from mandatory coverage. Of those smaller businesses that must report, most will tend to have specialized operations and activities, so they will likely report only one type of transaction; therefore, the burden on them should be small.

List of Subjects in 15 CFR Part 806

Balance of payments, Economic statistics, Foreign Trade, Penalties, Reporting and recordkeeping requirements.

Dated: November 27, 2000.

J. Steven Landefeld,

Director, Bureau of Economic Analysis.

For the reasons set forth in the preamble, BEA amends 15 CFR Part 801, as follows:

PART 801—SURVEY OF INTERNATIONAL TRADE IN SERVICES BETWEEN U.S. AND FOREIGN PERSONS

1. The authority citation for 15 CFR Part 801 continues to read as follows:

Authority: 5 U.S.C. 301; 15 U.S.C. 4908; 22 U.S.C. 3101–3108; E.O. 11961, 3 CFR, 1977 Comp., p. 86 as amended by E.O. 12013, 3 CFR, 1977 Comp., p. 147; E.O. 12318, 3 CFR, 1981 Comp., p. 173; and E.O. 12518, 3 CFR, 1985 Comp., p. 348.

2. Section 801.9 is amended by revising paragraph (b)(7) to read as follows:

§ 801.9 Reports required.

* * * * *

(b) * * *

(7) BE–82, Annual Survey of Financial Services Transactions Between U.S. Financial Services Providers and Unaffiliated Foreign Persons:

(i) A BE–82, Annual Survey of Financial Services Transactions Between U.S. Financial Services Providers and Unaffiliated Foreign Persons, will be conducted covering companies' 1995 fiscal year and every year thereafter except when a BE–80 Benchmark Survey of Financial Services Transactions Between U.S. Financial Services Providers and Unaffiliated Foreign Persons, is conducted (see § 801.11). All legal authorities, provisions, definitions, and requirements contained in § 801.1 through § 801.8 are applicable to this survey. Additional rules and regulations for the BE–82 survey are given in paragraphs (b)(7)(i)(A) through (D) of this section. More detailed instructions are given on the report from itself.

(A) Who must report—(*1*) Mandatory reporting. Reports are required from each U.S. person who is a financial services provider or intermediary, or whose consolidated U.S. enterprise includes a separately organized subsidiary or part that is a financial services provider or intermediary, and who had transactions (either sales or purchases) directly with unaffiliated foreign persons in all financial services combined in excess of $10 million during its fiscal year covered by the survey. The $10 million threshold should be applied to financial services transactions with unaffiliated foreign persons by all parts of the consolidated U.S. enterprise combined that are financial services providers or intermediaries. Because the $10 million threshold applies separately to sales and purchases, the mandatory reporting requirement may apply only to sales, to purchases, or to both sales and purchases.

(*i*) The determination of whether a U.S. financial services provider or intermediary is subject to this mandatory reporting requirement may be judgmental, that is, based on the judgement of knowledgeable persons in a company who can identify reportable transactions on a recall basis, with a reasonable degree of certainty, without conducting a detailed manual records search.

(*ii*) Reporters who file pursuant to this mandatory reporting requirement must provide data on total sales and/or purchases of each of the covered types of financial services transactions and must disaggregate the totals by country.

(*2*) Voluntary reporting. If, during the fiscal year covered, sales or purchases of financial services by a firm that is a financial services provider or intermediary, or by a firm's subsidiaries or parts combined that are financial services providers or intermediaries, are $10,000,000 or less, the U.S. person is requested to provide an estimate of the total for each type of service. Provision of this information is voluntary. Because the $10,000,000 threshold applies separately to sales and purchases, this voluntary reporting option may apply only to sales, only to purchases, or to both sales or purchases.

(B) BE–82 definition of financial services provider. Except for Monetary Authorities (*i.e.,* Central Banks), the definition of financial services provider used for this survey is identical in coverage to Sector 52—Finance and Insurance—of the North American Industry Classification System, United States, 1997. For example, companies and/or subsidiaries and other separable parts of companies in the following industries are defined as financial services providers: Depository credit intermediation and related activities (including commercial banking, holding companies, savings institutions, check cashing, and debit card issuing); nondepository credit intermediation (including credit card issuing, sales financing, and consumer lending); securities, commodity contracts, and other financial investments and related activities (including security and commodity futures brokers, dealers, exchanges, traders, underwriters, investment bankers, and providers of

securities custody services); insurance carriers and related activities (including agents, brokers, and services providers); investment advisors and managers and funds, trusts, and other financial vehicles (including mutual funds, pension funds, real estate investment trusts, investors, stock quotation services, etc.).

(C) Covered types of services. The BE–82 survey covers the same types of financial services transactions that are covered by the BE–80 benchmark survey, as listed in § 801.11(c).

(D) What to file. (*1*) the BE–82 survey consists of Forms BE–82 (A) and BE–82(B). Before completing a form BE–82 (B), a consolidated U.S. enterprise (including the top parent and all of its subsidiaries and parts combined) must complete Form BE–82 (A) to determine its reporting status. If the enterprise is subject to the mandatory reporting requirement, or if it is exempt from the mandatory reporting requirement but chooses to report data voluntarily, either a separate Form BE–82(B) for each separately organized financial services subsidiary or part of a consolidated U.S. enterprise, or a single BE–82(B) representing the sum of all covered transactions by all financial services subsidiaries or parts of the enterprise combined must be completed.

(*2*) Reporters who receive the BE–82 survey from BEA, but that are not reporting data in either the mandatory or voluntary section of any BE–82(B), must return the Exemption Claim, attached to Form BE–82 (A), to BEA.

(*ii*) [Reserved]

* * * * *

[FR Doc. 00–31341 Filed 12–8–00; 8:45 am]

BILLING CODE 3510–06–M

DEPARTMENT OF ENERGY

Federal Energy Regulatory Commission

18 CFR Part 284

[Docket No. RM96–1–015; Order No. 587–M]

Standards for Business Practices of Interstate Natural Gas Pipelines

Issued November 30, 2000.

AGENCY: Federal Energy Regulatory Commission.

ACTION: Final rule and notice of technical conference.

SUMMARY: The Federal Energy Regulatory Commission is amending § 284.12 of its regulations governing standards for conducting business practices and electronic communication with interstate natural gas pipelines to incorporate by reference the most recent version of the standards, Version 1.4, promulgated August 31, 1999 and November 15, 1999 by the Gas Industry Standards Board (GISB). The Commission also is announcing a technical conference by Commission staff to address the issues raised by a proposal to require pipelines to permit shippers to designate and rank the contracts under which gas will flow on a pipeline's system. Version 1.4 of the GISB standards can be obtained from GISB at 1100 Louisiana, Suite 3625, Houston, TX 77002, 713–356–0060, *http://www.gisb.org.*

DATES: The rule will become effective January 10, 2001. The implementation date for the regulations is May 1, 2001. Pipelines must make filings to incorporate Version 1.4 of the GISB standards into their tariffs not less than 30 days prior to May 1, 2001.

ADDRESSES: Federal Energy Regulatory Commission, 888 First Street, NE. Washington DC, 20426

FOR FURTHER INFORMATION CONTACT:

Michael Goldenberg, Office of the General Counsel, Federal Energy Regulatory Commission, 888 First Street, NE, Washington, DC 20426, (202) 208–2294

Marvin Rosenberg, Office of Markets, Tariffs, and Rates, Federal Energy Regulatory Commission, 888 First Street, NE., Washington, DC 20426, (202) 208–1283

Kay Morice, Office of Markets, Tariffs, and Rates, Federal Energy Regulatory Commission, 888 First Street, NE., Washington, DC 20426, (202) 208–0507

SUPPLEMENTARY INFORMATION:

Final Rule and Notice of Technical Conference

The Federal Energy Regulatory Commission (Commission) is amending § 284.12 of its regulations governing standards for conducting business practices and electronic communications with interstate natural gas pipelines. The Commission is incorporating by reference the most recent version of the consensus industry standards promulgated by the Gas Industry Standards Board (GISB), Version 1.4. Pipelines are required to implement these regulations on May 1, 2001. The Commission also is directing its staff to convene a technical conference to discuss whether to adopt the proposed regulation requiring pipelines to permit shippers to designate and rank the contracts under which gas will flow on a pipeline's system.

I. Background

In Order Nos. 587, 587–B, 587–C, 587–G, 587–H, 587–I, and 587–K the Commission adopted regulations to standardize the business practices and communication methodologies of interstate pipelines in order to create a more integrated and efficient pipeline grid.[1] In those orders, the Commission incorporated by reference consensus standards developed by GISB, a private, consensus standards developer composed of members from all segments of the natural gas industry.

On February 23, 2000, GISB filed with the Commission a letter stating it had adopted a revised version of its business practice and communication standards, Version 1.4. The Version 1.4 standards include the standards for implementing pipeline interactive Internet web sites, which pipelines were required to implement by June 1, 2000, as well as standards for critical notices, and standards for multi-tiered allocations.

GISB also reported on certain issues on which the Commission had requested reports in Order No. 587–G. Of significance here, GISB reported that its Executive Committee was unable to reach consensus on standards for cross-contract ranking and that its confirmations and cross contract ranking subcommittee is considered inactive. In a letter dated June 15, 2000, GISB filed a follow-up report on cross contract ranking. GISB reports that its Executive Committee was unable to achieve consensus with respect to cross contract ranking due to disagreement on certain policy issues and that in the opinion of the Executive Committee no further progress can be made. GISB further reported that its Executive Committee approved standards for title transfer tracking, but that these standards are awaiting the development of the technical standards for information requirements and technical mapping.

[1] Standards For Business Practices of Interstate Natural Gas Pipelines, Order No. 587, 61 FR 39053 (Jul. 26, 1996), III FERC Stats. & Regs. Regulations Preambles ¶ 31,038 (Jul. 17, 1996), Order No. 587–B, 62 FR 5521 (Feb. 6, 1997), III FERC Stats. & Regs. Regulations Preambles ¶ 31,046 (Jan. 30, 1997), Order No. 587–C, 62 FR 10684 (Mar. 10, 1997), III FERC Stats. & Regs. Regulations Preambles ¶ 31,050 (Mar. 4, 1997), Order No. 587–G, 63 FR 20072 (Apr. 23, 1998), III FERC Stats. & Regs. Regulations Preambles ¶ 31,062 (Apr. 16, 1998), Order No. 587–H, 63 FR 39509 (July 23, 1998), III FERC Stats. & Regs. Regulations Preambles ¶ 31,063 (July 15, 1998); Order No. 587–I, 63 FR 53565 (Oct. 6, 1998), III FERC Stats. & Regs. Regulations Preambles ¶ 31,067 (Sept. 29, 1998), Order No. 587–K, 64 FR 17276 (Apr. 9, 1999), III FERC Stats. & Regs. Regulations Preambles ¶ 31,072 (Apr. 2, 1999).

On June 30, 2000, the Commission issued a Notice of Proposed Rulemaking (NOPR) proposing to adopt Version 1.4 of the GISB standards and to adopt a regulation requiring pipelines to permit shippers to designate and rank the transportation contracts under which gas will flow on the pipeline's system.[2] The Commission stated that cross-contract ranking would enable shippers to use their transportation contracts more efficiently by enabling them to allocate gas supplies across their transportation contracts so that the shipper can choose the contract which provides for the most economical transportation.

The Commission found that while the GISB record was not entirely clear on what prevented the adoption of cross-contract ranking standards, there appeared to be agreement on a method (entity-to-entity confirmation) by which such ranking could be achieved. The disputes apparently were over the amount of supplemental information pipelines should provide to shippers and over the method of confirmation with producers, independent of the cross-contract ranking issue. The Commission solicited comments on whether these issues were integral to the cross-contract ranking standard and whether these issues could be dealt with on an individual pipeline basis rather than through a generic rulemaking.

Twenty comments were filed.[3] Pipelines supported the use of entity-to-entity confirmation, but contended the Commission should not require the provision of supplemental information or working interest owner confirmations. Local Distribution Companies (LDCs) and endusers supported the provision of supplemental information, with endusers supporting a confirmation process based on gas package identifiers. Producers supported a confirmation process with producers or their agents.

II. Discussion

A. Adoption of Version 1.4 of the Standards

The Commission is incorporating by reference into its regulations Version 1.4 of GISB's consensus standards.[4] Pipelines must implement these standards on May 1, 2001, by making compliance filings as discussed later in this order.[5]

The adoption of Version 1.4 of the standards updates and improves the standards, particularly in the areas of communication of critical notices and multi-tiered allocations.[6] GISB approved the standards under its consensus procedures.[7] No comments objected to the incorporation of these standards. As the Commission found in Order No. 587, adoption of consensus standards is appropriate because the consensus process helps ensure the reasonableness of the standards by requiring that the standards draw support from a broad spectrum of all segments of the industry. Moreover, since the industry itself has to conduct business under these standards, the Commission's regulations should reflect those standards that have the widest possible support. In § 12(d) of the National Technology Transfer and Advancement Act (NTT&AA) of 1995, Congress affirmatively requires federal agencies to use technical standards developed by voluntary consensus standards organizations, like GISB, as means to carry out policy objectives or activities.[8]

Dynegy requests clarification regarding the implementation of the standards providing for electronic notice of critical events affecting shippers. It asserts that the pipelines should provide a transition period for testing the new communication standards for critical notices before the pipelines rely solely upon Internet communication of such notices and discontinue their current communication methods. Dynegy contends that in Order No. 587-G, the Commission found that Internet communication could be sufficient notice to shippers of operational events, because the shipper could program its computers to trigger a telephone or pager. Dynegy is concerned that before shippers have to rely solely upon Internet communication, they be given the time to test whether their software can trigger a telephone or pager. Dynegy further requests that pipelines be required to continue their current method of communication until the customers software works satisfactorily.

The Commission agrees that pipelines should provide shippers with a reasonable opportunity to test the Internet communications before the pipelines dispense with existing methods of notifying shippers of critical events. Pipelines, however, will not be required to continue existing forms of communication to individual shippers until the individual shipper has been able to configure its software correctly. The shipper should have the responsibility, within a reasonable time period, to correct problems with its own software.

Altra asks that the Commission revise the implementation date for Version 1.4 of the standards so that the implementation of Version 1.4, cross-contract ranking, and title transfer tracking can occur simultaneously. Altra maintains that implementing such changes concurrently will be more economical for software providers as well as pipelines and their customers. The Commission understands that simultaneous implementation may be more efficient and generally attempts to adopt a complete version of the GISB standards at the same time. However, in this case, the Commission finds that the benefits from adopting Version 1.4 of the GISB standard should not be delayed until an indeterminate date when standards for cross-contract ranking and title transfer tracking are adopted.

B. Cross-Contract Ranking

Cross-contract ranking refers to the ability of shippers to allocate gas supplies across transportation contracts so that the shipper can choose the contract which provides for the most economical transportation. Shippers are doing business using a variety of contracts, including their own firm and interruptible contracts, and capacity release contracts with different terms and conditions. The ability to allocate gas supplies among these contracts will enhance shipper flexibility and better

[2] Standards For Business Practices Of Interstate Natural Gas Pipelines, Notice of Proposed Rulemaking, 65 FR 41885 (July 7, 2000), IV FERC Stats. & Regs. Proposed Regulations ¶ 32,552 (June 30, 2000).

[3] Those filing comments are listed on Appendix A along with the abbreviation used throughout the order.

[4] The Commission also is amending § 284.12(b)(2) of its regulations to reflect the change in GISB's address.

[5] See the discussion of compliance procedures in Section VIII, Implementation Date, at text accompanying note 20.

[6] Pipelines previously had been required to implement the interactive Internet standards in Version 1.4 by June 1, 2000. *See* 18 CFR 284.12(c)(3)(i)(B). The following are the changes from the Version 1.3 standards previously adopted by the Commission. Standards that have been revised are: 1.3.24, 3.3.17, 4.2.7, 4.2.8, 4.3.2, 4.3.8, 4.3.9, 4.3.28, 4.3.29, 4.3.34, 5.3.2, and 5.3.30. New standards are: 0.1.1, 0.1.2, 0.3.1, 1.3.47 through 1.3.63, 1.3.79, 2.3.32 through 2.3.35, 3.3.23 through 3.3.25, 4.1.22 through 4.1.38, 4.2.9 through 4.2.19, 4.3.36 through 4.3.85, 5.2.2, and 5.3.31 through 5.3.42. Revised data sets are: 1.4.1 through 1.4.7, 2.4.1 through 2.4.6, and 3.4.1 through 3.4.4. New data sets are 5.4.18 and 5.4.19.

[7] This process first requires a super-majority vote of 17 out of 25 members of GISB's Executive Committee with support from at least two members from each of the five industry segments—interstate pipelines, local distribution companies, gas producers, end-users, and services (including marketers and computer service providers). For final approval, 67% of GISB's general membership must ratify the standards.

[8] Pub L. No. 104–113, § 12(d), 110 Stat. 775 (1996), 15 U.S.C. 272 note (1997).

enable them to manage their gas supply and capacity portfolios.[9]

In Order No. 587–G, the Commission deferred adoption of regulations regarding cross-contract ranking to give GISB an opportunity to develop standards governing this practice. GISB, however, was unable to reach consensus on appropriate standards due to policy disagreements among the industry segments, and states that it cannot proceed without further guidance from the Commission on the policy questions presented.[10] All the industry segments appear to agree that developing standards for cross-contract ranking and confirmation practices can be of benefit to the industry. Because the Commission cannot resolve these issues based solely on the comments, the Commission is directing the Commission staff to establish a technical conference at which the issues can be explored in greater detail.

1. Issues Raised by Cross-Contract Ranking

While the record GISB submitted is not entirely clear, there did appear to be agreement that cross-contract ranking could be achieved through an entity-to-entity confirmation process.[11] (Appendix B reproduces the set of standards that were considered, but not approved, by GISB's Executive Committee). Disputes developed over whether along with entity-to-entity confirmation pipelines should be required to provide supplemental information to shippers and whether pipelines should confirm with working interest owners rather than exclusively with point operators. The two standards on which agreement could not be reached are standard 2 and standard 3 of proposal CXKR–2.

Standard 2 states:

As part of the confirmation and scheduling process upon request, the TSP should make available, via EBB/EDM, supplemental information obtained during or derived from the nomination process. Such supplemental information, if available, should include the TSP's Service Requester Contract and, based upon the TSP's business practice may also, on a mutually agreeable basis, include (1) a derivable indicator characterizing the type of contract and service being provided, (2) Downstream Contract Identifier and/or (3) Service Requester's Package ID.

Standard 3 states:

Absent mutual agreement to the contrary between the TSP and the Operator for confirmations at a production location,[12] the TSP should support the fact that the operator will confirm with the TSP to only the upstream entity level. These upstream entities should either confirm or nominate (at the TSP's determination) at an entity level with the TSP.

In the NOPR, the Commission proposed to require pipelines to permit shippers to designate and rank the transportation contracts under which gas will flow on each pipeline's system. The Commission generally proposed that such ranking would occur based on the entity-to-entity confirmation standards included in all the GISB proposals. The Commission, however, solicited comment on whether there is a need for a uniform generic standard setting forth additional, limited information pipelines should provide to local distribution companies or shippers and whether the need for additional information applies to all pipelines or is limited only to certain pipelines that currently provide such additional information to LDCs. With respect to the standard regarding production confirmation, the Commission asked for comment addressing the need for confirmations at the working interest level, the costs and benefits of adopting such a requirement for pipelines, shippers, and the overall efficiency of the pipeline grid, and whether a uniform requirement is necessary or whether pipelines should be permitted to choose the method of confirmation with producers that best fits their systems.

2. Comments

All commenters generally support the concept of cross-contract ranking. They differ again on the necessity of requiring supplemental information and on confirmation at receipt points. Dynegy and Altra are indifferent to whether any requirements for supplemental information or producer confirmation are adopted. Altra contends that some of the other issues, such as working interest owner confirmation, are unrelated to the cross-contract ranking issue.

The LDCs[13] that filed comments contend that provision of supplemental information concerning the type of contract, which establishes scheduling priority, is necessary for LDCs to plan their system usage, particularly in light of the requirements of retail unbundling. They contend, for instance, that LDCs need to know the priority of gas nominated to their systems so they can plan for the possibility of losing gas supplies during peak periods if interruptible or secondary firm nominations are limited. They further contend that this information on priority is needed to satisfy the requirements of some state unbundling programs that marketers have primary firm capacity for deliveries to LDC city-gates. Con Edison, for instance, raises the question of how entity-to-entity confirmation will permit LDCs to confirm gas deliveries in a situation when two behind-the-city-gate marketers both purchase gas from a third marketer at a downstream market center. It contends that without contract information, the LDC would not be able to match up the information from the marketer delivering the gas to the market center and the two behind-the-city-gate marketers. Distribution argues that the necessary information could be provided through a capacity-type indicator, which would not be burdensome for the pipelines to process. In reply comments, Distribution contends that based on the comments filed, the Commission should convene a technical conference to provide further explanation of why LDCs need supplemental contract information and why providing such information should not be burdensome for the pipelines.

The End User Group supports the concept of cross-contract ranking but claims that the NOPR proposal has two problems: it does not require pipelines to follow the rankings provided by shippers; and it does not provide shippers with the information necessary to determine what packages of gas actually flowed. Rather than aggregating information, as in the entity-to-entity confirmation method, the End Users contend that the confirmation process should be further disaggregated by confirming on a package identification

[9] For example, a shipper may nominate gas from a single producer under two contracts: a firm contract with the pipeline and a capacity release contract which has a minimum volume commitment. If that shipper receives less gas from its producer than it has nominated, it might prefer to allocate more of its gas to the capacity release contract to satisfy its minimum volume commitment. Cross-contract ranking would permit the shipper to allocate its gas to the most economical contract.

[10] The Commission previously has resolved issues on which the GISB members could not reach consensus, so that GISB could move forward and develop the necessary technical standards to implement the Commission's determination. Standards For Busines Practices Of Interstate Natural Gas Pipelines, Order No. 587–G, 63 FR 20072, 20073, 20075–78 (Apr. 23, 1998), III FERC Stats. & Regs. Regulations Preambles ¶ 31,062, at 30,663, 30–667–72 (Apr. 16, 1998)(establishing priority for firm and interruptible transportation in intra-day nominations).

[11] See Proposed Standard 1 of CXKR–1 and CXKR–2 and New Standard S–1 of CXKR–3.

[12] Production location was defined to include wellheads, platforms, plant tailgates (excluding straddle plants) and physcial wellhead aggregation points. CXKR 1, Proposed Principle 1.

[13] See comments to Cincinnati, Con Edison, Distribution, AGA.

basis.[14] They contend that frequently a customer will be receiving multiple natural gas packages from a single seller (pursuant to different contracts) and the buyer and the seller have diametrically opposed interests. The seller wants the most expensive gas to have the highest rank, while the buyer seeks to give it the lowest. The End Users contend that unless the confirmation process provides information as to which package actually flows, the shipper cannot accurately determine the package for which it must pay.

The producers (NGSA and IPAA) support a confirmation standard that would require pipelines to confirm with producers or their agents, rather than the standard discussed at GISB that would have required confirmation with all working interest owners. They contend that confirming with producers will enhance efficiency by eliminating the inefficiency of routing all adjustments through a point operator, as is done today. They also maintain that confirmation with producers will better safeguard commercially sensitive information, because producers will no longer have to route their sensitive nomination information through point operators that may have competing financial or business interests. NGSA maintains that confirmation with producers or their agents would be far less burdensome than confirmation with working interest owners.

While the pipelines generally support the cross-contract ranking standards proposed by the Commission, they contend the Commission should not require pipelines to provide the supplemental contractual information requested by the LDCs or new standards for producer confirmation.[15] They maintain that requiring supplemental information will unnecessarily complicate the confirmation process and the LDCs have not established the need for such information. Enron, for example, contends that the entity-to-entity confirmation standard will help to streamline the confirmation process, but that requiring the provision of supplemental information will defeat the very purpose of attempting to streamline the process. Williston Basin maintains that it understands only a few LDCs seek this supplemental information in order to appease state regulatory authorities and that none of the LDCs on its system require the provision of such information. The pipelines also contend that they are not all in position to confirm gas supplies with individual working interest owners.

3. Establishment of a Technical Conference

All of the commenters find that development of standards for cross-contract ranking could benefit the industry by giving shippers more flexibility in using their capacity. It also appears from the comments that since the standards were debated at GISB, some industry members have clarified or revised their proposals or put forward new proposals. In addition, some of the comments appear to go beyond the limited issue of cross-ranking, but link the cross-contract ranking issue with other issues relating to standardization of the confirmation process.

Given the issues raised and the new proposals included in some of the comments, the Commission needs additional information to determine how best to proceed. It is, therefore, directing staff to convene a technical conference in which the industry and staff can discuss these issues to clarify what is in dispute and to determine if common ground can be found. The technical conference will be transcribed so that the Commission and those who cannot attend can be apprised of the discussion. Staff also will establish a schedule for further comments to be filed based on the discussion at the technical conference.

Among the issues that should be considered at the conference are:

- How confirmation takes place using entity-to-entity confirmation and contract confirmation.
- How package identification currently is used in nomination and confirmation processes.
- How the issues relating to cross-contract ranking differ depending on the nomination model used by the pipeline, i.e, pathed, non-pathed, or pathed non-threaded.
- Whether cross-contract ranking can be achieved efficiently without entity-to-entity confirmation.
- Whether verification of a shipper's contractual priority needs to occur on a daily basis through the confirmation process or whether priority can be verified in other ways, for example, by examining the shipper's contract or using the Index of Customers.
- Whether a uniform resolution of the need for supplemental information is needed or whether this issue can be resolved on a case-by-case basis, for example, by requiring those pipelines that previously provided contract information to continue that practice, while not imposing additional burdens on other pipelines.
- Whether, if confirmation of transportation priority is needed, a priority indicator, as Distribution suggests, would be a reasonably burden-free method of transmitting the information.
- Whether entity-to-entity confirmation has value in simplifying the confirmation process or whether further disaggregation to the gas package identification level is necessary.
- Whether gas package identification would protect customers against the possibility that the seller will allocate all gas supplies to the highest price contract or whether such protection can be better achieved through the contract between buyer and seller. For instance, even if confirmation was at the package identification level, the seller would still rank the most expensive package first.
- Whether the proposal to limit confirmations to producers, rather than working interest owners, meaningfully reduces the confirmation burden.
- Whether producers can use independent third-parties, as opposed to commercially interested point operators, to handle the confirmation process with respect to that information considered the most sensitive.

III. Notice of Use of Voluntary Consensus Standards

Office of Management and Budget Circular A–119 (§ 11) (February 10, 1998) provides that federal agencies should publish a request for comment in a Final Rule when the agency is seeking to issue or revise a regulation that contains a standard identifying whether a voluntary consensus standard or a government-unique standard is being proposed. In this final rule, the Commission is incorporating by reference Version 1.4 (August 31 and November 15, 1999) of the voluntary consensus standards developed by GISB.

IV. Information Collection Statement

OMB's regulations in 5 CFR 1320.11 require that it approve certain reporting and recordkeeping requirements (collections of information) imposed by an agency. Upon approval of a collection of information, OMB shall assign an OMB control number and an expiration date. Respondents subject to the filing requirements of this Rule shall not be penalized for failing to respond to these collections of information unless the collections of information display valid OMB control numbers.

[14] The GISB standards define a package identifier as ''a way to differentiate between discrete business transactions.'' Nominations Related Standards 1.2.5, 18 CFR 284.12(b)(i).

[15] See Comments by INGAA, Enron, ANR, Columbia Gulf, Kinder Morgan, Koch, Panhandle, Williams, Williston Basin.

The collections of information related to this Final Rule fall under the existing reporting requirements of: FERC–545, Gas Pipeline Rates: Rate Change (Non-Formal) (OMB Control No. 1902–0154) and FERC–549C, Standards for Business Practices of Interstate Natural Gas Pipelines (OMB Control No. 1902–0174). The following burden estimates are related only to this rule and include the costs of complying with GISB's version 1.4 standards. The burden estimates are primarily related to start-up for implementing the latest version of the standards and data sets and will not be on-going costs.

Public Reporting Burden: (Estimated Annual Burden)

Data collection	Number of respondents	Number of responses per respondent	Estimated burden hours per response	Total annual hours
FERC–545	93	1	38	3,534
FERC–549C	93	1	1,766	164,238

The total annual hours for collection (including recordkeeping) are estimated to be 167,772. The average annualized cost for all 93 respondents is projected to be the following:

	FERC–545	FERC–549C
Annualized Capital/ Startup Costs	$195,996	$9,108,655
Annualized Costs (Operations & Maintenance)	0	0
Total Annualized Costs	195,996	9,108,655

In the Notice of Proposed Rulemaking (NOPR), the Commission proposed to adopt a regulation requiring pipelines to permit cross-contract ranking. However, this rule does not adopt that proposed regulation but instead directs staff to convene a technical conference to discuss whether to adopt the proposed regulation. For this reason, the burden estimates have been adjusted to remove the burden included in the NOPR for complying with the Commission's proposed regulation requiring pipelines to permit cross-contract ranking. The burden estimate for FERC–545 is unchanged because the exclusion of cross-contract ranking will not create a significant difference in the original burden estimate for tariff filings. However, the burden estimate for FERC–549C has been reduced to eliminate the burden estimate associated with the cross-contract ranking proposal in the NOPR.

The Commission regulations adopted in this rule are necessary to further the process begun in Order No. 587 of creating a more efficient and integrated pipeline grid by standardizing the business practices and electronic communications of interstate pipelines. Adoption of these regulations will update the Commission's regulations relating to business practices and communication protocols to conform to the latest version, Version 1.4, approved by GISB.

The Commission has assured itself, by means of its internal review, that there is specific, objective support for the burden estimates associated with the information requirements. The information required in this Final Rule will be reported directly to the industry users and later be subject to audit by the Commission. This information also will be retained for a three year period. The implementation of these data requirements will help the Commission carry out its responsibilities under the Natural Gas Act and conforms to the Commission's plan for efficient information collection, communication, and management within the natural gas industry.

Interested persons may obtain information on the reporting requirements by contacting the following: Federal Energy Regulatory Commission, 888 First Street, N.E., Washington, D.C. 20426 [Attention: Michael Miller, Office of the Chief Information Officer, phone (202)208–1415, fax (202)208–2425, E-mail mike.miller@ferc.fed.us]; or the Office of Management and Budget [Attention: Desk Officer for the Federal Energy Regulatory Commission, phone 202–395–3087, fax (202)395–7285].

V. Environmental Analysis

The Commission is required to prepare an Environmental Assessment or an Environmental Impact Statement for any action that may have a significant adverse effect on the human environment.[16] The Commission has categorically excluded certain actions from these requirements as not having a significant effect on the human environment.[17] The actions taken here fall within categorical exclusions in the Commission's regulations for rules that are clarifying, corrective, or procedural, for information gathering, analysis, and dissemination, and for sales, exchange, and transportation of natural gas that requires no construction of facilities.[18] Therefore, an environmental assessment is unnecessary and has not been prepared in this final rule.

VI. Regulatory Flexibility Act Certification

The Regulatory Flexibility Act of 1980 (RFA)[19] generally requires a description and analysis of final rules that will have significant economic impact on a substantial number of small entities. The regulations adopted here impose requirements only on interstate pipelines, which are not small businesses, and, these requirements are, in fact, designed to reduce the difficulty of dealing with pipelines by all customers, including small businesses. Accordingly, pursuant to § 605(b) of the RFA, the Commission hereby certifies that the regulations proposed herein will not have a significant adverse impact on a substantial number of small entities.

VII. Document Availability

In addition to publishing the full text of this document in the **Federal Register**, the Commission provides all interested persons an opportunity to view and/or print the contents of this document via the Internet through FERC's Home Page (*http://www.ferc.fed.us*) and in FERC's Public Reference Room during normal business hours (8:30 a.m. to 5 p.m. Eastern time) at 888 First Street, N.E., Room 2A, Washington, DC 20426.

[16] Order No. 486, Regulations Implementing the National Environmental Policy Act, 52 FR 47897 (Dec. 17, 1987), FERC Stats. & Regs. Preambles 1986–1990 ¶ 30,783 (1987).

[17] 18 CFR 380.4

[18] *See* 18 CFR 380.4(a)(2)(ii), 380.4(a)(5), 380.4(a)(27).

[19] 5 U.S.C. 601–612.

From FERC's Home Page on the Internet, this information is available in both the Commission Issuance Posting System (CIPS) and the Records and Information Management System (RIMS).

—CIPS provides access to the texts of formal documents issued by the Commission since November 14, 1994.

—CIPS can be accessed using the CIPS link or the Energy Information Online icon. The full text of this document is available on CIPS in ASCII and WordPerfect 8.0 format for viewing, printing, and/or downloading.

—RIMS contains images of documents submitted to and issued by the Commission after November 16, 1981. Documents from November 1995 to the present can be viewed and printed from FERC's Home Page using the RIMS link or the Energy Information Online icon. Descriptions of documents back to November 16, 1981, are also available from RIMS-on-the-Web; requests for copies of these and other older documents should be submitted to the Public Reference Room.

User assistance is available for RIMS, CIPS, and the Website during normal business hours from our Help line at (202) 208–2222 (E-Mail to *WebMaster@ferc.fed.us*) or the Public Reference Room at (202) 208–1371 (E-Mail to *public.referenceroom@ferc.fed.us*).

During normal business hours, documents can also be viewed and/or printed in FERC's Public Reference Room, where RIMS, CIPS, and the FERC Website are available. User assistance is also available.

VIII. Implementation Date

Pipelines must implement these regulations on May 1, 2001. Pipelines must file revised tariff sheets to incorporate Version 1.4 of the standards into their tariffs since their tariffs incorporated by reference an older version number.[20] To the extent pipelines have individual tariff provisions based on these standards, pipelines also will have to conform their tariffs to the new standards.[21] The tariff changes must be filed not less than 30 days prior to the date for implementing Version 1.4 of the standards.

IX. Effective Date

These regulations are effective January 10, 2001. The Commission has determined, with the concurrence of the Administrator of the Office of Information and Regulatory Affairs of OMB, that this rule is not a ''major rule'' as defined in Section 351 of the Small Business Regulatory Enforcement Fairness Act of 1996.

List of Subjects in 18 CFR Part 284

Continental shelf, Incorporation by reference, Natural gas, Reporting and recordkeeping requirements.

By the Commission.

David P. Boergers,

Secretary.

In consideration of the foregoing, the Commission proposes to amend Part 284, Chapter I, Title 18, *Code of Federal Regulations,* as set forth below.

PART 284—CERTAIN SALES AND TRANSPORTATION OF NATURAL GAS UNDER THE NATURAL GAS POLICY ACT OF 1978 AND RELATED AUTHORITIES

1. The authority citation for Part 284 continues to read as follows:

Authority: 15 U.S.C. 717–717w, 3301–3432; 42 U.S.C. 7101–7532; 43 U.S.C. 1331–1356.

2. In § 284.12

a. Paragraphs (b)(1)(i) through (v) are revised to read as set forth below.

b. In paragraph (b)(2), remove the words ''1100 Louisiana, Suite 4925'' and add, in their place, the words ''1100 Louisiana, Suite 3625''.

§ 284.12 Standards for pipeline business operations and communications.

* * * * *

(b) * * *

(1) * * *

(i) Nominations Related Standards (Version 1.4, August 31, 1999);

(ii) Flowing Gas Related Standards (Version 1.4, August 31, 1999) with the exception of Standards 2.3.29 and 2.3.30;

(iii) Invoicing Related Standards (Version 1.4, August 31, 1999);

(iv) Electronic Delivery Mechanism Related Standards (Version 1.4, November 15, 1999) with the exception of Standard 4.3.4; and

(v) Capacity Release Related Standards (Version 1.4, August 31, 1999).

* * * * *

Note: The following Appendices will not appear in the Code of Federal Regulations

Appendix A

COMMENTS FILED—DOCKET NO. RM96–1–015

Commenter	Abbreviation
Altra Energy Technologies, Inc.	Altra
American Gas Association	AGA
ANR Pipeline Company and Colorado Interstate Gas Company	ANR
Cincinnati Gas & Electric Company, Union Light, Heat and Power Company, and Lawrenceburg Gas Company	Cincinnati
Columbia Gulf Transmission Company	Columbia Gulf
Consolidated Edison Company of New York, Inc. and Orange and Rockland Utilities, Inc	Con Edison
Duke Energy Gas Transmission (Algonquin Gas Transmission Duke Company, East Tennessee Natural Gas Company, and Texas Eastern Transmission Corporation).	Duke
Dynegy Marketing and Trade	Dynegy
El Paso Energy Corporation Interstate Pipelines (El Paso Natural Gas Company, Gulf States Transmission Corporation, Midwestern Gas Transmission Company, Mojave Pipeline Company, Southern Natural Gas Company, and Tennessee Gas Pipeline Company).	El Paso Energy
End User Group (Arizona Public Service Company, The Boeing Company, Defense Energy Support Center, Midland Co-generation Venture Limited Partnership, Midwest Energy, Inc., Salt River Project, Phelps Dodge Corporation, and Tennessee Valley Authority).	End User Group
Enron Interstate Pipelines	Enron

[20] *See* Texas Eastern Transmission Corporation, 77 FERC ¶ 61,175, at 61,646 (1996) (pipelines incorporating standards by reference in their tariffs must include number and version).

[21] In filing to implement Version 1.4, pipelines need to change all references to GISB standards in their tariffs to Version 1.4. The version number applies to all standards contained in GISB's Version 1.4 Standards Manuals, including standards that have not changed from prior versions.

COMMENTS FILED—DOCKET NO. RM96–1–015—Continued

Commenter	Abbreviation
Independent Petroleum Association of America	IPAA
Interstate Natural Gas Association of America	INGAA
Kinder Morgan Interstate Pipelines (Natural Gas Pipeline Company of America and Kinder Morgan Interstate Gas Transmission LLC).	Kinder Morgan
Koch Gateway Pipeline Company	Koch
National Fuel Gas Distribution Corporation	Distribution
Natural Gas Supply Association	NGSA
Panhandle Eastern Pipe Line Company and Trunkline Gas Company	Panhandle
Williams Gas Pipeline Company (Transcontinental Gas Pipe Line Corporation, Texas Gas Transmission Corporation, Williams Gas Pipelines Central, Inc., Northwest Pipeline Corporation, Cove Point LNG Limited Partnership, and Kern River Gas Transmission Company).	Williams
Williston Basin Interstate Pipeline Company	Williston Basin

Appendix B

Cross-Contract Ranking Standards GISB Considered, But Did Not Adopt

Standards Considered at the November 11, 1999 GISB Executive Committee Meeting

CXKR–1

S1 Proposed Standard 1

Absent mutual agreement to the contrary, the standard level of confirmation should be entity to entity.

S2 Revised Proposed Standard 2

As part of the confirmation and scheduling process between a Transportation Service Provider (TSP) and a Local Distribution Company (LDC), upon request by the LDC, the TSP should make available, via EBB/EDM, supplemental information obtained during or derived from the nomination process necessary for the LDC to meet its statutory and/or regulatory obligations. Such supplemental information, if available, should include the TSP's Service Requester Contract and, based upon the TSP's business practice may also, on a mutually agreeable basis, include (1) a derivable indicator characterizing the type of contract and service being provided, (2) Downstream Contract Identifier and/or (3) Service Requester's Package ID .

S3 Proposed Standard 3

Absent mutual agreement to the contrary between the TSP and the Operator for confirmations at a production location, the TSP should support the fact that the operator will confirm with the TSP to only the upstream entity level. These upstream entities should either confirm or nominate (at the TSP's determination) at an entity level with the TSP.

D1 Proposed Definition 1

Production locations includes wellheads, platforms, plant tailgates (excluding straddle plants) and physical wellhead aggregation points.

S4 Proposed Standard 4

When nominated quantities exceed available capacity, the Transportation Service Provider (TSP) should first utilize its tariff requirements to assign capacity to each service level for each Service Requester (SR). The TSP should then use the SR's provided scheduling ranks to determine how the available quantities should be distributed within a single service level. The SR's provided scheduling ranks (as applicable) should be used as follows:

For reductions identified at or upstream of the constraint location, the order for application of ranks is Receipt Rank (Priority), Upstream Rank (Priority), Delivery Rank (Priority), Downstream Rank (Priority).

For reductions identified at or downstream of the constraint location, the order for application of ranks is Delivery Rank (Priority), Downstream Rank (Priority), Receipt Rank (Priority), Upstream Rank (Priority).

S5 Proposed Standard 5

When applying a confirmation reduction to an entity at a location, the Transportation Service Provider (TSP) should use the Service Requester's (SR's) scheduling ranks provided on all nominations for that location and entity to determine the appropriate nomination(s) to be reduced, except where superseded by the TSP's tariff, general terms and conditions, or contractual obligations. The SR's provided scheduling ranks (as applicable) should be used as follows:

For receipt side reductions, the order for application of ranks is Upstream Rank (Priority), Receipt Rank (Priority), Delivery Rank (Priority), and Downstream Rank (Priority).

For delivery side reductions, the order for application of ranks is Downstream Rank (Priority), Delivery Rank (Priority), Receipt Rank (Priority), and Upstream Rank (Priority).

P1 Proposed Principle 1

In order to effectuate cross contract ranking, the level of confirmation at a location should occur at the entity to entity level.

S6 Revised Proposed Standard 6

Transportation Service Providers should utilize Standard 1.3.7 for ranks submitted in a nomination.

CXKR–2

Retain all standards in CXKR–1 with the exception of Standard S2 which would be revised to read as follows:

S2 Amended Revised Proposed Standard 2

As part of the confirmation and scheduling process upon request, the TSP should make available, via EBB/EDM, supplemental information obtained during or derived from the nomination process. Such supplemental information, if available, should include the TSP's Service Requester Contract and, based upon the TSP's business practice may also, on a mutually agreeable basis, include (1) a derivable indicator characterizing the type of contract and service being provided, (2) Downstream Contract Identifier and/or (3) Service Requester's Package ID.

CXKR–3

P1 New Principle

In order to effectuate cross contract ranking, the level of confirmation at a location should occur at the entity-to-entity level.

S1 New Standard

The standard level of confirmation should be entity to entity.

S4 New Standard

When nominated quantities exceed available capacity on a Transportation Service Provider's (TSP's) system, such TSP should first utilize its tariff requirements to assign capacity to each service level for each Service Requester (SR). The TSP should then use the SR's provided scheduling ranks as provided in the SR's nomination to determine how the available quantities should be distributed within a single service level.

The SR's provided scheduling ranks (as applicable) should be used as follows:

For reductions identified at or upstream of the constraint location, the order for application of ranks is Receipt Rank (Priority), Upstream Rank (Priority), Delivery Rank (Priority), Downstream Rank (Priority).

For reductions identified at or downstream of the constraint location, the order for application of ranks is Delivery Rank (Priority), Downstream Rank (Priority), Receipt Rank (Priority), Upstream Rank (Priority).

S5 New Standard

When applying a confirmation reduction to an entity (Service Requester (SR)) at a location, the Transportation Service Provider (TSP) should use such SR's scheduling ranks as provided on that SR's nominations at that location to determine the appropriate nominations(s) to be reduced, except where superceded by the TSP's tariff, general terms and conditions, or contractual obligations.

The SR's provided scheduling ranks (as applicable) should be used as follows:

For receipt side reductions, the order for application of ranks is Upstream Rank (Priority), Receipt Rank (Priority), Delivery Rank (Priority), Downstream Rank (Priority).

For delivery side reductions, the order for application of ranks is Downstream Rank (Priority), Delivery Rank (Priority), Receipt Rank (Priority), Upstream Rank (Priority).

[FR Doc. 00–30979 Filed 12–8–00; 8:45 am]

BILLING CODE 6717–01–P

DEPARTMENT OF LABOR

Mine Safety and Health Administration

30 CFR Part 42, 47, 56, 57, and 77

RIN: 1219–AA47

Hazard Communication (HazCom)

AGENCY: Mine Safety and Health Administration (MSHA), Labor.

ACTION: Notice of public hearing and extension of comment period.

SUMMARY: MSHA is announcing a public hearing regarding the Agency's interim final rule on Hazard Communication and extending the comment period. The hazard communication requirements were published in the **Federal Register** on October 3, 2000 (65 FR 59048). The hearing will be held under section 101 of the Federal Mine Safety and Health Act of 1977.

DATES: The hearing will be held on December 14, 2000. The hearing will last from 9:00 a.m. to 5:00 p.m., but will continue into the evening if necessary. The comment period is extended until December 19, 2000.

ADDRESSES: The hearing will be held at the following location: Department of Labor, Office of Administrative Law Judges Courtroom, 800 K Street N.W., Suite 400N, Washington, D.C.

Comments may be transmitted by electronic mail, fax, or mail. Comments by electronic mail must be clearly identified as such and sent to this e-mail address: comments@MSHA.gov. Comments by fax must be clearly identified as such and sent to: MSHA, Office of Standards, Regulations, and Variances, 703–235–5551. Mail comments should be clearly identified as such and sent to MSHA, Office of Standards, Regulations, and Variances, 4015 Wilson Boulevard, Room 631, Arlington, VA 22203–1984. Interested persons are encouraged to supplement written comments with computer files or disks; please contact the Agency with any questions about format.

FOR FURTHER INFORMATION CONTACT: David L. Meyer, Director; MSHA Office of Standards, Regulations, and Variances; phone 703–235–1910.

SUPPLEMENTARY INFORMATION: We request that you notify us of your intention to make an oral presentation prior to the hearing date, but it is not required that you do so. The hearing will be conducted in an informal manner by a panel of MSHA officials. Although formal rules of evidence or cross examination will not apply, the presiding official may exercise discretion to ensure the orderly progress of the hearing and may exclude irrelevant or unduly repetitious material and questions.

The hearing will begin with an opening statement from MSHA, followed by an opportunity for members of the public to make oral presentations. The hearing panel may ask questions of speakers. At the discretion of the presiding official, the time allocated to speakers for their presentations may be limited. In the interest of conducting a productive hearing, MSHA will schedule speakers in a manner that allows all points of view to be heard as effectively as possible.

A verbatim transcript of the proceeding will be prepared and made part of the rulemaking record. A copy of the hearing transcript will be made available for public review.

MSHA will accept additional written comments and other appropriate data for the record from any interested party, including those not presenting oral statements. Written comments and data submitted to MSHA will be included in the rulemaking record. To allow for the submission of post-hearing comments, the comment period is extended and the record will remain open until December 19, 2000.

Dated: December 7, 2000.

J. Davitt McAteer,

Assistant Secretary for Mine Safety and Health.

[FR Doc. 00–31543 Filed 12–7–00; 1:20 pm]

BILLING CODE 4510–43–P

LIBRARY OF CONGRESS

Copyright Office

37 CFR Part 201

[Docket No. RM 2000–3B]

Public Performance of Sound Recordings: Definition of a Service

AGENCY: Copyright Office, Library of Congress.

ACTION: Final rule.

SUMMARY: The Copyright Office is amending its regulatory definition of a ''Service'' for purposes of the statutory license governing the public performance of sound recordings by means of digital audio transmissions in order to clarify that transmissions of a broadcast signal over a digital communications network, such as the Internet, are not exempt from copyright liability under section 114(d)(1)(A) of the Copyright Act.

DATES: Effective December 11, 2000.

FOR FURTHER INFORMATION CONTACT: David O. Carson, General Counsel, or Tanya M. Sandros, Senior Attorney, Copyright Arbitration Royalty Panel, P.O. Box 70977, Southwest Station, Washington, D.C. 20024. Telephone: (202) 707–8380. Telefax: (202) 252–3423.

SUPPLEMENTARY INFORMATION:

Procedural History

On March 16, 2000, the Copyright Office published a notice of proposed rulemaking (''NPRM'') seeking comment on whether the transmission of an AM/FM radio broadcast signal over the Internet by the broadcaster that originates the AM/FM signal is exempt from copyright liability under the exemption to the digital performance right in sound recordings set forth in section 114 of the Copyright Act, title 17 of the United States Code. 65 FR 14227 (March 16, 2000). The Office initiated this rulemaking proceeding in response to a petition from the Recording Industry Association of America (''RIAA'').

In its petition, RIAA asked the Office to adopt a rule ''clarifying that a broadcaster's transmission of its AM or FM radio station over the Internet . . . is not exempt from copyright liability under section 114(d)(1)(A).'' RIAA also believes that ''until the Office rules, the parties will not agree on who qualifies for the Section 114 performance license.'' Petition at 7.

The Office agreed with RIAA's observation and postponed the pending rate adjustment proceeding, the purpose of which is to set the rates and terms for the public performance of a sound recording by means of digital audio transmissions under the section 114 statutory license and to establish the rates and terms for the making of an ephemeral recording in accordance with the section 112 statutory license. *See* 63 FR 65555 (November 27, 1998); 64 FR 52107 (September 7, 1999). The Office took this action because it recognized that the outcome of the rulemaking would have the effect of deciding whether the rates and terms set in that

proceeding would apply to broadcasters who stream their AM or FM radio stations over the Internet. 65 FR 14227 (March 16 , 2000).

A finding that the section 114(d)(1)(A) exemption covered a digital transmission of an AM or FM radio station made by an FCC-licensed broadcaster, including transmissions made by the broadcaster over the Internet, would likely mean that broadcasters, who are currently parties to the rate adjustment proceeding, would withdraw from the proceeding since the rates and terms to be decided would not apply to any transmission made by an FCC-licensed broadcaster. This, in turn, would narrow the scope of the issues and evidence presented to the CARP.

After the publication of the NPRM, the National Association of Broadcasters (''NAB'') filed an action in the U.S. District Court for the Southern District of New York on behalf of its members, asking for a declaratory judgment that nonsubscription simultaneous transmissions of radio broadcasts via the Internet by FCC-licensed broadcasters are exempt from the limited sound recording performance right. *See National Ass'n of Broadcasters* v. *Recording Indus. Ass'n of Am.*, No. 00 Civ. 2330 (S.D.N.Y., filed March 27, 2000). The NAB then moved to suspend the rulemaking proceeding, Docket No. RM 2000–3, until the Court had ruled in this case.

Before making a decision on the merits of the motion to suspend, the Office published a second notice in which it requested comments on whether to grant the motion to suspend the rulemaking proceeding and await the decision of the U.S. District Court for the Southern District of New York. 65 FR 17840 (April 5, 2000).

For the reasons set forth herein, the Copyright Office is denying the NAB's motion to suspend this rulemaking and is announcing a final rule to clarify that a transmission by an FCC-licensed broadcaster of its AM or FM radio broadcast over the Internet is not exempt from the limited public performance right for digital transmissions under section 114(d)(1)(A).

The Commenters

In response to the NPRM, the Office received comments from the following commenters: BroadcastAmerica.com, Inc. (''BroadcastAmerica''); jointly, American Society of Composers, Authors and Publishers, Broadcast Music, Inc., and SESAC, Inc. (collectively, the ''Performing Rights Organizations''); Digital Media Association (''DiMA''); jointly, Balogh Broadcasting Company, Inc., Big Mack Broadcasting, Inc., Hall Communications, Inc., KSTP-AM, L.L.C., KSTP–FM, L.L.C., LBJS Broadcasting Company, L.P., Lyle Broadcasting Corporation, M&M Broadcasters, Ltd., Rice Capital Broadcasting Inc., Twin Lakes Communications, Inc., Zimmer Broadcasting Company, Inc., Zimmer Communications, Inc., Zimmer Radio of Mid-Missouri, Inc., and ZRG of Illinois, Inc. (collectively, ''Broadcasters I''); jointly, AMFM, Inc., Bonneville International Corporation, CBS Corporation, Clear Channel Communications, Inc., Cox Radio, Inc., Emmis Communications Corporation, and National Association of Broadcasters (collectively, ''Broadcasters II''); State Broadcasters Associations (''State Broadcasters''); Criswell Center For Biblical Studies (''Criswell''); and jointly, The Recording Industry Association of America, Inc., Association for Independent Music, American Federation of Musicians, and American Federation of Television and Radio Artists (collectively, ''Copyright Owners''), including a separate memorandum, Copyright Liability of Broadcasters for Webcasting Their AM/FM Radio Signals, prepared by Robert Gorman (''Gorman'').

Reply comments were filed by Entercom Communications Corp., and five of the eight commenters: the Copyright Owners; Broadcasters I; DiMA; State Broadcasters; and Broadcasters II.

The Copyright Office's Authority To Conduct This Rulemaking

a. Authority to act. The Copyright Office stated in the NPRM that it initiated this proceeding under the rulemaking authority granted by 17 U.S.C. 702, to ''interpret the statute in accordance with Congress'' intentions and framework and, where Congress is silent, to provide reasonable and permissible interpretations of the statute.'' 65 FR 14227, citing 57 FR 3284, 3292 (January 29, 1992). Our authority to act is supported by *Satellite Broadcasting and Communications Ass'n of Am.* v. *Oman*, 17 F.3d 344 (11th Cir. 1994) (''SBCA''), and *Cablevision Sys. Dev. Co.* v. *Motion Picture Ass'n of Am., Inc.*, 836 F.2d 599 (D.C. Cir.), *cert. denied*, 487 U.S. 1235 (1988) (''Cablevision''), where the Eleventh Circuit and the D.C. Circuit expressly acknowledged the Office's authority to provide reasonable interpretations of the cable statutory license. *See*, *SBCA*, 17 F.3d at 347 (''The Copyright Office is a federal agency with authority to promulgate rules concerning the meaning and application of section 111''); *Cablevision*, 836 F.2d at 608–09(same). *See also, DeSylva* v. *Ballentine*, 351 U.S. 570, 577–78 (1956)(recognizing that Copyright Office's interpretation of the Copyright Act should ordinarily receive deference).

Most of the commenters do not challenge the Office's rulemaking authority in this proceeding. However, the Broadcasters suggest that the Office may be without authority to interpret the extent of the section 114(d)(1)(A) exemption. They argue that the interpretation of section 114(d)(1)(A) sought by RIAA in this proceeding—whether copyright liability does or does not attach to transmissions of radio stations over the Internet—is very different from previous rulemaking proceedings of the Office interpreting provisions of other compulsory licenses.

Specifically, the Broadcasters submit that *SBCA* and *Cablevision* are poor precedent for supporting rulemaking authority in this case. In *SBCA*, the Office determined that satellite carriers were not eligible for the cable compulsory license for their retransmission of over-the-air broadcast signals, thereby subjecting these retransmissions to copyright owners' exclusive rights. In *Cablevision*, the Office interpreted the meaning of the term ''gross receipts'' as it appeared in the section 111 cable compulsory license. According to the Broadcasters, the copyright liability of satellite carriers and cable systems was already established, and the Office was merely sorting out the terms of a compulsory license. In this proceeding, however, the Office is being called upon to decide whether any copyright liability exists at all for broadcasters who stream their radio signals over the Internet. If, according to the Broadcasters, there is no copyright liability for such activity because it is exempted by section 114(d)(1)(A), then the Copyright Office has no jurisdiction over that activity because it does not implicate the copyright laws. The Broadcasters conclude that the Copyright Office does not have any authority to address the status of broadcaster transmissions of radio signals over the Internet until such time as a federal court decides the issue.

If the Broadcasters' position is accepted, the Copyright Office's ability to administer section 114 of the Copyright Act will be frustrated. Section 114 treats the public performance of sound recordings by digital audio transmissions in one of three ways: the performance is either exempt from copyright liability, subject to copyright

owners' exclusive rights, or subject to statutory licensing. The Library of Congress and the Copyright Office are charged with conducting a copyright arbitration royalty panel (''CARP'') proceeding to set the rates and terms of the statutory license, and the Library has already begun the CARP process (and stayed its initiation pending the resolution of this rulemaking proceeding). Many broadcasters, and the NAB, have stayed out of the proceeding on the grounds that they qualify for the section 114(d)(1)(A) exemption. If these parties are not covered by the exemption (as the Office is determining today), they should be afforded the opportunity to participate in the CARP proceeding.[1] CARP proceedings are adversarial in nature, making it critical that the interests of all affected copyright owners and users are represented in the proceeding so that the CARP has a full and complete evidentiary record on which to render its determination. Without such information, the CARP cannot render a complete and accurate decision, thereby compromising the efficiency of the section 114 license.

Under the Broadcasters' approach, copyright users of sound recordings can effectively impede a CARP proceeding by claiming that their activities are not implicated by the proceeding until a federal court determines that they are. The Copyright Office would then be forced either to go forward with the CARP proceeding with an incomplete record, or to postpone the proceeding until after a ruling has been obtained from a federal court. If no ruling is obtained through private litigation, or conflicting decisions are handed down by the federal courts, the Library may not be able to have a CARP at all. The Copyright Office concludes that Congress intended no such result.

Broadcasters distinguish the *SBCA* case by observing that the issue therein was whether a satellite carrier was a ''cable system'' for purposes of Section 111 compulsory licensing. In contrast, according to Broadcasters, the issue here is whether their ''particular conduct falls under the purview of the Copyright Act.'' Broadcasters II Reply, at 9–11. They argue that because the activities of the satellite carriers in SBCA related to ''particular conduct admittedly implicating copyright liability,'' the Office had the power to determine whether that conduct was within the scope of the cable compulsory license. But they contend that where the activity is exempt under a specific statutory provision, the conduct may not be considered further by the Office under its authority to promulgate regulations to administer a compulsory license, the scope of which, but for the exemption, would otherwise include such activity.

The Office finds this distinction artificial and unpersuasive. Here, as in SBCA, the issue is whether a particular type of activity falls within the scope of a statutory compulsory license. The fact that Broadcasters claim to be exempt from the performance right for sound recordings does not deprive the Office of the ability to determine whether they are subject to the section 114 compulsory license. In order to determine whether broadcasters transmitting performances of their broadcast signals over the Internet are subject to the compulsory license, it is necessary to address their claim that they enjoy the exemption under section 114(d)(1)(A) when they engage in that activity. If they are exempt, then the inquiry proceeds no further. If they are not exempt, then there appears to be no dispute that their activity is subject to the section 114(f) compulsory license. Broadcasters cite absolutely no authority for the proposition that an agency may not determine whether conduct falls within a particular regulatory scheme administered by the agency when a claim of exemption is made by the party whose conduct is in question.[2]

In sum, the Copyright Office concludes that it does possess the authority to conduct this rulemaking, based on our responsibility to conduct a CARP proceeding to establish rates and terms for the section 114 license, as provided in section 114 itself and chapter 8 of the Copyright Act, and the Office's general rulemaking authority granted by section 702 of the Act.

b. Advisability of acting. Most of the comments address the advisability of the Copyright Office's undertaking of this rulemaking proceeding. Not surprisingly, those commenters representing broadcasters favor postponement or cancellation of this proceeding, pending the outcome of the NAB action in the Southern District of New York. For the reasons described below, the Office believes that it is appropriate to exercise its authority and resolve this rulemaking proceeding now.

First, the Copyright Office disagrees with the assertion that a federal court is better suited at this point to determine whether broadcaster transmissions over the Internet are exempted by section 114(d)(1)(A) of the Copyright Act. We do not question the competence or expertise of the United States District Court for the Southern District of New York to interpret the copyright laws, and ultimately this issue may be resolved by the courts following the Office's ruling. But in the first instance, where the law is complex and requires clarification, the general policy is to allow the agency to complete its action, particularly ''where the function of the agency and the particular decision sought to be reviewed involve exercise of discretionary powers granted the agency by Congress, or require application of special expertise.'' *Miss America Organization* v. *Mattel, Inc.*, 945 F.2d 536, 540 (2nd Cir. 1991), citing *McKart* v. *United States*, 395 U.S. 185 (1969); *see also*, *Cablevision*, 836 F.2d at 608 (''The Copyright Office certainly has greater expertise in such matters than do the federal courts.'')

Moreover, the Office has a long and extensive history of administering and interpreting the Copyright Act, especially the statutory licensing provisions of the Copyright Act. *See*, *e.g.*, 49 FR 13029 (April 2, 1984)(definition of gross receipts under section 111 license); 57 FR 3284 (January 29, 1992)(definition of a cable system under section 111 license); 62 FR 18705 (April 17, 1997)(establishing filing regulations for SMATV systems under section 111). The Office also produced for Congress two studies on the advisability of adopting a performance right for sound recordings. Copyright Implications of Digital Audio Transmission Services: A Report of the Register of Copyrights (1991); Subcomm. on Courts, Civil Liberties, and the Administration of Justice of the Committee on the Judiciary House of Representatives, 95th Cong., Performance Right in Sound Recordings (Comm. Print 1978). And the Register of Copyrights testified before both the Senate and House of Representatives on the legislation that amended sections 106 and 114. *See* Digital Performance Right in Sound Recordings Act of 1995: Hearings on S. 227 Before the Senate Comm. On the Judiciary, 104th Cong., (March 9, 1995); Digital Performance Right in Sound Recordings Act of 1995: Hearings on H.R. 1506 Before the Subcomm. On Courts and Intellectual

[1] Any broadcaster who wishes to participate and has not yet filed a notice of intention to do so in the pending proceeding should file such notice in accordance with the requirements set forth in a separate **Federal Register** notice addressing this issue.

[2] We note as well that the Broadcasters' distinction does not dispositively adjudicate the substantive rights of copyright users. In both situations, a party aggrieved by a decision of the Office can seek judicial review. Satellite carriers disagreed with the Office's negative determination of their eligibility for the section 111 license and brought the *SBCA* litigation. If broadcasters do not agree with the Office's determination in this proceeding, they likewise can seek judicial review.

Property of the House Comm. On the Judiciary, 104th Cong. (June 28, 1995). Thus, we believe we are well-suited to interpret section 114, including the extent of the section 114(d)(1)(A) exemption.

Second, not only have the commenters to the NPRM not cited any authority that the Copyright Office must defer to a federal court action, but they have not cited any cases where a government agency has deferred action to a federal court a matter before the agency. *Goya Foods, Inc.* v. *Tropicana Prods, Inc.,* 846 F.2d 848 (2d Cir. 1988), and *Nader* v. *Allegheny Airlines, Inc.,* 426 U.S. 290 (1976) are cited by the Broadcasters for the proposition that the matter of the section 114(d)(1)(A) exemption ''lies within the traditional realm of judicial competence.'' *Goya,* 846 F.2d at 851. Neither of these cases, however, involved a government agency deferring judgment to a federal court on a matter clearly within the agency's jurisdiction. In fact, both cases involved just the opposite; a court's decision not to stay a judicial proceeding pending the resolution of an agency proceeding. There is not, therefore, any legal authority that compels or counsels the Office to stay this proceeding in deference to the court in New York.

Third, there is a need to resolve the status of broadcast transmissions over the Internet for purposes of the CARP proceeding to establish rates and terms for the section 114 statutory license as quickly as possible. As discussed above, the success of a CARP proceeding depends upon a full and complete record. This means that all parties who are potentially subject to the section 114 license must be identified and given the opportunity to participate in the CARP proceeding. The NAB/RIAA litigation in the Southern District of New York may not be resolved for several years,[3] which leaves the Copyright Office two undesirable choices: postpone the CARP until that litigation is resolved, or proceed with what we believe would be an insufficient record and receive an incomplete decision from the CARP. Neither of these choices is acceptable; therefore, the Office is now deciding whether the simultaneous transmission of an over-the-air radio broadcast transmission made by an FCC-licensed broadcaster over the Internet is exempt from the digital performance right.

Fourth, NAB has sought a declaratory judgment from the New York district court and is not currently being sued for copyright infringement. There is considerable question whether NAB has presented the district court with a live case and controversy, and the RIAA has sought dismissal of the case on jurisdictional grounds. If the suit is dismissed, there will be no opportunity for a court to interpret the meaning of the section 114(d)(1)(A) exemption, at least until such time as a copyright infringement action is brought against a broadcaster for transmitting over-the-air radio broadcasts on the Internet. The Office needs to act now to move the CARP proceeding forward.

Finally, even if the New York district court rules, and the case is appealed through the Second Circuit, that is still not the final word from the federal court system. Other suits may be brought in other federal circuits, creating the potential for conflicting determinations. Thus, we believe it makes far greater sense for the Copyright Office to address the status of broadcast transmissions over the Internet and the section 114(d)(1)(A) exemption, given that it is the expert agency entrusted with the authority to interpret the meaning of the provisions of the Copyright Act.

Scope of the Section 114(d)(1)(A) Exemption

In 1995, Congress enacted the Digital Performance Right in Sound Recordings Act (''DPRA''), Public Law 104–39, which created an exclusive right for copyright owners of sound recordings, subject to certain limitations, to perform sound recordings publicly by means of certain digital audio transmissions. Among the limitations on the performance right was the creation of a new compulsory license for nonexempt, noninteractive, digital subscription transmissions, 17 U.S.C. 114(f), and an exemption for certain nonsubscription transmissions. 17 U.S.C. 114 (d)(1)(A)(i)–(iii) (1995).

Congress passed the DPRA in response to the growth in the use of digital technology to provide recordings with superior sound quality (e.g., digital phonorecord deliveries) and the growth of digital transmission services that could offer a consumer a digital transmission of a particular sound recording on demand. Congress realized that these advancements offered new and better ways to distribute music to the consumer, but at the same time, it recognized that the current law was inadequate to protect the interests of the copyright owners whose livelihoods depend upon the revenues generated from the sales of their works. Thus, Congress created a limited performance right in sound recordings. S. Rep. No. 104–128, at 14 (1995) (hereinafter ''1995 Senate Report'').

In drafting the DPRA, Congress tried to balance the interests of the music industry,[4] traditional users of sound recordings,[5] and those who wished to utilize the new technologies to make transmissions of sound recordings. The expressed intent of Congress in passing the Act was ''to provide copyright holders of sound recordings with the ability to control the distribution of their product by digital transmissions, without hampering the arrival of new technologies, and without imposing new and unreasonable burdens on radio and television broadcasters, which often promote, and appear to pose no threat to, the distribution of sound recordings.'' 1995 Senate Report at 15. This change, however, was not meant to alter or upset in any way the longstanding relationship between the record industry and broadcasters. Broadcasters II at 15, citing 1995 Senate Report, at 9; *accord* H.R. Rep. No. 104–274, at 6 (1995) (hereinafter ''1995 House Report'').

To strike the proper balance between these parties, Congress created three exemptions for nonsubscription transmissions, including an express exemption for a nonsubscription broadcast transmission. 17 U.S.C. 114(d)(1)(A)(i)–(iii)(1995). It is the scope of this exemption, which has been debated since the passage of the DPRA, *see* Reply Comments of the National Association of Broadcasters at 9–12 (dated June 20, 1997), submitted in Docket No. RM 97–1, that is the subject of this proceeding.

Broadcasters take a broad view of the exemption. Their position is that any transmission made by an FCC-licensed broadcaster, whether made over-the-air or over the Internet, falls within the scope of the section 114(d)(1)(A) exemption. Not surprisingly, Copyright Owners and DiMA take a different view and interpret the scope of the exemption more narrowly. Their position is that a

[3] At the time this **Federal Register** notice was prepared, RIAA's motion to dismiss NAB's claims was still pending in the court, and no further motions have been filed. It seems highly unlikely that the court will resolve the merits of the declaratory relief action in the near future.

[4] ''[T]he legislation is a narrowly crafted response to one of the concerns expressed by representatives of the music community, namely that certain types of subscription and interactive audio services might adversely affect sales of sound recordings and erode copyright owners' ability to control and be paid for the use of their work.'' 1995 Senate Report at 15.

[5] Prior to the passage of the DPRA, FCC-licensed broadcasters, cable systems and satellite systems all transmitted or retransmitted sound recordings in their programming without incurring any copyright liability for the public performance of a sound recording. Congress, in acknowledging the promotional value to the record companies that flows to them through advertiser-supported, free over-the-air broadcasting, included specific exemptions in the law from the digital performance right for these users. *See* 17 U.S.C. 114(d)(1)(A), (B) and (C).

transmission of a radio signal over the Internet, generally referred to as a webcast, is subject to the copyright owner's public performance right, even when the transmission is made by an FCC-licensed broadcaster and is identical to an over-the-air transmission. *See* 17 U.S.C. 106(6). They further argue that Congress could not possibly have meant to exempt anything other than over-the-air broadcasts in the DPRA, because Congress had not even yet considered transmissions of sound recordings over the Internet and how they fit into the statutory scheme. This is a critical point, because the scope of the exemption did not change when Congress amended section 114 in 1998 with the passage of the DMCA.

To resolve this question, we examine the legislative history of the DPRA and the DMCA to discern what Congress intended to do and when it intended to do it. From this examination, it is clear that in 1995, Congress' focus was not on Internet transmissions of sound recordings, but rather on the emerging interactive services, *e.g.,* the pay-per-listen, audio-on-demand, or ''dial-up'' services for a particular recording or artist, and the existing noninteractive subscription services that offered nearly continuous play of music through cable and satellite services. *See* 1995 Senate Report at 22.

Consideration of Internet services came later once it became clear that the DPRA did not adequately address their operations. The House Manager's Report for the DMCA makes this point clearly:

> At the time the DPRSRA [Digital Performance Right in Sound Recordings Act] was crafted, Internet transmissions of music were not the focus of Congress' effort. Thus, while the DPRSRA created a statutory license for certain subscription services that existed at the time, not enough was known about how nonsubscription music services would evolve on the Internet or in other digital media. However, given the proliferation and evolution of such services as well as the licensing complexities described above, it is now appropriate to address the licensing of nonexempt nonsubscription digital audio transmissions.

Staff of the House of Representatives Comm. on the Judiciary, 105th Cong., 2d Sess., Section-by-Section Analysis of H.R. 2281 as Passed by the United States House of Representatives on August 4, 1998 at 51 (Comm. Print, Serial No. 6, 1998) (hereinafter ''House Manager's Report'').

It was during the DMCA debate in 1998 that Congress focused on the need to clarify how the law applied to the transmission of a sound recording by a noninteractive, nonsubscription service streaming music over the Internet. These services, now known in the industry as webcasters, had argued that they, like the broadcasters, were non-infringing users because noninteractive, nonsubscription transmissions were exempt under section 114(d)(1)(A)(i) (1995). The record industry did not agree, arguing that the transmissions were subject to the newly created digital performance right. DiMA at 4.

Congress revisited the issue and, ultimately, amended sections 114 and 112 to clarify ''that the digital sound recording performance right applies to nonsubscription digital audio services such as webcasting, addresses unique programming and other issues raised by Internet transmissions, and creates statutory licensing to ease the administrative and legal burdens of constructing efficient licensing systems.'' House Manager's Report at 50.

These changes were part of the Digital Millennium Copyright Act of 1998 (''DMCA''), Public Law 105–304, which among other things, amended section 114 by creating a new statutory license for nonexempt eligible nonsubscription transmissions (*e.g.,* webcasting) and nonexempt transmissions by preexisting satellite digital audio radio services to perform sound recordings publicly in accordance with the terms and rates of the statutory license. 17 U.S.C. 114(f)(1998). The DMCA also amended section 114(d)(1)(A) to ''delete two exemptions that were either the cause of confusion as to the application of the DPRA to certain nonsubscription services (especially webcasters) or which overlapped with other exemptions (such as the exemption in subsection (A)(iii) for nonsubscription broadcast transmissions). The deletion of these two exemptions [was] not intended to affect the exemption for nonsubscription broadcast transmissions.'' 1998 House Report at 80.

The question, however, is what constitutes a nonsubscription broadcast transmission for purposes of the DPRA, since its meaning remained unchanged when Congress amended section 114 in 1998. Both Copyright Owners and DiMA maintain that a ''nonsubscription broadcast transmission'' is nothing more than a traditional over-the-air broadcast made by an FCC-licensed broadcaster. Broadcasters disagree and argue that the definition of a ''broadcast transmission'' for purposes of the section 114 license is not so limited, but includes all transmissions of an AM or FM radio signal, even those over the Internet, if made by the FCC-licensed broadcaster.

In answering this question, Broadcasters and Copyright Owners each argue that the statutory language and licensing scheme, the legislative histories of the DPRA and the DMCA, and public policy considerations support its respective position.

Statutory Language and Legislative History

a. Statutory definitions. The DPRA established three exemptions from the digital performance right for certain nonsubscription transmissions, including an express exemption for a ''nonsubscription broadcast transmission.'' It read, in relevant part, as follows:

> (1) Exempt Transmissions and Retransmissions.—The performance of a sound recording publicly by means of a digital audio transmission, other than as a part of an interactive service, is not an infringement of section 106(6) if the performance is part of—
>
> (A)(iii) a nonsubscription broadcast transmission.
>
> 17 U.S.C. 114(d)(1)(A)(iii) (1995).

Broadcasters assert that the statutory language is clear and unambiguous on its face and that where this is so, one need not resort to the legislative history to discern the meaning of the statutory terms. Broadcasters I at 7; Broadcasters II at 18. Broadcasters II also rely on the well-established proposition that where a term is defined by the statute, an agency and the courts are constrained to adhere to this definition when interpreting the provisions of the act, citing *Fox* v. *Standard Oil*, 294 U.S. 87, 95–96 (1935).

Using these principles, the Broadcasters analyze the statutory definitions of the relevant terms set forth in section 114(j) to determine whether a webcast of an AM/FM radio station's programming is exempt. These terms were defined in the DPRA as follows:

> A ''broadcast'' transmission is a transmission made by a terrestrial broadcast station licensed as such by the Federal Communications Commission.
>
> 17 U.S.C. 114(j)(2) (1995).
>
> A ''digital audio transmission'' is a digital transmission as defined in section 101, that embodies the transmission of a sound recording. This term does not include the transmission of any audiovisual work.
>
> 17 U.S.C. 114(j)(3)((1995).
>
> A ''nonsubscription'' transmission is any transmission that is not a subscription transmission.
>
> 17 U.S.C. 114(j)(5) (1995)
>
> A ''transmission'' includes both an initial transmission and a retransmission.
>
> 17 U.S.C. 114(j)(9) (1995).[6]

[6] The definition ''transmission'' was amended in the DMCA. It now reads: ''A 'transmission' is either an initial transmission or a retransmission.'' 17 U.S.C. 114(j)(15) (1998).

All commenters agree that the statutory definitions for a ''transmission,'' a ''digital audio transmission,'' and a ''nonsubscription transmission'' are clear and that the transmissions in dispute qualify as nonsubscription, non-interactive, digital audio transmissions for purposes of the DPRA. *See* Broadcasters II at 20; Gorman at 28 n.89. The dispute lies with the definition of a ''broadcast transmission.'' Broadcasters argue that the pivotal element in the definition is the designation of the nature of the entity making the transmission—not the method of the transmission. In other words, the fact that an FCC-licensed broadcast station makes the transmission is dispositive. Thus, Broadcasters reason that any transmission made by a terrestrial broadcast station licensed by the FCC, whether disseminated over-the-air or transmitted over the Internet, fits the statutory definition of a ''nonsubscription broadcast transmission'' and therefore, is expressly exempt under the section 114(d)(1)(A)(iii) (1995) exemption and remains exempt under the current section 114(d)(1)(A) (1998) provision. Broadcasters I Reply at 6; Broadcasters II Reply at 17. Furthermore, they contend that transmissions made by FCC-licensed broadcasters ''do, in fact, comply with FCC content requirements to promote the public interest and serve the local community.'' Broadcasters II Reply at 17.

In creating a safe harbor for radio broadcasts, Congress identified key factors that ''place[d] such programming beyond the concerns that animated the creation of the limited public performance right in sound recordings in Section 106(6). Specifically, radio programs that (1) are available without subscription; (2) do not rely upon interactive delivery; (3) provide a mix of entertainment and non-entertainment programming and other public interest activities to local communities to fulfill FCC licensing conditions; (4) promote, rather than replace, record sales; and (5) do not constitute ''multichannel offerings of various music formats.'''' Broadcasters II at 26–27 (footnote omitted), citing 1995 Senate Report at 15. Broadcasters argue that these characteristics apply equally to the transmission of a local radio broadcast signal whether transmitted over-the-air or streamed via the Internet; and consequently, all transmissions of radio broadcasts should be exempt without regard to the method of transmission. Copyright Owners and DiMA disagree with the Broadcasters' approach. They argue that the exemption for a ''nonsubscription broadcast transmission'' was adopted in order to shelter broadcasters from the new digital performance right, if and when they converted their over-the-air signals from an analog to a digital format. Gorman at 9; DiMA at 3. In direct opposition to the Broadcasters' approach, Copyright Owners focus on how the word ''terrestrial'' and the phrase ''licensed as such by the FCC'' are used in the definition of a ''broadcast station.'' *See also*, DiMA Reply at 2.

They contend that use of the word ''terrestrial'' limits the exemption to over-the-air transmissions made by a broadcast station and, thus, by implication, excludes from the exemption any nationwide transmissions by radio stations that broadcast via satellite. Gorman at 29. They point out numerous citations in the legislative history which make it abundantly clear that Congress meant to protect traditional over-the-air broadcast transmissions. For example,

> The sale of many sound recordings and the careers of many performers have benefitted considerably from airplay and other promotional activities provided by both noncommercial and advertiser-supported, free over-the-air broadcasting. * * * H.R. 1506 does not change or jeopardize the mutually beneficial economic relationship between the recording and traditional broadcasting industries.

1995 House Report, at 13 (emphasis added).

> [F]ree over-the-air broadcasts are available without subscription, do not rely on interactive delivery, and provide a mix of entertainment and non-entertainment programming and other public interest activities to local communities to fulfill a condition of the broadcasters' license. The Committee has considered these factors in concluding not to include free over-the-air broadcast services in the legislation.

Id. (emphasis added).

> The classic example of such an exempt transmission is a transmission to the general public by a free over-the-air broadcast station, such as a traditional radio or television station, and the Committee intends that such transmissions be exempt regardless of whether they are in a digital or nondigital format, in whole or in part.

1995 Senate Report at 19 (emphasis added).

They also argue that use of the phrase ''licensed as such by the FCC'' ''reflects Congressional intent to limit the scope of the exemption to those activities for which a broadcast station needs an FCC license.'' Gorman at 29 (footnote omitted). The focus here is on the nature of the transmission and not the characterization of the entity making the transmission. From this perspective, the only transmissions which are exempt under section 114(d)(1)(A) are those made by an FCC-licensed broadcaster under the terms of its license. In general, such transmissions are over-the-air transmissions made within the broadcaster's local service area. Webcasts of AM/FM radio signals are not so limited and, therefore, do not fit the statutory definition of a ''broadcast'' transmission for purposes of the DPRA. *Id.* at 29–30; *see also* DiMA Reply at 2.

Copyright Owners acknowledge that their interpretation of the exemption is narrower than the Broadcasters' but argue that the exemption for ''broadcast transmissions'' must be construed in this manner because the statute provides a complete exemption from the digital performance right in sound recordings. In making this argument, they rely upon the general rule of statutory construction that exemptions must be construed narrowly, ''and any doubt must be resolved against the one asserting the exemption,'' in order to preserve the purpose of the provision. *Tasini* v. *New York Times Co.*, 206 F.3d 161, 168 (2nd Cir. 2000). Specifically, they argue that a narrow interpretation of the exemption is particularly warranted in this context ''where denying the exemption would still leave AM/FM Webcasts eligible for a statutory license (rather than subjecting them to full copyright liability).'' Gorman at 19.

Broadcasters dispute Copyright Owners' contention that it is appropriate to read the exemption for broadcast transmission so narrowly. They claim that Copyright Owners ignore Congress' intent to construe the digital performance right narrowly and limit the right only to certain digital transmissions of sound recordings. Broadcasters II Reply at 24–25. Broadcasters argue further that it is inconceivable that after refusing for decades to grant copyright owners of sound recordings a sound recording performance right, Congress ''intended to sweep within a newly-created and narrowly-circumscribed performance right broadcaster transmissions over the Internet of their broadcast programming.'' Broadcasters II Reply at 21 (emphasis omitted).

Historically, the Copyright Office construes limitations on copyright narrowly, especially those rights constrained by a compulsory license. *See* 49 FR 14944, 14950 (April 16, 1984) and 57 FR 3284, 3293 (January 29, 1992). This tenet is fully consistent with the rules of statutory construction which require ''[s]tatutes granting exemptions from their general operation [to] be strictly construed, and any doubt must be resolved against the one asserting the exemption.'' *See* 73 Am. Jur. 2d 313 (1991); *Tasini*, *supra*.

Broadcasters argue that this precept favors their interpretation, asserting that the newly created digital performance right was narrowly crafted and not meant to disturb the traditional broadcasting system in place at the time the DPRA was passed. But once created, the right is to be defined by reference to the statute, and there is no reason to depart from the general rule that the exemption to the right must be narrowly construed. The key to determining the scope of the exemption is an understanding of the meaning of the term ''broadcast transmission.''

As previously discussed, Broadcasters assert that the exemption from the digital performance rights applies not only to traditional over-the-air broadcast transmissions, but also to transmissions of these signals over the Internet. The Broadcasters interpret the exemption in the broadest possible manner based upon their reading of the statutory definition for a ''broadcast transmission'' which defines the transmission solely on the basis that it was made by an FCC-licensed broadcaster. They argue that the language is clear and unambiguous and so the analysis ends here.

The Copyright Office does not agree. The use of the descriptive phrase ''terrestrial broadcast station licensed as such by the Federal Communications Commission'' involves much more than the mere designation of a particular entity. In fact, as the Copyright Owners argue, Congress appears to have chosen these words not only as a convenient way in which to identify the entity entitled to make a broadcast transmission, but also as a way to circumscribe which actions the entity may legally undertake within the scope of the section 114 exemption. Even if the Broadcasters' reading of the definition is a plausible one, the Copyright Owners' more limited interpretation, seconded by DiMA, is at least equally plausible. For this reason, the Office turns to the relevant legislative history in order to understand how Congress intended the law to operate.

Turning to the legislative history is appropriate where, as here, the precise meaning is not apparent and a clear understanding of what Congress meant is crucial to an accurate determination of how Congress intended the digital performance right and the statutory scheme to operate. *See also*, 57 FR 3284, 3293 (1992). Consequently, we place great weight on the passages in the 1995 House and Senate Reports which discuss and characterize broadcast transmissions.

As noted above, Congress used the descriptive term ''over-the-air'' frequently to identify those broadcasts it sought to protect under the exemption. Such transmissions are made in accordance with the terms of the FCC license issued to the broadcaster. If Congress had discussed or referenced any other type of transmission made by an FCC-licensed broadcaster, we might be more inclined to support the Broadcasters' interpretation of the statutory definition. This is not the case, and the Office concludes that Congress used the phrase ''licensed as such'' to serve two purposes. First, it identifies the entity entitled to make a broadcast transmission under an exemption to the digital performance right; and second, it specifies which transmissions made by the broadcaster are exempt, that is, those transmissions made over-the-air by the broadcasting entity under the terms of the FCC license.

b. Additional exemptions. Copyright Owners do not limit their analysis of the statutory language to the statutory exemption under consideration. This is only their starting point. They continue their analysis of section 114 under a second well-established rule of statutory construction which requires interpretation of each provision in a section in such a way as to produce a harmonious whole. 2A Sutherland, Stat. Const.§ 46.05 (6th ed. 2000); *see also* 57 FR 3284, 3292 (1992).

Of particular interest are the exemptions for a ''retransmission of a radio station's broadcast transmission'' set forth in sections 114(d)(1)(B) and (C) (1995). Section 114(d)(1)(B) restricts retransmissions to a 150-mile radius from the site of the radio broadcast transmitter, to the local communities served by the retransmitter, and those carried by a cable system or a noncommercial educational broadcast station. Similarly, section 114(d)(1)(C) exempts certain incidental transmissions, transmissions to and within business establishments, and those retransmissions made to deliver licensed programming to the user.

Copyright Owners argue that these provisions merely reflect congressional intent to grandfather existing retransmission services at the time of the passage of the DPRA. Gorman at 10; DiMA Reply at 2–3; *see also*, 1995 Senate Report at 22 (noting that a retransmission over the Internet which is being used to facilitate an exempt transmission or retransmission, would not qualify as an ''incidental'' retransmission under section 114(d)(1)(C)(1)).

Similarly, DiMA argues that Congress never intended to exempt broadcast retransmissions via the Internet; otherwise it would have enlarged these exemptions when it passed the DMCA, which it chose not to do. *See* DiMA at 5. In addition, DiMA argues that Congress would not have limited the exemption for a ''retransmission'' of a ''broadcast transmission'' by differentiating between radio transmissions made by terrestrial and non-terrestrial broadcast technologies, if it was content with exempting any transmission made by an FCC-licensed broadcaster. DiMA Reply at 2. Copyright Owners concur with DiMA on this point. In addition, they argue that the definition of an ''eligible nonsubscription transmission'' supports this interpretation because it includes retransmissions of broadcast signals. Had Congress meant to exempt any and all transmissions of a broadcast signal, it would not have included this wording in the definition of an ''eligible nonsubscription transmission,'' the newly created class of transmissions subject to the statutory license. DiMA Reply at 3.

Broadcasters counter the Copyright Owners' interpretation in regard to these exemptions, noting an exception to the 150-mile limitation for nonsubscription retransmissions by ''a terrestrial broadcast station.'' They also suggest that the limitations on retransmissions were directed only to those made by third parties, and not to a simultaneous transmission made directly by the FCC-licensed broadcaster. Broadcasters II Reply at 25. In addition, Broadcasters stress that a transmission of a radio program, even via the Internet, serves the needs and interests of the local community as required under the FCC license. For these reasons, Broadcasters argue that Congress created a specific exemption for certain retransmissions of nonsubscription radio broadcast transmissions, including those that are transmitted ''by a terrestrial broadcast station, terrestrial translator, or terrestrial repeater licensed by the Federal Communications Commission.''

While it is clear that a broadcast transmission is exempt, it is equally clear that a retransmission of a radio signal (though technically a transmission)[7] is exempt only under certain circumstances. This fact alone undermines the Broadcasters' assertion that any transmission made by an FCC-licensed broadcaster is immediately and totally exempt. In addition, their

[7] A ''transmission'' is either an initial transmission or a retransmission. 17 U.S.C. 114(j)(15).

specific arguments on this point do not withstand scrutiny.

First, the exception to the 150-mile limitation is only for retransmissions made by ''a terrestrial broadcast station, terrestrial translator, or terrestrial repeater licensed by the Federal Communications Commission.'' 17 U.S.C. 114(d)(1)(B)(i)(I). Again, the fact that the entity making the retransmission must be licensed by the FCC sets limits on how far each retransmission can reach. In no case, however, could these retransmissions parallel the reach of the Internet or a retransmission made by a satellite. Second, the suggestion that the retransmissions discussed in section 114(d)(1)(B) refer only to those made by third parties and not to simultaneous retransmissions made by the originating broadcaster is groundless. There is no such distinction set forth in the statute. And finally, we see no significance to the fact that the retransmission of a radio signal may meet the license requirements for service to a local community, when in fact such a transmission exceeds the geographical limits established for the broadcast under the FCC license.

c. Expansion of the statutory license. Copyright Owners and DiMA contend that the original licensing scheme was conceived without any significant thought to the transmission of sound recordings by means other than the conventional over-the-air transmissions in use at the time. Copyright Owners at 12–13; DiMA at 4; *See also* House Manager's Report at 51. This became an obvious problem with the growth of the Internet and the rapid increase in the use of the new streaming technology to transmit sound recordings over the Internet.[8]

Copyright Owners contend that, in order to address this problem, Congress made a significant change to section 114 when it passed the DMCA. For example, it amended section 114(d)(2) to extend the statutory license to ''eligible nonsubscription transmissions'' and defined the term to include retransmissions of broadcast transmissions. 17 U.S.C. 114(j)(6). Copyright Owners argue that these changes support its position that the statutory scheme militates against exempting transmissions of AM/FM radio signals over the Internet.

First, they note that when Congress expanded the statutory license, it specifically considered the needs of the emerging services that wanted to stream sound recordings over the Internet. *See* 1998 House Report at 80, 82 and 84. They then claim that Congress never ''intended to single out any class of webcasters for special treatment, or for some webcasters to be exempt and others to be liable.'' Gorman at 24. Instead, they argue that Congress amended the DPRA to make all webcasters, including those who are also FCC-licensed broadcasters, eligible for the statutory license.

In addition, they note that in the case where the transmitting entity does not have the right or ability to control the programming of the broadcast station, special terms apply. Congress made these transmissions subject to the compulsory license but chose not to make these transmissions immediately subject to certain restrictions otherwise applicable to a nonexempt, nonsubscription transmission, except in the case where the broadcast station regularly violates the restriction and the copyright owners give notice to the service making the retransmission. *See* 17 U.S.C. 114(d)(2)(C)(i)–(iii), (ix).

Copyright Owners argue that ''[t]his language implies that where the transmitter can control the content of the signal, [it] must meet the conditions of the statutory license. Because the content of AM/FM signals can be controlled by the broadcaster, this suggests that Congress intended broadcast transmissions to be subject to the statutory license.'' Gorman at 25–26 (footnotes omitted). Otherwise, as DiMA points out, ''why would Congress have imposed licensing and 'notice and takedown' requirements on third parties that retransmit radio broadcasts, if the broadcaster itself could transmit the same programming over the Internet without a license and without restriction?'' DiMA Reply at 4 (footnote omitted).

The Copyright Office believes that the narrowly drawn safe harbors for retransmissions of radio signals illustrate Congressional intent to distinguish between a traditional over-the-air broadcast transmission of an AM/FM radio signal and a retransmission of that signal. Even though the statutory definition of a transmission includes both an initial transmission and a retransmission, Congress clearly chose to treat retransmissions of a radio signal differently. ''Retransmissions of radio station broadcast transmissions * * * are exempt only if they are not part of an interactive service and fall within certain specified categories.'' 1995 Senate Report at 19 (emphasis added). These restrictions limit the reach of a retransmission of an AM/FM radio signal and neither suggest nor allow for retransmission of an AM/FM radio signal to a national audience. Had Congress meant to exempt without limitation a further broadcast of a radio station's signal beyond the limits prescribed by its FCC license, it would not have restricted its retransmissions beyond the 150-mile limit to only those entities who make such transmissions under the terms of an FCC license, or limited subsequent retransmissions to the reach of a terrestrial broadcast station, terrestrial translator, or terrestrial repeater. 17 U.S.C. 114(d)(B)(i).

d. Ephemeral recordings. The DMCA amended section 112 to adjust for changes Congress made to section 114. Copyright Owners argue that Congress amended section 112(a) to make clear that a broadcast radio or televison station, licensed as such by the FCC, may make a single ephemeral copy of a sound recording in furtherance of its transmissions within its local service area even when those transmissions are made in a digital format. For purposes of section 112(a)(1), the term ''local service area'' is used as defined in section 111(f) of the Copyright Act. *See,* H.R. Rep. No. 94–1476, at 103 (1976). This provision limits the geographic reach of the signal and makes clear that it is not subject to worldwide distribution. In addition, Congress created a second statutory license in order to give those entities eligible for a section 114 statutory license and those exempt under section 114(d)(1)(C)(iv)[9] the right to make one or more ephemeral recordings to facilitate their transmissions under the section 112 statutory license. *See* 17 U.S.C. 112(e).

Under the Copyright Owners' construction of the section 112 amendments, a broadcaster would be unable to make ephemeral recordings under the exemption set forth in section 112(a)(1) for the purpose of streaming its radio signal because the transmission could not be limited to the station's ''local service area.'' Likewise,

[8] In fact, streaming was a novel and little recognized—much less used—technology in 1995. According to one radio analyst cited by DiMA, the number of worldwide radio broadcasts over the Internet has grown from a meager 56 stations in 1995 to more than 3500 today. DiMA Rely at 4 n.10.

[9] Section 114(d)(1)(C)(iv) provides that:

The performance of a sound recording publicly by means of a digital audio transmission, other than as a part of an interactive service, is not an infringement of section 106(6) if the performance is part of—

(C) a transmission that comes within [] the following categor[y]—

(iv) a transmission to a business establishment for use in the ordinary course of its business: Provided, That the business recipient does not retransmit the transmission outside of its premises or the immediately surrounding vicinity, and that the transmission does not exceed the sound recording complement. 17 U.S.C. 114(d)(1)(C)(iv).

broadcasters would be ineligible for the section 112(e) statutory license if AM/FM radio transmissions are exempt, since only a transmitting organization entitled to make transmissions under the section 114 license or the section 114(d)(1)(C)(iv) business exemption can make ephemeral recordings under the statutory license. Because Congress' intent was not to prevent broadcasters from making ephemeral recordings, Copyright Owners believe the only plausible construction of the statute requires the exemption for a ''nonsubscription broadcast transmission'' to exclude AM/FM webcasts. Gorman at 27.

Broadcasters offer a different interpretation of the effect of the new amendments. They contend they are eligible to make an ephemeral recording under section 112(a) because the ''local service area'' for a transmission over the Internet is global in scope. Broadcasters II Reply at 26. DiMA agrees with the Broadcasters on this point, citing the Conference Report to the DMCA:

> The addition to section 112(a) of a reference to section 114(f) is intended to make clear that subscription music services, webcasters, satellite digital audio radio services and others with statutory licenses for the performance of sound recordings under section 114(f) are entitled to the benefits of section 112(a) with respect to the sound recordings they transmit.

1998 House Report at 79. DiMA notes that each of the listed services has a ''local service area'' that extends beyond the traditional local community served by a terrestrial radio station and is either ''inherently national or global in scope.'' DiMA at 7.

Fortunately, the Copyright Office need not reach the question concerning the scope of the ''local service area'' for an Internet-originated program to resolve the question as it affects this proceeding, since it is the ''local service area'' of the FCC-licensed broadcaster that is relevant. The change to section 112(a) was made ''to extend explicitly to broadcasters the same privilege they already enjoy with respect to analog broadcasts.'' 1998 House Report at 78. The ''local service area'' of a broadcaster is defined by the terms of the FCC license under which it operates. The fact that an FCC-licensed broadcaster may choose to transmit its signal simultaneously over the Internet does not, by virtue of this action, enhance the ''local service area'' associated with the initial broadcast of the radio signal. To do otherwise would mean that the broadcasting area for a particular radio signal as defined by the terms of an FCC license would be totally meaningless, since the simultaneous transmission of a radio signal over the Internet makes the transmission instantly available anywhere in the world.

Consequently, we agree with the Copyright Owners that section 112(a) provides an exemption for making an ephemeral recording to a broadcaster who is transmitting its signal over-the-air in a digital format. It does not allow for the making of an ephemeral recording for the purpose of streaming that same signal over the Internet unless the transmission is made under the statutory license set forth in section 114. This interpretation is consistent with our analysis of the exemption for a broadcast transmission.

Policy Considerations

Industry analysts have questioned whether it would have been logical for Congress to craft a statutory licensing scheme which subjects a third party that licenses a radio station signal for streaming purposes to the statutory licensing provisions when the radio station itself could perform the same operation without any restrictions or restraints under a general exemption. *See* David J. Wittenstein & M. Larrane Ford, The Webcasting Wars, 2 J. Internet. L. 1,8 (1998); M. Powers, Broadcasters Sue Recording Industry; http://radio.about.com/entertainment/radio/library/weekly/aa/33000b.htm) (March 30, 2000).

Copyright Owners have asked the same question and conclude that it would be illogical to allow broadcasters to stream their AM/FM radio signal under an exemption but impose copyright liability on a third party when it retransmits the identical programming. Furthermore, they argue that ''[t]here is certainly nothing in the DPRA or DMCA to suggest that the right of a sound recording copyright owner to compensation should turn on whether the same transmission is made by the broadcaster or the broadcaster's agent.'' Gorman at 23; *see also* Wittenstein & Ford, *supra* at 8.

More importantly, however, DiMA argues that by allowing broadcasters to stream their programming over the Internet, broadcasters get a free pass to engage in the very activity that compelled Congress to pass the DPRA. For example, the law forbids an online service, subject to the statutory license, from playing multiple selections by the same recording artist during any three-hour period. DiMA states that should broadcasters be allowed to stream their programming over the Internet under the section 114(d)(1)(A) exemption, they could ignore the very program restrictions put into place to thwart unauthorized copying with impunity and gain market share—and a competitive advantage over non-broadcasting webcasters—by virtue of these practices. DiMA at 6; DiMA Reply at 4.

On the other hand, Broadcasters contend that it would be absurd to embrace the Webcasters and Copyright Owners' interpretation of the statute because it would mean that radio broadcasters would have to alter radically their programming practices in order to fit the requirements of the statutory license, negotiate voluntary licenses to do what they already do over-the-air, or cease streaming activities altogether. Broadcasters II at 13; Broadcasters II Reply at 28. They argue that such a harsh reading of the statute flies in the face of the stated intent of the DPRA because it would alter dramatically the longstanding relationship between the record industry and the broadcasters that Congress meant to preserve; a relationship which historically has had a beneficial and a promotional effect on the sale of records. Broadcasters I Reply at 11. Therefore, Broadcasters maintain that all streamed broadcasts of AM/FM radio signals made by an FCC-licensed broadcaster, whether over-the-air or via the Internet, fall within the safe harbor created in the section 114(d)(1)(A) exemption.

Broadcasters also assert that the acknowledged benefits that flow from the longstanding relationship between the record industry and broadcasters are not lost because a radio program is streamed over the Internet. ''If radio broadcasts are beneficial to the record industry on a local scale due to the public exposure afforded sound recordings from their airplay, that same broadcasting activity is all the more beneficial to the record industry on a national or global scale due to the even greater public exposure (leading to increased record sales) that those recordings will receive.'' Broadcasters II Reply at 32 (emphasis omitted).

DiMA disagrees. It argues that a broadcaster would receive the greater benefit if allowed to transmit its radio signal over the Internet under the section 114(a) exemption because webcasts create an additional revenue stream for a broadcaster apart from the advertising revenues that flow from the traditional over-the-air broadcast. Since all services competing in the Internet market compete for the same audience share and advertising dollars, DiMA argues that they should do business on the same basis and be subject to the same licensing requirements. Broadcasters counter this argument by focusing on the restrictions placed on

the type of advertising that broadcasters are allowed to do under their license, *e.g.,* restrictions on tobacco advertising and on promotions and contests, and the costs incurred in meeting their obligations to serve the needs of their communities. State Broadcasters Reply at 4. In fact, broadcasters argue that they will be at a competitive disadvantage if they cannot transmit sound recordings over the Internet under an exemption and, instead, are subject to potentially prohibitive license fees. *Id.* at 5.

Interestingly, Broadcasters rely on the fact that the programming on a transmission of an AM/FM radio signal over the Internet is identical to the programming transmitted on an over-the-air broadcast to support their position that these signals are, in both instances, exempt. They contend that Congress exempted broadcast transmissions because they ''comply with FCC content requirements to promote the public interest and serve the local community.'' Broadcasters II Reply at 17, 22. In addition, they argue that much of the value of the Internet transmission comes from the ability to retain listener loyalty, both those within the local community served by the over-the-air transmission and those ''who are traveling away from their home listening areas.'' Broadcasters I Reply at 3. Broadcasters also distinguish radio broadcast streams from Internet-originated programs on the basis that the radio stations generally program only a single channel, unlike the multiple channels of music programming offered by Internet-only services. Broadcasters II Reply at 27 n.14.

Yet, this distinction does not explain why a broadcaster licensed by the FCC can freely stream its radio programming over the Internet, but a third-party licensee of its content is subject to the statutory license. Both transmitting entities are providing exactly the same programming which must comply with FCC restrictions and serve the local communities. To resolve this apparent paradox, we believe that Congress defined discrete categories of transmissions (rather than transmitters), then evaluated the potential for displacement of record sales on the basis of the characteristics of those transmissions and applied the statutory restrictions and exemptions accordingly.

Using this approach, the Office has determined that the section 114(d)(1)(A) exemption does not cover transmissions of an AM/FM radio signal over the Internet. This conclusion is apparent when one considers that under the Broadcasters' entity-based interpretation, a broadcaster that created an Internet-only service indistinguishable from the services offered by non-broadcaster webcasters would be exempt from the digital public performance right, even though its transmissions are never part of an over-the-air broadcast. In fact, under the Broadcasters' interpretation, a broadcaster could cease broadcasting altogether, but continue to enjoy the exemption so long as it held the FCC license.

When Congress crafted the DPRA, it intended that the law would accommodate foreseeable technological changes and drafted the bill accordingly. At the same time, Congress understood that it could not predict how technology would develop or how it would alter the ways in which sound recordings were performed or distributed. Nevertheless, its intent was clear: ''[I]t is the Committee's intention that both the rights and the exemptions and limitations created by the bill be interpreted in order to achieve their intended purposes.'' 1995 Senate Report at 14.

The purpose for enacting the DPRA was two-fold: ''first, * * * to ensure that recording artists and recording companies will be protected as new technologies affect the ways in which their creative works are used; and second, to create fair and efficient licensing mechanisms that address the complex issues facing copyright owners and copyright users as a result of the rapid growth of digital audio services.'' House Manager's Report at 49.

The Copyright Office's determination to read the statutory definition of a ''broadcast transmission'' as including only over-the-air transmissions made by an FCC-licensed broadcaster under the terms of that license is consistent with Congress' intent in passing the DPRA. This approach preserves the traditional relationship between the record companies and the radio broadcasters as it existed in 1995. In effect, it allows for the continued transmission of an over-the-air radio broadcast signal without regard to whether the transmission is made in an analog or a digital format. Such signals, however, are limited geographically under the licensing standards of the FCC. At the same time, it subjects all other digital transmissions made by a noninteractive, nonsubscription service to the terms and conditions of the statutory license in order to compensate record companies for the increased risk that a listener may make a high-quality unauthorized reproduction of a sound recording directly from the transmission instead of purchasing a legitimate copy in the marketplace, a risk that is clearly greater when the recipient is receiving the transmission on a computer, which can instantly replicate and retransmit the transmission.

Congress' intent would be thwarted if an FCC-licensed radio broadcaster was allowed to transmit its radio signal over a digital communication network, such as the Internet, without any restrictions on the programming format. For example, as DiMA suggests, an FCC-licensed broadcaster could tailor its program to highlight a particular artist and announce its intent to do so in advance, thereby increasing the likelihood that a listener would be prepared to make a copy of the sound recording at the appointed time. Such a result would violate not only the letter of the law under our interpretation of the statute, but also the very spirit and intent of the law. For these reasons, the definition of the term ''Service'' shall be amended to reflect the determination of the Copyright Office that any entity that transmits an AM/FM radio signal over a digital communications network is subject to the terms of the statutory license set forth in 17 U.S.C. 114(d)(2).

List of Subjects in 37 CFR Part 201

Copyright.

In consideration of the foregoing, part 201 of 37 CFR is amended in the manner set forth below.

PART 201—GENERAL PROVISIONS

1. The authority citation for part 201 continues to read as follows:

Authority: 17 U.S.C. 702.

2. Section 201.35(b)(2) is revised to read as follows:

§ 201.35 Initial Notice of Digital Transmission of Sound Recordings under Statutory License.

* * * * *

(b) * * *

(2) A *Service* is an entity engaged in the digital transmission of sound recordings, pursuant to section 114(f) of title 17 of the United States Code, and includes, without limitation, any entity that transmits an AM/FM broadcast signal over a digital communications network such as the Internet, regardless of whether the transmission is made by the broadcaster that originates the AM/FM signal or by a third party, provided that such transmission meets the applicable requirements of the statutory license set forth in 17 U.S.C. 114(d)(2).

* * * * *

Dated: November 21, 2000.

Marybeth Peters,

Register of Copyrights.

James H. Billington,

The Librarian of Congress.

[FR Doc. 00–31457 Filed 12–8–00; 8:45 am]

BILLING CODE 1410–31–P

POSTAL SERVICE

39 CFR Part 20

Global Express Guaranteed: Changes in Postal Rates

AGENCY: Postal Service.

ACTION: Interim rule with request for comment.

SUMMARY: The Postal Service is changing the rates for Global Express Guaranteed (GXG) Document service and Global Express Guaranteed Non-Document service and announcing the inclusion of GXG in the current U.S. Postal Service collection pickup service.

EFFECTIVE DATE: The effective date will be concurrent with the effective date for the new domestic rates, tentatively set for January 7, 2001. Comments on the interim rule must be received on or before January 6, 2001.

ADDRESSES: Written comments should be mailed or delivered to Business Initiatives, Expedited/Package Services, U.S. Postal Service, 200 E. Mansell Court, Suite 300, Roswell, GA 30076–4850. Copies of all written comments will be available for public inspection between 9 a.m. and 4 p.m., Monday through Friday, in the Expedited/Package Services office, 200 E. Mansell Court, Suite 300, Roswell, GA.

FOR FURTHER INFORMATION CONTACT: Malcolm E. Hunt, 770–360–1104.

SUPPLEMENTARY INFORMATION: Global Express Guaranteed is the U.S. Postal Service's premium international mail service. GXG is an expedited delivery service that is the product of a business alliance between the U.S. Postal Service and DHL Worldwide Express, Inc. It provides time-definite service from designated U.S. ZIP Code areas to locations in over 200 destination countries and territories. Global Express Guaranteed consists of two mail classifications: Global Express Guaranteed Document Service and Global Express Guaranteed Non-Document Service. Regulations for Global Express Guaranteed service are currently set forth in section 215 of the International Mail Manual (IMM). These regulations were moved to IMM 210 pursuant to the notice published in the **Federal Register** on September 26, 2000. Numerous and successive expansions and changes to the service have been listed in previous **Federal Register** notices and are summarized in the final rule, which will be published in early December.

The Postal Service is changing the rates for Global Express Guaranteed service and is announcing the inclusion of this service in the current collection pickup service. The revised set of rates, set forth below, is based on experience gained with providing the service and more accurately reflects the actual costs of providing this service across the various rate groups. Additionally, the rate lanes for the Global Express Guaranteed Non-Document service are changed to an alpha character designation for clarity between the Document and Non-Document services.

Although the Postal Service is exempted by 39 U.S.C. 410(a) from the advance notice requirements of the Administrative Procedure Act regarding proposed rulemaking (5 U.S.C. 553), the Postal Service invites public comment on the interim rule at the above address.

The Postal Service is implementing the following rates and amending the International Mail Manual, which is incorporated by reference in the Code of Federal Regulations. See 39 CFR 20.1.

List of Subjects in 39 CFR Part 20

Foreign relations, International postal services.

PART 20—[AMENDED]

1. The authority citation for 39 CFR Part 20 continues to read as follows:

Authority: 5 U.S.C. 552(a); 39 U.S.C. 401, 404, 407, 408.

2. Chapter 2 of the International Mail Manual is amended as follows to provide for the new rates and to include pickup service:

2 CONDITIONS FOR MAILING

* * * * *

210 Global Express Guaranteed

* * * * *

213.2 Destination Countries and Rate Groups

[The Individual Country Listings for Global Express Guaranteed (GXG) service rates will be amended to reflect the rate changes.]

213.3 Pickup Service

Collection service pickup is available for delivery addresses within the participating Global Express Guaranteed ZIP Codes. GXG collection service will be provided when a postal employee goes to a customer's location specifically to deliver or collect mail other than Global Express Guaranteed shipments and the employee is handed a Global Express Guaranteed shipment in addition to other mail to be collected. No pickup fee will be charged when Global Express Guaranteed shipments are picked up during a delivery stop or during a scheduled stop made to collect other mail not subject to a pickup fee. On-call or scheduled pickup services are currently not available for GXG Service.

* * * * *

216.1 Document Service Rates/Groups

Weight not over (lbs.)	Rate group 1	Rate group 2	Rate group 3	Rate group 4
0.5	24.00	25.00	32.00	32.00
1	33.00	34.00	39.00	45.00
2	38.00	40.00	46.00	52.00
3	40.00	46.00	53.00	59.00
4	43.00	50.00	60.00	66.00
5	46.00	55.00	67.00	73.00
6	48.00	58.00	72.00	80.00
7	51.00	61.00	76.00	86.00
8	53.00	65.00	80.00	93.00
9	55.00	68.00	85.00	100.00
10	58.00	70.00	89.00	104.00
11	60.00	73.00	92.00	109.00

Weight not over (lbs.)	Rate group 1	Rate group 2	Rate group 3	Rate group 4
12	62.00	76.00	96.00	115.00
13	65.00	79.00	99.00	120.00
14	67.00	81.00	103.00	125.00
15	69.00	84.00	106.00	130.00
16	72.00	87.00	109.00	136.00
17	74.00	89.00	113.00	141.00
18	76.00	92.00	116.00	146.00
19	79.00	95.00	120.00	151.00
20	81.00	97.00	123.00	156.00
21	83.00	100.00	126.00	161.00
22	85.00	102.00	130.00	166.00
23	87.00	105.00	133.00	171.00
24	90.00	108.00	137.00	176.00
25	92.00	110.00	140.00	181.00
26	94.00	113.00	143.00	186.00
27	96.00	115.00	147.00	190.00
28	98.00	118.00	150.00	195.00
29	100.00	120.00	153.00	200.00
30	103.00	124.00	158.00	207.00
31	105.00	127.00	162.00	212.00
32	107.00	129.00	165.00	217.00
33	109.00	131.00	169.00	222.00
34	112.00	132.00	172.00	227.00
35	114.00	134.00	175.00	232.00
36	116.00	136.00	179.00	236.00
37	118.00	138.00	182.00	241.00
38	120.00	140.00	186.00	246.00
39	122.00	142.00	189.00	251.00
40	124.00	144.00	192.00	256.00
41	126.00	146.00	196.00	261.00
42	130.00	148.00	199.00	266.00
43	132.00	150.00	203.00	271.00
44	134.00	151.00	206.00	276.00
45	137.00	153.00	210.00	280.00
46	139.00	155.00	213.00	285.00
47	141.00	156.00	216.00	290.00
48	143.00	158.00	220.00	295.00
49	146.00	160.00	223.00	300.00
50	148.00	163.00	229.00	308.00
51	152.00	165.00	232.00	313.00
52	154.00	167.00	236.00	318.00
53	156.00	169.00	239.00	323.00
54	159.00	170.00	243.00	328.00
55	160.00	172.00	246.00	333.00
56	162.00	173.00	250.00	338.00
57	163.00	175.00	253.00	343.00
58	164.00	176.00	256.00	348.00
59	166.00	178.00	260.00	353.00
60	167.00	180.00	263.00	358.00
61	169.00	181.00	267.00	363.00
62	170.00	182.00	270.00	367.00
63	171.00	184.00	274.00	372.00
64	172.00	185.00	277.00	377.00
65	173.00	187.00	281.00	382.00
66	174.00	188.00	284.00	387.00
67	175.00	190.00	287.00	392.00
68	176.00	192.00	291.00	397.00
69	177.00	193.00	294.00	402.00
70	178.00	194.00	298.00	407.00

Weight not over (lbs.)	Rate group 5	Rate group 6	Rate group 7	Rate group 8
0.5	45.00	33.00	34.00	65.00
1	52.00	47.00	46.00	75.00
2	65.00	55.00	52.00	89.00
3	79.00	62.00	60.00	101.00
4	93.00	68.00	68.00	112.00
5	106.00	75.00	75.00	124.00
6	119.00	80.00	82.00	136.00
7	131.00	86.00	89.00	148.00

Weight not over (lbs.)	Rate group 5	Rate group 6	Rate group 7	Rate group 8
8	143.00	91.00	96.00	160.00
9	156.00	96.00	103.00	172.00
10	165.00	102.00	110.00	180.00
11	175.00	105.00	116.00	191.00
12	185.00	109.00	122.00	203.00
13	195.00	113.00	127.00	215.00
14	205.00	117.00	132.00	226.00
15	214.00	121.00	137.00	238.00
16	223.00	125.00	142.00	249.00
17	231.00	129.00	147.00	260.00
18	238.00	133.00	153.00	271.00
19	246.00	137.00	159.00	282.00
20	253.00	141.00	165.00	293.00
21	260.00	144.00	171.00	302.00
22	268.00	148.00	176.00	311.00
23	275.00	152.00	181.00	318.00
24	283.00	156.00	186.00	325.00
25	290.00	160.00	191.00	333.00
26	298.00	164.00	196.00	340.00
27	305.00	168.00	201.00	347.00
28	313.00	172.00	206.00	355.00
29	320.00	176.00	211.00	362.00
30	331.00	182.00	216.00	373.00
31	338.00	186.00	221.00	381.00
32	346.00	190.00	226.00	388.00
33	353.00	194.00	231.00	396.00
34	361.00	198.00	236.00	403.00
35	369.00	202.00	241.00	411.00
36	376.00	206.00	246.00	418.00
37	384.00	210.00	251.00	426.00
38	391.00	214.00	256.00	433.00
39	398.00	218.00	261.00	440.00
40	404.00	222.00	266.00	448.00
41	411.00	226.00	271.00	455.00
42	418.00	230.00	276.00	463.00
43	425.00	234.00	281.00	470.00
44	432.00	238.00	286.00	478.00
45	439.00	242.00	291.00	485.00
46	446.00	246.00	296.00	492.00
47	452.00	250.00	301.00	500.00
48	459.00	254.00	306.00	507.00
49	466.00	258.00	311.00	515.00
50	478.00	264.00	316.00	528.00
51	485.00	264.00	321.00	543.00
52	492.00	272.00	326.00	543.00
53	499.00	276.00	331.00	559.00
54	506.00	280.00	336.00	559.00
55	513.00	283.00	341.00	572.00
56	520.00	288.00	346.00	572.00
57	527.00	291.00	351.00	584.00
58	533.00	296.00	356.00	584.00
59	540.00	299.00	361.00	597.00
60	547.00	304.00	366.00	597.00
61	554.00	307.00	371.00	612.00
62	560.00	313.00	376.00	612.00
63	568.00	315.00	381.00	627.00
64	571.00	321.00	386.00	627.00
65	582.00	323.00	391.00	642.00
66	582.00	329.00	396.00	642.00
67	593.00	331.00	401.00	657.00
68	595.00	337.00	406.00	657.00
69	604.00	339.00	411.00	672.00
70	604.00	345.00	416.00	672.00

216.2 Non-Document Service Rates/Groups

Weight not over (lbs.)	Rate group A	Rate group B	Rate group C	Rate group D
0.5	.....	.....	.....	.....
1	36.00	38.00	44.00	48.00

Weight not over (lbs.)	Rate group A	Rate group B	Rate group C	Rate group D
2	41.00	45.00	51.00	55.00
3	44.00	51.00	58.00	64.00
4	47.00	55.00	65.00	71.00
5	50.00	60.00	72.00	78.00
6	52.00	63.00	77.00	85.00
7	55.00	66.00	81.00	91.00
8	57.00	71.00	86.00	98.00
9	59.00	74.00	91.00	105.00
10	62.00	77.00	95.00	111.00
11	64.00	80.00	100.00	116.00
12	66.00	83.00	104.00	122.00
13	69.00	86.00	107.00	127.00
14	71.00	88.00	111.00	132.00
15	73.00	91.00	114.00	137.00
16	76.00	94.00	117.00	143.00
17	78.00	97.00	121.00	148.00
18	80.00	100.00	124.00	153.00
19	83.00	103.00	128.00	158.00
20	87.00	107.00	131.00	165.00
21	89.00	110.00	134.00	170.00
22	91.00	112.00	138.00	175.00
23	93.00	115.00	141.00	180.00
24	96.00	118.00	145.00	185.00
25	98.00	120.00	148.00	190.00
26	100.00	122.00	153.00	195.00
27	102.00	123.00	157.00	199.00
28	104.00	126.00	160.00	204.00
29	106.00	128.00	163.00	209.00
30	109.00	132.00	168.00	216.00
31	111.00	135.00	172.00	221.00
32	113.00	137.00	175.00	226.00
33	115.00	139.00	179.00	231.00
34	118.00	141.00	182.00	236.00
35	120.00	143.00	185.00	241.00
36	122.00	145.00	189.00	245.00
37	124.00	147.00	192.00	250.00
38	126.00	149.00	196.00	255.00
39	128.00	151.00	199.00	260.00
40	130.00	153.00	202.00	268.00
41	132.00	155.00	206.00	273.00
42	136.00	157.00	209.00	278.00
43	138.00	159.00	213.00	283.00
44	140.00	160.00	216.00	288.00
45	143.00	162.00	220.00	295.00
46	145.00	164.00	223.00	300.00
47	147.00	165.00	226.00	305.00
48	149.00	167.00	230.00	310.00
49	151.00	169.00	233.00	315.00
50	152.00	172.00	239.00	320.00
51	156.00	174.00	242.00	325.00
52	158.00	176.00	246.00	330.00
53	160.00	178.00	249.00	335.00
54	163.00	179.00	253.00	340.00
55	164.00	181.00	256.00	345.00
56	166.00	182.00	260.00	350.00
57	167.00	184.00	263.00	355.00
58	168.00	185.00	266.00	360.00
59	170.00	187.00	270.00	365.00
60	170.00	189.00	273.00	370.00
61	172.00	193.00	277.00	375.00
62	173.00	194.00	280.00	379.00
63	174.00	196.00	284.00	384.00
64	175.00	197.00	287.00	389.00
65	176.00	199.00	291.00	394.00
66	177.00	200.00	294.00	399.00
67	178.00	202.00	297.00	404.00
68	179.00	204.00	301.00	409.00
69	180.00	205.00	304.00	414.00
70	181.00	206.00	308.00	419.00

Weight not over (lbs.)	Rate group E	Rate group F	Rate group G	Rate group H
0.5	59.00	52.00	55.00	82.00
1	59.00	52.00	55.00	82.00
2	72.00	60.00	58.00	96.00
3	86.00	67.00	63.00	109.00
4	100.00	73.00	70.00	120.00
5	113.00	80.00	77.00	134.00
6	126.00	85.00	84.00	146.00
7	138.00	91.00	91.00	158.00
8	150.00	96.00	98.00	170.00
9	163.00	101.00	105.00	182.00
10	177.00	107.00	112.00	190.00
11	187.00	112.00	118.00	206.00
12	197.00	116.00	123.00	218.00
13	207.00	120.00	129.00	230.00
14	217.00	124.00	134.00	241.00
15	229.00	131.00	139.00	253.00
16	238.00	135.00	144.00	264.00
17	246.00	139.00	149.00	275.00
18	253.00	143.00	155.00	286.00
19	261.00	147.00	161.00	297.00
20	268.00	151.00	167.00	308.00
21	275.00	154.00	173.00	317.00
22	283.00	158.00	178.00	326.00
23	290.00	162.00	183.00	333.00
24	298.00	166.00	188.00	340.00
25	305.00	170.00	193.00	348.00
26	313.00	174.00	198.00	355.00
27	320.00	178.00	203.00	362.00
28	328.00	182.00	208.00	370.00
29	335.00	186.00	213.00	377.00
30	346.00	192.00	218.00	388.00
31	353.00	196.00	223.00	396.00
32	361.00	200.00	228.00	403.00
33	368.00	204.00	233.00	411.00
34	376.00	208.00	238.00	418.00
35	384.00	212.00	243.00	431.00
36	391.00	216.00	248.00	438.00
37	399.00	220.00	253.00	446.00
38	406.00	224.00	258.00	453.00
39	413.00	228.00	263.00	460.00
40	419.00	232.00	268.00	468.00
41	426.00	236.00	273.00	475.00
42	433.00	240.00	278.00	483.00
43	440.00	244.00	283.00	490.00
44	447.00	248.00	288.00	498.00
45	454.00	252.00	293.00	505.00
46	461.00	256.00	298.00	507.00
47	467.00	260.00	303.00	515.00
48	474.00	264.00	308.00	522.00
49	481.00	268.00	313.00	530.00
50	493.00	274.00	318.00	543.00
51	498.00	276.00	323.00	558.00
52	505.00	282.00	328.00	558.00
53	512.00	286.00	333.00	574.00
54	519.00	290.00	338.00	574.00
55	526.00	293.00	343.00	587.00
56	533.00	298.00	348.00	587.00
57	540.00	301.00	353.00	599.00
58	546.00	306.00	358.00	599.00
59	553.00	309.00	363.00	612.00
60	560.00	314.00	368.00	612.00
61	567.00	317.00	373.00	627.00
62	573.00	323.00	378.00	627.00
63	581.00	325.00	383.00	642.00
64	584.00	331.00	388.00	642.00
65	595.00	333.00	393.00	657.00
66	595.00	339.00	398.00	657.00
67	606.00	341.00	403.00	672.00
68	608.00	347.00	408.00	672.00
69	617.00	349.00	413.00	687.00
70	617.00	355.00	418.00	687.00

* * * * *

Stanley F. Mires,

Chief Counsel, Legislative.

[FR Doc. 00–31358 Filed 12–8–00; 8:45 am]

BILLING CODE 7710–12–P

ENVIRONMENTAL PROTECTION AGENCY

40 CFR Part 52

[CA 224–0268; FRL–6908–1]

Revisions to the California State Implementation Plan, Ventura County Air Pollution Control District

AGENCY: Environmental Protection Agency (EPA).

ACTION: Final rule.

SUMMARY: EPA is finalizing a limited approval and limited disapproval of a revision to the Ventura County Air Pollution Control District's (VCAPCD) portion of the California State Implementation Plan (SIP). This action was proposed in the **Federal Register** on August 9, 2000 and concerns volatile organic compound (VOC) emissions from surface cleaning and degreasing. Under authority of the Clean Air Act as amended in 1990 (CAA or the Act), this action simultaneously approves a local rule that regulates this emission source and directs California to correct rule deficiencies.

EFFECTIVE DATE: This rule is effective on January 10, 2001.

ADDRESSES: You can inspect copies of the administrative record for this action at EPA's Region IX office during normal business hours. You can inspect copies of the submitted SIP revisions at the following locations:

Environmental Protection Agency, Region IX, 75 Hawthorne Street, San Francisco, CA 94105–3901.

Environmental Protection Agency, Air Docket (6102), Ariel Rios Building, 1200 Pennsylvania Avenue, N.W., Washington D.C. 20460.

California Air Resources Board, Stationary Source Division, Rule Evaluation Section, 2020 ''L'' Street, Sacramento, CA 95812.

Ventura County Air Pollution Control District, 669 County Square Dr., 2nd Fl., Ventura, CA 93003–5417.

FOR FURTHER INFORMATION CONTACT: Yvonne Fong, Rulemaking Office (AIR–4), U.S. Environmental Protection Agency, Region IX, (415) 744–1199.

SUPPLEMENTARY INFORMATION: Throughout this document, ''we,'' ''us'' and ''our'' refer to EPA.

I. Proposed Action

On August 9, 2000 (65 FR 48652), EPA proposed a limited approval and limited disapproval of the following rule that was submitted for incorporation into the California SIP.

Local agency	Rule No.	Rule title	Adopted	Submitted
VCAPCD	74.6	Surface Cleaning and Degreasing	11/10/98	02/16/99

We proposed a limited approval because we determined that this rule improves the SIP and is largely consistent with the relevant CAA requirements. We simultaneously proposed a limited disapproval because some rule provisions conflict with section 110 and part D of the Act. These provisions are described below.

- Rule 74.6 contains two director's discretion clauses in Sections C and C2a which are unapprovable because they allow the APCO to change SIP requirements without going through the rulemaking process.
- Section C1f contains a reference to Rule 74.32, Electronic Manufacturing Operations, which has never been submitted for approval into the SIP. The reference creates confusion over the rule's applicability.
- Section D requires that records of a solvent's intended uses, content, mix ratio be recorded. Although the types of records that must be maintained are specified, the frequency with which records should be kept is not specified.

II. Public Comments and EPA Responses

EPA's proposed action provided a 30-day public comment period. During this period, we did not receive any comments.

III. EPA Action

Because no comments were submitted, our assessment of the rule as described in our proposed action is not changed. Therefore, as authorized in sections 110(k)(3) and 301(a) of the Act, EPA is finalizing a limited approval of the submitted rule. This action incorporates the submitted rule into the California SIP, including those provisions identified as deficient. As authorized under section 110(k)(3), EPA is simultaneously finalizing a limited disapproval of the rule. As a result, sanctions will be imposed unless EPA approves subsequent SIP revisions that correct the rule deficiencies within 18 months of the effective date of this action. These sanctions will be imposed under section 179 of the Act according to 40 CFR 52.31. In addition, EPA must promulgate a federal implementation plan (FIP) under section 110(c) unless we approve subsequent SIP revisions that correct the rule deficiencies within 24 months. Note that the submitted rules have been adopted by the VCAPCD, and EPA's final limited disapproval does not prevent the local agency from enforcing them.

IV. Administrative Requirements

Under Executive Order 12866 (58 FR 51735, October 4, 1993), this action is not a ''significant regulatory action'' and therefore is not subject to review by the Office of Management and Budget. This action merely approves state law as meeting federal requirements and imposes no additional requirements beyond those imposed by state law. Accordingly, the Administrator certifies that this rule will not have a significant economic impact on a substantial number of small entities under the Regulatory Flexibility Act (5 U.S.C. 601 *et seq.*). Because this rule approves pre-existing requirements under state law and does not impose any additional enforceable duty beyond that required by state law, it does not contain any unfunded mandate or significantly or uniquely affect small governments, as described in the Unfunded Mandates Reform Act of 1995 (Public Law 104–4). For the same reason, this rule also does not significantly or uniquely affect the communities of tribal governments, as specified by Executive Order 13084 (63 FR 27655, May 10, 1998). This rule will not have substantial direct effects on the States, on the relationship between the national government and the States, or on the distribution of power and responsibilities among the various levels of government, as specified in Executive Order 13132 (64 FR 43255, August 10, 1999), because it merely approves a state rule implementing a federal standard, and does not alter the relationship or the distribution of power and responsibilities established in the Clean Air Act. This rule also is not subject to Executive Order 13045 (62 FR 19885, April 23, 1997), because it is not economically significant.

In reviewing SIP submissions, EPA's role is to approve state choices, provided that they meet the criteria of the Clean Air Act. In this context, in the absence of a prior existing requirement for the State to use voluntary consensus standards (VCS), EPA has no authority to disapprove a SIP submission for failure to use VCS. It would thus be inconsistent with applicable law for EPA, when it reviews a SIP submission, to use VCS in place of a SIP submission that otherwise satisfies the provisions of the Clean Air Act. Thus, the requirements of section 12(d) of the National Technology Transfer and Advancement Act of 1995 (15 U.S.C. 272 note) do not apply. As required by section 3 of Executive Order 12988 (61 FR 4729, February 7, 1996), in issuing this rule, EPA has taken the necessary steps to eliminate drafting errors and ambiguity, minimize potential litigation, and provide a clear legal standard for affected conduct. EPA has complied with Executive Order 12630 (53 FR 8859, March 15, 1988) by examining the takings implications of the rule in accordance with the ''Attorney General's Supplemental Guidelines for the Evaluation of Risk and Avoidance of Unanticipated Takings'' issued under the executive order. This rule does not impose an information collection burden under the provisions of the Paperwork Reduction Act of 1995 (44 U.S.C. 3501 *et seq.*).

The Congressional Review Act, 5 U.S.C. 801 *et seq.*, as added by the Small Business Regulatory Enforcement Fairness Act of 1996, generally provides that before a rule may take effect, the agency promulgating the rule must submit a rule report, which includes a copy of the rule, to each House of the Congress and to the Comptroller General of the United States. EPA will submit a report containing this rule and other required information to the U.S. Senate, the U.S. House of Representatives, and the Comptroller General of the United States prior to publication of the rule in the **Federal Register**. A major rule cannot take effect until 60 days after it is published in the **Federal Register**. This action is not a ''major rule'' as defined by 5 U.S.C. 804(2).

Under section 307(b)(1) of the Clean Air Act, petitions for judicial review of this action must be filed in the United States Court of Appeals for the appropriate circuit by February 9, 2001. Filing a petition for reconsideration by the Administrator of this final rule does not affect the finality of this rule for the purposes of judicial review nor does it extend the time within which a petition for judicial review may be filed, and shall not postpone the effectiveness of such rule or action. This action may not be challenged later in proceedings to enforce its requirements. (See section 307(b)(2).)

List of Subjects in 40 CFR Part 52

Environmental protection, Air pollution control, Incorporation by reference, Intergovernmental relations, Ozone, Reporting and recordkeeping requirements, Volatile organic compounds.

Dated: November 1, 2000

Felicia Marcus,

Regional Administrator, Region IX.

Part 52, Chapter I, Title 40 of the Code of Federal Regulations is amended as follows:

PART 52—[AMENDED]

1. The authority citation for part 52 continues to read as follows:

Authority: 42 U.S.C. 7401 *et seq.*

Subpart F—California

2. Section 52.220 is amended by adding paragraphs (c)(262)(i)(B)(*3*) to read as follows:

§ 52.220 Identification of plan.

* * * * *

(c) * * *

(262) * * *

(i) * * *

(B) * * *

(*3*) Rule 74.6, revised on November 10, 1998.

* * * * *

[FR Doc. 00–31330 Filed 12–8–00; 8:45 am]

BILLING CODE 6560–50–P

ENVIRONMENTAL PROTECTION AGENCY

40 CFR Parts 52 and 81

[OH–138–2; FRL–6914–7]

Approval and Promulgation of Implementation Plans and Designation of Areas for Air Quality Planning Purposes; Ohio

AGENCY: Environmental Protection Agency (EPA).

ACTION: Final rule.

SUMMARY: EPA is redesignating Cuyahoga and Jefferson Counties, Ohio, to attainment for particulate matter nominally 10 microns in aerodynamic diameter and smaller (PM10). EPA is also approving Ohio's plan for maintaining air quality at levels below the applicable air quality standards.

EPA proposed these actions on July 10, 2000. One commenter submitted numerous comments, generally taking the position that the criteria for redesignation to attainment given in Clean Air Act section 107(d)(3)(E) are not met. EPA has reviewed these comments and, for the reasons set forth below, continues to believe that the redesignation criteria have been met and that these areas may be redesignated and their maintenance plans approved.

The Steubenville area includes portions of Brooke County, West Virginia, as well as Jefferson County, Ohio. For administrative convenience EPA is taking action only on the Ohio portion of this area. Nevertheless, the action reflects review of air quality for the entire area and Ohio's fulfillment of its portion of an area-wide attainment plan that it developed jointly with West Virginia. In the future, if the standard is violated in either portion of the area, such that redesignation back to nonattainment is warranted, EPA will propose to reinstate nonattainment status for the entire area.

EFFECTIVE DATE: This action will be effective on January 10, 2001.

ADDRESSES: Copies of the Ohio's submittals and other information are available for inspection during normal business hours at the following address: (We recommend that you telephone John Summerhays at (312) 886–6067, before visiting the Region 5 Office) United States Environmental Protection Agency, Region 5, Air Programs Branch (AR–18J), Regulation Development Section, 77 West Jackson Boulevard, Chicago, Illinois 60604.

FOR FURTHER INFORMATION CONTACT: John Summerhays, Environmental Scientist, United States Environmental Protection Agency, Region 5, Air Programs Branch (AR–18J), Regulation Development Section, 77 West Jackson Boulevard, Chicago, Illinois 60604, (312) 886–6067, *(summerhays.john@epa.gov).*

SUPPLEMENTARY INFORMATION: The terms ''we,'' ''us,'' and ''our'' in this notice signify EPA. This notice is organized as follows:

Table of Contents

I. What actions did EPA propose, and why?
II. What comments did EPA receive and what are our responses?
III. What actions is EPA taking, and why?
IV. Administrative requirements.
A. Executive Order 12866
B. Executive Order 13045
C. Executive Order 13084
D. Executive Order 13132
E. Executive Order 12898
F. Regulatory Flexibility
G. Unfunded Mandates
H. Submission to Congress and the Comptroller General
I. National Technology Transfer and Advancement Act

J. Petitions for Judicial Review

I. What Actions Did EPA Propose, and Why?

On July 10, 2000, EPA published rulemaking proposing to approve a maintenance plan and redesignation of Cuyahoga and Jefferson Counties, Ohio, to attainment for particulate matter, specifically for particles known as PM_{10}. (See 65 FR 43212.) This proposal was based on a request from the State of Ohio submitted in preliminary form on May 22, 2000. This action pertains to the PM_{10} standards promulgated in 1987 at 40 CFR 50.6, for which designations are published at 40 CFR 81. This action does not pertain to the PM_{10} standards promulgated in 1997 at 40 CFR 50.7, which have been vacated by the District of Columbia Circuit Court of Appeals and for which no designations have been published.

Ohio's maintenance plan relies predominantly on the emissions limits already included in its State Implementation Plan (SIP) that have been shown to limit emissions from the significant sources in these areas sufficiently to assure attainment. The attainment plan addresses maximum allowable emissions, so the plan provides for continued attainment even if source production rates grow to maximum capacity. Ohio's maintenance plan supplements this with evidence of declining impacts from other, unregulated sources, which contribute to the background concentration included in the attainment demonstration. Specifically, Ohio cited population declines in the two counties, which will lead to reduced emissions from consumer activities, and federal regulations requiring reduced emissions from diesel engines. Ohio further cited emission regulations which will reduce emissions below attainment levels at the coke batteries found in the two areas. EPA proposed to conclude on the basis of these plan elements that these counties can be expected to continue attaining the applicable PM_{10} standards for the requisite 10 years.

EPA reviewed Ohio's redesignation request on the basis of five criteria given in section 107(d)(3)(E) of the Clean Air Act. The first criterion is attainment of the air quality standards. All monitors have annual average concentrations below the annual standard. The 24-hour standard is met if the expected frequency of values above 150 $\mu g/m^3$ is 1.0 day per year or less. All the monitors in the Steubenville area and most of the monitors in Cuyahoga County have recorded no recent exceedances of this air quality standard. These monitors clearly indicate attainment of these standards. Two monitors in Cleveland have recorded values above 150 $\mu g/m^3$, requiring analysis of expected exceedances at these locations consistent with the provisions of Appendix K of 40 CFR 50. EPA found a sufficiently low expected frequency of exceedances to propose to conclude that these locations, like the rest of Cuyahoga County, are attaining the standards.

The second criterion is that EPA has fully approved the necessary air quality control plans. EPA has previously concluded that relevant requirements were met, as stated in rulemakings published on May 27, 1994, at 59 FR 27464, and June 12, 1996, at 61 FR 29662, supplementing earlier rulemakings. In acting on redesignation requests, EPA has consistently interpreted section 107(d)(3) as permitting the Agency to rely on prior approvals of SIP provisions when reviewing redesignation requests. See Memorandum from John Calcagni, Director of the Air Quality Management Division dated September 4, 1992. For a recent discussion of redesignation requirements see 65 FR 37879 (June 19, 2000) (redesignation to attainment for ozone of the Cincinnati-Hamilton moderate ozone nonattainment area).

The third criterion for redesignation is that attainment be attributable to permanent and enforceable emission reductions. EPA found that permanent and enforceable emission limits have yielded permanent emission reductions that satisfied this criterion at numerous facilities in the two counties. The fourth criterion is that EPA has approved a maintenance plan that assures continued attainment. As discussed above, EPA proposed to approve Ohio's maintenance plan. Final approval of this plan, which is part of today's action, completes the satisfaction of this criterion. The fifth criterion is that the State be found to have met applicable requirements of section 110 and Part D of the Clean Air Act. Based on various rulemakings, starting with rulemaking of April 15, 1974 (39 FR 13539) up to and including EPA's rulemaking of June 12, 1996 (61 FR 29662), EPA finds that the State met these requirements. In summary, EPA proposed to find that Ohio had met all five criteria for redesignation for PM_{10} in Cuyahoga and Jefferson Counties, and so EPA proposed to redesignate these counties to attainment.

II. What Comments Did We Receive and What Are Our Responses?

EPA received comments from one commenter, the Earthjustice Legal Defense Fund, representing the Ohio Chapter of the Sierra Club. These comments are organized according to the five criteria for redesignation listed above. The following comment summaries and EPA responses are organized accordingly.

1. Attainment

Comment: The commenter cites EPA's Air Information Retrieval System (AIRS) database as showing that one of the monitoring sites, at East 14th Street and Orange Avenue in Cleveland, ''had 6 expected exceedances of the 24 hour PM_{10} standard in 1999. Moreover, AIRS data shows that the same monitor has recorded 6 expected exceedances so far in the year 2000.'' The commenter states that the total of 12 expected exceedances at this site means that the area has not attained the standard.

The commenter further states that ''EPA seeks to discount the 6 expected exceedances in 1999 at [the above site] by citing data from other monitors that did not exceed the standard that year.'' The commenter states that disregarding violations based on data at other sites is not authorized in Appendix K, and EPA may not use guidance documents to amend Appendix K to grant itself this authority.

Response: The commenter summarizes air quality at the East 14th Street site by reporting a statistic from a summary of air quality data that EPA provides on the internet. By its nature, this summary statistic is derived by an oversimplified approach, and thus inaccurately reflects what the data show. This statistic in this context is derived by automated, default procedures that cannot make the case-by-case judgments involved in assessing attainment status for regulatory purposes. For example, the statistic that the commenter cites does not reflect judgments that must be made by EPA, such as whether to exempt the site from expected exceedance adjustments pursuant to Appendix K section 3.1(f) and 40 CFR 58.13. A more appropriate evaluation of the 1999 data at this site is presented in the notice of proposed rulemaking. This evaluation indicates that only approximately one exceedance is expected at that location. A similar evaluation of the 2000 data at this site, as described further below, also indicates approximately one exceedance is expected. Based on these data, EPA is determining that the 3-year average number of expected exceedances at this site is less than the 1.0 level, and thus the site is in attainment consistent with section 2.1 of Appendix K.

It is also apparent that the commenter may have misunderstood the discussion in the proposal relating to the

historically worst-case site that adjoins the East 14th Street site. Contrary to the assertion in the comment, EPA is not using data from other monitors to discount a violation at the East 14th Street site. Instead, EPA is assessing whether a violation in fact occurred at the East 14th Street site.

The East 14th Street site has two instruments—a high volume sampler, taking samples once every six days, and an instrument that takes continuous concentration readings. The high volume sampler recorded an exceedance of the 24-hour PM_{10} standard at this site in 1999 (as well as an exceedance in 2000). EPA's evaluation of these high volume sampler data appropriately considers data from the collocated continuous instrument as well as data from another nearby location. Specifically, EPA is using the additional data to evaluate the likelihood of exceedances on the other five out of six days on which the high volume sampler did not take measurements.

One element of EPA's evaluation is based on Appendix K section 3.1(f), for which EPA must consider whether everyday sampling has been conducted in accordance with 40 CFR 58.13. In 40 CFR 58.13, as it applies to sampling for this PM_{10} standard, EPA calls for everyday sampling at the area of maximum concentration. Accordingly, the notice of proposed rulemaking describes an assessment in which the application of Appendix K section 3.1(f) to the East 14th Street site is contingent on daily sampling at a nearby, maximum concentration site. As discussed in the notice of proposed rulemaking, application of Appendix K section 3.1(f) contingent on daily sampling at the East 14th Street site yields the same result. Both methods lead to treating the measured exceedance as one expected exceedance, which leads to a finding that the standard is being attained.

When EPA promulgated Appendix K, it was concerned, in part, about how to appropriately interpret data from monitors taking measurements one day out of six days when they measure just one exceedance. EPA recognized that the occasional measurement of one exceedance by such monitors often does not signify that five other exceedances would be expected to occur on the unmonitored days. Therefore, section 3.1(f) of Appendix K provides that an adjustment, that entails treating one exceedance as reflecting six (or more) expected exceedances (which is otherwise required to account for missing or incomplete data), need not be done if complete daily, representative sampling is performed and related conditions are met. If complete daily, representative sampling then shows few or no exceedances, this would validate the view that the exceedance measured during one-in-six-day sampling is better interpreted as reflecting one rather than six (or more) expected exceedances. (Conversely, if daily sampling indicates frequent exceedances, EPA would have a more solid basis for concluding that the site is not attaining.)

The monitoring at the East 14th Street site poses unique circumstances not directly addressed in Appendix K. Appendix K does not specify how to interpret data from two instruments which measure air quality at the same location. EPA has issued guidance explaining how to assess expected exceedances for both instruments in such cases. However, neither Appendix K nor EPA's guidance specifies how to conduct this assessment in cases where the sampling frequencies of the two instruments differ.

The history of Appendix K helps clarify why it does not directly address the situation found at the East 14th Street site. Appendix K was promulgated in 1987, at a time when reliable continuous instruments for measuring particulate matter concentrations were not available. Since high volume sampling and filter collection and analysis on a daily basis is resource intensive, EPA encouraged States to conduct sampling once every six days at numerous sites, with only a small number of critical sites sampling on a daily basis. When it encouraged this approach, EPA did not intend that any sampler measuring once every six days that happened to record an exceedance would automatically be treated as showing nonattainment, which is the approach reflected in the commenter's interpretation of the air quality data summary posted on the internet. EPA intended instead that such sampling sites be identified as critical sites warranting the dedication of resources necessary to conduct daily sampling, in order to determine whether the exceedance recurs with a frequency of more than once per year.

In promulgating Appendix K, EPA did not anticipate the possibility that States might simultaneously operate one sampler on a once in six days basis and operate a second sampler at the same site on a daily basis. Even today, sites with instruments measuring air quality once every six days almost never have a collocated instrument simultaneously taking daily or continuous measurements. Therefore, the one-in-six-day data are ordinarily the only basis on which to estimate the likelihood that exceedances would have been observed on the other five days. In such cases, if the site does not meet the criteria in section 3.1(f) of Appendix K that qualifies it to be exempt from expected exceedance adjustment, then EPA would view the five unmonitored days as days with missing data. Under Appendix K, for such cases, EPA takes a protective approach by assuming that the likelihood of exceedances for those five out of six days equals the likelihood of exceedances for the one in six days with actual observations. (See section 3.1(a).)

In the case of the East 14th Street site, the continuous instrument provides extensive data with potential to help EPA evaluate the likelihood that the high volume sampler would have recorded exceedances on the five out of six days it was not sampling. EPA therefore examined whether the continuous instrument data would reliably indicate whether the high volume sampler would have recorded an exceedance.

EPA compared 24-hour averages from the two instruments for days in 1998 to 2000 when both instruments had valid data. Then EPA developed what is known as a ''best fit'' equation, which attempts to describe, as accurately as possible, the relationship between same-day readings of the two instruments. On average, the high volume sampler reading equaled 1.05 times the continuous instrument reading plus 0.2 micrograms per cubic meter ($\mu g/m^3$), with a variance (r^2) of 0.78. In no case did the high volume sampler record any value more than 27 $\mu g/m^3$ higher than the continuous instrument. Thus, from a sampling perspective, readings from the two instruments would be considered quite similar.

Consequently, EPA concluded that data from the continuous instrument is reliable for use in assessing expected exceedances for the high volume sampler. Specifically, given the excellent agreement between the measurements produced by the two instruments, EPA believes the days with continuous instrument measurements but no high volume sampler measurements should be treated as days with valid data indicating high volume sampler concentrations. That is, consistent with the provisions of Appendix K, the best assessment of expected exceedances under these circumstances would be to consider all days with data from either instrument as days with valid data, and to treat as days with missing data only those days in which neither the high volume sampler nor the continuous instrument was operating. For purposes of this assessment, a day with only continuous

instrument data is considered by EPA as having a value below the standard only if the maximum difference in instrument readings added to the continuous instrument value indicates a high volume sampler value below the level of the standard.

EPA described its assessment of the 1999 data in its notice of proposed rulemaking. Briefly, the high volume sampler recorded an exceedance during the first quarter. This first quarter included 14 days with high volume sampler values and 74 additional days with only continuous instrument values. Two days had no value from either instrument and, under Appendix K, should be considered days with missing data. The 14 days with high volume sampler values included one day with a measured exceedance and 13 days with values below the standard. For the 74 additional days with only continuous instrument values, the highest such value was 75 μg/m³. This continuous instrument value leads to a best estimated peak value for the high volume sampler of 79 μg/m³ (using the best fit equation), and leads to a worst case peak estimate of 102 μg/m³ (applying the maximum difference in instrument values). Based on the explanation above, the data from all of these 74 days will be treated by EPA as valid data. In total, then, for the high volume sampler in the first quarter of 1999, one day had an exceedance, 87 days have concentrations that are well below the standard of 150 μg/m³, and two days are lacking data. According to Appendix K, the proposed rulemaking therefore calculated an estimate of expected exceedances to be 1 + (2 * 1/88) or 1.02. Since no exceedances were measured at the site in any other quarter of 1999 or in 1998 or 1997, the total expected exceedances for 1999 is 1.02, and the three-year average of expected exceedances is 0.3.

A second unique feature of the situation at the East 14th Street site is the occurrence of a second exceedance measured by the instrument sampling once in six days. In ordinary circumstances, *i.e.,* in the absence of collocated daily sampling data, EPA assumes that the first measured exceedance often reflects only about one expected exceedance, but EPA would generally assume that a second exceedance measured by a one-in-six day sampler represents multiple expected exceedances. However, EPA does not need to rely on such assumptions at the East 14th Street site, since in this case EPA has a wealth of actual data with which to assess the likelihood of exceedances at the site.

EPA therefore estimated expected exceedances for 2000 according to the same method it used to evaluate the 1999 data. An exceedance was observed by the high volume sampler in the first quarter of 2000. The high volume sampler provided values for 15 of the 91 days. The continuous sampler provided valid data for an additional 73 days. The highest 24-hour average for these 73 days was 84 μg/m³, suggesting a best estimated peak high volume sampler value of 88 μg/m³ and a worst case estimated high volume sampler value of 111 μg/m³. Three days have missing values. These data indicate that only 1 out of 88 days with valid data had an exceedance. Consequently, expected exceedances for the quarter are estimated at 1 + (3 * 1/88) or 1.03. The second quarter had no observed exceedances. Thus, the available data for 2000 at this site indicate 1.03 expected exceedances.

Appendix K does not provide for us to include a half year's worth of data results in calculating the three year average of expected exceedances. Thus, consideration of data for the first half of 2000 by necessity involves projecting likely air quality in the second half of 2000. EPA examined data at the East 14th Street site to judge the most plausible such projection. In the past, the East 14th Street site has not been prone to observe exceedances in the second half of the year. In the 7½ year history at this site, all three days with recorded exceedances have been in March. Therefore, EPA has good reason to anticipate that no further exceedances will be measured at this site in 2000. Assuming no further exceedances for the remainder of 2000 is equivalent to using data from a previous July to December period, for example constructing an assessment for 1998 to 2000 by using data from the second half of 1997 as a surrogate for projected data for the second half of 2000. This suggests a total of 1.03 expected exceedances for 2000. This result, in combination with the 1.02 expected exceedances for 1999 and zero expected exceedances for 1998, indicates a 3-year average of 0.7 expected exceedances.

The above presents EPA's evaluation of the frequency with which the high volume sampler at the East 14th Street site would have recorded exceedances had it been operating every day. One may do a similar evaluation for the continuous instrument at this site. This continuous instrument recorded no exceedances from the day it began operating in April 1998 to the present. This instrument was not operating on March 31, 1999, when the high volume sampler recorded an exceedance, but the high volume sampler data for that date suggest treating that day as a day the continuous instrument would be expected to have had an exceedance. Considering missing data according to Appendix K, this suggests 1.02 expected exceedances for the first quarter of 1999. While data are not available for a proper 3-year average of expected exceedances, the data that are available clearly suggest an average of less than 1.0 expected exceedances for this instrument. Thus, both instruments at the East 14th Street site indicate that this site is attaining the standard.

The commenter provided no rationale for using the computer-generated statistic he cited rather than applying the judgments and procedures described in the notice of proposed rulemaking, even though the two methods clearly give different results. For reasons given here and in the notice of proposed rulemaking, EPA believes that the evaluation described here is more consistent with applicable PM_{10} regulations and reflects more reasoned judgments about the air quality at the site in question. EPA is determining on the basis of this evaluation that this site, like the remainder of Cuyahoga County, is attaining the standard.

2. Fully Approved SIP

Comment: The second prerequisite for redesignation to attainment is that EPA has fully approved the applicable SIP for the area. The commenter states that this prerequisite has not been met because EPA has not fully approved either the state's new source review (NSR) programs or the motor vehicle emission budget for these areas. With respect to NSR, the commenter states that this program is ''not an optional program that the state and EPA can simply waive based on claims that it is not 'needed' for attainment.'' With respect to conformity, the commenter cites Section 176(c) of the Clean Air Act and states that the absence of a motor vehicle emissions budget and conformity procedures means that EPA has not met all SIP requirements applicable to the area.

Response: EPA continues to believe that it has fully approved the applicable SIP for Cuyahoga and Jefferson Counties. For the requirements added in the Clean Air Act Amendments of 1990, in Subpart 4 of Part D of the Clean Air Act, EPA approved Ohio's attainment demonstration and other related plan elements on June 12, 1996, at 61 FR 29662. EPA has published several earlier rulemakings approving Ohio's SIP as meeting the various requirements enacted earlier.

With respect to NSR, EPA believes that Cuyahoga and Jefferson Counties may be redesignated to attainment notwithstanding the lack of a fully-approved NSR program meeting the requirements of the 1990 Clean Air Act Amendments. This view has been set forth by EPA in a memorandum from Mary Nichols, Assistant Administrator for Air and Radiation, dated October 14, 1994, entitled ''Part D New Source Review (part D NSR) Requirements for Areas Requesting Redesignation to Attainment.'' Also, see Cincinnati-Hamilton redesignation (65 FR 37879, June 19, 2000) and Grand Rapids, Michigan redesignation (61 FR 31834–31837, June 21, 1996). This policy has also been applied in ozone redesignations of Youngstown-Warren, Columbus, Canton, Cleveland-Akron-Lorain, Dayton-Springfield, Toledo, Preble County, Columbiana County, and Clinton County, Ohio, as well as Detroit, Michigan.

EPA believes that its decision not to insist on a fully approved NSR program as a prerequisite to redesignation is justifiable as an exercise of the Agency's general authority to establish de minimis exceptions to statutory requirements. See *Alabama Power Co.* v. *Costle,* 636 F.2d 323, 360–61 (D.C. Cir. 1979). Under *Alabama Power Co.* v. Costle, EPA has the authority to establish de minimis exceptions to statutory requirements where the application of the statutory requirements would be of trivial or no value environmentally. In this context, the issue presented is whether EPA has the authority to establish an exception to the requirements of section 107(d)(3)(E) that EPA must fully approve a SIP meeting all of the requirements applicable to an area under section 110 and part D of title I of the Clean Air Act before redesignating the area. Plainly, the NSR provisions of section 110 and part D are requirements that were applicable to Cuyahoga and Jefferson Counties at the time of the submission of the request for redesignation. Thus, on its face, section 107(d)(3)(E) would seem to require that the State submit and EPA fully approve a part D NSR program meeting the requirements of the Clean Air Act before an area could be redesignated to attainment. Under EPA's de minimis authority, however, the agency may establish an exception to an otherwise plain statutory requirement if its fulfillment would be of little or no environmental value. Therefore, it is necessary to determine what would be achieved by insisting that there be a fully-approved part D NSR program in place prior to the redesignation of Cuyahoga and Jefferson Counties.

EPA believes that requiring the adoption and full approval of a part D NSR program prior to redesignation would not be of significant environmental value in this case. When an area is redesignated to attainment, a new source must satisfy prevention of significant deterioration (PSD) requirements rather than nonattainment new source review. PSD requires that new sources demonstrate that their construction will not increase ambient concentrations significantly and will not result in concentrations above the air quality standard. This may be compared to requirements under nonattainment area new source review for new sources to secure emission reductions to offset their new emissions. EPA believes that there would be trivial if any environmental value of applying nonattainment new source requirements in Cuyahoga and Jefferson Counties rather than PSD requirements.

The other purpose that requiring the full approval of a part D NSR program might serve is to ensure that NSR would become a contingency provision in the maintenance plan required for these areas by section 107(d)(3)(E)(iv) and 175A(d). These provisions require that for an area to be redesignated to attainment, it must receive full approval of a maintenance plan containing ''such contingency provisions as the Administrator deems necessary to assure that the State will promptly correct any violation of the standard which occurs after the redesignation of the area as an attainment area. Such provisions shall include a requirement that the State will implement all measures with respect to the control of the air pollutant concerned which were contained in the SIP for the area before redesignation of the area as an attainment area.'' Based on this language, it is apparent that whether an approved NSR program must be included as a contingency provision depends on whether it is a ''measure'' for the control of the pertinent air pollutants.

The term ''measure'' is not defined in section 175A(d) and Congress utilized that term differently in different provisions of the Clean Air Act with respect to the PSD and NSR permitting programs. For example, in section 110(a)(2)(A), Congress requires that SIPs include ''enforceable emission limitations and other control measures, means, or techniques * * * as may be necessary or appropriate to meet the applicable requirements of the Act.'' In section 110(a)(2)(C), Congress requires that SIPs include ''a program to provide for the enforcement of the measures described in subparagraph (A), and regulation of the modification and construction of any stationary source within the areas covered by the plan as necessary to assure that NAAQS are achieved, including a permit program as required in parts C and D.'' If the term ''measures'' as used in section 110 (a)(2)(A) and (C) had been intended to include PSD and NSR there would have been no point to requiring that SIPs include both measures and preconstruction review under parts C and D (PSD or NSR). Unless ''measures'' referred to something other than preconstruction review under parts C and D, the reference to preconstruction review programs in section 110(a)(2)(C) would be rendered mere surplusage. Thus, in section 110(a)(2) (A) and (C), it is apparent that Congress distinguished ''measures'' from preconstruction review. On the other hand, in other provisions of the Clean Air Act, such as section 161, Congress appeared to include PSD within the scope of the term ''measures.''

EPA believes that the fact that Congress used the undefined term ''measure'' differently in different sections of the Clean Air Act is germane. This indicates that the term is susceptible to more than one interpretation and that EPA has the discretion to interpret it in a reasonable manner in the context of section 175A. Inasmuch as Congress itself has used the term in a manner that excluded PSD and NSR from its scope, EPA believes it is reasonable to interpret ''measure,'' as used in section 175A(d), not to include NSR. That this is a reasonable interpretation is further supported by the fact that PSD, a program that is the corollary of part D NSR for attainment areas, goes into effect in lieu of part D NSR when an area is redesignated to attainment. This distinguishes NSR from other required programs under the Clean Air Act, such as inspection and maintenance programs, which have no corollary for attainment areas. Moreover, EPA believes that those other required programs are clearly within the scope of the term ''measure.''

EPA is not suggesting that NSR and PSD are equivalent, but merely that they are the same type of program. The PSD program is a requirement in attainment areas and is designed to allow new source permitting, yet contains adequate provisions to protect the NAAQS. If any information, including preconstruction monitoring, indicates that an area is not continuing to meet the NAAQS after redesignation to attainment, the requirements of 40 CFR part 51, appendix S (Interpretive Offset Rule) or

a 40 CFR 51.165(b) program would apply.

With respect to conformity, the requirements cited by the commenter do not apply to PM_{10} in these areas. As stated in EPA's conformity regulations, at 40 CFR 93.102(b), the conformity requirements apply in ''nonattainment and maintenance areas for transportation-related criteria pollutants'' [emphasis added}. Within that section of the conformity regulations, 40 CFR 93.102(b)(2)(iii) specifies that conformity requirements apply ''in PM_{10} areas [only] if the EPA Regional Administrator or the director of the State air agency has made a finding that transportation-related precursor emissions within the nonattainment area are a significant contributor to the PM_{10} nonattainment problem and has so notified the MPO and DOT, or if the applicable implementation plan (or implementation plan submission established a budget for such emissions as part of the reasonable further progress, attainment or maintenance strategy.''

Transportation-related emissions do not contribute significantly to PM_{10} concentrations in Cuyahoga and Jefferson Counties. Stationary sources are the predominant contributors to high concentrations in these areas. The attainment demonstration that EPA approved for these areas on June 12, 1996, at 61 FR 29662, documents this finding, and documents that mobile sources contribute only a few micrograms per cubic meter to airborne concentrations, i.e. only a few percent of the air quality standards. EPA and the Ohio Environmental Protection Agency agreed during the 1994 conformity consultation process that transportation sources are insignificant contributors to the nonattainment problem in Cuyahoga County and the Steubenville area. As appropriate, the SIP does not establish a budget for these emissions. EPA approved conformity rules for Ohio on May 16, 1996 (61 FR 24702) and May 30, 2000 (65 FR 34395). In accordance with applicable EPA regulations, conformity requirements under the state's rules do not apply to PM_{10} in Cuyahoga or Jefferson Counties. Rules establishing such requirements and approval of an emissions budget are not prerequisites for full SIP approval or redesignation.

Furthermore, EPA believes it is reasonable to interpret the conformity requirements as not applying for purposes of evaluating a redesignation request under section 107(d). The rationale for this interpretation has been set forth in a number of notices redesignating areas to attainment for ozone. See, for example, the Cincinnati-Hamilton redesignation at 65 FR 37879 (June 19, 2000), the Grand Rapids redesignation at 61 FR 31835–31836 (June 21, 1996), and the Cleveland-Akron-Lorain redesignation at 61 FR 20458 (May 7, 1996).

3. Permanent and Enforceable Reductions

Comment: The commenter believes that Section 107(d)(3)(E)(iii) requires that EPA or the State conduct modeling to demonstrate that air quality improvements are attributable to permanent and enforceable emission reductions rather than weather patterns, reduction in production, or other factors.

Response: When Ohio developed its attainment plan, it began by modeling existing emissions, to identify where existing air quality was problematic. This modeling identified problems consistent with the nonattainment problems identified at that time by monitoring. Ohio then conducted numerous model runs to assess alternative control strategies. The final modeling analysis demonstrated that the permanent and enforceable emission reductions which were added as requirements in the attainment plan regulations were sufficient to bring PM_{10} concentrations down to attainment levels. Since this modeling reflected emissions at allowable levels assuming full capacity plant operations, attainment is not dependent on reduced production or other transient factors. While EPA does not concede that modeling must be done to demonstrate that air quality improvements are due to permanent and enforceable reductions, in this case the type of modeling requested by the commenter was in fact done. This modeling demonstrated that the air quality improvement is due to permanent and enforceable reductions.

4. Maintenance

Due to the length and variety of comments on Ohio's maintenance plan, these comments are addressed in three parts.

Comment: The commenter states that Ohio has failed to submit a SIP revision that provides for maintenance. The commenter observes that Ohio ''has merely submitted a letter asserting that the standard will be maintained. There is no SIP revision comprising the maintenance plan, and no commitment to implement or continue control strategies necessary for maintenance.'' The commenter further believes that ''neither the state nor EPA has demonstrated that the standard will in fact be maintained for [the necessary] ten years''.

The commenter acknowledges that ''EPA presumes'' that declining population, cleaner new vehicles, and recent regulations on coke oven emissions will maintain the standards by keeping emissions at or below levels found in the SIP to assure attainment. However, the commenter states that Cuyahoga County ''violated the [air quality standards] in 1995, again in 1999, and again in 2000,'' demonstrating that ''holding emissions to those assumed in the attainment plan most certainly does not assure attainment.'' The commenter believes that the above ''indicators'' have not been shown to be good indicators of regional emissions, and observes that ''other factors—*e.g.,* increased production, construction of new pollution sources, increased per capita vehicle ownership—[may] cause emissions to rise.'' The commenter cites EPA rules as requiring modeling to demonstrate maintenance, ''rather than the intuitive approach proposed here,'' and states that without ''such a modeling demonstration, [EPA] cannot approve maintenance demonstrations for these areas.''

Response: A maintenance plan must provide sufficient assurances that attainment of the air quality standard will continue for at least 10 years after the area is redesignated to attainment. A maintenance plan is not required to add to the set of enforceable emission limitations in the SIP. If the State can show that the air quality standard will be maintained without any additional measures beyond those that are already part of the SIP, then the maintenance plan need not add any additional measures. Also, if the maintenance plan relies in part on a previously submitted attainment demonstration, then the State need not resubmit that attainment demonstration.

Ohio's maintenance plan is in fact based on its previously submitted attainment demonstration, which EPA approved on June 12, 1996, at 61 FR 29662. This analysis assesses the sum of the impacts of significant industrial sources at their maximum allowable emissions plus other, background sources at actual emission levels. Ohio demonstrated that the sum of these impacts is concentrations below the standard.

Emissions from the significant sources will be maintained at or below maximum allowable levels. Therefore, Ohio can demonstrate maintenance simply by demonstrating that background impacts will remain at or below current levels.

Maintenance planning for PM_{10} differs from maintenance planning for ozone in this respect. Attainment plans for PM_{10} for areas like Cuyahoga and Jefferson Counties must demonstrate that attainment will occur even if sources emit their maximum allowable amount. As a result, attainment and maintenance do not depend on maintaining preexisting levels of production by facilities in the area. Since the modeled industrial sources in the area are the principal contributors to high PM_{10} levels in these counties, the maintenance plan will consist principally of the limits on these industrial sources provided in the attainment plan. The only remaining question pertains to future background concentrations. If the State can demonstrate that background concentrations will decline over the next ten years, then the maintenance demonstration will consist of that demonstration in conjunction with the previously approved attainment demonstration, and the maintenance plan's control measures will consist of the control measures in the attainment plan.

Ozone maintenance plans are different because ozone attainment plans address actual production levels. This means first that ozone maintenance plans must project any increases or decreases in future production. Such projections must consider all significant source types, and cannot be restricted to addressing background contributors. Thus, maintenance plans for PM_{10} for areas like Cuyahoga and Jefferson County are considerably less complicated and have much less potential to require additional controls than maintenance plans for ozone.

The commenter expressed concern that the ''indicators'' that Ohio cites are not indicative of regional PM_{10} emissions. In fact, Ohio should not be seeking to indicate trends in regional emissions. Ohio is properly relying on existing SIP limits to address the most significant regional emissions, and focusing its additional trend analyses on sources affecting ''background'' concentrations. Ohio need not address increased production at important industrial facilities, because all increases up to maximum production are already accommodated in the attainment/maintenance demonstration. Ohio need not address construction of new pollution sources, because PSD regulations require any significant new source to demonstrate that its emissions will not cause violations of the standards. Ohio needs to address increased vehicle ownership, but only as part of an assessment of trends in background concentrations.

Despite the relative insignificance of motor vehicle emissions, EPA has examined detailed assessments pertinent to motor vehicle emissions in Cuyahoga County. Ohio submitted extensive detail on current and projected traffic volumes in the Cleveland area as part of its maintenance plan for this area for ozone. Between 1996 and 2010, traffic volumes are projected to increase by less than one percent per year. Most of this growth is occurring in the outer counties of the area; Cuyahoga County traffic is projected to grow by less than ⅓ percent per year. Meanwhile, emissions per vehicle are declining as a result of previous regulations plus the tighter fuel and emission standards of the Tier 2 rules discussed below. Between now and 2010, emissions per vehicle are expected to decline an average of 2.5 percent per year, not including the significant emission reductions that will result from the Tier 2 rules. The net projected effect is a significant decline in motor vehicle emissions in Cuyahoga County over the next ten years. Similar information indicates a less than one percent traffic growth rate in the Steubenville area as well, so this area too will likely witness declining motor vehicle emissions.

EPA believes that Ohio has addressed important elements of the background concentrations. EPA believes that the net reduction in motor vehicle emissions plus the reduction in other emissions associated with population will yield a net decline in background concentrations. According to the attainment demonstration that EPA has approved, these background concentrations in combination with maximum allowable impacts from significant sources add up to concentrations below the standard. Consequently, EPA believes that Ohio's maintenance plan provides for maintenance of the PM_{10} standards.

Ohio does not explicitly address whether maintenance is assured for 10 years. However, Ohio's approved attainment demonstration shows that the standard will be maintained, principally due to permanent emission limits on significant sources, so long as background emissions remain at or below current levels. Ohio provided evidence that background emissions will remain at or below current levels throughout the next 10 years. Consequently, EPA is satisfied that Ohio has assured maintenance for the requisite 10 years.

Comment: The commenter cites results of an EPA analysis conducted in conjunction with adoption of Tier 2 motor vehicle emission standards, discussed in the **Federal Register** of February 10, 2000 (65 FR 6698 and 6719). The commenter states that ''EPA identified Cuyahoga County as an area with a 'significant risk of failing to attain and maintain the PM10 [air quality standards] without further reductions in emissions.''' The commenter acknowledges future reductions from the Tier 2 standards but states that ''EPA has not shown that these reductions will be sufficient or will occur soon enough to prevent NAAQS violations'' throughout the next 10 years.

Response: In preparation for adopting its Tier 2 motor vehicle emission standards, EPA attempted a national analysis of prospective attainment with and without these standards. EPA identified eight areas as areas of ''high risk of failing to attain or maintain the PM_{10} NAAQS''. These areas had monitored violations in 1996 to 1998 and were projected to have continued violations in 2030 without the Tier 2 standards. These areas were all in California or neighboring States. EPA then identified five additional counties, including Cuyahoga County, as having a risk of future violations of the PM_{10} NAAQS. These counties were defined as attaining the NAAQS based on 1996 to 1998 data but projected to violate the standards in 2030 in the absence of Tier 2 regulations. The rulemaking cited by the commenter states, ''There is a substantial risk that at least some of [these latter five counties] would fail to maintain without further emission reductions. The emission reductions from the Tier 2/Gasoline Sulfur program will help to keep them in 40 attainment.'' EPA in fact adopted the Tier 2 regulations, so projections of possible future nonattainment without these regulations are irrelevant. Contrary to the commenter's statements, EPA's analysis for the relevant scenario (with Tier 2 standards) shows continued maintenance. In addition, a projection that vehicle emissions without Tier 2 standards could reach levels sufficient to help cause violations by 2030 does not necessarily mean that violations would occur by 2010, the timeframe that is germane here. In any case, the Tier 2 rulemaking notes that ''[a]fter reviewing public comments on our presentation of these modeling results, [EPA] concluded that [its analysis is] suitable for estimating PM concentration reductions for economic benefits estimation, [but] it is not a tool we can use with high confidence for predicting that individual areas that are now in

attainment will become nonattainment in the future.'' Thus the most relevant analysis is Ohio's attainment modeling and maintenance plan information, which considers local data on the significance of motor vehicle emissions and on the population (and thus the number of drivers). This information, like the Tier 2 analysis, supports EPA's conclusion that Cuyahoga County will maintain the PM_{10} NAAQS over the next ten years.

Comment: The commenter objects that what EPA calls a maintenance plan ''lacks enforcement programs and commitments of resources'' as well as ''legal authority.'' In addition, the commenter states that PM_{10} motor vehicle emissions budget is ''required not only for purposes of the attainment plan, but also for a maintenance plan as well.'' Finally, the commenter states that ''the state lacks adequate contingency plans for maintenance'' pursuant to Section 175A(d). The commenter acknowledges that Ohio has contingency measures ''designed to produce limited annual progress toward attainment in the event of a shortfall,'' but the commenter believes that these measures fail to meet a different requirement applicable to maintenance plans ''to assure that the State will promptly correct any violation of the standard.''

Response: The requirements under Section 110(a)(2)(E) that the commenter cites were addressed in general by Ohio in its initial SIP, submitted on January 31, 1972, and ultimately approved on April 15, 1974 (39 FR 13539). EPA's conclusion in that rulemaking remains valid, that Ohio's enforcement program, commitment of resources, and legal authority are adequate and assure that measures in the SIP (including maintenance plan measures) will be implemented. See Calcagni Memorandum cited above and Southwestern Pennsylvania Growth Alliance v. Browner, 144 F.3d 984 (6th Cir. 1998). See also discussion in Cincinnati-Hamilton redesignation notice at 65 FR 37882. If EPA were to find that SIP measures were not being implemented, for lack of the above or for any other reason, the process leading to sanctions under Section 179(a)(4) would commence.

A response above clarifies that motor vehicle emission budgets are not required for PM_{10} in areas where motor vehicles do not contribute significantly to PM_{10} nonattainment. Thus, neither the attainment plans nor the maintenance plans for Cuyahoga and Jefferson Counties need to have a motor vehicle emissions budget.

The commenter acknowledges that the Ohio SIP includes contingency measures. These measures, approved on May 6, 1996 (61 FR 20142), are triggered on the basis of air quality monitoring data irrespective of attainment status. That is, these measures are valid maintenance plan contingency measures because they take effect if violations recur for any reason after redesignation of the areas to attainment. The question of interest here, then, is whether these contingency measures are adequate to satisfy Section 175A(d).

The commenter's quote from Section 175A(d) omits a key qualifier that invokes EPA's judgment in assessing contingency measure adequacy for maintenance plan purposes. The full sentence in Section 175A(d) reads: ''Each plan revision submitted under this section shall contain such contingency provisions as the Administrator deems necessary [emphasis added] to assure that the State will promptly correct any violation of the standard which occurs after the redesignation of the area as an attainment area.'' Section 175A(d) does not dictate that the maintenance plan contingency measures be sufficient by themselves to correct any violation of the standard. Instead, these measures need only be sufficient in EPA's judgment to help assure that the State will promptly correct any future violation.

A variety of sources emit PM_{10}, so nonattainment can occur for a variety of reasons. EPA cannot reasonably expect maintenance plan contingency measures by themselves to address all possible future violations. Instead, EPA must judge the contingency measures in the context of the types of future violations that it views as most likely and in the context of other factors which help assure that the State will correct any future violations.

Additional factors that help assure prompt correction of any future PM_{10} violation in Cuyahoga County or the Steubenville area include provisions in Ohio's regulations that allow the State to impose additional source controls if violations occur and provisions in the Clean Air Act Section 110(h) (provisions for SIP Calls). EPA is satisfied that the contingency measures that are included in Ohio's maintenance plan for Cuyahoga and Jefferson Counties, in combination with other factors, assure that Ohio will promptly correct any future violations in these areas.

III. What Actions Is EPA Taking, and Why?

EPA is redesignating Cuyahoga and Jefferson Counties in Ohio to attainment for PM_{10} and is approving Ohio's PM_{10} maintenance plan for these counties. The redesignation action reflects EPA's judgment of Ohio's request, focusing on the five criteria given in Clean Air Act Section 107(d)(3)(E) for redesignations from nonattainment to attainment.

The first criterion is that the areas are in fact attaining the standards. The standards in question are the PM_{10} standards given in 40 CFR 50.6, promulgated in 1987. Although EPA promulgated new standards for PM_{10} into 40 CFR 50.7, these new standards have been vacated by the District of Columbia Circuit Court of Appeals, no designations have been promulgated for these new standards, and this rule addresses only the older standards.

No concentrations exceeding the applicable standards have been recorded in Jefferson County or in most of Cuyahoga County. Exceedances occurred at two sites in Cleveland. One site was found to have 2 exceedances of the 24-hour standard over 3 years, which was found to translate to 0.7 expected exceedances per year. EPA proposed this finding, no commenter challenged this finding, and EPA now concludes that the standard is being attained at this site. A second site observed 1 exceedance of the 24-hour standard in 1997 to 1999, which was found to translate to 0.3 expected exceedances per year. A commenter challenged this view, noting that EPA's AIRS database indicates 6 expected exceedances in 1999 as well as 6 expected exceedances in 2000. As discussed above in response to comments, EPA finds that the more sophisticated methods of data interpretation described in the proposed rulemaking give a better assessment of expected exceedances at this site. These methods indicate that the site had approximately one expected exceedance for 1999. A similar assessment of the data so far in 2000 also indicate approximately one expected exceedance. While it is problematic to average in data for only half of 2000, these data support a conclusion that expected exceedances averaged over 3 years is less than 1.0. Consequently, EPA finds that these two sites, as well as the rest of Cuyahoga County, are attaining the applicable PM_{10} standards.

As noted in the proposed rulemaking, Jefferson County is part of a two-state area that also includes a portion of Brooke County, West Virginia. Satisfaction of the attainment criterion requires that air quality throughout this two-state Steubenville area be attaining the standards. The West Virginia portion of this area has one monitor, which has shown no recent

exceedances. Thus, this criterion is met because the entire Steubenville area is attaining the standards.

The second criterion is that EPA has fully approved the applicable implementation plan for the areas. The most recent approval, including approval of Ohio's attainment demonstrations, was published on June 12, 1996, at 61 FR 29662. Other applicable plan elements were approved on prior occasions. EPA does not require full approval of new source review rules or conformity as a prerequisite for redesignation, and, moreover, the conformity regulations do not apply to these areas for PM_{10}. While approval of the SIP for the West Virginia portion of the Steubenville area was published separately, both SIPs have been approved on the basis of the same, jointly developed attainment strategy.

The third criterion is that the air quality improvement be due to permanent and enforceable reductions. EPA finds that air quality has significantly improved as a result of emission reductions that limits in the SIP make permanent and enforceable.

The fourth criterion is that EPA has fully approved a maintenance plan. This rule approves Ohio's maintenance plan for Cuyahoga and Jefferson Counties. Ohio held a public hearing on its maintenance plan and otherwise satisfied the procedural requirements for adopting and submitting this plan. The most important part of this plan is the continuation of SIP emission limits on major industrial sources which have been shown by modeling to assure attainment even if the sources operate at maximum capacity. Additional factors will assure that the remaining, background concentrations will remain at attainment levels, including ongoing plus forthcoming mobile source control requirements as well as population declines in the two areas. Although a commenter expressed numerous concerns about Ohio's maintenance plans, the review of those concerns discussed in the previous section lead EPA to conclude that the maintenance plans fully meet applicable requirements. With today's approval of Ohio's maintenance plans, the fourth criterion for redesignation of the two counties is satisfied.

The fifth criterion for redesignation is that the State has met all requirements under Section 110 and Part D of the Clean Air Act that apply to the areas. This criterion is similar to the second criterion, and EPA finds that Ohio has met all relevant requirements.

For the Steubenville area, EPA is taking action today only on the Ohio portion of this area. This approach is for administrative convenience and in no way signifies any splitting of the area into separate air quality planning areas. EPA's action today reflects a review of the air quality for the full Steubenville area as well as Ohio's fulfillment of its portion of an attainment plan that Ohio and West Virginia jointly developed. EPA has received no redesignation request for the West Virginia portion of the Steubenville area. EPA anticipates receiving and rulemaking on such a request in the near future. If in the future the standard is violated in either portion of the area, such that redesignation back to nonattainment is warranted, EPA will reinstate nonattainment status for the entire area.

IV. Administrative Requirements

A. Executive Order 12866

The Office of Management and Budget (OMB) has exempted this regulatory action from Executive Order 12866, entitled ''Regulatory Planning and Review.''

B. Executive Order 13045

Protection of Children from Environmental Health Risks and Safety Risks (62 FR 19885, April 23, 1997), applies to any rule that: (1) Is determined to be ''economically significant'' as defined under Executive Order 12866, and (2) concerns an environmental health or safety risk that EPA has reason to believe may have a disproportionate effect on children. If the regulatory action meets both criteria, the Agency must evaluate the environmental health or safety effects of the planned rule on children, and explain why the planned regulation is preferable to other potentially effective and reasonably feasible alternatives considered by the Agency.

This rule is not subject to Executive Order 13045 because it does not involve decisions intended to mitigate environmental health or safety risks that may have disproportionate effects on children.

C. Executive Order 13084

Under Executive Order 13084, EPA may not issue a regulation that is not required by statute, that significantly affects or uniquely affects the communities of Indian tribal governments, and that imposes substantial direct compliance costs on those communities, unless the Federal government provides the funds necessary to pay the direct compliance costs incurred by the tribal governments, or EPA consults with those governments. If EPA complies by consulting, Executive Order 13084 requires EPA to provide to the Office of Management and Budget, in a separately identified section of the preamble to the rule, a description of the extent of EPA's prior consultation with representatives of affected tribal governments, a summary of the nature of their concerns, and a statement supporting the need to issue the regulation. In addition, Executive Order 13084 requires EPA to develop an effective process permitting elected officials and other representatives of Indian tribal governments ''to provide meaningful and timely input in the development of regulatory policies on matters that significantly or uniquely affect their communities.''

Today's rule does not significantly or uniquely affect the communities of Indian tribal governments. This action does not involve or impose any requirements that affect Indian Tribes. Accordingly, the requirements of section 3(b) of Executive Order 13084 do not apply to this rule.

D. Executive Order 13132

Federalism (64 FR 43255, August 10, 1999) revokes and replaces Executive Orders 12612 (Federalism) and 12875 (Enhancing the Intergovernmental Partnership). Executive Order 13132 requires EPA to develop an accountable process to ensure ''meaningful and timely input by State and local officials in the development of regulatory policies that have federalism implications.'' ''Policies that have federalism implications'' is defined in the Executive Order to include regulations that have ''substantial direct effects on the States, on the relationship between the national government and the States, or on the distribution of power and responsibilities among the various levels of government.'' Under Executive Order 13132, EPA may not issue a regulation that has federalism implications, that imposes substantial direct compliance costs, and that is not required by statute, unless the Federal government provides the funds necessary to pay the direct compliance costs incurred by State and local governments, or EPA consults with State and local officials early in the process of developing the proposed regulation. EPA also may not issue a regulation that has federalism implications and that preempts State law unless the Agency consults with State and local officials early in the process of developing the proposed regulation.

This rule will not have substantial direct effects on the States, on the relationship between the national government and the States, or on the

distribution of power and responsibilities among the various levels of government, as specified in Executive Order 13132, because it merely affects the status of a geographical area, does not impose any new requirements on sources, or allows a state to avoid adopting or implementing other requirements, and does not alter the relationship or the distribution of power and responsibilities established in the Clean Air Act. Thus, the requirements of section 6 of the Executive Order do not apply to this rule.

E. Executive Order 12898

Executive Order 12898 (59 FR 7629, February 16, 1994) instructs EPA to address, as appropriate, disproportionately high and adverse health or environmental effects on minority and low-income populations. EPA has found that this rulemaking is consistent with Executive Order 12898 and does not impose any disproportionately high and adverse human health or environmental effects on minority and low-income populations.

F. Regulatory Flexibility

The Regulatory Flexibility Act (RFA) generally requires an agency to conduct a regulatory flexibility analysis of any rule subject to notice and comment rulemaking requirements unless the agency certifies that the rule will not have a significant economic impact on a substantial number of small entities. Small entities include small businesses, small not-for-profit enterprises, and small governmental jurisdictions.

This rule will not have a significant impact on a substantial number of small entities because SIP approvals under section 110 and subchapter I, part D of the Clean Air Act do not create any new requirements but simply approve requirements that the State is already imposing. In addition, redesignation of an area to attainment under section 107(d)(3)(E) of the Clean Air Act does not impose any new requirements on small entities. Redesignation is an action that affects the status of a geographical area and does not impose any new requlatory requirements on sources. Therefore, because the Federal SIP approval does not create any new requirements, I certify that this action will not have a significant economic impact on a substantial number of small entities. Moreover, due to the nature of the Federal-State relationship under the Clean Air Act, preparation of flexibility analysis would constitute Federal inquiry into the economic reasonableness of state action. The Clean Air Act forbids EPA to base its actions concerning SIPs on such grounds. *Union Electric Co.* v. *U.S. EPA,* 427 U.S. 246, 255–66 (1976); 42 U.S.C. 7410(a)(2).

G. Unfunded Mandates

Under sections 202 of the Unfunded Mandates Reform Act of 1995 (''Unfunded Mandates Act''), signed into law on March 22, 1995, EPA must prepare a budgetary impact statement to accompany any proposed or final rule that includes a Federal mandate that may result in estimated costs to State, local, or tribal governments in the aggregate; or to the private sector, of $100 million or more. Under section 205, EPA must select the most cost-effective and least burdensome alternative that achieves the objectives of the rule and is consistent with statutory requirements. Section 203 requires EPA to establish a plan for informing and advising any small governments that may be significantly or uniquely impacted by the rule.

EPA has determined that the approval action promulgated does not include a Federal mandate that may result in estimated costs of $100 million or more to either State, local, or tribal governments in the aggregate, or to the private sector. This Federal action approves pre-existing requirements under State or local law, and imposes no new requirements. Accordingly, no additional costs to State, local, or tribal governments, or to the private sector, result from this action.

H. Submission to Congress and the Comptroller General

The Congressional Review Act, 5 U.S.C. 801 *et seq.*, as added by the Small Business Regulatory Enforcement Fairness Act of 1996, generally provides that before a rule may take effect, the agency promulgating the rule must submit a rule report, which includes a copy of the rule, to each House of the Congress and to the Comptroller General of the United States. EPA will submit a report containing this rule and other required information to the U.S. Senate, the U.S. House of Representatives, and the Comptroller General of the United States prior to publication of the rule in the **Federal Register**. A major rule cannot take effect until 60 days after it is published in the **Federal Register**. This action is not a ''major rule'' as defined by 5 U.S.C. 804(2). This rule will be effective January 10, 2001.

I. National Technology Transfer and Advancement Act

Section 12 of the National Technology Transfer and Advancement Act (NTTAA) of 1995 requires Federal agencies to evaluate existing technical standards when developing a new regulation. To comply with NTTAA, EPA must consider and use ''voluntary consensus standards'' (VCS) if available and applicable when developing programs and policies unless doing so would be inconsistent with applicable law or otherwise impractical.

In reviewing SIP submissions, EPA's role is to approve state choices, provided that they meet the criteria of the Clean Air Act. In this context, and in the absence of a prior existing requirement for the State to use voluntary consensus standards (VCS), EPA has no authority to disapprove a SIP submission for failure to use VCS. It would thus be inconsistent with applicable law for EPA, when it reviews a SIP submission, to use VCS in place of a SIP submission that otherwise satisfies the provisions of the Clean Air Act. Redesignation is an action that affects the status of a geographical area but does not impose any new requirements on sources. Thus, the requirements of section 12(d) of the National Technology Transfer and Advancement Act of 1995 (15 U.S.C. 272 note) do not apply.

J. Petitions for Judicial Review

Under section 307(b)(1) of the Clean Air Act, petitions for judicial review of this action must be filed in the United States Court of Appeals for the appropriate circuit by February 9, 2001. Filing a petition for reconsideration by the Administrator of this final rule does not affect the finality of this rule for the purposes of judicial review nor does it extend the time within which a petition for judicial review may be filed, and shall not postpone the effectiveness of such rule or action. This action may not be challenged later in proceedings to enforce its requirements. (See section 307(b)(2).)

Nothing in this action should be construed as permitting or allowing or establishing a precedent for any future request for revision to any SIP. Each request for revision to any SIP shall be considered separately in light of specific technical, economic, and environmental factors and regulatory requirements.

List of Subjects

40 CFR Part 52

Environmental protection, Air pollution control, Particulate matter, Reporting and recordkeeping requirements.

40 CFR Part 81

Environmental protection, Air pollution control, National parks, Wilderness areas.

Dated: November 29, 2000.

Elissa Speizman,

Acting Regional Administrator, Region 5.

Chapter I, title 40 of the Code of Federal Regulations is amended as follows:

PART 52—[AMENDED]

1. The authority citation for part 52 continues to read as follows:

Authority: 42 U.S.C. 7401 *et seq.*

Subpart KK—Ohio

2. Section 52.1880 is amended by removing and reserving paragraph (d) and adding paragraph (j) to read as follows:

§ 52.1880 Control strategy: Particulate matter.

(j) Approval—EPA is approving the PM10 maintenance plan for Cuyahoga and Jefferson Counties that Ohio submitted on May 22, 2000, and July 13, 2000.

PART 81—[AMENDED]

1. The authority citation for part 81 continues to read as follows:

Authority: 42 U.S.C. 7401 *et seq.*

2. Section 81.336 is amended by revising the table ''Ohio—PM–10'' to read as follows:

§ 81.336 Ohio.

* * * * *

OHIO—PM–10

Designated Area	Designation		Classification	
	Date	Type	Date	Type
Cuyahoga County	1/10/01	Attainment.		
Jefferson County				
The area bounded by Market Street (State Route 43) from the West Virginia/Ohio border west to Sunset Blvd. (U.S. Route 22), Sunset Blvd. west to the Steubenville Township/Cross Creek Township boundary, the Township boundary south to the Steubenville Corporation limit, the corporation boundary east to State Route 7, State Route 7 South to the Steubenville Township/Wells Township boundary, the Township boundary Unclassifiable east to the West Virginia/Ohio border, and North on the border to Market Street	1/10/01	Attainment.		
Rest of State	11/15/90	Unclassifiable.		

* * * * *

[FR Doc. 00–31329 Filed 12–8–00; 8:45 am]

BILLING CODE 6560–50–U

FEDERAL COMMUNICATIONS COMMISSION

47 CFR Part 73

(DA 00–2713, MM Docket No. 94–29, RM–8416)

Radio Broadcasting Services; Willows and Dunnigans, California

AGENCY: Federal Communications Commission.

ACTION: Final rule: petition for reconsideration.

SUMMARY: This document denies the petition for reconsideration filed by Marysville Radio, Inc. and Roseville Radio, Inc., of our *Report and Order*, 60 FR 55332 (October 31, 1995) which substituted Channel 288B1 for Channel 288A and reallotted Channel 288B1 from Willows to Dunnigan, California and modified the license for Station KIQS–FM accordingly. The Commission determined that a new engineering study can not be relied upon and that the *Report and Order* properly compared the existing and proposed arrrangement of allotments under the FM Priorities. With this action, this proceeding is terminated.

FOR FURTHER INFORMATION CONTACT: Arthur D. Scrutchins, Mass Media Bureau, (202) 418–2180.

SUPPLEMENTARY INFORMATION: This is a synopsis of the Commission's Memorandum Opinion and Order, MM Docket No. 94–29, adopted November 22, 2000 and released December 1, 2000. The full text of this Commission decision is available for inspection and copying during normal business hours in the FCC Reference Information Center (Room CY–A257), at its headquarters, 445 12th Street, S.W. Washington, D.C.

The complete text of this decision may also be purchased from the Commission's copy contractors, International Transcription Service, Inc., (202) 857–3800, 1231 20th Street, N.W. Washington, D.C. 20036.

Federal Communications Commission.

John A. Karousos,

Chief, Allocations Branch, Policy and Rules Division, Mass Media Bureau.

[FR Doc. 00–31398 Filed 12–8–00; 8:45 am]

BILLING CODE 6712–01–P

FEDERAL COMMUNICATIONS COMMISSION

47 CFR Part 73

[DA 00–2711, MM Docket No. 99–58; RM–9461 RM–9611]

Radio Broadcasting Services; Strattanville and Farmington Township, PA

AGENCY: Federal Communications Commission.

ACTION: Final rule.

SUMMARY: The Commission, at the request of West Wind Broadcasting, allots Channel 267A at Strattanville, Pennsylvania, as the community's first local aural transmission service (RM–9461). *See* 64 FR 8782, February 23, 1999. At the request of Clarion County Broadcasting, Inc., we also allot Channel 291A at Farmington Township, Pennsylvania, as the community's first local aural transmission service (RM–9611). Channel 267A can be allotted at Strattanville in compliance with the Commission's minimum distance separation requirements with a site restriction of 15.1 kilometers (9.4 miles) northeast to avoid a short-spacing to the licensed site of Station WORD-FM, Channel 268B, Pittsburgh, Pennsylvania. The coordinates for

Channel 267A at Strattanville are 41–18–36 North Latitude and 79–13–05 West Longitude. *See* Supplementary Information, *infra.*

DATES: Effective January 15, 2001. A filing window , will not be opened at this time. Instead, the issue of opening filing windows for these channels will be addressed by the Commission in a subsequent order.

FOR FURTHER INFORMATION CONTACT: Sharon P. McDonald, Mass Media Bureau, (202) 418–2180.

SUPPLEMENTARY INFORMATION: This is a synopsis of the Commission's Report and Order, MM Docket No. 99–58, adopted November 22, 2000, and released December 1, 2000. The full text of this Commission decision is available for inspection and copying during normal business hours in the FCC Reference Information Center (Room CY-A257), 445 12th Street, SW., Washington, DC. The complete text of this decision may also be purchased from the Commission's copy contractors, International Transcription Service, Inc., (202) 857–3800, 1231 20th Street, NW., Washington, DC 20036.

Additionally, Channel 291A can be allotted to Farmington Township in compliance with the Commission's minimum distance separation requirements with a site restriction of 15.1 kilometers (9.4 miles) to avoid a short-spacing to the construction permit site of Station WMKX(FM), Channel 388B1, Brookville, Pennsylvania, and the licensed and construction permit sites of Station WCTL(FM), Channel 292A Union City, Pennsylvania. The coordinates for Channel 291A at Farmington Township are 41–30–54 North Latitude and 79–18–13 West Longitude. Since Strattanville is located within 320 kilometers (200) miles of the U.S.-Canadian border, Canadian concurrence for the allotment of Channel 267A at Strattanville has been obtained. However, concurrence for the allotment of Channel 292A at Farmington Township has been requested, but not yet received. Therefore, if a construction permit is granted to Farmington Township prior to the receipt of formal concurrence in the allotment by the Canadian government, the construction permit will include the following condition: ''Operation with the facilities specified herein is subject to modification, suspension or termination without right to a hearing, if found by the Commission to be necessary in order to conform to the USA-Canadian FM Broadcast Agreement.''

List of Subjects in 47 CFR Part 73

Radio broadcasting.

Part 73 of title 47 of the Code of Federal Regulations is amended as follows:

PART 73—RADIO BROADCAST SERVICES

1. The authority citation for part 73 continues to read as follows:

Authority: 47 U.S.C. 54, 303, 334, 336.

§ 73.202 [Amended]

2. Section 73.202(b), the Table of FM Allotments under Pennsylvania, is amended by adding Strattanville, Channel 267A; and by adding Farmington Township, Channel 291A.

Federal Communications Commission.

John A. Karousos,

Chief, Allocations Branch, Policy and Rules Division, Mass Media Bureau.

[FR Doc. 00–31399 Filed 12–8–00; 8:45 am]

BILLING CODE 6712–01–P

DEPARTMENT OF TRANSPORTATION

Surface Transportation Board

49 CFR Part 1002

[STB Ex Parte No. 542 (Sub–No. 5)]

Regulations Governing Fees for Services Performed in Connection With Licensing and Related Services—2000 Update

AGENCY: Surface Transportation Board.

ACTION: Final rules.

SUMMARY: The Board adopts its 2000 User Fee Update and revises its fee schedule at this time to recover the cost associated with the January 2000 Government salary increases plus increases to its **Federal Register** publication costs.

EFFECTIVE DATE: These rules are effective January 10, 2001.

FOR FURTHER INFORMATION CONTACT: David T. Groves, (202) 565–1551, or Anne Quinlan, (202) 565–1727. [TDD for the hearing impaired: (202) 565–1695.]

SUPPLEMENTARY INFORMATION: The Board's regulations in 49 CFR 1002.3 require the Board's user fee schedule to be updated annually. The Board's regulations in 49 CFR 1002.3(a) provide that the entire fee schedule or selected fees can be modified more than once a year, if necessary. The Board's fees are revised based on the cost study formula set forth at 49 CFR 1002.3(d). Also, in some previous years, selected fees were modified to reflect new cost study data or changes in Board or Interstate Commerce Commission fee policy.

Because Board employees received a salary increase of 4.94% in January 2000, we are updating our user fees to recover the increased personnel costs. We also are increasing the fees to take into account an approximate increase of 4.2% in our publication costs. With certain exceptions, all fees will be updated based on our cost formula contained in 49 CFR 1002.3(d).

The fee increases involved here result only from the mechanical application of the update formula in 49 CFR 1002.3(d), which was adopted through notice and comment procedures in *Regulations Governing Fees for Services—1987 Update,* 4 I.C.C.2d 137 (1987). In addition, no new fees are being proposed in this proceeding. Therefore, we believe notice and comment are unnecessary for this proceeding. *See Regulations Governing Fees for Services—1990 Update,* 7 I.C.C.2d 3 (1990); *Regulations Governing Fees for Services—1991 Update*, 8 I.C.C.2d 13 (1991); and *Regulations Governing Fees for Services—1993 Update*, 9 I.C.C.2d 855 (1993).

We conclude that the fee changes being adopted here will not have a significant economic impact on a substantial number of small entities because the Board's regulations provide for waiver of filing fees for those entities that can make the required showing of financial hardship.

Additional information is contained in the Board's decision. To obtain a copy of the full decision, write, call, or pick up in person from Da-to-Da Office Solutions, Suite 405, Surface Transportation Board, 1925 K Street, NW., Washington, DC 20423–0001. Telephone: (202) 466–5530. [Assistance for the hearing impaired is available through TDD services 1–800–877–8339.]

List of Subjects in 49 CFR Part 1002

Administrative practice and procedure, Common carriers, Freedom of information, User fees.

Decided: December 4, 2000.

By the Board, Chairman Morgan, Vice Chairman Burkes, and Commissioner Clyburn.

Vernon A. Williams,

Secretary.

For the reasons set forth in the preamble, title 49, chapter X, part 1002, of the Code of Federal Regulations is amended as follows:

PART 1002—FEES

1. The authority citation for part 1002 continues to read as follows:

Authority: 5 U.S.C. 552(a)(4)(A) and 553; 31 U.S.C. 9701 and 49 U.S.C. 721(a).

2. Section 1002.1 is amended by revising paragraphs (b), (c) and (e)(1) and the table in paragraph (f)(6) to read as follows:

§ 1002.1 Fees for records search, review, copying, certification, and related services.

* * * * *

(b) Service involved in examination of tariffs or schedules for preparation of certified copies of tariffs or schedules or extracts therefrom at the rate of $28.00 per hour.

(c) Service involved in checking records to be certified to determine authenticity, including clerical work, etc., incidental thereto, at the rate of $19.00 per hour.

* * * * *

(e) * * *

(1) A fee of $49.00 per hour for professional staff time will be charged when it is required to fulfill a request for ADP data.

* * * * *

(f) * * *

(6) * * *

Grade	Rate
GS–1	$8.21
GS–2	8.94
GS–3	10.08
GS–4	11.31
GS–5	12.65
GS–6	14.11
GS–7	15.67
GS–8	17.36
GS–9	19.17
GS–10	21.12
GS–11	23.20
GS–12	27.81
GS–13	33.07
GS–14	39.07
GS–15 and over	45.96

* * * * *

2. In § 1002.2, paragraph (f) is revised to read as follows:

§ 1002.2 Filing fees.

* * * * *

(f) *Schedule of filing fees.*

Type of proceeding	Fee
Part I: Non-Rail Applications or Proceedings to Enter Upon a Particular Financial Transaction or Joint Arrangement	
(1) An application for the pooling or division of traffic	$2,900
(2) An application involving the purchase, lease, consolidation, merger, or acquisition of control of a motor carrier of passengers under 49 U.S.C. 14303	1,400
(3) An application for approval of a non-rail rate association agreement. 49 U.S.C. 13703.	18,300
(4) An application for approval of an amendment to a non-rail rate association agreement:	
(i) Significant amendment	3,100.
(ii) Minor amendment	70.
(5) An application for temporary authority to operate a motor carrier of passengers. 49 U.S.C. 14303(i)	300
(6) A notice of exemption for transaction within a motor passenger corporate family that does not result in adverse changes in service levels, significant operational changes, or a change in the competitive balance with motor passenger carriers outside the corporate family	1,100
(7)–(10) [Reserved]	
Part II: Rail Licensing Proceedings other than Abandonment or Discontinuance Proceedings	
(11)(i) An application for a certificate authorizing the extension, acquisition, or operation of lines of railroad. 49 U.S.C. 10901	4,800
(ii) Notice of exemption under 49 CFR 1150.31–1150.35	1,200
(iii) Petition for exemption under 49 U.S.C. 10502	8,300
(12) (i) An application involving the construction of a rail line	49,300
(ii) A notice of exemption involving construction of a rail line under 49 CFR 1150.36	1,200
(iii) A petition for exemption under 49 U.S.C. 10502 involving construction of a rail line	49,300
(13) A Feeder Line Development Program application filed under 49 U.S.C. 10907(b)(1)(A)(i) or 10907(b)(1)(A)(ii)	2,600
(14) (i) An application of a class II or class III carrier to acquire an extended or additional rail line under 49 U.S.C. 10902	4,100
(ii) Notice of exemption under 49 CFR 1150.41–1150.45	1,200
(iii) Petition for exemption under 49 U.S.C. 10502 relating to an exemption from the provisions of 49 U.S.C. 10902	4,400
(15) A notice of a modified certificate of public convenience and necessity under 49 CFR 1150.21–1150.24	1,100
(16)–(20) [Reserved]	
Part III: Rail Abandonment or Discontinuance of Transportation Services Proceedings	
(21) (i) An application for authority to abandon all or a portion of a line of railroad or discontinue operation thereof filed by a railroad (except applications filed by Consolidated Rail Corporation pursuant to the Northeast Rail Service Act [Subtitle E of Title XI of Pub. L. 97–35], bankrupt railroads, or exempt abandonments)	14,600
(ii) Notice of an exempt abandonment or discontinuance under 49 CFR 1152.50	2,500
(iii) A petition for exemption under 49 U.S.C. 10502	4,200
(22) An application for authority to abandon all or a portion of a line of a railroad or operation thereof filed by Consolidated Rail Corporation pursuant to Northeast Rail Service Act	300
(23) Abandonments filed by bankrupt railroads	1,200
(24) A request for waiver of filing requirements for abandonment application proceedings	1,200
(25) An offer of financial assistance under 49 U.S.C. 10904 relating to the purchase of or subsidy for a rail line proposed for abandonment	1,000
(26) A request to set terms and conditions for the sale of or subsidy for a rail line proposed to be abandoned	14,900
(27) A request for a trail use condition in an abandonment proceeding under 16 U.S.C.1247(d)	150
(28)–(35) [Reserved]	
Part IV: Rail Applications to Enter Upon a Particular Financial Transaction or Joint Arrangement	
(36) An application for use of terminal facilities or other applications under 49 U.S.C. 11102	12,500
(37) An application for the pooling or division of traffic. 49 U.S.C. 11322	6,800

Type of proceeding	Fee
(38) An application for two or more carriers to consolidate or merge their properties or franchises (or a part thereof) into one corporation for ownership, management, and operation of the properties previously in separate ownership. 49 U.S.C. 11324:	
(i) Major transaction	$986,300
(ii) Significant transaction	197,200
(iii) Minor transaction	5,300
(iv) Notice of an exempt transaction under 49 CFR 118.02(d)	1,100
(v) Responsive application	5,300
(vi) Petition for exemption under 49 U.S.C. 10502	6,200
(39) An application of a non-carrier to acquire control of two or more carriers through ownership of stock or otherwise. 49 U.S.C. 11324:	
(i) Major transaction	986,300
(ii) Significant transaction	197,200
(iii) Minor transaction	5,300
(iv) A notice of an exempt transaction under 49 CFR 118.02(d)	950
(v) Responsive application	5,300
(vi) Petition for exemption under 49 U.S.C. 10502	6,200
(40) An application to acquire trackage rights over, joint ownership in, or joint use of any railroad lines owned and operated by any other carrier and terminals incidental thereto. 49 U.S.C. 11324:	
(i) Major transaction	986,300
(ii) Significant transaction	197,200
(iii) Minor transaction	5,300
(iv) Notice of an exempt transaction under 49 CFR 118.02(d)	850
(v) Responsive application	5,300
(vi) Petition for exemption under 49 U.S.C. 10502	6,200
(41) An application of a carrier or carriers to purchase, lease, or contract to operate the properties of another, or to acquire control of another by purchase of stock or otherwise. 49 U.S.C. 11324:	
(i) Major transaction	986,300
(ii) Significant transaction	197,200
(iii) Minor transaction	5,300
(iv) Notice of an exempt transaction under 49 CFR 118.02(d)	1,000
(v) Responsive application	5,300
(vi) Petition for exemption under 49 U.S.C. 10502	4,400
(42) Notice of a joint project involving relocation of a rail line under 49 CFR 1180.2(d)(5)	1,600
(43) An application for approval of a rail rate association agreement. 49 U.S.C. 10706	46,100
(44) An application for approval of an amendment to a rail rate association agreement. 49 U.S.C. 10706	
(i) Significant amendment	8,600.
(ii) Minor amendment	70
(45) An application for authority to hold a position as officer or director under 49 U.S.C. 11328	500
(46) A petition for exemption under 49 U.S.C. 10502 (other than a rulemaking) filed by rail carrier not otherwise covered	5,300
(47) National Railroad Passenger Corporation (Amtrak) conveyance proceeding under 45 U.S.C. 562	150
(48) National Railroad Passenger Corporation (Amtrak) compensation proceeding under Section 402(a) of the Rail Passenger Service Act	150
(49)–(55) [Reserved]	
Part V: Formal Proceedings	
(56) A formal complaint alleging unlawful rates or practices of carriers:	
(i) A formal complaint filed under the coal rate guidelines (Stand-Alone Cost Methodology) alleging unlawful rates and/or practices of rail carriers under 49 U.S.C. 10704(c)(1)	55,000
(ii) All other formal complaints (except competitive access complaints	5,400
(iii) Competitive access complaints	150
(57) A complaint seeking or a petition requesting institution of an investigation seeking the prescription or division of joint rates or charges. 49 U.S.C. 10705.	5,800
(58) A petition for declaratory order:	
(i) A petition for declaratory order involving a dispute over an existing rate or practice which is comparable to a complaint proceeding	1,000.
(ii) All other petitions for declaratory order	1,400
(59) An application for shipper antitrust immunity. 49 U.S.C. 10706(a)(5)(A)	4,700
(60) Labor arbitration proceedings	150
(61) Appeals to a Surface Transportation Board decision and petitions to revoke an exemption pursuant to 49 U.S.C. 10502(d)	150
(62) Motor carrier undercharge proceedings	150
(63)–(75) [Reserved]	
Part VI: Informal Proceedings	
(76) An application for authority to establish released value rates or ratings for motor carriers and freight forwarders of household goods under 49 U.S.C. 14706	800
(77) An application for special permission for short notice or the waiver of other tariff publishing requirements	80
(78) (i) The filing of tariffs, including supplements, or contract summaries (per page, $16 minimum charge)	1
(ii) Tariffs transmitted by fax (per page)	1
(79) Special docket applications from rail and water carriers:	
(i) Applications involving $25,000 or less	50
(ii) Applications involving over $25,000	100
(80) Informal complaint about rail rate applications	400

Type of proceeding	Fee
(81) Tariff reconciliation petitions from motor common carriers:	
(i) Petitions involving $25,000 or less	$50
(ii) Petitions involving over $25,000	100
(82) Request for a determination of the applicability or reasonableness of motor carrier rates under 49 U.S.C. 13710(a)(2) and (3)	150
(83) Filing of documents for recordation. 49 U.S.C. 11301 and 49 CFR 1177.3(c) (per document)	27
(84) Informal opinions about rate applications (all modes)	150
(85) A railroad accounting interpretation	750
(86) An operational interpretation	950
(87) Arbitration of Certain Disputes Subject to the Statutory Jurisdiction of the Surface Transportation Board under 49 CFR 1108:	
(i) Complaint	75
(ii) Answer (per defendant), Unless Declining to Submit to Any Arbitration	75
(iii) Third Party Complaint	75
(iv) Third Party Answer (per defendant), Unless Declining to Submit to Any Arbitration	75
(v) Appeals of Arbitration Decisions or Petitions to Modify or Vacate an Arbitration Award	150
(88)–(95) [Reserved]	
Part VII: Service	
(96) Messenger delivery of decision to a railroad carrier's Washington, DC, agent (per delivery)	21
(97) Request for service or pleading list for proceedings (per list)	16
(98) (i) Processing the paperwork related to a request for the Carload Waybill Sample to be used in a Surface Transportation Board or State proceeding that does not require a FEDERAL REGISTER notice	200
(ii) Processing the paperwork related to a request for Carload Waybill Sample to be used for reasons other than a Surface Transportation Board or State proceeding that requires a FEDERAL REGISTER notice	450
(99) (i) Application fee for the Surface Transportation Board's Practitioners' Exam	100
(ii) Practitioners' Exam Information Package	25
(100) Uniform Railroad Costing System (URCS) software and information:	
(i) Initial PC version URCS Phase III software program and manual	50
(ii) Updated URCS PC version Phase III cost file, if computer disk provided by requestor	10
(iii) Updated URCS PC version Phase III cost file, if computer disk provided by the Board	20
(iv) Public requests for *Source Codes* to the PC version URCS Phase III	500
(v) PC version or mainframe version URCS Phase II	400
(vi) PC version or mainframe version Updated Phase II databases	50
(vii) Public requests for *Source Codes* to PC version URCS Phase II	1,500
(101) Carload Waybill Sample data on recordable compact disk (R–CD):	
(i) Requests for Public Use File on R–CD—First Year	450
(ii) Requests for Public Use File on R–CD Each Additional Year	150
(iii) Waybill—Surface Transportation Board or State proceedings on R–CD—First Year	650
(iv) Waybill—Surface Transportation Board or State proceedings on R–CD—Second Year on same R–CD	450
(v) Waybill—Surface Transportation Board of State proceeding on R–CD—Second Year on different R–CD	500
(vi) User Guide for latest available Carload Waybill Sample	50

* * * * *

[FR Doc. 00–31344 Filed 12–8–00; 8:45 am]

BILLING CODE 4915–00–P

Proposed Rules

Federal Register
Vol. 65, No. 238
Monday, December 11, 2000

This section of the FEDERAL REGISTER contains notices to the public of the proposed issuance of rules and regulations. The purpose of these notices is to give interested persons an opportunity to participate in the rule making prior to the adoption of the final rules.

DEPARTMENT OF AGRICULTURE

Agricultural Marketing Service

7 CFR Part 930

[Docket Nos. AO–370–A6; FV98–930–2]

Tart Cherries Grown in the States of Michigan, New York, Pennsylvania, Oregon, Utah, Washington, and Wisconsin; Secretary's Decision and Referendum Order on Proposed Amendment of Marketing Agreement and Order No. 930

AGENCY: Agricultural Marketing Service, USDA.

ACTION: Proposed rule and referendum order.

SUMMARY: This decision proposes amendments to the marketing agreement and order (order) for tart cherries and provides growers and processors with the opportunity to vote in a referendum to determine if they favor the proposed amendments. The proposed amendments were submitted by the Cherry Industry Administrative Board (Board), which is responsible for local administration of the order. One amendment would clarify the current limitation on the number of Board members that may be from, or affiliated with, a single ''sales constituency'' by amending the definition of that term. Another would simplify the method used to establish volume regulations for tart cherries. The proposed changes are intended to improve the operation and functioning of the tart cherry marketing order program.

DATES: The referendum shall be conducted from January 15 through January 26, 2001. The representative period for the purpose of the referendum herein ordered is June 1, 1999, through May 31, 2000.

FOR FURTHER INFORMATION CONTACT: Anne M. Dec, Marketing Specialist, Marketing Order Administration Branch, Fruit and Vegetable Programs, AMS, USDA, room 2525–S, Washington, DC 20250–0200; telephone: (202) 720–2491, or Fax: (202) 720–5698.

Small businesses may request information on compliance with this regulation by contacting Jay Guerber, Marketing Order Administration Branch, Fruit and Vegetable Programs, AMS, USDA, P.O. Box 96456, room 2525–S, Washington, DC 20090–6456; telephone (202) 720–2491; Fax (202) 720–5698.

SUPPLEMENTARY INFORMATION: Prior documents in this proceeding: Notice of Hearing issued on November 12, 1998, and published in the November 17, 1998, issue of the **Federal Register** (63 FR 63803). Recommended Decision and Opportunity to File Written Exceptions issued on December 29, 1999, and published in the **Federal Register** on January 5, 2000 (65 FR 672).

This administrative action is governed by the provisions of sections 556 and 557 of Title 5 of the United States Code and, therefore, is excluded from the requirements of Executive Order 12866.

Preliminary Statement

The proposed amendments were formulated on the record of a public hearing held in Grand Rapids, Michigan on December 1, 1998, and in Salt Lake City, Utah on December 3, 1998. The hearing was held to consider the proposed amendment of Marketing Agreement and Order No. 930, regulating the handling of tart cherries grown in the States of Michigan, New York, Pennsylvania, Oregon, Utah, Washington, and Wisconsin, hereinafter referred to collectively as the ''order.'' The hearing was held pursuant to the provisions of the Agricultural Marketing Agreement Act of 1937, as amended (7 U.S.C. 601 *et seq.*), hereinafter referred to as the Act, and the applicable rules of practice and procedure governing proceedings to formulate marketing agreements and marketing orders (7 CFR part 900). The Notice of Hearing contained amendment proposals submitted by the Board and the U.S. Department of Agriculture.

The Board proposed two amendments. One would amend the current order provision which defines the term ''sales constituency'' in order to clarify the intent of the Board membership limitation regarding sales constituency affiliation. The second would simplify the method used to establish volume regulations for tart cherries.

Also, the Fruit and Vegetable Programs of the Agricultural Marketing Service (AMS), U.S. Department of Agriculture, proposed to adopt such changes as may be necessary to the order, if either or both of the above amendments are adopted, so that all of its provisions conform with the proposed amendment. No conforming changes have been deemed necessary.

Upon the basis of evidence introduced at the hearing and the record thereof, the Administrator of the Agricultural Marketing Service (AMS) on December 29, 1999, filed with the Hearing Clerk, U.S. Department of Agriculture, a Recommended Decision and Opportunity to File Written Exceptions thereto by February 4, 2000.

Five exceptions and briefs were filed during the period provided regarding the two proposed revisions to the order. Two of those supported the conclusions reached in the Recommended Decision concerning the proposed revision of the definition of ''sales constituency''—those filed by the Board and by James R. Jensen, President, CherrCo, Inc. Three were opposed to that amendment—those filed by Timothy O. Brian, Smeltzer Orchard Co.; Terry Dorsing, President, Washington Tart Cherry Products, Inc.; and Lee Schrepel, Chair, Oregon Tart Cherry Association. With regard to the second amendment, the proposed revision of the optimum supply formula, the Board supported and Mr. Dorsing did not object to this amendment.

The specific issues raised in the exceptions are discussed in the Small Business Considerations and Findings and Conclusions sections of this document.

Small Business Considerations

Pursuant to the requirements set forth in the Regulatory Flexibility Act (RFA), the AMS has considered the economic impact of this action on small entities. Accordingly, the AMS has prepared this final regulatory flexibility analysis.

The purpose of the RFA is to fit regulatory actions to the scale of business subject to such actions so that small businesses will not be unduly or disproportionately burdened. Small agricultural producers have been defined by the Small Business Administration (SBA) (13 CFR 121.201) as those having annual receipts of less

than $500,000. Small agricultural service firms, which include handlers regulated under the order, are defined as those with annual receipts of less than $5,000,000. Interested persons were invited to present evidence at the hearing on the probable regulatory and informational impact of the proposed amendments on small businesses.

The record indicates that during the 1998–99 crop year, approximately 41 handlers were regulated under Marketing Order No. 930. In addition, there were about 896 producers of tart cherries in the production area. Marketing orders and amendments thereto are unique in that they are normally brought about through group action of essentially small entities for their own benefit. Thus, both the RFA and the Act are compatible with respect to small entities.

The 1998–99 tart cherry crop was about 340 million pounds. The record indicates that of the 41 tart cherry handlers, 12 had processed tonnage of more than 10 million pounds (or 29 percent of all handlers); 4 had between 5 and 10 million pounds (10 percent); 15 had between 1 and 5 million pounds (37 percent); and the remaining 10 had less than 1 million pounds of processed tonnage (24 percent). Handlers accounting for 10 million pounds or more would be classified as large businesses. Thus, a majority of tart cherry handlers could be classified as small entities. The majority of tart cherry processors are located in Michigan. Many handle cherries grown in more than one district. Michigan accounted for 76.4 percent of the production, followed by Utah with 9.6 percent, Wisconsin with 4.3 percent, Washington with 4.0 percent, New York with 3.9 percent, Pennsylvania with 1.2 percent, and Oregon with 0.6 percent. By State, about 72.5 percent of the growers are in Michigan, 9.9 percent in New York, 5.3 percent in Utah, 4.5 percent in Wisconsin, 3.6 percent in Pennsylvania, 2.5 percent in Oregon, and 1.7 percent in Washington.

Dividing total production by the number of growers, the average grower produces about 380,000 pounds of cherries annually. With grower returns of about 20 cents per pound, average revenues would be $76,000. Thus, it is reasonable to conclude that most tart cherry growers are small entities.

At 20 cents per pound, a grower would have to produce 2.5 million pounds of cherries to reach the $500,000 receipt threshold to qualify as a large producing entity under the SBA's definition. No record evidence was provided to indicate how many tart cherry growers produce 2.5 million pounds or more. One witness testified, however, that an estimated 150 growers (about 17 percent of the total number of growers) produce in excess of 1 million pounds, with the remainder producing less than that. With a majority of growers producing less than 1 million pounds, it follows that a majority of growers produce less than 2.5 million pounds. This supports the conclusion that the majority of tart cherry growers are small businesses. By State, however, average grower size varies considerably. The average grower in Washington accounts for roughly 910,000 pounds of cherries. Next in size is Utah with 680,000 pounds, followed by Michigan (400,000 pounds), Wisconsin (370,000 pounds), New York (150,000 pounds) Pennsylvania (130,000 pounds), and Oregon (100,000 pounds).

This decision proposes two amendments to the tart cherry marketing order. One would clarify the current limitation on the number of Board members that may represent a single ''sales constituency.'' The second would simplify the method used to establish volume regulations for tart cherries. Both amendments would be beneficial to business entities, both large and small.

Definition of Sales Constituency

Section 930.20 of the tart cherry marketing order provides for an 18-member Cherry Industry Administrative Board to assist the Department in administering the program. That section also divides the production area into nine districts for purposes of representation on the Board and allocates membership among those districts. Five of the nine current districts, including all districts subject to volume regulation, are allocated more than one member. Those five districts are Northern Michigan (four members), Central Michigan (three members), Southern Michigan (two members), New York (two members), and Utah (two members). The four districts with one member each are Oregon, Pennsylvania, Washington, and Wisconsin. (The eighteenth Board member is selected to represent the general public, and need not be from any specific area.)

Section 930.20 further provides that for those districts allocated more than one member, only one of those members can be affiliated with a single sales constituency. Section 930.16 currently defines a sales constituency to mean a common marketing organization or brokerage firm or individual representing a group of handlers or growers.

The proposed amendment to § 930.16 would provide that an organization that receives consignments of cherries but does not direct where those cherries are sold would not be considered a sales constituency. The growers and handlers affiliated with such an organization would not be limited in their representation on the Board.

The record shows that one of the Board's primary responsibilities is to recommend regulations to implement the marketing order's authorities relating to supply management, or volume regulation. Volume regulations benefit all industry members, both large and small, by matching demand in primary markets with available supplies of tart cherries. These regulations also serve to expand sales in secondary markets. The result is improved grower and processor returns.

The record shows that approximately 11 of the current 18 members of the Board are affiliated in some way with CherrCo, the organization which raised the question of the intended meaning of the term sales constituency. Applying the current order limitation on the number of members representing a single sales constituency to CherrCo would result in five of the current Board members being declared ineligible to serve on the Board. All of these members represent regulated districts—four in Michigan and one in New York.

The record shows that CherrCo is a federated grower cooperative. It is comprised of 24 member cooperatives. CherrCo's members account for 75–80 percent of Michigan's tart cherry production, and a significant portion of the production in New York, Utah, Washington, and Wisconsin. CherrCo currently has no members in Oregon or Pennsylvania. The record indicates that the primary function of CherrCo is to establish minimum prices for certain tart cherry products. The record indicates that CherrCo is not directly involved in the actual sales of its members' products. There is intense competition among its members (as well as between its members and non-members) to sell tart cherries. The competition for sales is on the basis of individual handlers' reputations, on the quality and mix of the products they offer, on any special services they provide to their customers, and on whether or not their processing plants are certified to conform with certain sanitation standards.

The purpose of the sales constituency limitation is explained in § 930.20(f) of the order where it is stated that in order to achieve a fair and balanced representation on the Board, and to prevent any one sales constituency from gaining control of the Board, not more than one Board member may be from, or

affiliated with, a single sales constituency in those districts having more than one seat on the Board. The genesis of this limitation can be traced to the order promulgation record where it was stated that the limitation was designed to prevent the recurrence of a problem that existed under the previous tart cherry order which was in effect from 1971 through 1987. Under that order, there was no such limitation, and actions of the Board only required a simple majority vote, allowing representatives from a single sales organization to pass Board actions without support from other industry members. As was explained in the recommended decision published on January 5, 2000, concerning the amendments in this rulemaking, the tart cherry industry is comprised of many different organizations. Some were clearly meant to be covered by the sales constituency limitation, while others were not. It was clearly intended that an organization such as Cherry Central, Inc. (a cooperative) be covered. Its main purpose is to sell its members' cherries and other products. The recommended decision further explains that an organization such as the Cherry Marketing Institute was not intended to be subject to the sales constituency limitation. The formation of CherrCo, a federated grower cooperative which was not in existence when the present order was promulgated, has caused the Department and the industry to reopen this question and to consider an amendment to the definition of sales constituency. This is because an organization such as CherrCo lies somewhere between Cherry Central, Inc. and the Cherry Marketing Institute which has a primary function of conducting generic promotion activities to expand overall sales of cherries and funding and conducting research in processing techniques and product development.

Some of the exceptions and briefs filed raised issues and concerns in connection with material Issue Number 1, definition of a sales constituency, and small business considerations. The Board was of the view that this proposed amendment would not have any negative impact on small businesses and that it would in fact help small entities by allowing them to send a representative of their choice to the Board. The Board noted that the regulatory requirements of the proposed amendment were properly tailored to the size and nature of small businesses.

Two exceptions were filed that raised small business concerns. One exception from Terry Dorsing, President, Washington Tart Cherries Products, Inc., presented an overview of the functioning of the tart cherry marketing order since its inception. Mr. Dorsing stated that since the initial hearing to establish the order, it was his and his company's position that the Northwest and other small production areas would be dominated by the large production in Michigan and the impact of various provisions of the order would be detrimental to small entities. The exception also stated that a marketing order was not good for the small producer and for the tart cherry industry as a whole. While acknowledging the inclusion in the provisions of the order of a variety of safeguards to protect small producers and production areas, the exception concluded that the Board itself, in recommending further changes to the order (currently subject to a separate rulemaking action) was preparing to tear down the safeguards to the detriment of small entities.

Another exception from Lee Schrepel, Chair, Oregon Tart Cherry Association, raised concern about the size of CherrCo affiliates, noting that perhaps most of the large handlers in the industry were CherrCo affiliates. The exception argued that the proposal had the appearance of giving a greater proportion of Board control to larger handlers, as defined under the Regulatory Flexibility Act. The exception questioned whether the Department failed to make a thorough examination of all relevant small business considerations, as required by that Act. The exception also noted that there are several examples of how boards administering Federal marketing orders for other commodities have protected the small, the remote and the independent, with each of the orders limiting the degree of domination by a particular constituency in the governed industry. Finally, the exception stated the proposed amendment should be rejected, that the Department should refer the matter back to the Board for further study to craft a more suitable amendment, or that the Department should develop a compromise amendment itself taking into account the alternative proposals presented in the rulemaking proceedings. Alternatively, the exception stated that there should be an allowance for permanent exclusion of all producers and handlers in the Oregon district, an issue that has not been proposed in the proceeding.

Alternative proposals discussed at the hearing were considered and discussed in the Recommended Decision. It was determined that those proposals failed to properly address some of the fundamental issues faced by the tart cherry industry. One of these issues is that some districts are subject to volume control, while others are not. Another deals with the varying marketing and growing conditions. Probably the most important issue which alternative proposals failed to address was fair representation. Restrictions on an organization such as CherrCo could prevent growers in some of the highest volume producing areas from being adequately represented on the Board.

Material Issue Number 1 concerns a proposed amendment that would clarify the current limitation on the number of Board members that may be from, or affiliated with, a single sales constituency. This proposal is intended to be inclusive rather than exclusive. The issue presented by this proposed amendment is whether an organization or entity, such as CherrCo, should be limited in terms of membership on the Board. The Department has fully reviewed this amendment consistent with the provisions of the Regulatory Flexibility Act as well as the statutory authority for this program. In doing so, it has concluded that this proposed amendment should be favorable to both large and small entities. The two exceptions received raising small business considerations are not in agreement with this conclusion.

The exceptions raised a variety of issues and concerns regarding the proposed amendment as well as the marketing order itself. The nature and structure of a board under a marketing order program reflects the industry that is regulated. Accordingly, a marketing order may provide for one or more provisions concerning board memberships. Such provisions would be tailored to reflect the attributes of a particular industry, as appropriate. In the case of the tart cherry marketing order, a provision was crafted to prevent any single sales constituency from having control of Board decision making. The proposed amendment would clarify the application of that provision, taking into account the current state of the industry as well as the present membership on the Board. As such, the original intent of the provisions would not be changed by the clarification. Looking at this amendment in terms of its impact, we continue to conclude that the proposed amendment should be favorable to both large and small entities.

With regard to the assertion that certain safeguards in the order could be eliminated to the detriment of smaller production areas, this cannot be done by Board action alone. Any such proposed changes would be subject to a formal rulemaking process, including public

hearings and a referendum, as well as an analysis and review by the Department.

Revision of the Optimum Supply Formula

A principal feature of the tart cherry marketing order is supply management through the use of volume regulations. Authority for such regulations appears in § 930.51 of the marketing order.

Volume regulations are implemented through the establishment of free and restricted percentages. Such percentages are recommended by the Board in accordance with § 930.50 of the order, and, if deemed appropriate, implemented by the Department through the public rulemaking process. These percentages are then applied to each regulated handler's acquisitions in a given season. ''Free market tonnage percentage'' cherries may be marketed in any outlet. ''Restricted percentage'' cherries must be withheld from the primary market. They may be diverted in the orchard or at the processing plant; placed into a reserve pool; or sold in secondary markets. These secondary markets include exports (except to North America), and new products. Sales of restricted percentage cherries to these specified exempt markets receive diversion credits which handlers use to fulfill their restricted obligation.

The record indicates that the primary objective of tart cherry volume regulations is to balance supplies with market demand, thereby stabilizing the market and improving grower and processor returns. A second objective is to encourage market growth by allowing restricted cherries to be sold in secondary markets (for example, most export markets). Witnesses attributed much of the improvement in recent cherry market conditions to the use of regulation in the 1997/98 and 1998/99 seasons.

The order currently sets forth, in § 930.50, an ''Optimum Supply Formula'' (OSF) which the Board must follow in its consideration of annual free and restricted percentages. The optimum supply is currently defined as 100 percent of the average sales of the prior 3 years, to which is added a desirable carryout inventory.

The record indicates that using 100 percent of prior years' sales results in an overstatement of the optimum supply. The record shows that including the sales of restricted cherries in the optimum supply understates the projected surplus and results in a higher free percentage than supply and market conditions warrant. This is because those total sales include not only sales to the primary market, but to secondary markets as well.

In the years that tart cherry volume regulations have been used, this issue has been addressed through use of an adjustment in order to achieve an optimum supply of cherries in the marketplace. Once a surplus has been computed (deducting the optimum from the available supply), the sales to secondary markets are added back to the surplus as an economic adjustment. The Board's recommended amendment would revise the procedures currently used in calculating the optimum supply. Under its proposal, the optimum supply would be equal to the 3-year average sales in primary markets (total sales less sales to markets eligible for diversion credit) plus the target carryout. This would simplify the method of arriving at an optimum supply figure and would be easier for tart cherry growers and processors to understand. Therefore, any regulatory impact on growers or handlers would be minimal or non-existent.

The record evidence supports the conclusion that this amendment would result in no extra costs to growers or processors in that any resulting level of volume regulation would be similar to what is currently in effect and its economic effect on the industry would be similarly analyzed in each instance. It would benefit industry members both large and small, however, because the process relating to the establishment of volume regulations would be less confusing and more readily understood by industry members. This process is used by growers and handlers in making seasonal decisions (including those relating to harvesting cherries). To the extent that this process is more readily understood, all in the industry should benefit.

Further, in its brief, the Board noted that the Department considered the impact of Material Issue Number 2 on small businesses and concluded that there would be no negative impact. The Board stated that it considered several other approaches concerning the optimum supply formula and was of the view that the proposed amendment was the best alternative available.

The collection of information under the marketing order would not be affected by these amendments to the marketing order. Current information collection requirements for Part 930 are approved by OMB under OMB number 0581–0177.

As with all Federal marketing order programs, reports and forms are periodically reviewed to reduce information requirements and duplication by industry and public sector agencies.

The Department has not identified any relevant Federal rules that duplicate, overlap or conflict with this proposed rule. These amendments are designed to enhance the administration and functioning of the marketing order to the benefit of the industry.

Board meetings regarding these proposals as well as the hearing dates were widely publicized throughout the tart cherry industry, and all interested persons were invited to attend the meetings and the hearing and participate in Board deliberations on all issues. All Board meetings and the hearing were public forums and all entities, both large and small, were able to express views on these issues.

Civil Justice Reform

The amendments proposed herein have been reviewed under Executive Order 12988, Civil Justice Reform. They are not intended to have retroactive effect. If adopted, the proposed amendments would not preempt any State or local laws, regulations, or policies, unless they present an irreconcilable conflict with the amendments.

The Act provides that administrative proceedings must be exhausted before parties may file suit in court. Under section 608c(15)(A) of the Act, any handler subject to an order may file with the Secretary a petition stating that the order, any provision of the order, or any obligation imposed in connection with the order is not in accordance with law and request a modification of the order or to be exempted therefrom. A handler is afforded the opportunity for a hearing on the petition. After the hearing the Secretary would rule on the petition. The Act provides that the district court of the United States in any district in which the handler is an inhabitant, or has his or her principal place of business, has jurisdiction to review the Secretary's ruling on the petition, provided an action is filed not later than 20 days after date of the entry of the ruling.

Findings and Conclusions; Discussion of Comments

The material issues, findings and conclusions, rulings, and general findings and determinations included in the Recommended Decision set forth in the January 5, 2000, issue of the **Federal Register** (65 FR 672) are hereby approved and adopted subject to the following additions and modifications:

Based upon the briefs and exceptions filed, the findings and conclusions in material issue number 1 of the Recommended Decision concerning whether the definition of ''sales

constituency'' should be revised are amended by adding the following eight paragraphs to read as follows:

In his exception, James R. Jensen, President of CherrCo, Inc., expressed agreement with the conclusions reached in the Recommended Decision, and requested that cherry growers and handlers be given the opportunity to express their views through the referendum process. This document calls for such a referendum to be conducted.

The Cherry Industry Administrative Board also agreed with the AMS recommendation on this issue, but requested one clarification. The Recommended Decision concluded that CherrCo should not be considered a sales constituency for the purpose of Board membership limitations. The Board requested that this conclusion be expanded to include all purposes regulated by the order. The term ''sales constituency'' is only used in the order with respect to Board membership. It has no relevance to other order provisions. Thus, the Board's recommendation is unnecessary, and its exception is denied.

The exceptions filed by Tim O. Brian, Lee Schrepel and Terry Dorsing asked that AMS revise its decision to conclude that CherrCo is a sales constituency and that its membership on the Board should be limited.

Mr. Brian and Mr. Schrepel took exception to the statement that CherrCo does not actively arrange sales of tart cherries. They supported their position by providing a Membership and Marketing Agreement dated March 31, 1997, containing the statement that CherrCo ''* * * may sell the Product itself or may license sales agents to sell the Product.'' Record evidence shows that CherrCo licenses sales agents to sell its members' cherries. These agents compete among themselves and with non-member sales agents to garner sales. CherrCo itself does not sell cherries. If, in the future, CherrCo takes on that function, such activities would be reviewed in light of the prohibition.

Mr. Brian also argued that CherrCo has taken on additional functions since the time of the hearing. First, it has purchased the label ''CherreX'' from a cherry export trading company. Second, it has been in the process of forming a supply cooperative. Whether any of the present or future activities would make industry members affiliated with CherrCo subject to the Board membership restriction would be determined on the facts in each instance. In any case, the definition amendment is generic and is not applicable only to CherrCo.

Mr. Schrepel and Mr. Dorsing claimed that CherrCo's membership should be limited because Board members affiliated with that organization have recently taken actions that are counter to the interests of industry members not affiliated with CherrCo. Both exceptions pointed to a group of marketing order amendment proposals submitted by the Board in October 1999. Included were proposals to eliminate the 15 million pound threshold used to determine whether a district is subject to volume regulation; allowing diversion credits for tart cherry juice and juice concentrate; setting assessments for all cherry products at the same level; and allowing the Board chairman to designate a person to vote at a Board meeting if neither a member nor his or her alternate is present. While it is true that a second set of amendment proposals has been recommended and an amendatory hearing was held in March and April 2000, those proposals are and will be considered in a separate formal rulemaking proceeding. Interested parties have and will be given the opportunity to express their viewpoints, and growers and handlers will be able to vote in referendum.

Mr. Schrepel argued that USDA did not adequately consider alternative proposals relating to Board membership. He pointed to the fact that other marketing orders (for example, those covering cranberries and almonds) limit the number of positions that can be held by a particular constituency. The record shows that this issue has been under consideration by the Board for many months, and this amendment was recommended as the best course of action. The public hearing held on this matter provided interested persons with the opportunity to present alternative plans related to Board membership. As previously discussed, alternatives presented at the hearing failed to address some of the fundamental issues faced by the tart cherry industry, such as adequate representation of growers in high volume producing areas. As such, AMS rejected those alternatives.

Mr. Schrepel also argues that USDA is not fulfilling its obligation under the U.S. Constitution and the Act when it permits an interest group to control the Board. He states that the percentage of Board members affiliated with CherrCo exceeds the proportion of the cherry crop CherrCo members handle. The marketing order does not guarantee CherrCo a specified number of seats on the Board. Membership is allocated among the established districts and among growers and handlers. Every tart cherry grower and handler has the opportunity to participate in the nomination process, and can vote on who should be his or her representative on the Board. All Board actions are subject to the approval of the Secretary, and any resultant rulemaking actions provide further opportunity for public participation.

Rulings on Exceptions

In arriving at the findings and conclusions and the regulatory provisions of this decision, the exceptions to the Recommended Decision were carefully considered in conjunction with the record evidence. To the extent that the findings and conclusions and the regulatory provisions of this decision are at variance with the exceptions, such exceptions are denied.

Marketing Agreement and Order

Annexed hereto and made a part hereof is the document entitled ''Order Amending the Order Regulating the Handling of Tart Cherries Grown in the States of Michigan, New York, Pennsylvania, Oregon, Utah, Washington, and Wisconsin.'' This document has been decided upon as the detailed and appropriate means of effectuating the foregoing findings and conclusions.

It is hereby ordered, That this entire decision be published in the **Federal Register**.

Referendum Order

It is hereby directed that a referendum be conducted in accordance with the procedure for the conduct of referenda (7 CFR part 900.400 *et seq.*) to determine whether the issuance of the annexed order amending the order regulating the handling of tart cherries grown in the States of Michigan, New York, Pennsylvania, Oregon, Utah, Washington, and Wisconsin is approved or favored by growers and processors, as defined under the terms of the order, who during the representative period were engaged in the production or processing of tart cherries in the production area.

The representative period for the conduct of such referendum is hereby determined to be June 1, 1999, through May 31, 2000.

The agent of the Secretary to conduct such referendum is hereby designated to be Kenneth G. Johnson, Regional Manager, DC Marketing Field Office, Marketing Order Administration Branch, Fruit and Vegetable Programs, AMS, USDA, 4700 River Road, Unit 155, Suite 2A04, Riverdale, Maryland 20737; telephone (301) 734–5243.

List of Subjects in 7 CFR Part 930

Marketing agreements, Tart cherries, Reporting and recordkeeping requirements.

Dated: December 5, 2000.

Kenneth C. Clayton,

Associate Administrator, Agricultural Marketing Service.

Order Amending the Order Regulating the Handling of Tart Cherries Grown in the States of Michigan, New York, Pennsylvania, Oregon, Utah, Washington, and Wisconsin [1]

Findings and Determinations

Thefindings and determinations hereinafter set forth are supplementary and in addition to the findings and determinations previously made in connection with the issuance of the order; and all of said previous findings and determinations are hereby ratified and affirmed, except insofar as such findings and determinations may be in conflict with the findings and determinations set forth herein.

(a) *Findings and Determinations Upon the Basis of the Hearing Record.*

Pursuant to the provisions of the Agricultural Marketing Agreement Act of 1937, as amended (7 U.S.C. 601 *et seq.*), and the applicable rules of practice and procedure effective thereunder (7 CFR part 900), a public hearing was held upon the proposed amendments to the Marketing Agreement and Order No. 930 (7 CFR part 930), regulating the handling of tart cherries Grown in the States of Michigan, New York, Pennsylvania, Oregon, Utah, Washington, and Wisconsin.

Upon the basis of the evidence introduced at such hearing and the record thereof, it is found that:

(1) The marketing agreement and order, as hereby proposed to be amended, and all of the terms and conditions thereof, will tend to effectuate the declared policy of the Act;

(2) The marketing agreement and order, as hereby proposed to be amended, regulate the handling of tart cherries grown in the production area in the same manner as, and is applicable only to persons in the respective classes of commercial and industrial activity specified in the marketing order upon which hearings have been held;

(3) The marketing agreement and order, as hereby proposed to be amended, are limited in application to the smallest regional production area which is practicable, consistent with carrying out the declared policy of the Act, and the issuance of several orders applicable to subdivisions of the production area would not effectively carry out the declared policy of the Act; and

(4) The marketing agreement and order, as hereby proposed to be amended, prescribe, insofar as practicable, such different terms applicable to different parts of the production area as are necessary to give due recognition to the differences in the production and marketing of tart cherries grown in the production area; and

(5) All handling of tart cherries grown in the production area is in the current of interstate or foreign commerce or directly burdens, obstructs, or affects such commerce.

Order Relative to Handling

It is therefore ordered, That on and after the effective date hereof, all handling of tart cherries grown in the States of Michigan, New York, Pennsylvania, Oregon, Utah, Washington and Wisconsin, shall be in conformity to, and in compliance with, the terms and conditions of the said order as hereby proposed to be amended as follows:

The provisions of the proposed marketing agreement and the order amending the order contained in the Recommended Decision issued by the Administrator on December 29, 1999, and published in the **Federal Register** on January 5, 2000, shall be and are the terms and provisions of this order amending the order and are set forth in full herein.

PART 930—TART CHERRIES GROWN IN THE STATES OF MICHIGAN, NEW YORK, PENNSYLVANIA, OREGON, UTAH, WASHINGTON, AND WISCONSIN

1. The authority citation for 7 CFR part 930 continues to read as follows:

Authority: 7 U.S.C. 601–674.

2. In part 930, § 930.16 is revised to read as follows:

§ 930.16 Sales constituency.

Sales constituency means a common marketing organization or brokerage firm or individual representing a group of handlers and growers. An organization which receives consignments of cherries and does not direct where the consigned cherries are sold is not a sales constituency.

3. In § 930.50, paragraph (a) is revised to read as follows:

§ 930.50 Marketing policy.

(a) *Optimum supply.* On or about July 1 of each crop year, the Board shall hold a meeting to review sales data, inventory data, current crop forecasts and market conditions in order to establish an optimum supply level for the crop year. The optimum supply volume shall be calculated as 100 percent of the average sales of the prior three years, reduced by the average sales that represent dispositions of restricted percentage cherries qualifying for diversion credit for the same three years, unless the Board determines that it is necessary to recommend otherwise with respect to sales of restricted percentage cherries, to which shall be added a desirable carryout inventory not to exceed 20 million pounds or such other amount as the Board, with the approval of the Secretary, may establish. This optimum supply volume shall be announced by the Board in accordance with paragraph (h) of this section.

* * * * *

[FR Doc. 00–31455 Filed 12–8–00; 8:45 am]

BILLING CODE 3410–02–P

[1] This order shall not become effective unless and until the requirements of § 900.14 of the rules of practice and procedure governing proceedings to formulate marketing agreements and marketing orders have been met.

DEPARTMENT OF JUSTICE

Drug Enforcement Administration

21 CFR Part 1308

[DEA–209P]

RIN 1117–AA59

Schedule of Controlled Substances: Placement of Dichloralphenazone Into Schedule IV

AGENCY: Drug Enforcement Administration (DEA), Department of Justice.

ACTION: Notice of proposed rulemaking.

SUMMARY: This proposed rule is issued by the Deputy Administrator of the Drug Enforcement Administration (DEA) to expressly list dichloralphenazone as a Schedule IV controlled substance under the Controlled Substances Act (CSA). This proposed action is based on the DEA's interpretation that dichloralphenazone is a compound containing chloral hydrate, a Schedule IV controlled substance under 21 CFR part 1308; by definition, dichloralphenazone is also a Schedule IV substance. If finalized, this action will impose the regulatory controls and criminal sanctions of Schedule IV on those persons who handle dichloralphenazone or products containing dichloralphenazone.

DATES: Comments must be received by February 9, 2001.

ADDRESSES: Comments should be submitted in triplicate to the Deputy Administrator, Drug Enforcement Administration, Washington, D.C. 20537; Attention: DEA Federal Register Representative/CCR.

FOR FURTHER INFORMATION CONTACT: Frank Sapienza, Chief, Drug and Chemical Evaluation Section, Drug Enforcement Administration, Washington, D.C. 20537, (202) 307–7183.

SUPPLEMENTARY INFORMATION:

What Is Dichloralphenazone?

Dichloralphenazone (also known as dichloralantipyrine) is a compound containing two molecules of chloral hydrate (2,2,2-trichloro-1,1-ethanediol) and one molecule of phenazone (1,2-dihydro-1,5-dimethyl-2-phenyl-3Hpyrazol-3-one); CAS No. 480–30–8. Dichloralphenazone is a sedative typically used in combination with isometheptene mucate and acetaminophen in formulating prescription pharmaceuticals for the relief of tension and vascular headaches. When dichloralphenazone is administered or placed in an aqueous solution (a liquid preparation of any substance dissolved in water) it dissociates to form chloral hydrate and phenazone.

Why Is DEA Issuing This Notice?

Schedule IV controlled substances are listed in 21 CFR 1308.14. Section 1308.14(c) lists 49 depressants, including chloral hydrate, that are Schedule IV controlled substances. The first sentence of 21 CFR 1308.14(c) states that the category of Schedule IV depressants includes ''any material, compound, mixture, or preparation which contains any quantity of'' the substances listed in the section. Since dichloralphenazone is a compound containing chloral hydrate, it is likewise a Schedule IV depressant.

It has come to the attention of the DEA that a large portion of the pharmaceutical industry that handles dichloralphenazone or products containing dichloralphenazone has failed to recognize that this is a compound containing chloral hydrate. To clarify this situation, the Deputy Administrator is publishing this notice proposing that dichloralphenazone be expressly listed as a Schedule IV depressant and assigned a specific DEA control number.

What Is the Effect of This Notice?

This notice clarifies the DEA's position regarding the control status for dichloralphenazone. This proposed rule, if finalized, would specifically list dichloralphenazone as a Schedule IV depressant. In addition, this notice provides an opportunity for interested persons to comment, in writing, with regard to any information they feel may have a bearing on this matter.

What Regulatory Requirements Will Be Applied to Handlers of Dichloralphenazone?

Persons currently involved with the manufacture or handling of this substance are not expected to comply with DEA regulations applicable to a Schedule IV substance until such time as a final rule is published in the **Federal Register**. If/When a final rule is published in the **Federal Register**, persons who manufacture, distribute, dispense, import, export, store or engage in research with dichloralphenazone will be provided with delayed dates for compliance with Federal regulations in order to avoid imposing any special hardship. Upon publication of a final rule, the applicable regulations and amount of time for compliance will be as follows:

1. Registration

Any person who manufactures, distributes, dispenses, imports or exports dichloralphenazone or who engages in research or conducts instructional activities or chemical analysis with respect to this preparation, or who proposes to engage in such activities, must be registered to conduct such activities in accordance with 21 CFR part 1301 on and after 30 days from date of the publication of the final rule in the **Federal Register**. Any person who is currently engaged in any of the above activities must submit an application for registration by 30 days from date of publication of the final rule in the **Federal Register**. Any such person may then continue their activities until the DEA has approved or denied that application.

2. Disposal of Stocks

Any person who elects not to obtain a Schedule IV registration or is not entitled to such registration must surrender all quantities of currently held dichloralphenazone in accordance with procedures outlined in 21 CFR 1307.21 on or before 30 days from date of publication of the final rule in the **Federal Register**, or may transfer all quantities of currently held dichloralphenazone to a person registered under the CSA and authorized to possess Schedule IV control substances on or before 30 days from date of publication of the final rule in the **Federal Register**. Dichloralphenazone to be surrendered to DEA must be listed on a DEA Form 41, ''Inventory of Controlled Substances Surrendered for Destruction.'' DEA Form 41 and instructions can be obtained from the nearest DEA office.

3. Security

Dichloralphenazone must be manufactured, distributed and stored in accordance with 21 CFR 1301.71, 1301.72(b), (c), and (d), 1301.73, 1301.74, 1301.75(b) and (c) and 1301.76 after date of publication of the final rule in the **Federal Register**.

4. Labeling and Packaging

All commercial containers of dichloralphenazone that are packaged on or after 180 days from date of publication of the final rule in the **Federal Register** must have the appropriate Schedule IV labeling and packaging as required by 21 CFR 1302.03–1302.07. Commercial containers of dichloralphenazone packaged before 180 days from date of publication of the final rule in the **Federal Register** and not meeting the requirements specified in 21 CFR 1302.03–1302.07 may be distributed until 270 days from date of publication of the final rule in the **Federal Register**. On and after 270 days from date of publication of the final rule in the **Federal Register** all commercial containers of dichloralphenazone must bear the CIV labels as specified in 21 CFR 1302.03–1302.07.

5. Inventory

Registrants possessing dichloralphenazone are required to take inventories pursuant to 21 CFR 1304.03, 1304.04 and 1304.11 after publication of the final rule in the **Federal Register**.

6. Records

All registrants must keep records pursuant to 21 CFR 1304.03, 1304.04 and 1304.21–1304.23 after publication of the final rule in the **Federal Register**.

7. Prescriptions

All prescriptions for dichloralphenazone or prescriptions for products containing dichloralphenazone are to be issued pursuant to 21 CFR 1306.03–1306.06 and 1306.21–1306.26. All prescriptions for dichloralphenazone or products containing dichloralphenazone issued on or before 60 days from date of publication of the final rule in the **Federal Register**, if authorized for refilling, shall, as of that date, be limited to five refills and shall not be refilled after 180 days from date of publication of the final rule in the **Federal Register**.

8. Importation and Exportation

All importation and exportation of dichloralphenazone shall be in compliance with 21 CFR part 1312 after publication of the final rule in the **Federal Register**.

9. Criminal Liability

Any activity with dichloralphenazone not authorized by, or in violation of, the CSA or the Controlled Substances Import and Export Act shall be unlawful on or after 30 days from date of publication of the final rule in the **Federal Register**, except as authorized in that rule.

Regulatory Certifications

Regulatory Flexibility Act

The Deputy Administrator hereby certifies that this rulemaking has been drafted in a manner consistent with the principles of the Regulatory Flexibility Act (5 U.S.C. 601 et seq.). It will not have a significant economic impact on a substantial number of small business entities. Most handlers of dichloralphenazone or prescription products containing this substance are already registered to handle controlled substances and are subject to the regulatory requirements of the CSA.

Executive Order 12866

The Deputy Administrator further certifies that this rulemaking has been drafted in accordance with the principles in Executive Order 12866 Section 1(b). DEA has determined that this is not a significant rulemaking action. Therefore, this action has not been reviewed by the Office of Management and Budget.

Executive Order 12988

This regulation meets the applicable standards set forth in Sections 3(a) and 3(b)(2) of Executive Order 12988 Civil Justice Reform.

Executive Order 13132

This rulemaking does not preempt or modify any provision of state law; nor does it impose enforcement responsibilities on any state; nor does it diminish the power of any state to enforce its own laws. Accordingly, this rulemaking does not have federalism implications warranting the application of Executive order 13132. Unfunded Mandates Reform Act of 1995

This rule will not result in the expenditure by State, local, and tribal governments, in the aggregate, or by the private sector, of $100,000,000 or more in any one year, and will not significantly or uniquely affect small governments. Therefore, no actions were deemed necessary under the provisions of the Unfunded Mandates Reform Act of 1995.

Small Business Regulatory Enforcement Fairness Act of 1996

This rule is not a major rule as defined by Section 804 of the Small Business Regulatory Enforcement Fairness Act of 1996. This rule will not result in an annual effect on the economy of $100,000,000 or more; a major increase in costs or prices; or significant adverse effects on competition, employment, investment, productivity, innovation, or on the ability of United States-based companies to compete with foreign-based companies in domestic and export markets.

Plain Language Instructions

The Drug Enforcement Administration makes every effort to write clearly. If you have suggestions as to how to improve the clarity of this regulation, call or write Patricia M. Good, Chief, Liaison and Policy Section, Office of Diversion Control, Drug Enforcement Administration, Washington, D.C. 20537, telephone (202) 307–7297.

List of Subjects in 21 CFR Part 1308

Administrative practice and procedure, Drug traffic control, Narcotics, prescription drugs.

Under the authority vested in the Attorney General by Section 201(a) of the CSA [21 U.S.C. 811(a)], and delegated to the Administrator of the DEA by the Department of Justice regulations (21 CFR 0.100), and redelegated to the Deputy Administrator of the DEA pursuant to 28 CFR 0.104, the Deputy Administrator hereby proposes that 21 CFR part 1308 be amended as follows:

PART 1308—[AMENDED]

1. The authority citation for 21 CFR part 1308 continues to read as follows:

Authority: 21 U.S.C. 811, 812, 871(b) unless otherwise noted.

2. Section 1308.14 is proposed to be amended by redesignating the existing paragraphs (c)(15) through (c)(49) as (c)(16) through (c)(50) and by adding a new paragraph (c)(15) to read as follows:

§ 1308.14 Schedule IV.

* * * * *

(c) * * *

(15) Dichloralphenazone 2467

* * * * *

Dated: November 30, 2000.

Julio F. Mercado,

Deputy Administrator.

[FR Doc. 00–31356 Filed 12–8–00; 8:45 am]

BILLING CODE 4410–09–M

LIBRARY OF CONGRESS

Copyright Office

37 CFR Part 201

[Docket No. RM 2000–4B]

Public Performance of Sound Recordings: Definition of a Service

AGENCY: Copyright Office, Library of Congress.

ACTION: Petition for rulemaking, denial.

SUMMARY: On April 17, 2000, the Digital Media Association (''DiMA'') filed a petition with the Copyright Office, requesting that the Office initiate a rulemaking proceeding to amend the rule that defines the term ''Service'' for purposes of the statutory license governing the public performance of sound recordings by means of digital audio transmissions. DiMA sought an amendment that, if adopted, would expand the current definition of the term ''Service'' to state that a service is not interactive simply because it offers the consumer some degree of influence over the programming offered by the webcaster. For the reasons set forth in this notice, the Copyright Office is denying the DiMA petition.

DATE: December 11, 2000.

FOR FURTHER INFORMATION CONTACT: David O. Carson, General Counsel, or Tanya M. Sandros, Senior Attorney, Copyright Arbitration Royalty Panel, P.O. Box 70977, Southwest Station, Washington, DC 20024. Telephone: (202) 707–8380. Telefax: (202) 252–3423.

SUPPLEMENTARY INFORMATION:

Background

Since the enactment of the Digital Performance Right in Sound Recordings Act of 1995 (''DPRA''), Public Law 104–39, copyright owners of sound recordings have enjoyed an exclusive right to perform their copyrighted works publicly by means of a digital audio transmission, subject to certain limitations and exemptions. Among the limitations on the newly created digital performance right was the creation of a statutory license for nonexempt, noninteractive, digital subscription transmissions. 17 U.S.C. 114(d)(2), (3) and (f) (1995).

This license was amended in 1998 in response to the rapid growth of digital communications networks, *e.g.,* the Internet, and the confusion surrounding the question of how the DPRA applied to certain nonsubscription digital audio services. These changes, included in the Digital Millennium Copyright Act of 1998 (''DMCA''), Public Law 105–304, expanded the section 114 statutory license to expressly cover nonexempt eligible nonsubscription transmissions and nonexempt transmissions made by preexisting satellite digital audio radio services. 17 U.S.C. 114(f) (1998).

For purposes of the DMCA, an ''eligible nonsubscription transmission'' is defined as:

> a non-interactive nonsubscription digital audio transmission not exempt under subsection (d)(1) that is made as part of a service that provides audio programming consisting, in whole or in part, of performances of sound recordings, including retransmissions of broadcast transmissions, if the primary purpose of the service is to provide to the public such audio or other entertainment programming, and the primary purpose of the service is not to sell, advertise, or promote particular products or services other than sound recordings, live concerts, or other music-related events.

17 U.S.C. 114(j)(6) (1998). A key element of the definition is the requirement that the transmission must be ''non-interactive.'' Unless a service meets this criterion, it is ineligible for the statutory license and, instead, must negotiate a voluntary agreement with the copyright owner(s) of the sound recordings before performing the works by means of digital audio transmissions. 17 U.S.C. 114(d)(3) (1998).

The distinction between interactive and non-interactive transmissions is central to determining whether a service that transmits performances of sound recordings is eligible to operate under the section 114 licensing scheme. Non-interactive services may make use of the statutory license, but interactive services incur full copyright liability under the digital performance right and, therefore, must conduct arms-length negotiations with the copyright owners of the sound recordings for a license before making a digital transmission of a sound recording. Congress imposed full copyright liability on interactive services because it believed ''interactive services [were] most likely to have a significant impact on traditional record sales, and therefore pose[d] the greatest threat to the livelihoods of those whose income depends upon revenues derived from traditional record sales.'' S. Rep. No. 104–128, at 16 (1995).

Congress first defined an ''interactive service'' in the DPRA as a service that:

> enables a member of the public to receive, on request, a transmission of a particular sound recording chosen by or on behalf of the recipient. The ability of individuals to request that particular sound recordings be performed for reception by the public at large does not make a service interactive. If an entity offers both interactive and non-interactive services (either concurrently or at different times), the non-interactive component shall not be treated as part of an interactive service.

17 U.S.C. 114(j)(4) (1995). The second sentence was added to make clear that ''the term ''interactive service'' is not intended to cover traditional practices engaged in by, for example, radio broadcast stations, through which individuals can ask the station to play a particular sound recording as part of the service's general programming available for reception by members of the public at large.'' S. Rep. No. 104–128, at 33–34 (1995).

In the DMCA, Congress expanded this definition to include further explanation of the type of activity that does not, in and of itself, make a service interactive. Specifically, the DMCA refined the definition of an ''interactive service'' as follows:

> (7) An ''interactive service'' is one that enables a member of the public to receive a transmission of a program specially created for the recipient, or on request, a transmission of a particular sound recording, whether or not as part of a program, which is selected by or on behalf of the recipient. The ability of individuals to request that particular sound recordings be performed for reception by the public at large, or in the case of a subscription service, by all subscribers of the service, does not make a service interactive, if the programming on each channel of the service does not substantially consist of sound recordings that are performed within 1 hour of the request or at a time designated by either the transmitting entity or the individual making such request. If an entity offers both interactive and noninteractive services (either concurrently or at different times), the noninteractive component shall not be treated as part of an interactive service.

17 U.S.C. 114(j)(7) (1998). In both cases, Congress sought to identify a service as interactive according to the amount of influence a member of the public would have on the selection and performance of a particular sound recording. Neither definition, however, draws a bright line delineating just how much input a member of the public may have upon the basic programming of the service.

On April 17, 2000, the Digital Media Association (''DiMA'') filed a petition with the Office, seeking clarification on this point and an amendment to the regulation defining the term ''service.'' DiMA's proposed rule would amend 37 C.F.R. 201.35(b)(2) as follows:

> A Service making transmissions that otherwise meet the requirements for the section 114(f) statutory license is not rendered ''interactive,'' and thus ineligible for the statutory license, simply because the consumer may express preferences to such Service as to the musical genres, artists and sound recordings that may be incorporated into the Service's music programming to the public. Such a Service is not ''interactive'' under section 114(j)(7), as long as: (i) Its transmissions are made available to the public generally; (ii) the features offered by the Service do not enable the consumer to determine or learn in advance what sound recordings will be transmitted over the Service at any particular time; and (iii) its transmissions do not substantially consist of sound recordings performed within one hour of a request or at a time designated by the transmitting entity or the individual making the request.

The effect of the amendment would be that a service would not be considered interactive merely because it offers a consumer some degree of influence over the streamed programming.

Shortly thereafter, the Copyright Office published a notice in the **Federal Register**, seeking comment from interested parties on two issues. First, the Office asked whether the petition articulated a proper subject for a rulemaking proceeding; and second, assuming the requested rule could be promulgated through a notice and comment proceeding, whether sufficient information existed ''to promulgate a regulation that could accurately distinguish between activities that are interactive and those that are not.'' 65 FR 33266, 33267 (May 23, 2000).

For the reasons set forth herein, the Copyright Office denies DiMA's petition.

Comments

Comments and reply comments were filed by the Recording Industry Association of America, Inc. (''RIAA'') and the Digital Media Association (''DiMA'').

Is a Rulemaking Proceeding Necessary or Appropriate?

DiMA seeks its proposed amendment to the definition of the term ''service'' based on its understanding that a consumer-influenced webcast would not be prohibited from using the section 114 statutory license. According to DiMA, this clarification is necessary in large part because copyright holders of the sound recordings have taken the untenable position that ''consumer-influenced webcasting *of any nature* is not eligible for the DMCA statutory license.'' DiMA comment at 4; DiMA reply at 9–11.

At the same time, DiMA states that it is impossible to discern all possible

permutations of features and functionalities that may be offered by a service which allows consumer input on programming selections. DiMA comment at 5. Nevertheless, DiMA asserts that its proposed rule establishes guidelines to be used to determine whether a specific service is interactive after a fact-intensive analysis of its activities. DiMA acknowledges, however, that the Office may determine that application of the rule, especially the guidelines set forth in the second half of the proposal, may involve evidentiary issues that bar adoption of the entire proposal. If this is the case, DiMA asks the Office to adopt, at a minimum, the first sentence of the proposed rule, which reads as follows:

> A Service making transmissions that otherwise meet the requirements for the section 114(f) statutory license is not rendered ''interactive,'' and thus ineligible for the statutory license, simply because the consumer may express preferences to such Service as to the musical genres, artists and sound recordings that may be incorporated into the Service's music programming to the public.

DiMA reply at 7. DiMA is expressly not asking the Copyright Office to determine whether any particular service is non-interactive. *Id.*

DiMA also argues that the rulemaking is necessary in order to ''define the appropriate bounds'' of the Copyright Arbitration Royalty Panel (''CARP'') ''proceeding which will determine the statutory rates for sound recording performances (and certain reproductions) associated with webcasting.'' DiMA Petition at 2; DiMA comment at 4; *see also* 64 FR 52107 (September 27, 1999).

RIAA opposes the DiMA petition. It asserts that DiMA's proposed change will not clarify current law, but actually change it. RIAA argues that clear standards for determining what constitutes an ''interactive service'' have already been set forth in section 114(j)(7). Specifically, section 114(j)(7) requires an ''interactive service'' to either ''enable[] a member of the public to receive a transmission of a program specially created for the recipient, or on request, a transmission of a particular sound recording, whether or not as part of a program, which is selected by or on behalf of the recipient.'' 17 U.S.C. 114(j)(7).

RIAA also argues that the determination as to whether a particular service is interactive requires a fact-intensive inquiry to determine whether the service offers the type of prohibited activity characterized in section 114(j)(7). Moreover, RIAA contends that the DiMA proposal fails to define a class of service that embodies these principles, offering instead, a rule meant to cover ''a myriad of services with different personalization features,'' which defy characterization into general categories. RIAA comment at 12. RIAA then cites potential problems with the proffered regulatory language due to the lack of precise definitions for concepts and terms such as ''preferences'' or ''incorporated into the Service's programming.'' *Id.* at 6.

RIAA also takes exception to DiMA's assertions that RIAA believes any amount of consumer influence automatically makes a service interactive. In fact, RIAA acknowledges that all music programming services are likely to be influenced by their consumers' tastes. RIAA comment at 3. For this reason, RIAA purports to examine each service on a case-by-case basis, asking the question ''whether the service offers 'programs specially created for the recipient' or whether it allows listeners to request particular sound recordings.'' RIAA reply at 2–3. Because it evaluates each service in this manner, RIAA maintains that DiMA's argument in support of this rulemaking proceeding is groundless.

The Copyright Office has considered DiMA's request to initiate a rulemaking to clarify that a service does not become interactive merely because consumers may have some influence on the music programming offered by the service and finds that this concept is not in dispute. RIAA readily acknowledges that consumers may express preferences for certain music genres, artists, or even sound recordings without the service necessarily becoming interactive. RIAA comment at 8. The Office agrees, and concurs with DiMA that certain passages from the DMCA Conference Report quoted in its comments support this interpretation. For example, the following passage in the DMCA Conference Report distinguishes between certain activities that make a service interactive and those that do not:

> [A] service would be interactive if it allowed a small number of individuals to request that sound recordings be performed in a program specially created for that group and not available to any individuals outside of that group. In contrast, a service would not be interactive if it merely transmitted to a large number of recipients of the service's transmissions a program consisting of sound recordings requested by a small number of those listeners.

H.R. Conf. Rep. No. 105–797, at 87–88 (1998) (''DMCA Conference Report'').

However, the fact that some degree of consumer influence on a service's programming is permissible does not mean that a regulation to clarify that fact is necessary or even desirable. In fact, because the law and the accompanying legislative history make it clear that consumers can have some influence on the offerings made by a service without making the service interactive, there is no need to amend the regulations to make this point.

What is not clear, however, is how much influence a consumer can have on the programming offered by a transmitting entity before that activity must be characterized as interactive. The examples cited in the comments and gleaned from the legislative history are merely illustrative and do not identify with specificity those characteristics of a service that make it interactive.[1] Such a determination must be made on a case-by-case basis after the development of a full evidentiary record in accordance with the standards and precepts already set forth in the statute. DiMA appears to agree with this approach in theory and, in fact, expressly states that it does not seek a ruling on whether any particular service should be characterized as an interactive service. DiMA reply at 7.

Moreover, courts recognize that some principles must evolve over a period of time before an agency will have gathered sufficient information to formulate a general rule. *See Securities and Exchange Commission* v. *Chenery Corp.,* 332 U.S. 194, 202–203 (1947) (acknowledging that ''the agency may not have sufficient experience with a particular problem to warrant rigidifying its tentative judgment into a hard and fast rule. Or the problem may be so specialized and varying in nature as to be impossible to capture within the boundaries of a general rule.''). *See also, WWHT, Inc.* v. *Federal Communications Commission,* 656 F.2d 807, 817 (D.C. Cir. 1981) (supporting agency's denial of rulemaking petition in case where rapid technological development in area makes it difficult to formulate effective regulations, or the state of development ''may be such that sufficient data are not yet available on which to premise adequate regulations.'').

In light of the rapidly changing business models emerging in today's digital marketplace, no rule can accurately draw the line demarcating the limits between an interactive service and a noninteractive service. Nor can one readily classify an entity which

[1] RIAA and DiMA discussed the services offered by Launch Media, Inc., through its LAUNCHcast service, and MTV, through its Radio SonicNet service, to illustrate the type of offerings that are in dispute. *See* RIAA comment at 6–7; DiMA reply at 18–21. From these descriptions, there is considerable doubt whether either offering would qualify as an ''interactive service.''

makes transmissions as exclusively interactive or noninteractive. The statutory definition of an ''interactive service'' and the DMCA Conference Report make it clear that a transmitting entity may offer both types of service, either concurrently or at different times, and that ''the noninteractive components are not to be treated as part of an interactive service, and thus are eligible for statutory licensing.'' *See,* DMCA Conference Report at 88 (1998). The proposed amendment makes no mention of this nuance of the law.

Moreover, the Copyright Office is not persuaded that any new rules are necessary to discern which parties should participate in the current copyright arbitration royalty panel proceeding, the purpose of which is only to set rates and terms for the public performance of sound recordings made in accordance with the section 114 statutory license. 17 U.S.C. 114(f)(2)(A). The panel's responsibility is to establish the value of the performances and set appropriate rates, not to discern whether a particular service meets the eligibility requirements for using the license.

In short, the Office does not believe that DiMA has presented a persuasive case that a rulemaking on this issue is necessary, desirable, or feasible.

For these reasons, the Office denies DiMA's petition.

Dated: November 21, 2000.

Marybeth Peters,

Register of Copyrights.

[FR Doc. 00–31458 Filed 12–8–00; 8:45 am]

BILLING CODE 1410–31–P

ENVIRONMENTAL PROTECTION AGENCY

40 CFR Part 55

[FRL–6914–9]

Outer Continental Shelf Air Regulations; Consistency Update for California

AGENCY: Environmental Protection Agency (EPA).

ACTION: Proposed rule—consistency update.

SUMMARY: EPA is proposing to update a portion of the Outer Continental Shelf (OCS) Air Regulations. Requirements applying to OCS sources located within 25 miles of states' seaward boundaries must be updated periodically to remain consistent with the requirements of the corresponding onshore area (COA), as mandated by section 328(a)(1) of the Clean Air Act, as amended in 1990 (the Act). The portion of the OCS air regulations that is being updated pertains to the requirements for OCS sources for which the South Coast Air Quality Management District (South Coast AQMD) and Ventura County Air Pollution Control District (Ventura County APCD) are the designated COAs. The intended effect of approving the OCS requirements for the above Districts, contained in the Technical Support Document, is to regulate emissions from OCS sources in accordance with the requirements onshore. The changes to the existing requirements discussed below are proposed to be incorporated by reference into the Code of Federal Regulations and are listed in the appendix to the OCS air regulations.

DATES: Comments on the proposed update must be received on or before January 10, 2001.

ADDRESSES: Comments must be mailed (in duplicate if possible) to: EPA Air Docket (Air-4), Attn: Docket No. A–93–16 Section XXII, Environmental Protection Agency, Air Division, Region 9, 75 Hawthorne St., San Francisco, CA 94105.

Docket: Supporting information used in developing the rule and copies of the documents EPA is proposing to incorporate by reference are contained in Docket No. A–93–16 Section XXII. This docket is available for public inspection and copying Monday–Friday during regular business hours at the following locations:

EPA Air Docket (Air-4), Attn: Docket No. A–93–16 Section XXII, Environmental Protection Agency, Air Division, Region 9, 75 Hawthorne St., San Francisco, CA 94105.

EPA Air Docket (LE–131), Attn: Air Docket No.A–93–16, Section XXII, Environmental Protection Agency, Air Docket (6102), Ariel Rios Building, 1200 Pennsylvania Avenue, NW., Washington DC 20460.

A reasonable fee may be charged for copying.

FOR FURTHER INFORMATION CONTACT: Christine Vineyard, Air Division (Air-4), U.S. EPA Region 9, 75 Hawthorne Street, San Francisco, CA 94105, (415) 744–1197.

SUPPLEMENTARY INFORMATION:

I. Background Information
Why is EPA taking this action?
II. EPA's Evaluation
A. What criteria was used to evaluate rules submitted for update of 40 CFR part 55?
B. What rule requirements were submitted for update of 40 CFR part 55?

I. Background Information

Why is EPA Taking This Action?

On September 4, 1992, EPA promulgated 40 CFR part 55 [1], which established requirements to control air pollution from OCS sources in order to attain and maintain federal and state ambient air quality standards and to comply with the provisions of part C of title I of the Act. Part 55 applies to all OCS sources offshore of the States except those located in the Gulf of Mexico west of 87.5 degrees longitude. Section 328 of the Act requires that for such sources located within 25 miles of a state's seaward boundary, the requirements shall be the same as would be applicable if the sources were located in the COA. Because the OCS requirements are based on onshore requirements, and onshore requirements may change, section 328(a)(1) requires that EPA update the OCS requirements as necessary to maintain consistency with onshore requirements.

Pursuant to § 55.12 of the OCS rule, consistency reviews will occur (1) at least annually; (2) upon receipt of a Notice of Intent under § 55.4; or (3) when a state or local agency submits a rule to EPA to be considered for incorporation by reference in part 55. This proposed action is being taken in response to the submittal of rules by two local air pollution control agencies. Public comments received in writing within 30 days of publication of this document will be considered by EPA before publishing a final rule.

Section 328(a) of the Act requires that EPA establish requirements to control air pollution from OCS sources located within 25 miles of states' seaward boundaries that are the same as onshore requirements. To comply with this statutory mandate, EPA must incorporate applicable onshore rules into part 55 as they exist onshore. This limits EPA's flexibility in deciding which requirements will be incorporated into part 55 and prevents EPA from making substantive changes to the requirements it incorporates. As a result, EPA may be incorporating rules into part 55 that do not conform to all of EPA's state implementation plan (SIP) guidance or certain requirements of the Act. Consistency updates may result in the inclusion of state or local rules or regulations into part 55, even though the same rules may ultimately be disapproved for inclusion as part of the

[1] The reader may refer to the Notice of Proposed Rulemaking, December 5, 1991 (56 FR 63774), and the preamble to the final rule promulgated September 4, 1992 (57 FR 40792) for further background and information on the OCS regulations.

SIP. Inclusion in the OCS rule does not imply that a rule meets the requirements of the Act for SIP approval, nor does it imply that the rule will be approved by EPA for inclusion in the SIP.

II. EPA's Evaluation

A. What Criteria Was Used To Evaluate Rules Submitted for Update of 40 CFR Part 55?

In updating 40 CFR part 55, EPA reviewed the rules submitted for inclusion in part 55 to ensure that they are rationally related to the attainment or maintenance of federal or state ambient air quality standards or part C of title I of the Act, that they are not designed expressly to prevent exploration and development of the OCS and that they are applicable to OCS sources. 40 CFR 55.1. EPA has also evaluated the rules to ensure they are not arbitrary or capricious. 40 CFR 55.12 (e). In addition, EPA has excluded administrative or procedural rules,[2] and requirements that regulate toxics which are not related to the attainment and maintenance of federal and state ambient air quality standards.

B. What Rule Requirements Were Submitted for Update of 40 CFR Part 55?

1. After review of the rules submitted by South Coast AQMD against the criteria set forth above and in 40 CFR part 55, EPA is proposing to make the following rule revisions applicable to OCS sources for which the South Coast AQMD is designated as the COA:

Rule No.	Rule names	Adoption date
102	Definition of Terms	04/09/99
210	Applications and Regulation II—List and Criteria Identifying Information required of Applicants Seeking a Permit to Construct from the SCAQMD.	04/10/98
218	Continuous Emission Monitoring	05/14/99
219	Equipment Not Requiring a Permit Pursuant to Regulation II	05/19/00
301	Permit Fees (except (e)(6) and Table IV)	05/19/00
304	Equipment, Materials, and Ambient Air Analyses	05/19/00
304.1	Analyses Fees	05/19/00
306	Plan Fees	05/19/00
309	Fees for Regulation XVI	05/19/00
401	Visible Emissions	09/11/98
403	Fugitive Dust	12/11/98
403.1	Wind Entertainment of Fugitive Dust	06/16/00
431.1	Sulfur Content of Gaseous Fuels	06/12/98
465	Vacuum Producing Devices or Systems	08/13/99
Reg. IX	New Source Performance Standards	05/19/00
1107	Coating of Metal Parts and Products	08/14/98
1113	Architectural Coatings	05/14/99
1121	Control of Nitrogen Oxides from Residential-Type, Natural Gas-Fired Water Heaters	12/10/99
1146	Emissions of Oxides of Nitrogen from Industrial, Institutional, and Commercial Boilers, Steam Generators, and Process Heaters.	06/16/00
1171	Solvent Cleaning Operations	10/08/99
1610	Old-Vehicle Scrapping	02/12/99
1612	Credits for Clean On-Road Vehicles	07/10/98
1620	Credits for Clean Off-Road Mobile Equipment	07/10/98
1701	General	08/13/99
1702	Definitions	08/13/99
1704	Exemptions	08/13/99
1706	Emission Calculations	08/13/99
2005	New Source Review for RECLAIM except (i)	04/09/99
2011	Requirements for Monitoring, Reporting, and Recordkeeping for Oxides of Sulfur (SO_X) Emissions	04/09/99
2012	Requirements for Monitoring, Reporting, and Recordkeeping for Oxides of Nitrogen (NO_X) Emissions	04/09/99
The following new rules were submitted and are proposed for incorporation:		
112	Definition of Minor Violation and Guidelines for Issuance of Notice to Comply	11/13/98
218.1	Continuous Emission Monitoring Performance Specifications	05/14/99
218.1	Attachment A—Supplemental and Alternative CEMS Performance Requirements	05/14/99
2506	Area Source Credits for NO_X and SO_X	12/10/99
The following rules were submitted, but will not be incorporated because they are administrative:		
216	Appeals	05/19/00
222	Filing Requirements for Specific Emission Sources Not Requiring a Permit Pursuant to Regulation II	05/19/00
303	Hearing Board Fees	05/19/00
311	Air Quality Investment Program (AQIP) Fees	05/19/00

2. After review of the rules submitted by Ventura County APCD against the criteria set forth above and in 40 CFR part 55, EPA is proposing to make the following rule revisions applicable to OCS sources for which the Ventura County APCD is designated as the COA:

[2] Each COA which has been delegated the authority to implement and enforce part 55, will use its administrative and procedural rules as onshore. However, in those instances where EPA has not delegated authority to implement and enforce part 55, EPA will use its own administrative and procedural requirements to implement the substantive requirements. 40 CFR 55.14 (c)(4).

Rule No.	Rule name	Adoption date
42	Permit Fees	06/13/00
74.15.1	Boilers, Steam Generators, and Process Heaters	06/13/00

III. Administrative Requirements

A. Executive Order 12866

The Office of Management and Budget (OMB) has exempted this regulatory action from Executive Order 12866, Regulatory Planning and Review.

B. Executive Order 13045

Executive Order 13045, entitled Protection of Children from Environmental Health Risks and Safety Risks (62 FR 19885, April 23, 1997), applies to any rule that: (1) is determined to be ''economically significant'' as defined under Executive Order 12866, and (2) concerns an environmental health or safety risk that EPA has reason to believe may have a disproportionate effect on children. If the regulatory action meets both criteria, the Agency must evaluate the environmental health or safety effects of the planned rule on children, and explain why the planned regulation is preferable to other potentially effective and reasonably feasible alternatives considered by the Agency.

This rule is not subject to Executive Order 13045 because it does not involve decisions intended to mitigate environmental health or safety risks.

C. Executive Order 13084

Under Executive Order 13084, Consultation and Coordination with Indian Tribal Governments, EPA may not issue a regulation that is not required by statute, that significantly or uniquely affects the communities of Indian tribal governments, and that imposes substantial direct compliance costs on those communities, unless the Federal government provides the funds necessary to pay the direct compliance costs incurred by the tribal governments, or EPA consults with those governments. If EPA complies by consulting, Executive Order 13084 requires EPA to provide to the OMB in a separately identified section of the preamble to the rule, a description of the extent of EPA's prior consultation with representatives of affected tribal governments, a summary of the nature of their concerns, and a statement supporting the need to issue the regulation. In addition, Executive Order 13084 requires EPA to develop an effective process permitting elected officials and other representatives of Indian tribal governments ''to provide meaningful and timely input in the development of regulatory policies on matters that significantly or uniquely affect their communities.''

Today's proposed rule does not significantly or uniquely affect the communities of Indian tribal governments. Accordingly, the requirements of section 3(b) of Executive Order 13084 do not apply to this proposed rule.

D. Executive Order 13132

Executive Order 13132, entitled Federalism (64 FR 43255, August 10, 1999) revokes and replaces Executive Orders 12612, Federalism and 12875, Enhancing the Intergovernmental Partnership. Executive Order 13132 requires EPA to develop an accountable process to ensure ''meaningful and timely input by State and local officials in the development of regulatory policies that have federalism implications.'' ''Policies that have federalism implications'' is defined in the Executive Order to include regulations that have ''substantial direct effects on the States, on the relationship between the national government and the States, or on the distribution of power and responsibilities among the various levels of government.'' Under Executive Order 13132, EPA may not issue a regulation that has federalism implications, that imposes substantial direct compliance costs, and that is not required by statute, unless the Federal government provides the funds necessary to pay the direct compliance costs incurred by State and local governments, or EPA consults with State and local officials early in the process of developing the proposed regulation. EPA also may not issue a regulation that has federalism implications and that preempts State law unless the Agency consults with State and local officials early in the process of developing the proposed regulation.

This proposed rule will not have substantial direct effects on the States, on the relationship between the national government and the States, or on the distribution of power and responsibilities among the various levels of government, as specified in Executive Order 13132, because it merely acts on a state rule implementing a federal standard, and does not alter the relationship or the distribution of power and responsibilities established in the Clean Air Act. Thus, the requirements of section 6 of the Executive Order do not apply to this proposed rule.

E. Regulatory Flexibility Act

The Regulatory Flexibility Act (RFA) generally requires an agency to conduct a regulatory flexibility analysis of any rule subject to notice and comment rulemaking requirements unless the agency certifies that the rule will not have a significant economic impact on a substantial number of small entities. Small entities include small businesses, small not-for-profit enterprises, and small governmental jurisdictions.

This proposed rule will not have a significant impact on a substantial number of small entities because SIP approvals under section 110 and subchapter I, part D of the Clean Air Act do not create any new requirements but simply act on requirements that the State is already imposing. Therefore, because the Federal SIP approval does not create any new requirements, I certify that this action will not have a significant economic impact on a substantial number of small entities.

F. Unfunded Mandates

Under section 202 of the Unfunded Mandates Reform Act of 1995 (''Unfunded Mandates Act''), signed into law on March 22, 1995, EPA must prepare a budgetary impact statement to accompany any proposed or final rule that includes a Federal mandate that may result in estimated costs to State, local, or tribal governments in the aggregate; or to private sector, of $100 million or more. Under section 205, EPA must select the most cost-effective and least burdensome alternative that achieves the objectives of the rule and is consistent with statutory requirements. Section 203 requires EPA to establish a plan for informing and advising any small governments that may be significantly or uniquely impacted by the rule.

EPA has determined that the proposed action does not include a Federal mandate that may result in estimated costs of $100 million or more to either State, local, or tribal governments in the aggregate, or to the private sector. This proposed Federal action acts on pre-existing requirements under State or local law, and imposes

no new requirements. Accordingly, no additional costs to State, local, or tribal governments, or to the private sector, result from this action.

G. National Technology Transfer and Advancement Act

Section 12 of the National Technology Transfer and Advancement Act (NTTAA) of 1995 requires Federal agencies to evaluate existing technical standards when developing a new regulation. To comply with NTTAA, EPA must consider and use ''voluntary consensus standards'' (VCS) if available and applicable when developing programs and policies unless doing so would be inconsistent with applicable law or otherwise impractical.

EPA believes that VCS are inapplicable to today's proposed action because it does not require the public to perform activities conducive to the use of VCS.

List of Subjects in 40 CFR Part 55

Administrative practice and procedures, Air pollution control, Hydrocarbons, Incorporation by reference, Intergovernmental relations, Nitrogen dioxide, Nitrogen oxides, Outer continental shelf, Ozone, Particulate matter, Permits, Reporting and recordkeeping requirements, Sulfur oxides.

Dated: November 20, 2000.

Felicia Marcus,

Regional Administrator, Region IX.

Title 40 of the Code of Federal Regulations, part 55, is proposed to be amended as follows:

PART 55—[AMENDED]

1. The authority citation for part 55 continues to read as follows:

Authority: Section 328 of the Clean Air Act (42 U.S.C. 7401 *et seq.*) as amended by Public Law 101–549.

2. Section 55.14 is proposed to be amended by revising paragraphs (e)(3)(ii)(G) and (e)(3)(ii)(H) to read as follows:

§ 55.14 Requirements that apply to OCS sources located within 25 miles of States' seaward boundaries, by State.

* * * * *

(e) * * *

(3) * * *

(ii) * * *

(G) *South Coast Air Quality Management District Requirements Applicable to OCS Sources.*

(H) *Ventura County Air Pollution Control District Requirements Applicable to OCS Sources.*

* * * * *

Appendix to Part 55—[Amended]

3. Appendix A to 40 CFR Part 55 is proposed to be amended by revising paragraph (b)(7) and (b)(8) under the heading ''California'' to read as follows:

Appendix A to 40 CFR Part 55—Listing of State and Local Requirements Incorporated by Reference Into Part 55, by State.

* * * * *

California.

* * * * *

(b) Local requirements.

* * * * *

(7) *The following requirements are contained in South Coast Air Quality Management District Requirements Applicable to OCS Sources* (Part I, II and III):

Rule 102 Definition of Terms (Adopted 4/9/99)
Rule 103 Definition of Geographical Areas (Adopted 1/9/76)
Rule 104 Reporting of Source Test Data and Analyses (Adopted 1/9/76)
Rule 108 Alternative Emission Control Plans (Adopted 4/6/90)
Rule 109 Recordkeeping for Volatile Organic Compound Emissions (Adopted 3/6/92)
Rule 112 Definition of Minor Violation and Guidelines for Issuance of Notice to Comply (Adopted 11/13/98)
Rule 118 Emergencies (Adopted 12/7/95)
Rule 201 Permit to Construct (Adopted 1/5/90)
Rule 201.1 Permit Conditions in Federally Issued Permits to Construct (Adopted 1/5/90)
Rule 202 Temporary Permit to Operate (Adopted 5/7/76)
Rule 203 Permit to Operate (Adopted 1/5/90)
Rule 204 Permit Conditions (Adopted 3/6/92)
Rule 205 Expiration of Permits to Construct (Adopted 1/5/90)
Rule 206 Posting of Permit to Operate (Adopted 1/5/90)
Rule 207 Altering or Falsifying of Permit (Adopted 1/9/76)
Rule 208 Permit for Open Burning (Adopted 1/5/90)
Rule 209 Transfer and Voiding of Permits (Adopted 1/5/90)
Rule 210 Applications and Regulation II—List and Criteria Identifying Information required of Applicants Seeking a Permit to Construct from the SCAQMD (Adopted 4/10/98)
Rule 211 Definition of Minor Violation and Guidelines for Issuance of Notice to Comply (Adopted 11/13/98)
Rule 212 Standards for Approving Permits (Adopted 12/7/95) except (c)(3) and (e)
Rule 214 Denial of Permits (Adopted 1/5/90)
Rule 217 Provisions for Sampling and Testing Facilities (Adopted 1/5/90)
Rule 218 Continuous Emission Monitoring (Adopted 5/14/99)
Rule 218.1 Continuous Emission Monitoring Performance Specifications (Adopted 5/14/99)
Rule 218.1 Attachment A—Supplemental and Alternative CEMS Performance Requirements (Adopted 5/14/99)
Rule 219 Equipment Not Requiring a Written Permit Pursuant to Regulation II (Adopted 5/19/00)
Rule 220 Exemption—Net Increase in Emissions (Adopted 8/7/81)
Rule 221 Plans (Adopted 1/4/85)
Rule 301 Permit Fees (Adopted 5/19/00) except (e)(6)and Table IV
Rule 304 Equipment, Materials, and Ambient Air Analyses (Adopted 5/19/00)
Rule 304.1 Analyses Fees (Adopted 5/19/00)
Rule 305 Fees for Acid Deposition (Adopted 10/4/91)
Rule 306 Plan Fees (Adopted 5/19/00)
Rule 309 Fees for Regulation XVI Plans (Adopted 5/19/00)
Rule 401 Visible Emissions (Adopted 9/11/98)
Rule 403 Fugitive Dust (Adopted 12/11/98)
Rule 403.1 Wind Entertainment of Fugitive Dust (06/16/00)
Rule 404 Particulate Matter—Concentration (Adopted 2/7/86)
Rule 405 Solid Particulate Matter—Weight (Adopted 2/7/86)
Rule 407 Liquid and Gaseous Air Contaminants (Adopted 4/2/82)
Rule 408 Circumvention (Adopted 5/7/76)
Rule 409 Combustion Contaminants (Adopted 8/7/81)
Rule 429 Start-Up and Shutdown Provisions for Oxides of Nitrogen (Adopted 12/21/90)
Rule 430 Breakdown Provisions, (a) and (e) only (Adopted 7/12/96)
Rule 431.1 Sulfur Content of Gaseous Fuels (Adopted 6/12/98)
Rule 431.2 Sulfur Content of Liquid Fuels (Adopted 5/4/90)
Rule 431.3 Sulfur Content of Fossil Fuels (Adopted 5/7/76)
Rule 441 Research Operations (Adopted 5/7/76)
Rule 442 Usage of Solvents (Adopted 3/5/82)
Rule 444 Open Fires (Adopted 10/2/87)
Rule 463 Organic Liquid Storage (Adopted 3/11/94)
Rule 465 Vacuum Producing Devices or Systems (Adopted 8/13/99)
Rule 468 Sulfur Recovery Units (Adopted 10/8/76)
Rule 473 Disposal of Solid and Liquid Wastes (Adopted 5/7/76)
Rule 474 Fuel Burning Equipment-Oxides of Nitrogen (Adopted 12/4/81)
Rule 475 Electric Power Generating Equipment (Adopted 8/7/78)
Rule 476 Steam Generating Equipment (Adopted 10/8/76)
Rule 480 Natural Gas Fired Control Devices (Adopted 10/7/77) Addendum to Regulation IV (Effective 1977)
Rule 518 Variance Procedures for Title V Facilities (Adopted 8/11/95)
Rule 518.1 Permit Appeal Procedures for Title V Facilities (Adopted 8/11/95)
Rule 518.2 Federal Alternative Operating Conditions (Adopted 1/12/96)
Rule 701 Air Pollution Emergency Contingency Actions (Adopted 6/13/97)
Rule 702 Definitions (Adopted 7/11/80)

Rule 704 Episode Declaration (Adopted 7/9/82)
Rule 707 Radio—Communication System (Adopted 7/11/80)
Rule 708 Plans (Adopted 7/9/82)
Rule 708.1 Stationary Sources Required to File Plans (Adopted 4/4/80)
Rule 708.2 Content of Stationary Source Curtailment Plans (Adopted 4/4/80)
Rule 708.4 Procedural Requirements for Plans (Adopted 7/11/80)
Rule 709 First Stage Episode Actions (Adopted 7/11/80)
Rule 710 Second Stage Episode Actions (Adopted 7/11/80)
Rule 711 Third Stage Episode Actions (Adopted 7/11/80)
Rule 712 Sulfate Episode Actions (Adopted 7/11/80)
Rule 715 Burning of Fossil Fuel on Episode Days (Adopted 8/24/77)
Regulation IX—New Source Performance Standards (Adopted 5/19/00)
Rule 1106 Marine Coatings Operations (Adopted 1/13/95)
Rule 1107 Coating of Metal Parts and Products (Adopted 8/14/98)
Rule 1109 Emissions of Oxides of Nitrogen for Boilers and Process Heaters in Petroleum Refineries (Adopted 8/5/88)
Rule 1110 Emissions from Stationary Internal Combustion Engines (Demonstration) (Adopted 11/14/97)
Rule 1110.1 Emissions from Stationary Internal Combustion Engines (Adopted 10/4/85)
Rule 1110.2 Emissions from Gaseous-and Liquid Fueled Internal Combustion Engines (Adopted 11/14/97)
Rule 1113 Architectural Coatings (Adopted 5/14/99)
Rule 1116.1 Lightering Vessel Operations-Sulfur Content of Bunker Fuel (Adopted 10/20/78)
Rule 1121 Control of Nitrogen Oxides from Residential-Type Natural Gas-Fired Water Heaters (Adopted 12/10/99)
Rule 1122 Solvent Degreasers (Adopted 7/11/97)
Rule 1123 Refinery Process Turnarounds (Adopted 12/7/90)
Rule 1129 Aerosol Coatings (rescinded 3/8/96)
Rule 1134 Emissions of Oxides of Nitrogen from Stationary Gas Turbines (Adopted 8/8/97)
Rule 1136 Wood Products Coatings (Adopted 6/14/96)
Rule 1140 Abrasive Blasting (Adopted 8/2/85)
Rule 1142 Marine Tank Vessel Operations (Adopted 7/19/91)
Rule 1146 Emissions of Oxides of Nitrogen from Industrial, Institutional, and Commercial Boilers, Steam Generators, and Process Heaters (Adopted 6/16/00)
Rule 1146.1 Emission of Oxides of Nitrogen from Small Industrial, Institutional, and Commercial Boilers, steam Generators, and Process Heaters (Adopted 5/13/94)
Rule 1146.2 Emissions of Oxides of Nitrogen from Large Water Heaters and Small Boilers (Adopted 1/9/98)
Rule 1148 Thermally Enhanced Oil Recovery Wells (Adopted 11/5/82)
Rule 1149 Storage Tank Degassing (Adopted 7/14/95)
Rule 1168 Adhesive Applications (Adopted 2/13/98)
Rule 1171 Solvent Cleaning Operations (Adopted 10/8/99)
Rule 1173 Fugitive Emissions of Volatile Organic Compounds (Adopted 5/13/94)
Rule 1176 VOC Emissions from Wastewater Systems (Adopted 9/13/96)
Rule 1301 General (Adopted 12/7/95)
Rule 1302 Definitions (Adopted 12/7/95)
Rule 1303 Requirements (Adopted 5/10/96)
Rule 1304 Exemptions (Adopted 6/14/96)
Rule 1306 Emission Calculations (Adopted 6/14/96)
Rule 1313 Permits to Operate (Adopted 12/7/95)
Rule 1403 Asbestos Emissions from Demolition/Renovation Activities (Adopted 4/8/94)
Rule 1605 Credits for the Voluntary Repair of On-Road Vehicles Identified Through Remote Sensing Devices (Adopted 10/11/96)
Rule 1610 Old-Vehicle Scrapping (Adopted 2/12/99)
Rule 1612 Credits for Clean On-Road Vehicles (Adopted 7/10/98)
Rule 1620 Credits for Clean Off-Road Mobile Equipment (Adopted 7/10/98)
Rule 1701 General (Adopted 8/13/99)
Rule 1702 Definitions (Adopted 8/13/99)
Rule 1703 PSD Analysis (Adopted 10/7/88)
Rule 1704 Exemptions (Adopted 8/13/99)
Rule 1706 Emission Calculations (Adopted 8/13/99)
Rule 1713 Source Obligation (Adopted 10/7/88)
Regulation XVII Appendix (effective 1977)
Rule 1901 General Conformity (Adopted 9/9/94)
Rule 2000 General (Adopted 4/11/97)
Rule 2001 Applicability (Adopted 2/14/97)
Rule 2002 Allocations for Oxides of Nitrogen (NO_X) and Oxides of Sulfur (SO_X) Emissions (Adopted 2/14/97)
Rule 2004 Requirements (Adopted 7/12/96) except (l)
Rule 2005 New Source Review for RECLAIM (Adopted 4/9/99) except (i)
Rule 2006 Permits (Adopted 12/7/95)
Rule 2007 Trading Requirements (Adopted 12/7/95)
Rule 2008 Mobile Source Credits (Adopted 10/15/93)
Rule 2010 Administrative Remedies and Sanctions (Adopted 10/15/93)
Rule 2011 Requirements for Monitoring, Reporting, and Recordkeeping for Oxides of Sulfur (SO_X) Emissions (Adopted 4/9/99)
Appendix A Volume IV—(Protocol for oxides of sulfur) (Adopted 3/10/95)
Rule 2012 Requirements for Monitoring, Reporting, and Recordkeeping for Oxides of Nitrogen (NO_X) Emissions (Adopted 4/9/99)
Appendix A Volume V—(Protocol for oxides of nitrogen) (Adopted 3/10/95)
Rule 2015 Backstop Provisions (Adopted 2/14/97) except (B)(1)(G) and (b)(3)(B)
Rule 2100 Registration of Portable Equipment (Adopted 7/11/97)
Rule 2506 Area Source Credits for NO_X and SO_X (Adopted 12/10/99)
XXX Title V Permits
Rule 3000 General (Adopted 11/14/97)
Rule 3001 Applicability (Adopted 11/14/97)
Rule 3002 Requirements (Adopted 11/14/97)
Rule 3003 Applications (Adopted 11/14/97)
Rule 3004 Permit Types and Content (Adopted 11/14/97)
Rule 3005 Permit Revisions (Adopted 11/14/97)
Rule 3006 Public Participation (Adopted 11/14/97)
Rule 3007 Effect of Permit (Adopted 10/8/93)
XXXI Acid Rain Permit Program (Adopted 2/10/95)

(8) The following requirements are contained in *Ventura County Air Pollution Control District Requirements Applicable to OCS Sources:*

Rule 2 Definitions (Adopted 11/10/98)
Rule 5 Effective Date (Adopted 5/23/72)
Rule 6 Severability (Adopted 11/21/78)
Rule 7 Zone Boundaries (Adopted 6/14/77)
Rule 10 Permits Required (Adopted 6/13/95)
Rule 11 Definition for Regulation II (Adopted 6/13/95)
Rule 12 Application for Permits (Adopted 6/13/95)
Rule 13 Action on Applications for an Authority to Construct (Adopted 6/13/95)
Rule 14 Action on Applications for a Permit to Operate (Adopted 6/13/95)
Rule 15.1 Sampling and Testing Facilities (Adopted 10/12/93)
Rule 16 BACT Certification (Adopted 6/13/95)
Rule 19 Posting of Permits (Adopted 5/23/72)
Rule 20 Transfer of Permit (Adopted 5/23/72)
Rule 23 Exemptions from Permits (Adopted 7/9/96)
Rule 24 Source Recordkeeping, Reporting, and Emission Statements (Adopted 9/15/92)
Rule 26 New Source Review (Adopted 10/22/91)
Rule 26.1 New Source Review—Definitions (Adopted 1/13/98)
Rule 26.2 New Source Review—Requirements (Adopted 1/13/98)
Rule 26.6 New Source Review—Calculations (Adopted 1/13/98)
Rule 26.8 New Source Review—Permit To Operate (Adopted 10/22/91)
Rule 26.10 New Source Review—PSD (Adopted 1/13/98)
Rule 28 Revocation of Permits (Adopted 7/18/72)
Rule 29 Conditions on Permits (Adopted 10/22/91)
Rule 30 Permit Renewal (Adopted 5/30/89)
Rule 32 Breakdown Conditions: Emergency Variances, A., B.1., and D. only. (Adopted 2/20/79)
Rule 33 Part 70 Permits—General (Adopted 10/12/93)
Rule 33.1 Part 70 Permits—Definitions (Adopted 10/12/93)
Rule 33.2 Part 70 Permits—Application Contents (Adopted 10/12/93)
Rule 33.3 Part 70 Permits—Permit Content (Adopted 10/12/93)
Rule 33.4 Part 70 Permits—Operational Flexibility (Adopted 10/12/93)

Rule 33.5 Part 70 Permits—Time frames for Applications, Review and Issuance (Adopted 10/12/93)
Rule 33.6 Part 70 Permits—Permit Term and Permit Reissuance (Adopted 10/12/93)
Rule 33.7 Part 70 Permits—Notification (Adopted 10/12/93)
Rule 33.8 Part 70 Permits—Reopening of Permits (Adopted 10/12/93)
Rule 33.9 Part 70 Permits—Compliance Provisions (Adopted 10/12/93)
Rule 33.10 Part 70 Permits—General Part 70 Permits (Adopted 10/12/93)
Rule 34 Acid Deposition Control (Adopted 3/14/95)
Rule 35 Elective Emission Limits (Adopted 11/12/96)
Rule 36 New Source Review—Hazardous Air Pollutants (Adopted 10/6/98)
Rule 42 Permit Fees (Adopted 6/13/00)
Rule 44 Exemption Evaluation Fee (Adopted 9/10/96)
Rule 45 Plan Fees (Adopted 6/19/90)
Rule 47 Source Test, Emission Monitor, and Call-Back Fees (Adopted 6/22/99)
Rule 45.2 Asbestos Removal Fees (Adopted 8/4/92)
Rule 50 Opacity (Adopted 2/20/79)
Rule 52 Particulate Matter-Concentration (Adopted 5/23/72)
Rule 53 Particulate Matter-Process Weight (Adopted 7/18/72)
Rule 54 Sulfur Compounds (Adopted 6/14/94)
Rule 56 Open Fires (Adopted 3/29/94)
Rule 57 Combustion Contaminants-Specific (Adopted 6/14/77)
Rule 60 New Non-Mobile Equipment-Sulfur Dioxide, Nitrogen Oxides, and Particulate Matter (Adopted 7/8/72)
Rule 62.7 Asbestos—Demolition and Renovation (Adopted 6/16/92)
Rule 63 Separation and Combination of Emissions (Adopted 11/21/78)
Rule 64 Sulfur Content of Fuels (Adopted 4/13/99)
Rule 67 Vacuum Producing Devices (Adopted 7/5/83)
Rule 68 Carbon Monoxide (Adopted 6/14/77)
Rule 71 Crude Oil and Reactive Organic Compound Liquids (Adopted 12/13/94)
Rule 71.1 Crude Oil Production and Separation (Adopted 6/16/92)
Rule 71.2 Storage of Reactive Organic Compound Liquids (Adopted 9/26/89)
Rule 71.3 Transfer of Reactive Organic Compound Liquids (Adopted 6/16/92)
Rule 71.4 Petroleum Sumps, Pits, Ponds, and Well Cellars (Adopted 6/8/93)
Rule 71.5 Glycol Dehydrators (Adopted 12/13/94)
Rule 72 New Source Performance Standards (NSPS) (Adopted 9/10/96)
Rule 74 Specific Source Standards (Adopted 7/6/76)
Rule 74.1 Abrasive Blasting (Adopted 11/12/91)
Rule 74.2 Architectural Coatings (Adopted 08/11/92)
Rule 74.6 Surface Cleaning and Degreasing (Adopted 11/10/98)
Rule 74.6.1 Cold Cleaning Operations (Adopted 7/9/96)
Rule 74.6.2 Batch Loaded Vapor Degreasing Operations (Adopted 7/9/96)
Rule 74.7 Fugitive Emissions of Reactive Organic Compounds at Petroleum Refineries and Chemical Plants (Adopted 10/10/95)
Rule 74.8 Refinery Vacuum Producing Systems, Waste-water Separators and Process Turnarounds (Adopted 7/5/83)
Rule 74.9 Stationary Internal Combustion Engines (Adopted 12/21/93)
Rule 74.10 Components at Crude Oil Production Facilities and Natural Gas Production and Processing Facilities (Adopted 3/10/95)
Rule 74.11 Natural Gas-Fired Residential Water Heaters-Control of NO_X (Adopted 4/9/85)
Rule 74.11.1 Large Water Heaters and Small Boilers (Adopted 9/14/99)
Rule 74.12 Surface Coating of Metal Parts and Products (Adopted 9/10/96)
Rule 74.15 Boilers, Steam Generators and Process Heaters (Adopted 11/8/94)
Rule 74.15.1 Boilers, Steam Generators and Process Heaters (Adopted 6/13/00)
Rule 74.16 Oil Field Drilling Operations (Adopted 1/8/91)
Rule 74.20 Adhesives and Sealants (Adopted 1/14/97)
Rule 74.23 Stationary Gas Turbines (Adopted 10/10/95)
Rule 74.24 Marine Coating Operations (Adopted 9/10/96)
Rule 74.24.1 Pleasure Craft Coating and Commercial Boatyard Operations (Adopted 11/10/98)
Rule 74.26 Crude Oil Storage Tank Degassing Operations (Adopted 11/8/94)
Rule 74.27 Gasoline and ROC Liquid Storage Tank Degassing Operations (Adopted 11/8/94)
Rule 74.28 Asphalt Roofing Operations (Adopted 5/10/94)
Rule 74.30 Wood Products Coatings (Adopted 9/10/96)
Rule 75 Circumvention (Adopted 11/27/78)
Rule 100 Analytical Methods (Adopted 7/18/72)
Rule 101 Sampling and Testing Facilities (Adopted 5/23/72)
Rule 102 Source Tests (Adopted 11/21/78)
Rule 103 Continuous Monitoring Systems (Adopted 2/9/99)
Rule 154 Stage 1 Episode Actions (Adopted 9/17/91)
Rule 155 Stage 2 Episode Actions (Adopted 9/17/91)
Rule 156 Stage 3 Episode Actions (Adopted 9/17/91)
Rule 158 Source Abatement Plans (Adopted 9/17/91)
Rule 159 Traffic Abatement Procedures (Adopted 9/17/91)
Rule 220 General Conformity (Adopted 5/9/95)
Rule 230 Notice to Comply (Adopted 11/9/99)

* * * * *

[FR Doc. 00–31468 Filed 12–8–00; 8:45 am]
BILLING CODE 6560–50–P

FEDERAL COMMUNICATIONS COMMISSION

47 CFR Part 73

[DA 00–2714; MM Docket No. 00–120; RM–9902]

Radio Broadcasting Services; Meeker and Craig, CO

AGENCY: Federal Communications Commission.

ACTION: Proposed rule; denial.

SUMMARY: This document denies a petition filed on behalf of Western Slope Communications, L.L.C., permittee of Station KAYW, Channel 251C, Meeker, Colorado, requesting the reallotment of Channel 251C from Meeker to Craig, Colorado, and modification of the authorization for Station KAYW accordingly. *See* 65 FR 45017, July 20, 2000. The reallotment proposal is denied as it would remove the sole local potential service at Meeker, and would not result in a preferential arrangement of allotments pursuant to the Commission's allotment priorities. *See Modification of FM and TV Authorizations to Specify a New Community of License*, 4 FCC Rcd 4870 (1989), *recon. granted in part*, 5 FCC Rcd 7094 (1990); and *Revision of FM Assignment Policies and Procedures*, 90 FCC 2d 88 (1982).

ADDRESSES: Federal Communications Commission, Washington, DC 20554.

FOR FURTHER INFORMATION CONTACT: Nancy Joyner or Jeffrey Sutherland (engineering issues), Mass Media Bureau, (202) 418–2180.

SUPPLEMENTARY INFORMATION: This is a synopsis of the Commission's Report and Order, MM Docket No. 00–120, adopted November 22, 2000, and released December 1, 2000. The full text of this Commission decision is available for inspection and copying during normal business hours in the FCC's Reference Information Center (Room CY–A257), 445 Twelfth Street, SW., Washington, DC. The complete text of this decision may also be purchased from the Commission's copy contractor, International Transcription Service, Inc., 1231 20th Street, NW., Washington, DC 20036, (202) 857–3800.

Federal Communications Commission.

John A. Karousos,

Chief, Allocations Branch, Policy and Rules Division, Mass Media Bureau.

[FR Doc. 00–31400 Filed 12–8–00; 8:45 am]
BILLING CODE 6712–01–U

DEPARTMENT OF TRANSPORTATION

National Highway Traffic Safety Administration

49 CFR Part 571

[Docket No. NHTSA–8446]

TREAD Insurance Study

AGENCY: National Highway Traffic Safety Administration (NHTSA), DOT.

ACTION: Request for comments.

SUMMARY: This notice announces a request for comments to help the agency conduct the study of insurance data mandated by Congress in the Transportation Recall Enhancement, Accountability, and Documentation (TREAD) Act (Pub. L. 106–414) signed November 1, 2000.

DATES: Comments must be received no later than January 5, 2001.

ADDRESSES: Submit written comments to the Docket Management System, U.S. Department of Transportation, PL 401, 400 Seventh Street, SW, Washington, DC 20590–0001. Comments should refer to the Docket Number (NHTSA–8446) and be submitted in two copies. If you wish to receive confirmation of receipt of your written comments, include a self-addressed, stamped postcard.

Comments may also be submitted to the docket electronically by logging onto the Docket Management System website at *http://dms.dot.gov.* Click on ''Help & Information'' to obtain instructions for filing the comment electronically. In every case, the comment should refer to the docket number.

The Docket Management System is located on the Plaza level of the Nassif Building at the Department of Transportation at the above address. You can review public dockets there between the hours of 9 a.m. and 5 p.m., Monday through Friday, except Federal holidays. You can also review comments on-line at the DOT Docket Management System web site at *http://dms.dot.gov/.*

FOR FURTHER INFORMATION CONTACT: Ms. Jane Dion, Office of Plans and Policy, NPP–01, National Highway Traffic Safety Administration, Room 5208, 400 Seventh Street, SW, Washington, DC 20590. Telephone: 202–366–6779. Email: *jdion@nhtsa.dot.gov.*

SUPPLEMENTARY INFORMATION: Section 3(d) of the Transportation Recall Enhancement, Accountability, and Documentation (TREAD) Act (Pub. L. 106–414) requires NHTSA to conduct a study to determine the feasibility and utility of collecting data from insurance companies on a regular basis to help the agency in its defects investigation efforts. NHTSA is seeking input from the public to assist the agency with the study. Comments received will be evaluated and incorporated, as appropriate, into the study.

How Do I Prepare and Submit Comments?

Your comments must be written and in English. To ensure that your comments are correctly filed in the Docket, please include the Docket number of this document (NHTSA–8446) in your comments.

Please send two paper copies of your comments to Docket Management or submit them electronically. The mailing address is U. S. Department of Transportation Docket Management, Room PL–401, 400 Seventh Street, SW, Washington, DC 20590. If you submit your comments electronically, log onto the Docket Management System website at http://dms.dot.gov and click on ''Help & Information'' or ''Help/Info'' to obtain instructions.

How Can I Be Sure That My Comments Were Received?

If you wish Docket Management to notify you upon its receipt of your comments, enclose a self-addressed, stamped postcard in the envelope containing your comments. Upon receiving your comments, Docket Management will return the postcard by mail.

How Do I Submit Confidential Business Information?

If you wish to submit any information under a claim of confidentiality, send three copies of your complete submission, including the information you claim to be confidential business information, to the Office of Chief Counsel, NCC–30, National Highway Traffic Safety Administration, Room 5219, 400 Seventh Street, SW, Washington, DC 20590. Include a cover letter supplying the information specified in our confidential business information regulation (49 CFR Part 512).

In addition, send two copies from which you have deleted the claimed confidential business information to Docket Management, Room PL–401, 400 Seventh Street, SW, Washington, DC 20590.

Will the Agency Consider Late Comments?

In our response, we will consider all comments that Docket Management receives before the close of business on the comment closing date indicated above under **DATES**. To the extent possible, we will also consider comments that Docket Management receives after that date.

How Can I Read the Comments Submitted by Other People?

You may read the comments by visiting Docket Management in person at Room PL–401, 400 Seventh Street, SW, Washington, DC from 10:00 a.m. to 5:00 p.m., Monday through Friday.

You may also see the comments on the Internet by taking the following steps:

a. Go to the Docket Management System (DMS) Web page of the Department of Transportation *(http://dms.dot.gov).*

b. On that page, click on ''search.''

c. On the next page *((http://dms.dot.gov/search/)* type in the four-digit Docket number shown at the beginning of this document (8446). Click on ''search.''

d. On the next page, which contains Docket summary information for the Docket you selected, click on the desired comments. You may also download the comments.

Authority: 49 U.S.C. 30111, 30117, 30168; delegation of authority at 49 CFR 1.50 and 501.8.

Issued on: December 5, 2000.

William H. Walsh,

Associate Administrator for Plans and Policy.

[FR Doc. 00–31446 Filed 12–8–00; 8:45 am]

BILLING CODE 4910–59–P

Notices

Federal Register

Vol. 65, No. 238

Monday, December 11, 2000

This section of the FEDERAL REGISTER contains documents other than rules or proposed rules that are applicable to the public. Notices of hearings and investigations, committee meetings, agency decisions and rulings, delegations of authority, filing of petitions and applications and agency statements of organization and functions are examples of documents appearing in this section.

DEPARTMENT OF AGRICULTURE

Research, Education, and Economics; Research Program on Health and Nutrition Effects of Popular Weight-Loss Diets: Notice of Public Meeting

AGENCY: Department of Agriculture, REE.

ACTION: Notice.

SUMMARY: The Department of Agriculture (USDA) (a) provides notice of a public meeting on the Research Program on Health and Nutrition Effects of Popular Weight-loss Diets (Program) (b) solicits written comments on the Program, and (c) solicits oral comments on the Program. The meeting will be held at the Jefferson Auditorium of the South Agriculture Building, 1400 Independence Avenue, SW, Washington, DC, near the Smithsonian Metro Station. No registration is required to attend the public meeting, but pre-registration is required to provide oral comments at the public meeting. There is no fee to attend or to provide oral comments at the public meeting.

DATES: (a) Written comments can be submitted in hard copy by mail or by fax and must be received by the Agency on or before January 15, 2001. (b) The public meeting to solicit oral comments will be held on January 11, 2001, from 1 p.m. to 5 p.m. E.S.T.

For further information contact: Shanthy A. Bowman, Ph.D., USDA, Agricultural Research Service, 10300 Baltimore Boulevard, Building 005, BARC-West, Beltsville, MD 20705–2350, (301) 504–0619.

SUPPLEMENTARY INFORMATION:

General Information

A. Agenda

The agenda includes, (1) Reporting of Phase I of the USDA research, (2) Prototype of research protocols for Phase II, and (3) Oral testimony.

B. How and to Whom Do I Submit Written Comments?

You may submit written comments in hard copy by January 15, 2001, 5:00 p.m. E.S.T, to Shanthy A. Bowman, Ph.D., USDA, Agricultural Research Service, BHNRC/CNRG, 10300 Baltimore Boulevard, Building 005, Room 125, BARC-West, Beltsville, MD, 20705–2350, (301) 504–0619 (phone), 301–504–3225 (fax).

C. How Do I Register To Present Oral Testimony?

Registration is required to provide oral input at the public meeting on January 11, 2001. Requests to provide oral input at the meeting should be submitted by 5:00 p.m. E.S.T., January 9, 2001, to Shanthy A. Bowman, Ph.D., USDA, Agricultural Research Service, BHNRC/CNRG, 10300 Baltimore Boulevard, Building 005, Room 125, BARC-West, Beltsville, MD, 20705–2350, (301) 504–0619 (phone), 301–504–3225 (fax). Name of the presenter, organization affiliation (if applicable), source of funding (if applicable), and contact phone number are required for registration. There is no fee to attend the meeting and to provide oral testimony. One person per organization will be selected on first come basis. Presentations should be limited to three (3) minutes or less. Registration will also be accepted at the meeting, if time slots are available.

Dated: November 28, 2000.

Eileen T. Kennedy,

Deputy Under Secretary, Research, Education, and Economics,, Department of Agriculture.

[FR Doc. 00–30896 Filed 12–8–00; 8:45 am]

BILLING CODE 3410–03–P

DEPARTMENT OF AGRICULTURE

Forest Service

North Elkhorns Project; Including Timber Harvest and Prescribed Fire. Helena National Forest, Jefferson County, Montana.

AGENCY: Forest Service, USDA.

ACTION: Notice; intent to prepare environmental impact statement.

SUMMARY: The USDA, Forest Service is gathering information and preparing an Environmental Impact Statement (EIS) for the North Elkhorns Vegetation Project located approximately 9 air miles southeast of Helena, Montana.

The Forest Service proposes to thin, using commercial timber harvest, approximately 745 acres in the E–4 Management Area of the Elkhorn Wildlife Management Unit.

The biggest and healthiest trees would remain on the site, and the many scattered aspen stands would be revitalized through a combination of treatments, including some fence construction. The thinning treatment would require construction of about 1 mile of temporary road and reconstruction of about 6.5 miles of existing road. Following thinning, the area would be treated with low intensity fire and the temporary and reconstructed road segments would be returned to contour and revegetated.

The proposal is designed to help restore the full range of wildlife habitats in the Elkhorn Wildlife Management Unit. The project will have other benefits including the reduction of wildfire risk in the urban interface.

The project also would authorize the construction of 1500 feet of non-motorized trail to connect two existing non-motorized trails and formally designate 3.5 miles of existing road which is currently closed to motorized use as part of the non-motorized trail system.

COMMENTS: Comments concerning the proposal should be submitted to the responsible official and received in writing on or before January 25, 2001.

ADDRESSES: The responsible official is Thomas J. Clifford, Forest Supervisor, Helena National Forest, Supervisor's Office, 2880 Skyway Drive, Helena, MT. 59601. Phone: (406) 449–5201.

FOR FURTHER INFORMATION CONTACT: Jodie Canfield, Wildlife Biologist and Interagency Elkhorn Coordinator, Townsend Ranger District, 415 South Front, Townsend, MT 59644. Phone: (406) 266–3425.

SUPPLEMENTARY INFORMATION: The project would occur on National Forest lands of the Helena Ranger District. The activities would take place within portions of Sections 1, 2 and 12 of T.8N., R.3W. and Sections 5, 6 and 7 of T.8N., R.3W., and a portion of Section

31, T.9N., R.3W., Montana Principle Meridian.

The proposed treatments are not within a roadless area, but are within the Elkhorns Wildlife management Unit (within Management Area (E–4) of the Helena Forest Plan). This management area features an emphasis on habitat management for moose, elk and mule deer. The management standards include the implementation of wildlife habitat improvement practices, including prescribed fire and timber manipulation to maintain and enhance aspen and willow regeneration and other forested areas for wildlife habitat. (Helena Forest Plan, page III–90). The decisions to be made, based on this environmental analysis, are whether or not to treat the vegetation at this time, and if so, how would the treatments be accomplished.

This EIS will tier to the Helena Forest Plan Final EIS of April 1986, that provides program goals, objectives, and standards and guidelines for conducting management activities in this area. All activities associated with the proposal will be designed to implement the resource goals and standards identified in the Forest Plan.

The Forest Service is seeking information and comments from Federal, State, and local agencies together with organizations or individuals who may be interested in or affected by the proposed action. The Forest Service invites written comments and suggestions on the issues for the proposal and the area being analyzed. Information received will be used in preparation of the Draft EIS.

Preparation of the EIS will include the following steps:

1. Identification of issues to be analyzed in depth.
2. Identification of additional reasonable alternatives.
3. Identification of potential environmental effects of the alternatives.

Commercial timber harvest will be used to restore important habitat that is currently nonexistant in the Wildlife Management Unit by thinning of individual trees while leaving the largest and healthiest trees on site, and by opening the stand such that fire can be reintroduced with minimal risk of killing the overstory trees. Following harvest, forests will be underburned to stimulate the regeneration of grasses, forbs, aspen and willow.

Alternatives to this proposal will include the ''no action'' alternative, in which none of the proposed treatments would be implemented. Other alternatives will examine variations in the location, amount and method of vegetative management.

The preliminary issues identified are:

1. What wildlife species are benefited? Are there any wildlife species at risk that would be affected?
2. What is the effect of the project on recreation?
3. What effect will be project have on reducing the risk of catastrophic wildfire in the urban interface?
4. What are the risks to nearby landowners relative to logging and burning operations?

The Forest Service will analyze and disclose in the DEIS and FEIS the environmental effects of the proposed action and a reasonable range of alternatives. The DEIS and FEIS will disclose the direct, indirect and cumulative environmental effects of each alternative and its associated site specific mitigation measures.

Public participation is especially important at several points of the analysis. Interested parties may visit with Forest Service officials at any time during the analysis. However, two periods of time are specifically identified for the receipt of comments. The first comment period is during the scoping process when the public is invited to give written comments to the Forest Service within 45 days of the publication of the Notice of Intent. The second review period is during the 45 day review of the DEIS when the public is invited to comment on the DEIS.

The DEIS is expected to be filed with the Environmental Protection Agency (EPA) and available for public review in February 2001. At that time, the EPA will publish a notice of availability of the DEIS in the **Federal Register**.

The comment period on the DEIS will be 45 days from the date the notice of availability is published in the **Federal Register**.

At this early stage in the scoping process, the Forest Service believes it is important to give reviewers notice of several court rulings related to public participation in the environmental review process. First, reviews of DEIS must structure their participation in the environmental review of the proposal so that it is meaningful and alerts an agency to the reviewer's position and contentions. *Vermont Yankee Nuclear Power Corp.* v. *NRDC,* 435 U.S. 519, 553 (1978). Secondly, environmental objections that could be raised at the draft environmental impact statement stage, but that are not raised until after completion of the FEIS may be waived or dismissed by the courts. *City of Angoon* v. *Hodel,* 803 F. 2d 1016, 1022 (9th cir. 1986) and *Wisconsin Heritages, Inc.* v. *Harris,* 490 F. Supp. 1338 (E.D. Wis. 1980). Because of these court rulings, it is very important that those interested in this proposed action participate by the close of the 45-day comment period so that substantive comments and objections are made available to the Forest Service at a time when it can meaningfully consider them and respond to them in the FEIS.

To assist the Forest Service in identifying and considering issues and concerns on the proposed action, comments on the DEIS should be as specific as possible. It is also helpful if comments refer to specific pages or chapters of the draft statement. Comments may also address the adequacy of the DEIS or the merits of the alternatives formulated and discussed in the statement. (Reviewers may wish to refer to the Council on Environmental Quality Regulations for implementing the procedural provisions of the National Environmental Policy Act at 40 CFR 1503.3 in addressing these points.)

After the comment period ends on the DEIS, the comments will be analyzed and considered by the Forest Service in preparing the FEIS. The FEIS is expected to be filed in July 2001.

Dated: November 22, 2000.

Thomas J. Clifford,

Forest Supervisor, Helena National Forest.

[FR Doc. 00–31368 Filed 12–8–00; 8:45 am]

BILLING CODE 3410–11–M

DEPARTMENT OF AGRICULTURE

Forest Service

Maudlow-Toston Post-Fire Salvage, Sale, Townsend Ranger District, Helena National Forest, Broadwater County, Montana

AGENCY: Forest Service, USDA.

ACTION: Notice, intent to prepare environmental impact statement.

SUMMARY: The Forest Service will prepare an Environmental Impact Statement on a proposal to harvest merchantable fire-damaged trees from the Maudlow—Toston wildfire area. The proposed action includes salvage timber harvest in roaded areas and stewardship project timber harvest activities in inventoried roadless areas. No new road construction or reconstruction would be conducted in inventoried roadless areas. In areas outside inventoried roadless areas, existing system roads and a few temporary roads would be used. Only dead or dying trees will be removed. The proposed action will also incorporate interim road management to

provide for big game security, silvicultural practices that can hasten post-fire recovery for wildlife and recreation and reduce future fuel loading, and other management practices to minimize accelerated erosion.

DATES: Comments concerning the proposal and scope of the analysis should be received in writing by January 15th, 2001.

ADDRESSES: All questions and/or comments should be addressed to: USDA Forest Service, Townsend Ranger District, 415 S. Front Street, Box 29, Townsend, MT 59644.

FOR FURTHER INFORMATION CONTACT: David McMorran, Team Leader or Rachel Feigley, Assistant Team Leader, at the address above or (406) 266–3425. An Open House is scheduled for December 14, 2000, 4pm to 8pm, at the library community room in Townsend, Montana.

Additional Information: The analysis will include a no action alternative which will address the effects of not harvesting in the burned area. Other alternatives will consider a range of options, including varying the locations, timing and methods of timber removal. The analysis will consider the effects of the proposed action and alternatives within the entire affected watersheds (Blacktail and Sulphur Bar drainages), but actions will be limited to the burned areas- no green tree harvest is proposed.

Anticipated issues and concerns include, but are not limited to: Longterm watershed stability and recovery; fuel loading/fuel reduction in the future; inventoried roadless character and values; longterm management goals; opportunities to integrate salvage operations with restoration activities; big game security and retention of remaining hiding cover; snag management for wildlife; scenery and recreation management, the potential for spreading noxious weeds, and opportunities to benefit local economies.

The public will be notified, via mail and news release, of the implementation of this project and of the availability of the Draft and Final Analysis. The Forest Service is seeking information and comments from Federal, State and local agencies as well as individuals and organizations that may be interested in the proposal. The Forest Service invites written comments and suggestions related to the proposal. Information received will be used in preparation of the Draft Environmental Impact Statement. The Draft Environmental Impact Statement and Record of Decision in April 2001. The official close of the comment period for the Draft Environmental Impact Statement will be 45 days from the date the Environmental Protection Agency publishes the notice of availability in the **Federal Register**.

The Forest Service believes, at this early stage, it is important to give reviewers notice of several court rulings related to public participation in the environmental review process. First, reviewers of draft environmental impact statements must structure their participation in the environmental review of the proposal so that it is meaningful and alerts an agency to the reviewer's position and contentions. *Vermont Yankee Nuclear Power Corp* v. *NRDC,* 435 U.S. 519, 533 (1978). Also, environmental objections that could be raised at the draft environmental impact statement stage, but that are not raised until after completion of the final environmental impact statement, may be waived or dismissed by the courts. *City of Angoon* v. *Hodel,* 803 F.2d 1016, 1022 (9th Cir. 1986) and *Wisconsin Heritages, Inc.* v. *Harris,* 490 F. 1334, 1338 (E.D. Wis. 1980). Because of these court rulings, it is very important that those interested in this proposed action participate by the close of the 45 day comment period so that substantive comments and objections are made available to the Forest Service at a time when it can meaningfully consider them and respond to them in the final environmental impact statement.

To assist the Forest Service in identifying and considering issues and concerns on the proposed action, comments on the draft environmental impact statement should be as specific as possible. It is also helpful if comments refer to specific pages or chapters of the draft statement. Comments may also address the adequacy of the draft environmental impact statement or the merits of the alternatives formulated and discussed in the statement. Reviewers may wish to refer to the Council on Environmental Quality Regulations for implementing the procedural provisions on the National Environmental Policy Act at 40 CFR 1503.3 in addressing these points.

The responsible official is Thomas J. Clifford, Forest Supervisor, Helena National Forest, 2880 Skyway Drive, Helena, MT 59601.

Dated: December 1, 2000

Thomas J. Clifford,

Forest Supervisor.

[FR Doc. 00–31369 Filed 12–8–00; 8:45 am]

BILLING CODE 3410–11–M

DEPARTMENT OF AGRICULTURE

Opal Creek Scenic Recreation Area (SRA) Advisory Council

AGENCY: Forest Service, USDA.

ACTION: Notice of meeting.

SUMMARY: An Opal Creek Scenic Recreation Area Advisory Council meeting will convene in Salem, Oregon on Saturday, January 6, 2001. The meeting is scheduled to begin at 9:00 a.m., and will conclude at approximately 2:00 p.m. The meeting will be held at the Salem City Library, Louch Hall, located on 585 Liberty Street SE in Salem, Oregon.

The Opal Creek Wilderness and Opal Creek Scenic Recreation Area Act of 1996 (Opal Creek Act) (Pub. L. 104–208) directed the Secretary of Agriculture to establish the Opal Creek Scenic Recreation Area Advisory Council. The Advisory Council is comprised of thirteen members representing state, county and city governments, and representatives of various organizations, which include mining industry, environmental organizations, inholders in Opal Creek Scenic Recreation Area, economic development, Indian tribes, adjacent landowners and recreation interests. The council provides advice to the Secretary of Agriculture on preparation of a comprehensive Opal Creek Management Plan for the SRA, and consults on a periodic and regular basis on the management of the area. The tentative agenda will include refining issue statements and describing the desired future condition of the SRA.

The public comment period is tentatively scheduled to begin at 1:00 p.m. Time allotted for individual presentations will be limited to 3 minutes. Written comments are encouraged, particularly if the material cannot be presented within the time limits of the comment period. Written comments may be submitted prior to the January 6 meeting by sending them to Designated Federal Official Stephanie Phillips at the address given below.

FOR FURTHER INFORMATION CONTACT: For more information regarding this meeting, contact Designated Federal Official Stephanie Phillips; Willamette National Forest, Detroit Ranger District, HC 73 Box 320, Mill City, OR 97360; (503) 854–3366.

Dated: December 4, 2000.

Darrel Kenops,

Forest Supervisor.

[FR Doc. 00–31393 Filed 12–8–00; 8:45 am]

BILLING CODE 3410–11–M

DEPARTMENT OF AGRICULTURE

Opal Creek Scenic Recreation Area (SRA) Advisory Council

AGENCY: Forest Service, USDA.

ACTION: Notice of meeting.

SUMMARY: An Opal Creek Scenic Recreation Area Advisory Council meeting will convene in Stayton, Oregon on Monday, January 22, 2001. The meeting is scheduled to begin at 6 p.m., and will conclude at approximately 8:30 p.m. The meeting will be held in the South Room of the Stayton Community Center located on 400 West Virginia Street in Stayton, Oregon.

The Opal Creek Wilderness and Opal Creek Scenic Recreation Area Act of 1996 (Opal Creek Act) (Pub. L. 104–208) directed the Secretary of Agriculture to establish the Opal Creek Scenic Recreation Area Advisory Council. The Advisory Council is comprised of thirteen members representing state, county and city governments, and representatives of various organizations, which include mining industry, environmental organizations, inholders in Opal Creek Scenic Recreation Area, economic development, Indian tribes, adjacent landowners and recreation interests. The council provides advice to the Secretary of Agriculture on preparation of a comprehensive Opal Creek Management Plan for the SRA, and consults on a periodic and regular basis on the management of the area. The tentative agenda will include refining issue statements and describing the desired future condition of the SRA.

The public comment period is tentatively scheduled to begin at 8:00 p.m. Time allotted for individual presentations will be limited to 3 minutes. Written comments are encouraged, particularly if the material cannot be presented within the time limits of the comment period. Written comments may be submitted prior to the January 22 meeting by sending them to Designated Federal Official Stephanie Phillips at the address given below.

FOR FURTHER INFORMATION CONTACT: For more information regarding this meeting, contact Designated Federal Official Stephanie Phillips; Williamette National Forest, Detroit Ranger District, HC 73 Box 320, Mill City, OR 97360; (503) 854–3366.

Dated: December 4, 2000.

Darrel Kenops,

Forest Supervisor.

[FR Doc. 00–31394 Filed 12–8–00; 8:45 am]

BILLING CODE 3410–11–M

DEPARTMENT OF AGRICULTURE

Rural Utilities Service

Notice of Availability of a Programmatic Environmental Assessment

AGENCY: Rural Utilities Service, USDA.

ACTION: Notice of availability of a programmatic environmental assessment.

SUMMARY: Notice is hereby given that the Rural Utilities Service (RUS), has prepared a programmatic level analysis of certain environmental effects of combustion turbines utilized for electric utility applications and offers guidance on § 1794.15 of its Environmental Policies and Procedures (7 CFR Part 1794).

FOR FURTHER INFORMATION CONTACT: Lawrence R. Wolfe, Engineering and Environmental Staff, Rural Utilities Service, Stop 1571, 1400 Independence Avenue, SW., Washington, DC 20250–1571, telephone (202) 720–1784. The E-mail address is: lwolfe@rus.usda.gov.

SUPPLEMENTARY INFORMATION: This programmatic analysis, in accordance with the National Environmental Policy Act (NEPA), is designed to reconcile RUS procedural requirements for environmental analysis with the emerging needs of a deregulating electric utility industry. Increasing demand for electricity combined with a lack of new generation and retirement of obsolete plants has produced acute shortages and price spikes in some areas of the country.

To better manage power supply needs and to prudently hedge their exposure to power market risks, RUS generation and transmission (G&T) borrowers and others have turned to combustion turbine (CT) technology. Technological advances during the 1990s produced significant improvements to economic and operational efficiencies of CTs. Nearly 90 percent of new electricity generating capacity between 1997 and 2020 is projected to be combustion turbine technology fueled by natural gas or both oil and gas.

In contrast to base load generating plants, construction and installation of CT plants typically have much shorter lead times (18–36 months) and generally cost much less. Rather than being custom constructed on site, CTs are assembled in a factory, delivered to the site substantially complete, and then are installed. CTs are not designed to be operated continuously, but rather, to meet peak load requirements. Thus, CT emissions are more infrequent and generally lower than base load facilities that are designed to run continuously.

Unlike custom built generating resources, CTs are ''off-the-shelf'' products that are essentially identical in the details of acquisition, installation and operation at any given power rating. These common characteristics lend themselves to a common, *i.e.,* programmatic assessment of many of the environmental effects associated with such power plants. These common characteristics and range of sizes also make it easier for power suppliers to match their needs more closely as CT modules can be added incrementally. The environmental effects of the installation of a CT on a particular site are, of course, site specific and often unique. The evaluation and resolution of those issues often determine the ultimate siting of the CT.

It is common for a power supplier to order a CT and make progress payments during its fabrication long before the site for the CT has been selected or even identified. This is partially explained by the fact that power suppliers often have alternative sites on which to install the CT in the event that an environmental review process for the preferred site leads to a different outcome. In the unlikely event that a power supplier is unable to find any suitable site for a CT that it has ordered, it may assign or otherwise liquidate its position rather than incur significant losses. By proceeding with the siting process in parallel with the fabrication of the unit, the power supplier is able to address the growing needs for an adequate and reliable supply of electricity on a more timely basis than if the power supplier proceeded sequentially.

In order to assure a reliable and affordable power supply for rural America, RUS plans to advance funds to make progress payments on an otherwise eligible CT project while the site selection process for that CT project is pending. Any funds being requested for site development work or installation of the CT would, if approved, be conditioned upon the borrower meeting all other environmental requirements, including completion of a RUS site specific environmental review. RUS will not advance any funds for the site development or installation of any CT unless and until RUS has completed its environmental analysis of the specific site and determined that such site is acceptable.

Except for site specific issues, CTs present a set of common environmental issues. CTs use similar technology, have similar environmental impacts, have the same alternatives and otherwise raise

the same environmental review questions. Except for site-specific issues, RUS has found performing individual environmental reviews for each CT is needlessly redundant and does not contribute to better environmental decisionmaking. Therefore, RUS plans to address environmental issues common to all CTs in this programmatic level analysis. RUS will perform site-specific environmental review and analyses on each proposed CT when presented with proposed siting alternatives. This tiered approach is practicable, reduces paperwork and delays and fosters better decision making (see 7 CFR 1794.16).

Along with programmatic level environmental analysis, this document offers guidance to RUS borrowers on the scope of actions permissible under 7 CFR 1794.15 that they may take pending completion by RUS of the second analytical tier, *i.e.,* the site specific environmental analysis.

This analysis finds that considering the similar characteristics of most CTs and the limited reliable and affordable alternatives presently available for addressing rural America's needs for peaking supplies of electricity, RUS should tier its environmental analysis of CTs because it is practicable, reduces paperwork and delay, and produces better decision making. This programmatic analysis considers common characteristics and alternatives. RUS intends to consider on a case-by-case basis as they arise, whether the installation or operation of any particular CT on its proposed site will result in any significant environmental impacts. In making such individual determinations, RUS will consider the findings and requirements of other governmental entities having jurisdiction over the siting, development and operation of the CT and reserves the right to update this programmatic analysis to take additional information into account or develop particular elements of the analysis more fully as may be warranted in individual circumstances. Ordinarily, however, the analysis contained in this document will be incorporated either in its entirety or in part by reference in any further RUS analysis of particular CT projects.

In determining which loan applicant activities may proceed in connection with CTs before RUS completes the second tier of its environmental review, RUS has determined that 7 CFR 1794.15 permits an applicant to take all appropriate actions necessary to assure timely acquisition of CTs. Generally, during this period, applicants will take actions that do not have an adverse impact and do not preclude the search for alternatives, *e.g.*, site acquisition, executing a purchase contract for a CT, making manufacturer's progress payments, and site planning and design. As contrasted with site development or project construction, which may have adverse environmental consequences, these purchase, planning and design activities clearly do not. Nor do the expenditures for these permissible activities preclude the search for alternatives. CTs are fungible, in limited supply, and have a broad worldwide market. In the unlikely event that an applicant can find no environmentally suitable site on which to locate a CT or otherwise changes its plans, commercially reasonable alternatives exist to effectively ''unwind'' the transaction in the case of a CT that has not yet been installed.

RUS believes that in the event that the proposed CT project is not approved by the Administrator, the amount of unrecoverable losses which an applicant would consequently absorb would not jeopardize the Government's security interest in existing assets or otherwise compromise the objectivity of RUS review. In such an eventuality, RUS expects that even in a worse case scenario the applicant would incur only a modest cancellation charge as the manufacturer could reasonably be expected to sell the CT to another purchaser for a similar price. Given the current demand for CTs, at least for some time to come, it appears that a proactive applicant may be able to assign its purchase rights or otherwise transfer its rights in the CT to a third party and completely avoid losses. Accordingly, these pre-installation expenditures will not compromise RUS objectivity.

In a deregulated electricity market, failure to take prudent steps to acquire reasonably priced, reliable power supply resources in a timely manner exposes RUS borrowers, Rural Electrification Act (RE Act) beneficiaries, and RUS to unacceptably high levels of market risk and thereby frustrates the objectives of the RE Act. This tiered analysis and regulation interpretation is fully consistent with NEPA and eliminates unnecessary procedural delays, costs and risks.

This programmatic environmental assessment can be reviewed at the headquarters of RUS at the address provided above. The document is also available for public inspection on the RUS website at: www.usda.gov/rus/water/ees/ea.htm.

Questions and comments should be sent to RUS at the address provided. RUS will accept questions and comments on its proposed action for at least 30 days from the date of publication of this notice. RUS will take no final action related to this proposal until after notification of that action is published in the **Federal Register**.

Dated: December 1, 2000.

Lawrence R. Wolfe,

Acting Director, Engineering and Environmental Staff.

[FR Doc. 00–31179 Filed 12–8–00; 8:45 am]

BILLING CODE 3410–15–P

DEPARTMENT OF COMMERCE

Bureau of Export Administration

International Import Certificate

ACTION: Proposed collection; comment request.

SUMMARY: The Department of Commerce, as part of its continuing effort to reduce paperwork and respondent burden, invites the general public and other Federal agencies to take this opportunity to comment on proposed and/or continuing information collections, as required by the Paperwork Reduction Act of 1995, Public Law 104–13 (44 U.S.C. 3506(c)(2)(A)).

DATES: Written comments must be submitted on or before February 9, 2001.

ADDRESSES: Direct all written comments to Madeleine Clayton, Departmental Clearance Officer, Department of Commerce, Room 6086, 14th and Constitution Avenue, NW., Washington DC 20230.

FOR FURTHER INFORMATION CONTACT: Requests for additional information or copies of the information collection instrument(s) and instructions should be directed to Dawnielle Battle, Department of Commerce, Room 6883, 14th & Constitution Avenue, NW., Washington, DC, 20230.

SUPPLEMENTARY INFORMATION:

Abstract

The United States and several other countries have undertaken to increase the effectiveness of their respective controls over international trade in strategic commodities by means of an Import Certificate procedure. For the U.S. importer, this procedure provides that, where required by the exporting country with respect to a specific transaction, the importer certifies to the U.S. Government that he/she will import specific commodities into the United States and will not reexport such commodities except in accordance with the export control regulations of the

United States. The U.S. Government, in turn, certifies that such representations have been made.

Data

OMB Number: 0694–0017.

Form Number: Form BXA–645P, International Import Certificate.

Type of Review: Regular submission for extension of a currently approved collection.

Affected Public: Individuals, businesses or other for-profit and not-for-profit institutions.

Estimated Number of Respondents: 1,008.

Estimated Time Per Response: 16 minutes per response.

Estimated Total Annual Burden Hours: 270.

Estimated Total Annual Cost: No start-up capital expenditures.

Request for Comments

Comments are invited on: (a) Whether the proposed collection of information is necessary for the proper performance of the functions of the agency, including whether the information shall have practical utility; (b) the accuracy of the agency's estimate of the burden (including hours and cost) of the proposed collection of information; (c) ways to enhance the quality, utility, and clarity of the information to be collected; and (d) ways to minimize the burden of the collection of information on respondents, including through the use of automated collection techniques or other forms of information technology.

Comments submitted in response to this notice will be summarized and/or included in the request for OMB approval of this information collection; they will also become a matter of public record.

Dated: December 6, 2000.

Madeleine Clayton,

Departmental Clearance Officer, Office of the Chief Information Officer.

[FR Doc. 00–31405 Filed 12–8–00; 8:45 am]

BILLING CODE 3510–33–U

DEPARTMENT OF COMMERCE

Bureau of Export Administration

One-time Report for Foreign Software or Technology Eligible for De Minimis Exclusion

ACTION: Notice and request for comments.

SUMMARY: The Department of Commerce, as part of its continuing effort to reduce paperwork and respondent burden, invites the general public and other Federal agencies to take this opportunity to comment on proposed and/or continuing information collections, as required by the Paperwork Reduction Act of 1995, Public Law 104–13 (44 U.S.C. 3506(c)(2)(A)).

DATES: Written comments must be submitted on or before February 9, 2001.

ADDRESSES: Direct all written comments to Madeleine Clayton, Departmental Forms Clearance Officer, Department of Commerce, Room 6086, 14th and Constitution Avenue, NW., Washington, DC 20230.

FOR FURTHER INFORMATION CONTACT: Requests for additional information or copies of the information collection instrument(s) and instructions should be directed to Dawnielle Battle, Management Analyst, Department of Commerce, Room 6883, 14th & Constitution Avenue, NW., Washington, DC 20230.

SUPPLEMENTARY INFORMATION:

Abstract

Section 734.4 exempts from the EAR reexports of foreign technology commingled with or drawn from controlled U.S. origin technology valued at 10% or less of the total value of the foreign technology. However, persons must submit a one-time report for the foreign software or technology to BXA prior to reliance upon this *de minimis* exclusion.

Method of Collection

Exporters intending to rely on the *de minimis* exclusion for foreign software and technology commingled with U.S. software and technology must file a one-time report for the foreign software or technology.

Data

OMB Number: 0694–0101.

Form Number: None.

Type of Review: Regular submission for extension of a currently approved collection.

Affected Public: Individuals, businesses or other for-profit and not-for-profit institutions.

Estimated Number of Respondents: 7.

Estimated Time Per Response: 25 hours.

Estimated Total Annual Burden Hours: 175.

Estimated Total Annual Cost: No start-up capital expenditures.

Request for Comments

Comments are invited on: (a) Whether the proposed collection of information is necessary for the proper performance of the functions of the agency, including whether the information shall have practical utility; (b) the accuracy of the agency's estimate of the burden (including hours and cost) of the proposed collection of information; (c) ways to enhance the quality, utility, and clarity of the information to be collected; and (d) ways to minimize the burden of the collection of information on respondents, including through the use of automated collection techniques or other forms of information technology. Comments submitted in response to this notice will be summarized and/or included in the request for OMB approval of this information collection; they will also become a matter of public record.

Dated: December 6, 2000.

Madeleine Clayton,

Departmental Forms Clearance Officer, Office of the Chief Information Officer.

[FR Doc. 00–31406 Filed 12–8–00; 8:45 am]

BILLING CODE 3510–JT–U

DEPARTMENT OF COMMERCE

International Trade Administration, Commerce

Export Trade Certificate of Review

ACTION: Notice of Issuance of an Amended Export Trade Certificate of Review, Application No. 89–8A016.

SUMMARY: The Department of Commerce issued an amended Export Trade Certificate of Review to The Geothermal Energy Association (''GEA'') on November 13, 2000. Notice of issuance of the original Certificate was published in the **Federal Register** on February 9, 1990 (55 FR 4647).

FOR FURTHER INFORMATION CONTACT: Morton Schnabel, Director, Office of Export Trading Company Affairs, International Trade Administration, (202) 482–5131. This is not a toll-free number.

SUPPLEMENTARY INFORMATION: Title III of the Export Trading Company Act of 1982 (15 U.S.C. Sections 4001–21) authorizes the Secretary of Commerce to issue Export Trade Certificates of Review. The regulations implementing Title III are found at 15 CFR part 325 (1998).

The Office of Export Trading Company Affairs (''OETCA'') is issuing this notice pursuant to 15 CFR 325.6(b), which requires the Department of Commerce to publish a summary of a Certificate in the **Federal Register**. Under Section 305(a) of the Act and 15 CFR 325.11(a), any person aggrieved by the Secretary's determination may,

within 30 days of the date of this notice, bring an action in any appropriate district court of the United States to set aside the determination on the ground that the determination is erroneous.

Description of Amended Certificate

Export Trade Certificate of Review No. 89–8A016, was issued to Geothermal Energy Association on February 5, 1990 (55 FR 4647, February 9, 1990), and last amended on November 20, 1996 (61 FR 60092, November 26, 1996).

GEA's Export Trade Certificate of Review has been amended to:

1. Add each of the following companies as a new ''Member'' of the Certificate within the meaning of section 325.2(1) of the Regulations (15 CFR 325.2(1)): Power Engineers, Inc., PO Box 1066, 3940 Glenbrook Drive, Hailey, ID 83333; BIBB & Associates, Inc., 201 South Lake Ave., Suite 300, Pasadena, CA 91101;

2. Change the listing of the company name for the current Member ''Maxwell Laboratories'' to the new listing ''Maxwell Technologies, Inc.''.

3. Delete the following as members of the Certificate: Air Drilling Services, Inc.; American Line Builders, Inc.; Ballew Tool Company; Bridwell Controls; Dames & Moore, Inc.; Baker Hughes Oilfield Operations, Inc., d.b.a. Baker Hughes Inteq; Exergy, Inc.; Geothermal Power Company, Inc.; H & H Oil Tool Company, Inc.; C.E. Holt Company; Ingram Cactus Company; Kern Steel Fabrication, Inc.; Nabors Drilling USA, Inc.; Resource Group; Union Oil of California, d.b.a. UNOCAL and/or UNOCAL Corporation; M–I Drilling Fluids L.L.C., and its controlling entity, Smith International Acquisition Corp. and Smith International, Inc.

4. Remove the following restriction from the Certificate: Any exchange or discussion of the types of information set forth in Paragraph C. 13 (b),(c),(d) and (e) that would involve (1) drill bits, roller reamers, stabilizers, hole enlargers, pilot mills, watermelon mills, scrapers or wellhead changing equipment and (2) Smith International Inc. (including entities controlled by it: M–I Drilling Fluids L.L.C. and Smith International Acquisition Corp.) and Baker Hughes Oilfield Operations, Inc. (formerly Baker Hughes INTEQ, Inc.), shall be subject to the following limitations:

1. The exchange or discussion shall take place only to meet the requirements of an actual or potential *bona fide* export transaction; and

2. Each exchange or discussion shall take place in the presence of legal counsel who will advise participants on antitrust matters and who shall take notes (or arrange to have notes taken) of the exchange or discussion. Upon request of the Secretary of Commerce on his own behalf or on behalf of the Attorney General, such notes shall be made available to the Secretary of Commerce and/or the Attorney General.

5. Add the following term and condition to the Certificate: Membership in this Certificate is terminated when a company ceases to be a member of the Geothermal Energy Association (GEA), written notice of which GEA shall promptly transmit to the Secretary of Commerce and the Attorney General. A Member may also withdraw from coverage under this Certificate at any time by giving written notice to GEA, a copy of which GEA shall promptly transmit to the Secretary of Commerce and the Attorney General.

A copy of the amended certificate will be kept in the International Trade Administration's Freedom of Information Records Inspection Facility, Room 4102, U.S. Department of Commerce, 14th Street and Constitution Avenue, N.W., Washington, D.C. 20230.

Dated: December 1, 2000.

Morton Schnabel,

Director, Office of Export Trading Company Affairs.

[FR Doc. 00–31403 Filed 12–8–00; 8:45 am]

BILLING CODE 3510–DR–P

DEPARTMENT OF COMMERCE

International Trade Administration

Export Trade Certificate of Review

AGENCY: International Trade Administration, Commerce.

ACTION: Notice of Initiation of Process to Revoke Export Trade Certificate of Review No. 83–00024.

SUMMARY: The Secretary of Commerce issued an export trade certificate of review to U.S. Export & Trading Company. Because this certificate holder has failed to file an annual report as required by law, the Department is initiating proceedings to revoke the certificate. This notice summarizes the notification letter sent to Export & Trading Company.

FOR FURTHER INFORMATION CONTACT: Morton Schnabel, Director, Office of Export Trading Company Affairs, International Trade Administration, (202) 482–5131. This is not a toll-free number.

SUPPLEMENTARY INFORMATION: Title III of the Export Trading Company Act of 1982 (''the Act'') [15 U.S.C. 4011–21] authorizes the Secretary of Commerce to issue export trade certificates of review. The regulations implementing Title III (''the Regulations'') are found at 15 CFR part 325. Pursuant to this authority, a certificate of review was issued on July 25, 1995 to Export & Trading Company.

A certificate holder is required by law (Section 308 of the Act, 15 U.S.C. 4018) to submit to the Department of Commerce annual reports that update financial and other information relating to business activities covered by its certificate. The annual report is due within 45 days after the anniversary date of the issuance of the certificate of review (Sections 325.14 (a) and (b) of the Regulations). Failure to submit a complete annual report may be the basis for revocation. (Sections 325.10 (a) and 325.14 (c) of the Regulations).

The Department of Commerce sent to Export & Trading Company, on December 13, 1999, a letter containing annual report questions with a reminder that its annual report was due on February 6, 2000. Additional reminders were sent on May 2, 2000 and on July 19, 2000. The Department has received no written response to any of these letters.

On November 17, 2000, and in accordance with Section 325.10(c)(1) of the Regulations, a letter was sent by certified mail to notify Export & Trading Company that the Department was formally initiating the process to revoke its certificate. The letter stated that this action is being taken because of the certificate holder's failure to file an annual report.

In accordance with Section 325.10(c)(2) of the Regulations, each certificate holder has thirty days from the day after its receipt of the notification letter in which to respond. The certificate holder is deemed to have received this letter as of the date on which this notice is published in the **Federal Register**. For good cause shown, the Department of Commerce can, at its discretion, grant a thirty-day extension for a response.

If the certificate holder decides to respond, it must specifically address the Department's statement in the notification letter that it has failed to file an annual report. It should state in detail why the facts, conduct, or circumstances described in the notification letter are not true, or if they are, why they do not warrant revoking the certificate. If the certificate holder does not respond within the specified period, it will be considered an admission of the statements contained in the notification letter (section 325.10(c)(2) of the Regulations).

If the answer demonstrates that the material facts are in dispute, the Department of Commerce and the Department of Justice shall, upon request, meet informally with the certificate holder. Either Department may require the certificate holder to provide the documents or information that are necessary to support its contentions (section 325.10(c)(3) of the Regulations).

The Department shall publish a notice in the **Federal Register** of the revocation or modification or a decision not to revoke or modify (section 325.10(c)(4) of the Regulations). If there is a determination to revoke a certificate, any person aggrieved by such final decision may appeal to an appropriate U.S. district court within 30 days from the date on which the Department's final determination is published in the **Federal Register** (sections 325.10(c)(4) and 325.11 of the Regulations).

Dated: December 1, 2000.

Morton Schnabel,

Director, Office of Export Trading Company Affairs.

[FR Doc. 00–31404 Filed 12–8–00; 8:45 am]

BILLING CODE 3510–DR–P

DEPARTMENT OF COMMERCE

United States Patent and Trademark Office

RIN 0651–AB25

Reopening of the Time Period for Acceptance of Comments on Preliminary Draft Convention on Jurisdiction and Foreign Judgments in Civil and Commercial Matters

AGENCY: U.S. Patent and Trademark Office, Commerce.

ACTION: Reopening of time period for acceptance of comments.

SUMMARY: On Tuesday, October 17, 2000, the United States Patent and Trademark Office published a notice seeking comments on a convention being negotiated by the Hague Conference on Private International Law that is designed to create common jurisdictional rules for international recognition and enforcement of judgments issued under these rules (65 F.R. 61306 (2000)). Interested members of the public were invited to present written comments on the topics outlined in the Issues for Public Comment section of the Notice by December 1, 2000. This notice reopens the time period for submission of comments. Comments will be accepted through January 12, 2001.

EFFECTIVE DATE: All comments are due by January 12, 2001.

ADDRESSES: Persons wishing to offer written comments should address those comments to Director of the United States Patent and Trademark Office, Box 4, United States Patent and Trademark Office, Washington, DC 20231, marked to the attention of Elizabeth Shaw. Comments may also be submitted by facsimile transmission to (703) 305–7575 or by electronic mail through the Internet to *elizabeth.shaw2@uspto.gov.* All comments will be maintained for public inspection in Room 902 of Crystal Park II, 2121 Crystal Drive, Arlington, Virginia.

FOR FURTHER INFORMATION CONTACT: Jennifer Lucas by telephone at (703) 305–9300; by facsimile at (703) 305–8885; by electronic mail at jennifer.lucas@uspto.gov; or by mail marked to the attention of Jennifer Lucas, Attorney-Advisor, addressed to Director of the United States Patent and Trademark Office, Box 4, Washington, DC 20231.

Dated: December 5, 2000.

Albin F. Drost,

Acting General Counsel.

[FR Doc. 00–31355 Filed 12–8–00; 8:45 am]

BILLING CODE 3510–16–U

COMMITTEE FOR THE IMPLEMENTATION OF TEXTILE AGREEMENTS

Announcement of Import Restraint Limits for Certain Cotton and Man-Made Fiber Textile Products Produced or Manufactured in Kenya

December 5, 2000.

AGENCY: Committee for the Implementation of Textile Agreements (CITA).

ACTION: Issuing a directive to the Commissioner of Customs establishing limits.

EFFECTIVE DATE: January 1, 2001.

FOR FURTHER INFORMATION CONTACT: Naomi Freeman, International Trade Specialist, Office of Textiles and Apparel, U.S. Department of Commerce, (202) 482–4212. For information on the quota status of these limits, refer to the Quota Status Reports posted on the bulletin boards of each Customs port, call (202) 927–5850, or refer to the U.S. Customs website at http://www.customs.ustreas.gov. For information on embargoes and quota re-openings, call (202) 482–3715.

SUPPLEMENTARY INFORMATION:

Authority: Section 204 of the Agricultural Act of 1956, as amended (7 U.S.C. 1854); Executive Order 11651 of March 3, 1972, as amended.

The import restraint limits for textile products, produced or manufactured in Kenya and exported during the period January 1, 2001 through December 31, 2001 are based on limits notified to the Textiles Monitoring Body pursuant to the Uruguay Round Agreement on Textiles and Clothing (ATC).

In the letter published below, the Chairman of CITA directs the Commissioner of Customs to establish the limits for the 2001 period.

As required by the African Growth and Opportunity Act, these limits shall be eliminated within 30 days after the U.S. Trade Representative determines that Kenya has adopted an effective visa system to prevent unlawful transshipment of textile and apparel articles and the use of counterfeit documents relating to the importation of the articles into the United States.

A description of the textile and apparel categories in terms of HTS numbers is available in the CORRELATION: Textile and Apparel Categories with the Harmonized Tariff Schedule of the United States (see **Federal Register** notice 64 FR 71982, published on December 22, 1999). Information regarding the 2001 CORRELATION will be published in the **Federal Register** at a later date.

Richard B. Steinkamp,

Chairman, Committee for the Implementation of Textile Agreements.

Committee for the Implementation of Textile Agreements

December 5, 2000.

Commissioner of Customs,
Department of the Treasury, Washington, DC 20229.

Dear Commissioner: Pursuant to section 204 of the Agricultural Act of 1956, as amended (7 U.S.C. 1854); Executive Order 11651 of March 3, 1972, as amended; and the Uruguay Round Agreement on Textiles and Clothing (ATC), you are directed to prohibit, effective on January 1, 2001, entry into the United States for consumption and withdrawal from warehouse for consumption of cotton and man-made fiber textile products in the following categories, produced or manufactured in Kenya and exported during the twelve-month period beginning on January 1, 2001 and extending through December 31, 2001, in excess of the following levels of restraint:

Category	Twelve-month restraint limit
340/640	643,548 dozen.
360	4,647,847 numbers.

The limits set forth above are subject to adjustment pursuant to the provisions of the ATC and administrative arrangements notified to the Textiles Monitoring Body.

Products in the above categories exported during 2000 shall be charged to the applicable category limits for that year (see directive dated September 13, 1999) to the extent of any unfilled balances. In the event the limits established for that period have been exhausted by previous entries, such products shall be charged to the limits set forth in this directive.

In carrying out the above directions, the Commissioner of Customs should construe entry into the United States for consumption to include entry for consumption into the Commonwealth of Puerto Rico.

The Committee for the Implementation of Textile Agreements has determined that these actions fall within the foreign affairs exception of the rulemaking provisions of 5 U.S.C. 553(a)(1).

Sincerely,

Richard B. Steinkamp,

Chairman, Committee for the Implementation of Textile Agreements.

[FR Doc. 00–31389 Filed 12–8–00; 8:45 am]

BILLING CODE 3510–DR–F

COMMITTEE FOR THE IMPLEMENTATION OF TEXTILE AGREEMENTS

Announcement of Import Restraint Limits for Certain Cotton, Wool, Man-Made Fiber, Silk Blend and Other Vegetable Fiber Textiles and Textile Products Produced or Manufactured in Mauritius

December 5, 2000.

AGENCY: Committee for the Implementation of Textile Agreements (CITA).

ACTION: Issuing a directive to the Commissioner of Customs establishing limits.

EFFECTIVE DATE: January 1, 2001.

FOR FURTHER INFORMATION CONTACT: Naomi Freeman, International Trade Specialist, Office of Textiles and Apparel, U.S. Department of Commerce, (202) 482–4212. For information on the quota status of these limits, refer to the Quota Status Reports posted on the bulletin boards of each Customs port, call (202) 927–5850, or refer to the U.S. Customs website at http://www.customs.gov. For information on embargoes and quota re-openings, call (202) 482–3715.

SUPPLEMENTARY INFORMATION:

Authority: Section 204 of the Agricultural Act of 1956, as amended (7 U.S.C. 1854); Executive Order 11651 of March 3, 1972, as amended.

The import restraint limits for textile products, produced or manufactured in the Mauritius and exported during the period January 1, 2001 through December 31, 2001 are based on limits notified to the Textiles Monitoring Body pursuant to the Uruguay Round Agreement on Textiles and Clothing (ATC).

In the letter published below, the Chairman of CITA directs the Commissioner of Customs to establish the 2001 limits.

As required by the African Growth and Opportunity Act, these limits shall be eliminated within 30 days after the U.S. Trade Representative determines that Mauritius has adopted an effective visa system to prevent unlawful transshipment of textile and apparel articles and the use of counterfeit documents relating to the importation of the articles into the United States.

A description of the textile and apparel categories in terms of HTS numbers is available in the CORRELATION: Textile and Apparel Categories with the Harmonized Tariff Schedule of the United States (see **Federal Register** notice 64 FR 71982, published on December 22, 1999). Information regarding the 2001 CORRELATION will be published in the **Federal Register** at a later date.

Richard B. Steinkamp,

Chairman, Committee for the Implementation of Textile Agreements.

Committee for the Implementation of Textile Agreements

December 5, 2000.

Commissioner of Customs,

Department of the Treasury, Washington, DC 20229.

Dear Commissioner: Pursuant to section 204 of the Agricultural Act of 1956, as amended (7 U.S.C. 1854); Executive Order 11651 of March 3, 1972, as amended; and the Uruguay Round Agreement on Textiles and Clothing (ATC), you are directed to prohibit, effective on January 1, 2001, entry into the United States for consumption and withdrawal from warehouse for consumption of cotton, wool, man-made fiber, silk blend and other vegetable fiber textiles and textile products in the following categories, produced or manufactured in Mauritius and exported during the twelve-month period beginning on January 1, 2001 and extending through December 31, 2001, in excess of the following levels of restraint:

Category	Twelve-month restraint limit
Knit Group	
345, 438, 445, 446, 645 and 646, as a group.	238,802 dozen.
Levels not in a group	
237	307,948 dozen.
335/835	122,412 dozen.
336	144,048 dozen.
338/339	576,681 dozen.
340/640	938,509 dozen of which not more than 571,294 dozen shall be in Categories 340–Y/640–Y [1].
341/641	650,126 dozen.
347/348	1,213,889 dozen.
351/651	285,492 dozen.
352/652	2,420,963 dozen of which not more than 2,057,821 dozen shall be in Category 352.
442	12,566 dozen.
604–A [2]	484,035 kilograms.
638/639	663,186 dozen.
647/648/847	894,265 dozen.

[1] Category 340–Y: only HTS numbers 6205.20.2015, 6205.20.2020, 6205.20.2046, 6205.20.2050 and 6205.20.2060; Category 640–Y: only HTS numbers 6205.30.2010, 6205.30.2020, 6205.30.2050 and 6205.30.2060.

[2] Category 604–A: only HTS number 5509.32.0000.

The limits set forth above are subject to adjustment pursuant to the provisions of the ATC and administrative arrangements notified to the Textiles Monitoring Body.

Products in the above categories exported during 2000 shall be charged to the applicable category limits for that year (see directive dated September 13, 1999) to the extent of any unfilled balances. In the event the limits established for that period have been exhausted by previous entries, such products shall be charged to the limits set forth in this directive.

In carrying out the above directions, the Commissioner of Customs should construe entry into the United States for consumption to include entry for consumption into the Commonwealth of Puerto Rico.

The Committee for the Implementation of Textile Agreements has determined that these actions fall within the foreign affairs exception of the rulemaking provisions of 5 U.S.C. 553(a)(1).

Sincerely,

Richard B. Steinkamp,

Chairman, Committee for the Implementation of Textile Agreements.

[FR Doc. 00–31388 Filed 12–8–00; 8:45 am]

BILLING CODE 3510–DR–F

COMMITTEE FOR THE IMPLEMENTATION OF TEXTILE AGREEMENTS

Adjustment of Import Limits for Certain Cotton and Man-Made Fiber Textile Products Produced or Manufactured in Taiwan

December 5, 2000.

AGENCY: Committee for the Implementation of Textile Agreements (CITA).

ACTION: Issuing a directive to the Commissioner of Customs adjusting limits.

EFFECTIVE DATE: December 11, 2000.

FOR FURTHER INFORMATION CONTACT: Roy Unger, International Trade Specialist, Office of Textiles and Apparel, U.S. Department of Commerce, (202) 482–4212. For information on the quota status of these limits, refer to the Quota Status Reports posted on the bulletin boards of each Customs port, call (202) 927–5850, or refer to the U.S. Customs website at http://www.customs.gov. For information on embargoes and quota re-openings, call (202) 482–3715.

SUPPLEMENTARY INFORMATION:

Authority: Section 204 of the Agricultural Act of 1956, as amended (7 U.S.C. 1854); Executive Order 11651 of March 3, 1972, as amended.

The current limits for certain categories are being adjusted for special shift and partial undoing of special shift.

A description of the textile and apparel categories in terms of HTS numbers is available in the CORRELATION: Textile and Apparel Categories with the Harmonized Tariff Schedule of the United States (see **Federal Register** notice 64 FR 71982, published on December 22, 1999). Also see 64 FR 60796, published on November 8, 1999.

Richard B. Steinkamp,

Chairman, Committee for the Implementation of Textile Agreements.

Committee for the Implementation of Textile Agreements

December 5, 2000.

Commissioner of Customs,
Department of the Treasury, Washington, DC 20229.

Dear Commissioner: This directive amends, but does not cancel, the directive issued to you on November 2, 1999, by the Chairman, Committee for the Implementation of Textile Agreements. That directive concerns imports of certain cotton, wool, man-made fiber, silk blend and other vegetable fiber textiles and textile products, produced or manufactured in Taiwan and exported during the twelve-month period which began on January 1, 2000 and extends through December 31, 2000.

Effective on December 11, 2000, you are directed to adjust the current limits for the following categories, as provided for under the terms of the current bilateral textile agreement:

Category	Adjusted twelve-month limit [1]
Sublevels in Group II	
331	424,829 dozen pairs.
338/339	970,197 dozen.
347/348	1,405,973 dozen of which not more than 1,200,354 dozen shall be in Categories 347–W/348–W [2].
631	5,537,192 dozen pairs.
638/639	6,662,435 dozen.
647/648	5,447,962 dozen of which not more than 5,177,017 dozen shall be in Categories 647–W/648–W [3].
Within Group II Subgroup	
351	338,922 dozen.
651	517,397 dozen.

[1] The limits have not been adjusted to account for any imports exported after December 31, 1999.

[2] Category 347–W: only HTS numbers 6203.19.1020, 6203.19.9020, 6203.22.3020, 6203.22.3030, 6203.42.4005, 6203.42.4010, 6203.42.4015, 6203.42.4025, 6203.42.4035, 6203.42.4045, 6203.42.4050, 6203.42.4060, 6203.49.8020, 6210.40.9033, 6211.20.1520, 6211.20.3810 and 6211.32.0040; Category 348–W: only HTS numbers 6204.12.0030, 6204.19.8030, 6204.22.3040, 6204.22.3050, 6204.29.4034, 6204.62.3000, 6204.62.4005, 6204.62.4010, 6204.62.4020, 6204.62.4030, 6204.62.4040, 6204.62.4050, 6204.62.4055, 6204.62.4065, 6204.69.6010, 6204.69.9010, 6210.50.9060, 6211.20.1550, 6211.20.6810, 6211.42.0030 and 6217.90.9050.

[3] Category 647–W: only HTS numbers 6203.23.0060, 6203.23.0070, 6203.29.2030, 6203.29.2035, 6203.43.2500, 6203.43.3500, 6203.43.4010, 6203.43.4020, 6203.43.4030, 6203.43.4040, 6203.49.1500, 6203.49.2015, 6203.49.2030, 6203.49.2045, 6203.49.2060, 6203.49.8030, 6210.40.5030, 6211.20.1525, 6211.20.3820 and 6211.33.0030; Category 648–W: only HTS numbers 6204.23.0040, 6204.23.0045, 6204.29.2020, 6204.29.2025, 6204.29.4038, 6204.63.2000, 6204.63.3000, 6204.63.3510, 6204.63.3530, 6204.63.3532, 6204.63.3540, 6204.69.2510, 6204.69.2530, 6204.69.2540, 6204.69.2560, 6204.69.6030, 6204.69.9030, 6210.50.5035, 6211.20.1555, 6211.20.6820, 6211.43.0040 and 6217.90.9060.

The Committee for the Implementation of Textile Agreements has determined that these actions fall within the foreign affairs exception of the rulemaking provisions of 5 U.S.C. 553(a)(1).

Sincerely,

Richard B. Steinkamp,

Chairman, Committee for the Implementation of Textile Agreements.

[FR Doc. 00–31390 Filed 12–8–00; 8:45 am]

BILLING CODE 3510–DR–F

DEPARTMENT OF EDUCATION

Submission for OMB Review; Comment Request

AGENCY: Department of Education.

SUMMARY: The Leader, Regulatory Information Management Group, Office of the Chief Information Officer invites comments on the submission for OMB review as required by the Paperwork Reduction Act of 1995.

DATES: Interested persons are invited to submit comments on or before January 10, 2001.

ADDRESSES: Written comments should be addressed to the Office of Information and Regulatory Affairs, Attention: Lauren Wittenberg, Acting Desk Officer, Department of Education, Office of Management and Budget, 725 17th Street, NW., Room 10235, New Executive Office Building, Washington, DC 20503 or should be electronically mailed to the internet address *Lauren_Wittenberg@omb.eop.gov.*

SUPPLEMENTARY INFORMATION: Section 3506 of the Paperwork Reduction Act of 1995 (44 U.S.C. Chapter 35) requires that the Office of Management and Budget (OMB) provide interested Federal agencies and the public an early opportunity to comment on information collection requests. OMB may amend or waive the requirement for public consultation to the extent that public participation in the approval process would defeat the purpose of the information collection, violate State or Federal law, or substantially interfere with any agency's ability to perform its statutory obligations. The Leader, Regulatory Information Management Group, Office of the Chief Information Officer, publishes that notice containing proposed information collection requests prior to submission of these requests to OMB. Each proposed information collection, grouped by office, contains the following: (1) Type of review requested, *e.g.* new, revision, extension, existing or reinstatement; (2) Title; (3) Summary of the collection; (4) Description of the need for, and proposed use of, the information; (5) Respondents and frequency of collection; and (6) Reporting and/or Recordkeeping burden. OMB invites public comment.

Dated: December 5, 2000.

John Tressler,

Leader, Regulatory Information Management, Office of the Chief Information Officer.

Office of Special Education and Rehabilitative Services

Type of Review: Extension.

Title: Annual Client Assistance Program (CAP) Report.

Frequency: Annually.

Affected Public: State, Local, or Tribal Gov't, SEAs or LEAs.

Reporting and Recordkeeping Hour Burden: Responses: 56.

Burden Hours: 350.

Abstract: Form RSA–227 is used to analyze and evaluate the Client Assistance Program (CAP) administered by designated CAP agencies. These agencies provide services to clients and client applicants of programs, projects, and community rehabilitation programs authorized by the Rehabilitation Act of 1973, as amended. Data also are reported on information and referral services provided to any individual with a disability in the State or Territory.

Requests for copies of the proposed information collection request may be accessed from *http://edicsweb.ed.gov,* or should be addressed to Vivian Reese, Department of Education, 400 Maryland Avenue, SW., Room 4050, Regional Office Building 3, Washington, DC 20202–4651. Requests may also be electronically mailed to the internet address OCIO—IMG—Issues@ed.gov or faxed to 202–708–9346. Please specify the complete title of the information collection when making your request. Comments regarding burden and/or the collection activity requirements should be directed to Sheila Carey at (202) 708–6287 or via her internet address Sheila_Carey@ed.gov. Individuals who use a telecommunications device for the deaf (TDD) may call the Federal Information Relay Service (FIRS) at 1–800–877–8339.

[FR Doc. 00–31392 Filed 12–8–00; 8:45 am]

BILLING CODE 4001–01–U

DEPARTMENT OF EDUCATION

Web-Based Education Commission; Press Conference

AGENCY: Office of Postsecondary Education, Education.

SUMMARY: This notice announces the press conference of the Web-based Education Commission. Notice of this press conference is in accordance with Section 10(a)(2) of the Federal Advisory Committee Act. This document is intended to notify the general public of its opportunity to attend the press conference.

DATE: The press conference will be held on December 14, 2000 at 9:30 a.m. It will be held at the National Press Club, 529 14th St., NW. in Washington, DC in the Hollerman Lounge.

FOR FURTHER INFORMATION CONTACT: David Byer, Executive Director, Web-based Education Commission, U.S. Department of Education, 1990 K Street, NW., Washington, DC 20006–8533. Telephone: (202) 219–7045. Fax: (202) 502–7675. Email: *web_commission@ed.gov.*

SUPPLEMENTARY INFORMATION: The Web-based Education Commission is authorized by Title VIII, Part J of the Higher Education Amendments of 1998, as amended by the Fiscal 2000 Appropriations Act for the Departments of Labor, Health, and Human Services, and Education, and Related Agencies. The Commission is required to conduct a thorough study to assess the critical pedagogical and policy issues affecting the creation and use of web-based and other technology-mediated content and learning strategies to transform and improve teaching and achievement at the K–12 and postsecondary education levels. The Commission must issue a final report to the President and the Congress, not later than 12 months after the first meeting of the Commission, which occurred November 16–17, 1999. The final report will contain a detailed statement of the Commission's findings and conclusions, as well as recommendations.

The December 14 press conference is to announce the release of the Commission's final report, The Power of the Internet: Moving from Promise to Practice.

The press conference is open to the public. Records are kept of all Commission proceedings and are available for public inspection at the office of the Web-based Education Commission, Room 6131, 1990 K Street, NW., Washington, DC 20006–8533, from the hours of 9 a.m. to 5:30 p.m.

Assistance To Individuals With Disabilities

The press conference site is accessible to individuals with disabilities. Individuals who will need an auxiliary aid or service (*e.g.,* interpreting services, assistive listening devices, or materials in alternative format) should contact the person listed in this notice before the scheduled date of the press conference. We will attempt to meet all requests, but cannot guarantee availability of the requested accommodation.

Electronic Access to This Document

You may view this document, as well as all other Department of Education documents published in the **Federal Register**, in text or Adobe Portable Document Format (PDF) on the Internet at either of the following sites: *http://ocfo.ed.gov/fedreg.htm http://www.ed.gov/news/html.*

To use the PDF you must have the Adobe Acrobat Reader Program with Search, which is available free at either of the previously mentioned sites. If you have questions about using the PDF, call the U.S. Government Printing Office (GPO), toll free, at 1–888–293–6498; or in the Washington, DC area, at (202) 512–1530.

Note: The official version of this document is the document published in the **Federal Register**. Free Internet access to the official edition of the **Federal Register** and the Code of Federal Regulations is available on GPO Access at: *http://www.access.gpo.gov/nara/indes.html.*

Dated: December 5, 2000.

A. Lee Fritschler,

Assistant Secretary, Office of Postsecondary Education.

[FR Doc. 00–31395 Filed 12–8–00; 8:45 am]

BILLING CODE 4000–01–U

DEPARTMENT OF ENERGY

National Energy Technology Laboratory; Notice of Availability of a Financial Assistance Solicitation

AGENCY: Department of Energy (DOE), National Energy Technology Laboratory (NETL).

ACTION: Notice inviting financial assistance applications.

SUMMARY: The Department of Energy announces that it intends to conduct a competitive Program Solicitation, DE–PS26–01NT41094, and award financial assistance (Cooperative Agreements) for the program entitled ''Industries of the Future, Emerging Technology Deployment.'' Through this solicitation, the DOE/NETL seeks applications on behalf of the DOE's Office of Energy Efficiency and Renewable Energy (EERE), Office of Industrial Technologies (OIT). The DOE/NETL, by way of the Federal Financial Assistance application process, is seeking proposals for cost-shared implementation of technologies to reduce energy consumption, enhance economic competitiveness, and reduce environmental impacts. The DOE/NETL targets, specifically, the Industries of the Future (IOF) industrial sectors for technology implementations under this

solicitation. The IOF sectors consist of the following, nine major materials and processing industries: agriculture, aluminum, chemicals, forest products, glass, metalcasting, mining, petroleum, and steel.

This solicitation seeks to implement OIT-supported or non-OIT technologies that meet the following requirements: Address the needs in IOF vision documents and technology roadmaps; have completed research and development and have progressed through a demonstration at a pilot-scale or full-scale facility, with demonstrated performance benefits in energy conservation and emissions reductions; and have potential to result in significant improvements in energy efficiency, environmental performance, and economic competitiveness across the industry. Projects of most interest will be those that show significant energy savings and large market penetration either through multiple implementations within one industrial sector or broad applicability across all IOF sectors.

DATES: A draft Program Solicitation will be available on or about December 20, 2000. Comments and/or questions concerning the draft version must be submitted to, and received by the DOE Contract Specialist no later than 30 calendar days from its actual posting on DOE/NETL's Web site. The mailing and E-mail addresses are provided below.

ADDRESSES: The draft Program Solicitation will be available on the DOE/NETL's Internet address at *http://www.netl.doe.gov/business/solicit.* The final version of the solicitation along with all amendments will be posted at this same Internet address; applicants are therefore encouraged to periodically check this NETL address to ascertain the status of these documents. Applications must be prepared and submitted in accordance with the instructions and forms contained in the final version of this Program Solicitation.

FOR FURTHER INFORMATION CONTACT: Larry D. Gillham, MS: 921–118, U.S. Department of Energy, National Energy Technology Laboratory, 626 Cochrans Mill Road, PO Box 10940, Pittsburgh, PA 15236–0940, E-mail Address: gillham@netl.doe.gov, Telephone Number: (412) 386–5817.

SUPPLEMENTARY INFORMATION: The DOE anticipates award of multiple cost-sharing cooperative agreements; but the DOE reserves the right to award the agreement type and number deemed in its best interest. As required in Section 3002, Title XXX of the Energy Policy Act (EPAct), offerors are advised that *mandatory* 50% cost-share will be required for each project. Not all of the necessary funds are currently available for this solicitation; the Government's obligation under any cooperative agreement awarded is contingent upon the availability of appropriated FY2001 and FY2002 funds.

It is DOE's desire to encourage the widest participation including the involvement of small business concerns, and small disadvantaged business concerns. Proposals should be submitted by the entity that would house the technology implementation. In order to gain the necessary expertise to review proposals, non-Federal personnel may be used as evaluators or advisors in the evaluation of proposals, but will not serve as members of the technical merit review committee(s).

Issued in Pittsburgh, PA on November 30, 2000.

Dale A. Siciliano,

Deputy Director, Acquisition and Assistance Division.

[FR Doc. 00–31438 Filed 12–8–00; 8:45 am]

BILLING CODE 6450–01–P

DEPARTMENT OF ENERGY

National Energy Technology Laboratory; Notice of Availability of a Financial Assistance Solicitation

AGENCY: National Energy Technology Laboratory, Department of Energy (DOE).

ACTION: Notice of availability of a financial assistance solicitation.

SUMMARY: Notice is hereby given of the intent to issue Financial Assistance Solicitation No. DE–PS26–01NT41104 entitled ''Power Plant Improvement Initiative.'' A draft program solicitation, as a precursor to potentially awarding multiple financial assistance cooperative agreements, is now being developed. Following release of the draft solicitation, expected in December 2000, a comment and response session with industry and other potential partners will be conducted prior to final issuance of the program solicitation. Final issuance of the program solicitation is slated for late-January or early-February 2001 with awards expected early in fiscal year 2002. DOE will provide $95 million to fund the program, and proposers must match (or exceed) the government cost share for every project, bringing the total program value to at least $190 million. DOE anticipates making multiple awards under this program solicitation.

DATES: The draft solicitation will be available on the DOE/NETL's Internet address at http://www.netl.doe.gov/business on or about December 6, 2000.

ADDRESSES: For the contact to submit comments, where documents can be obtained, where meetings are being held, please see the **FOR FURTHER INFORMATION CONTACT.**

FOR FURTHER INFORMATION CONTACT: Jo Ann C. Zysk, MS 921–107, U.S. Department of Energy, National Energy Technology Laboratory, P.O. Box 10940, E-mail Address: zysk@netl.doe.gov, Telephone Number: (412) 386–6600.

SUPPLEMENTARY INFORMATION: Work is underway at the Department of Energy's National Energy Technology Laboratory to initiate a $190 million dollar, fifty percent industry cost shared research, development and demonstration program aimed at improving thereliability of the nation's fleet of coal-fired power plants. In many regions of the United States, our expanding economy is being powered by out-of-date and undersized electric power facilities. The result has been an increasing frequency of power supply disruptions and sharp increases in the electric bills of many Americans. With more than half of our electric power being generated by coal in the United States and an abundant domestic supply of coal, projections are that coal generated power will be a major contributor to our economic expansion well into the next century. Electric power produced from coal is fundamental to a strong U.S. economy and to domestic energy security considering recent instabilities in natural gas prices and our current dependance on foreign oil supplies.

As the U.S. electric industry transitions to a new and competitive business structure, the demands on the existing fleet of coal-based electric generating facilities are changing. Power plants must operate in a fashion that reduces environmental impacts, achieves greater efficiency in operation, reduces carbon dioxide, nitric oxide, and sulfur emissions, remains cost competitive, and responds quickly to changing customer demand. This Power Plant Improvement Initiative will demonstrate advanced coal-based technologies applicable to existing and new power plants including plants capable of producing electricity and some combination of heat, fuels, and/or chemicals from coal-derived synthesis gas.

The technologies to be developed under this program will be vital to the role that coal and other solid fuels will play on the world power production scene. Production of more electricity while creating a cleaner environment at

lower cost has the potential to raise the standard of living of not only the citizens of the United States, but of the world as a whole.

The National Energy Technology Laboratory (NETL), DOE's newest national lab that oversees the department's fossil fuel programs, will manage the program. NETL manages and implements a broad spectrum of energy and environmental programs. NETL employs approximately 1,100 federal personnel and support-service contractors at its sites in Pittsburgh, PA and Morgantown, WV.

Prospective applicants who would like to be notified as soon as the draft solicitation is available should register at http://www.netl.doe.gov/business. Provide your E-mail address and click on the ''Coal Liquids/Solid Fuels Feedstocks'' technology choice located under the heading ''Fossil Energy.'' Once you subscribe, you will receive an announcement by E-mail that the *draft* solicitation has been released to the public. Telephone requests, written requests, E-mail requests, or facsimile requests for a copy of the draft solicitation package will not be accepted and/or honored. The draft solicitation will be open for public comments on December 6. A public meeting will be held on December 15, 2000 and the draft solicitation will be closed to public comments on January 5, 2001.

The final solicitation will be made available on or about January 31, 2001. Applications must be prepared and submitted in accordance with the instructions and forms contained in the solicitation. The final solicitation document will allow for requests for explanation and/or interpretation.

Issued in Pittsburgh, PA on November 24, 2000.

Dale A. Siciliano,

Deputy Director, Acquisition and Assistance Division.

[FR Doc. 00–31437 Filed 12–8–00; 8:45 am]

BILLING CODE 6450–01–P

DEPARTMENT OF ENERGY

Bonneville Power Administration

Schultz-Hanford Area Transmission Line Project

AGENCY: Bonneville Power Administration (BPA), Department of Energy (DOE).

ACTION: Notice of intent to prepare an environmental impact statement (EIS) and notice of floodplain and wetlands involvement.

SUMMARY: This notice announces BPA's intention to prepare an EIS on the construction, operation, and maintenance of a 59-mile-long 500-kilovolt (kV) single-circuit transmission line in Kittitas, Yakima, Grant, and/or Benton Counties, State of Washington. In accordance with DOE regulations for compliance with floodplain and wetlands environmental review requirements, BPA will prepare a floodplain and wetlands assessment and will perform this proposed action in a manner so as to avoid or minimize potential harm to or within the affected floodplain and wetlands. The assessment and a floodplain statement of findings will be included in the EIS being prepared for the proposed project in accordance with the National Environmental Policy Act.

DATES: BPA has established a 30-day scoping period. Written comments are due to the address below no later than January 25, 2001. Comments may also be made at EIS scoping meetings to be held on January 9, 10, and 11, 2001.

ADDRESSES: BPA invites comments and suggestions on the proposed scope of the Draft EIS. To comment, phone toll-free 1–800–622–4519; send an e-mail to the BPA Internet address *comment@bpa.gov;* or mail comments to Communications, Bonneville Power Administration—KC–7, P.O. Box 12999, Portland, Oregon, 97212. To be placed on the project mail list, call 1–800–622–4520.

Three EIS scoping meetings will be held: (1) Tuesday, January 9, 2001, 4 p.m. to 8 p.m., at the Sage Brush Senior Center, 442 Desert Aire Drive, Desert Aire, Washington; (2) Wednesday, January 10, 2001, 4 p.m. to 8 p.m., at the Yakima County Courthouse, Room 420, Yakima, Washington; and (3) Thursday, January 11, 2001, 4 p.m. to 8 p.m., at the Hal Holmes Community Center, 201 North Ruby Street, Ellensburg, Washington. At the informal meetings, several members of the project team will be available to answer questions and accept oral and written comments. Scoping will help BPA ensure that a full range of issues related to this proposal is addressed in the EIS, and also will identify significant or potentially significant impacts that may result from the proposed project.

FOR FURTHER INFORMATION CONTACT: Lou Driessen, Project Manager, Bonneville Power Administration—TNP–3, P.O. Box 3621, Portland, Oregon, 97208–3621; telephone 503–230–5525; or e-mail *lcdriessen@bpa.gov.* You may also contact Nancy Wittpenn, Environmental Project Manager, Bonneville Power Administration—KEC–4, P.O. Box 3621, Portland, Oregon, 97208–3621; telephone 503–230–3297; fax 503–230–5699; or e-mail *nawittpenn@bpa.gov.*

SUPPLEMENTARY INFORMATION: The proposed 59-mile-long 500–kV single-circuit transmission line would be constructed from the existing Schultz Substation near Ellensburg, Washington, to the existing Hanford or Ashe Substation on the Hanford Nuclear Reservation or to a new substation west of the reservation, near Benton Rural Electric Association's Blackrock Substation. The new line is necessary to relieve constraints on several transmission paths (lines) that move electricity across Washington. The new line would also provide more operational flexibility and meet market needs by increasing transmission capacity for additional interstate transfer of electricity. BPA has identified several possible alternative routes for the new line. The new routes have the potential to cross private land, the Yakima Firing Center, the Hanford Nuclear Reservation, the Columbia River, and the Saddle Mountain Wildlife Refuge. BPA is in the process of contacting the U.S. Department of the Army, the U.S. Bureau of Land Management, the U.S. Bureau of Reclamation, and the U.S. Fish and Wildlife Service to determine whether they would like to be cooperating agencies in the EIS process.

This action may involve floodplain and wetlands located in Kittitas, Yakima, Grant, and Benton Counties, State of Washington. When completed, the Draft EIS will be circulated for review and comment, and BPA will hold several public comment meetings for the Draft EIS. BPA will consider and respond in the Final EIS to comments received on the Draft EIS.

Maps and further information are available from BPA at the address above.

Issued in Portland, Oregon, on December 1, 2000.

Steven G. Hickok,

Acting Administrator and Chief Executive Officer.

[FR Doc. 00–31443 Filed 12–8–00; 8:45 am]

BILLING CODE 6450–01–P

DEPARTMENT OF ENERGY

Federal Energy Regulatory Commission

[Docket No. RP01–124–000]

Algonquin Gas Transmission Company; Notice of Proposed Changes in FERC Gas Tariff

December 5, 2000.

Take notice that on November 30, 2000, Algonquin Gas Transmission Company (Algonquin) tendered for filing as part of its FERC Gas Tariff, Fourth Revised Volume No. 1 and Original Volume No. 2, the following revised tariff sheets to become effective January 1, 2001;

Fourth Revised Volume 1

Second Revised Sheet No. 4
Original Sheet No. 36A
Eighth Revised Sheet No. 37
Fourth Revised Sheet No. 241
Original Sheet No. 241A
Second Revised Sheet No. 243
Fourth Revised Sheet No. 245
Fourth Revised Sheet No. 247
Fourth Revised Sheet No. 248
Fifth Revised Sheet No. 940
Fourth Revised Sheet No. 942

Original Volume No. 2

Sixth Revised Sheet No. 1B
First Revised Sheet No. 342

Algonquin asserts that the purpose of this filing is to convert its firm lateral line transportation obligation to New England Power Company from Part 157 Rate Schedule X–37 to Part 284 Rate Schedule AFT–CL pursuant to the automatic authorization conferred by Section 157.217 of the Commission's regulations.

Algonquin states that copies of the filing were mailed to all affected customers and interested state commissions.

Any person desiring to be heard or to protect said filing should file a motion to intervene or a protest with the Federal Energy Regulatory Commission, 888 First Street, NE., Washington, DC 20426, in accordance with Sections 385.214 or 385.211 of the Commission's Rules and Regulations. All such motions or protest must be filed in accordance with Section 154.210 of the Commission's Regulations. Protests will be considered by the Commission in determining the appropriate action to be taken, but will not serve to make protestants parties to the proceedings. Any person wishing to become a party must file a motion to intervene. Copies of this filing are on file with the Commission and are available for public inspection in the Public Reference Room. This filing may be viewed on the web at *http://www.ferc.fed.us/online/rims.htm* (call 202–208–2222 for assistance). Comments and protests may be filed electronically via the intenet in lieu of paper. See, 18 CFR 385.2001(a)(1)(iii) and the instructions on the Commission's web site at *http://www.ferc.fed.us/efi/doorbell.htm.*

David P. Boergers,

Secretary.

[FR Doc. 00–31430 Filed 12–18–00; 8:45 am]

BILLING CODE 6717–01–M

DEPARTMENT OF ENERGY

Federal Energy Regulatory Commission

[Docket No. CP01–40–000]

Bitter Creek Pipelines, LLC; Notice of Petition for Declaratory Order

December 5, 2000.

Take notice that on November 30, 2000, Bitter Creek Pipelines, LLC, (Bitter Creek), 1250 West Century Avenue, Bismarck, North Dakota 58503, filed a petition for declaratory order in Docket No. CP01–40–000, requesting that the Commission declare that certain field compressor stations located in Yuma and Logan Counties, Colorado, and Cheyenne County, Kansas to be acquired from Kinder Morgan Interstate Gas Transmission LLC (KM) would have the primary function of gathering of natural gas and would thereby be exempt from the Commission's jurisdiction pursuant to Section 1(b) of the Natural Gas Act (NGA), all as more fully set forth in the petition which is on file with the Commission and open to public inspection. This filing may be viewed on the web at http://www.ferc.fed.us/online/rims.htm (call 202–208–2222).

Bitter Creek states that it and KM have entered into a Compressor Purchase Agreement (Agreement), dated June 5, 2000, in which KM has agreed to sell and Bitter Creek has agreed to purchase 12 field compressor stations from KM. Bitter Creek states that these field compressors are situated at the intersection of KM's interstate pipeline and with various gathering facilities located in Yuma and Logan Counties, Colorado, and Cheyenne County, Kansas. Bitter Creek states that as part of the Agreement, KM has agreed to obtain abandonment authority from the Commission for these 12 field compressors and will report the abandonment of these facilities under § 157.216 of the Commission's Regulations and KMs blanket authority.

Bitter Creek states that after the acquisition of the facilities by Bitter Creek, the operation of the facilities will not change. Bitter Creek states that the primary function of the facilities will be gathering as the only gas being compressed through the facilities is local production from wells and gathering lines connected to the facilities. Bitter Creek states that no interruption, reduction, or termination of service to parties receiving service through these compressors has occurred since Bitter Creek began operating the field compressors effective June 1, 2000. No interruption is expected to occur upon Bitter Creek's acquisition of the facilities.

Bitter Creek submits that, just as the Commission has determined in numerous prior proceedings involving the spin-off of pipeline facilities to third-party purchasers, the primary function of the facilities to be acquired in this proceeding is that of gathering, consistent with the criteria set forth in *Farmland Industries, Inc.* (23 FERC ¶ 61,063 (1983), as modified in subsequent orders, thus qualifying them as exempt gathering facilities under the NGA.

Any questions concerning this application may be directed to Bitter Creek's counsel, Robert T. Hall, III, of Thelen Reid & Priest LLP, at (202) 508–4000.

Any person desiring to be heard or to protest with reference to said petition should on or before December 26, 2000, file with the Federal Energy Regulatory Commission, 888 First Street, NE., Washington, DC 20426, a motion to intervene or a protest in accordance with the requirements of the Commission's Rules of Practice and Procedure (18 CFR 385.211 or 385.214) and the regulations under the Natural Gas Act (18 CFR 157.10). All protests filed with the Commission will be considered by it in determining the appropriate action to be taken but will not serve to make the protestants parties to the proceeding. The Commission's rules require that protectors provide copies of of their protests to the party or parties directly involved. Any person to become a party to a proceeding or to participate as a party in any hearing therein must file a motion to intervene in accordance with the Commission's rules. Comments and protests may be filed electronically via the internet in lieu of paper. See, 18 CFR 385.200(a)(1)(iii) and the instructions on the Commission's web site at http://www.ferc.fed.us/efi/doorbell.htm.

Take further notice that, pursuant to the authority contained in and subject to jurisdiction conferred upon the

Commission by Sections 7 and 15 of the NGA and the Commission's Rules of Practice and Procedure, a hearing will be held without further notice before the Commission or its designee on this application if no motion to intervene is filed within the time required herein, if the Commission on its own review of the matter finds that a grant of the certificate is required by the public convenience and necessity. If a motion for leave to intervene is timely filed, or if the Commission on its own motion believes that a formal hearing is required, further notice of such hearing will be duly given.

Under the procedure herein provided for, unless otherwise advised, it will be unnecessary for Bitter Creek to appear or be represented at the hearing.

David P. Boergers,

Secretary.

[FR Doc. 00–31422 Filed 12–8–00; 8:45 am]

BILLING CODE 6717–01–M

DEPARTMENT OF ENERGY

Federal Energy Regulatory Commission

[Docket No. RP01–122–000]

Chandeleur Pipe Line Company; Notice of Proposed Changes in FERC Gas Tariff

December 5, 2000.

Take notice that on November 30, 2000, Chandeleur Pipe Line Company Pipe Line (Chandeleur) tendered for filing proposed changes in its FERC Gas Tariff, Second Revised Volume No. 1, Eleventh Revised Sheet No. 5, with an effective date of January 1, 2001.

Chandeleur states that it is proposing to change it's Fuel and Line Loss Allowance from 0.2% to 0.0%, to become effective January 1, 2001.

Chandeleur states that copies of the filing were served upon the company's jurisdictional customers and state regulatory commissions.

Any person desiring to be heard or to protest said filing should file a motion to intervene or a protest with the Federal Energy Regulatory Commission, 888 First Street, NE., Washington, DC 20426, in accordance with Sections 385.214 or 385.211 of the Commission's Rules and Regulations. All such motions or protests must be filed in accordance with Section 154.210 of the Commission's Regulations. Protests will be considered by the Commission in determining the appropriate action to be taken, but will not serve to make protestants parties to the proceedings. Any person wishing to become a party must file a motion to intervene. Copies of this filing are on file with the Commission and are available for public inspection in the Public Reference Room. This filing may be viewed on the web at http://www.ferc.fed.us/online/rims.htm (call 202–208–2222 for assistance). Comments and protests may be filed electronically via the internet in lieu of paper. See, 18 CFR 385.2001(a)(1)(iii) and the instructions on the Commission's web site at http://www.ferc.fed.us/efi/doorbell.htm.

David P. Boergers,

Secretary.

[FR Doc. 00–31428 Filed 12–8–00; 8:45 am]

BILLING CODE 6717–01–M

DEPARTMENT OF ENERGY

Federal Energy Regulatory Commission

[Docket No. RP01–137–000]

Colorado Interstate Gas Company; Notice of Tariff Filing

December 5, 2000.

Take notice that on December 1, 2000, Colorado Interstate Gas Company (CIG), tendered for filing as part of its FERC Gas Tariff, First Revised Volume No. 1, Thirty-First Revised Sheet No. 11, with an effective date of January 1, 2001.

CIG states that the filing was made pursuant to CIG's FERC Gas Tariff, First Revised Volume No. 1, General Terms and Conditions, Article 21.5 (Account No. 858 Stranded Costs).

CIG states that copies of the filing were served upon the company's jurisdictional firm customers and interested state commissions.

Any person desiring to be heard or to protest said filing should file a motion to intervene or a protest with the Federal Energy Regulatory Commission, 888 First Street, NE., Washington, DC 20426, in accordance with Sections 385.214 or 385.211 of the Commission's Rules and Regulations. All such motions or protests must be filed in accordance with Section 154.210 of the Commission's Regulations. Protests will be considered by the Commission in determining the appropriate action to be taken, but will not serve to make protestants parties to the proceedings. Any person wishing to become a party must file a motion to intervene. Copies of this filing are on file with the Commission and are available for public inspection in the Public Reference Room. This filing may be viewed on the web at http://www.ferc.fed.us/online/rims.htm (call 202–208–2222 for assistance). Comments and protests may be filed electronically via the internet in lieu of paper. See, 18 CFR 385.2001(a)(1)(iii) and the instructions on the Commission's web site at http://www. ferc.fed.us/efi/doorbell.htm.

David P. Boergers,

Secretary.

[FR Doc. 00–31420 Filed 12–8–00; 8:45 am]

BILLING CODE 6717–01–M

DEPARTMENT OF ENERGY

Federal Energy Regulatory Commission

[Docket No. RP01–138–000]

Columbia Gulf Transmission Company; Notice of Proposed Changes in FERC Gas Tariff

December 5, 2000.

Take notice that on December 1, 2000, Columbia Gulf Transmission Company (Columbia Gulf) tendered for filings as part of its FERC Gas Tariff, Second Revised Volume No. 1, the following revised tariff sheets to become effective January 1, 2001:

Twenty-fourth Revised Sheet No. 18
Fourteenth Revised Sheet No. 18A
Twenty-fifth Revised Sheet No. 19

Columbia Gulf states that this filing is being submitted in accordance with the Federal Energy Regulatory Commission's (Commission) order issued on September 29, 1999 in Gas Research Institute's (GRI) Docket No. RP99–323–000 (Order Approving Settlement) (88 FERC ¶ 61,293), and in accordance with Section 33 of the General Terms and Conditions of its FERC Gas Tariff, Columbia is submitting revised tariff sheets to reflect the 2000 GRI funding mechanism.

Columbia Gulf states that copies of its filing have been served upon its firm and interruptible customers and affected state commissions.

Any person desiring to be heard or to protest said filing should file a motion to intervene or a protest with the Federal Energy Regulatory Commission, 888 First Street, NE., Washington, DC 20426, in accordance with Sections 385.214 or 385.211 of the Commission's Rules and Regulations. All such motions or protests must be filed in accordance with Section 154.210 of the Commission's Regulations. Protests will be considered by the Commission in determining the appropriate action to be taken, but will not serve to make protestants parties to the proceedings. Any person wishing to become a party must file a motion to intervene. Copies of this filing are on file with the Commission and are available for public

inspection in the Public Reference Room. This filing may be viewed on the web at http://www.ferc.fed.us/online/rims.htm (call 202–208–2222 for assistance). Comments and protests may be filed electronically via the internet in lieu of paper. See, 18 CFR 385.2001(a)(1)(iii) and the instructions on the Commission's web site at http://www.ferc.fed.us/efi/doorbell.htm.

David P. Boergers,

Secretary.

[FR Doc. 00–31416 Filed 12–8–00; 8:45 am]

BILLING CODE 6717–01–M

DEPARTMENT OF ENERGY

Federal Energy Regulatory Commission

[Docket No. RP01–118–000]

El Paso Natural Gas Company; Notice of Tariff Filing

December 5, 2000.

Take notice that on November 28, 2000, El Paso Natural Gas Company (El Paso), tendered for filing as part of its FERC Gas Tariff, Second Revised Volume No. 1–A, Eighth Revised Sheet No. 29, to become effective January 1, 2001.

El Paso states that the tendered tariff sheet revises the fuel charges applicable to transportation service on El Paso's system.

Any person desiring to be heard or to protest said filing should file a motion to intervene or a protest with the Federal Energy Regulatory Commission, 888 First Street, NE., Washington, DC 20426, in accordance with Sections 385.214 or 385.211 of the Commission's Rules and Regulations. All such motions or protests must be filed in accordance with Section 154.210 of the Commission's Regulations. Protests will be considered by the Commisssion in determining the appropriate action to be taken, but will not serve to make protestants parties to the proceedings. Any person wishing to become a party must file a motion to intervene. Copies of this filing are on file with the Commission and are available for public inspection in the Public Reference Room. This filing may be viewed on the web at http://www.ferc.fed.us/online/rims.htm (call 202–208–2222 for assistance). Comments and protests may be filed electronically via the internet in lieu of paper. See, 18 CFR 385.2001(a)(1)(iii) and the instructions on the Commission's web site at http://www.ferc.fed.us/efi/doorbell.htm.

David P. Boergers,

Secretary.

[FR Doc. 00–31418 Filed 12–8–00; 8:45 am]

BILLING CODE 6717–01–M

DEPARTMENT OF ENERGY

Federal Energy Regulatory Commission

[Docket No. RP01–117–000]

El Paso Natural Gas Company; Notice of Proposed Changes in FERC Gas Tariff

December 5, 2000.

Take notice that on November 28, 2000, El Paso Natural Gas Company (El Paso) tendered for filing as part of its FERC Gas Tariff, the following tariff sheets, to become effective January 1, 2001:

Second Revised Volume No. 1–A

Nineteenth Revised Sheet No. 20
Thirteenth Revised Sheet No. 22
Nineteenth Revised Sheet No. 23
Twenty-Third Revised Sheet No. 24
Nineteenth Revised Sheet No. 26
Nineteenth Revised Sheet No. 27
Sixth Revised Sheet No. 37
Sixth Revised Sheet No. 38

Third Revised Volume No. 2

Forty-Eighth Revised Sheet No. 1–D.2
Forty-Second Revised Sheet No. 1–D.3

El Paso states that the above tariff sheets are being filed to adjust its rates for inflation.

Any person desiring to be heard or to protest said filing should file a motion to intervene or a protest with the Federal Energy Regulatory Commission, 888 First Street, N.E., Washington, D.C. 20426, in accordance with Sections 385.214 or 385.211 of the Commission's Rules and Regulations. All such motions or protests must be filed in accordance with Section 154.210 of the Commission's Regulations. Protests will be considered by the Commission in determining the appropriate action to be taken, but will not serve to make protestants parties to the proceedings. Any person wishing to become a party must file a motion to intervene. Copies of this filing are on file with the Commission and are available for public inspection in the Public Reference Room. This filing may be viewed on the web at http://www.ferc.fed.us/online/rims.htm (call 202–208–2222 for assistance). Comments and protests may be filed electronically via the internet in lieu of paper. See, 18 CFR 385.2001(a)(1)(iii) and the instructions on the Commission's web site at http://www.ferc.fed.us/efi/doorbell.htm.

David P. Boergers,

Secretary.

[FR Doc. 00–31424 Filed 12–8–00; 8:45 am]

BILLING CODE 6717–01–M

DEPARTMENT OF ENERGY

Federal Energy Regulatory Commission

[Docket No. RP01–136–000]

Florida Gas Transmission Company; Notice of Proposed Changes in FERC Gas Tariff

December 5, 2000.

Take notice that on November 30, 2000, Florida Gas Transmission Company (FGT) tendered for filing as part of its FERC Gas Tariff, Third Revised Volume No. 1, the following tariff sheets, with an effective date of January 1, 2001:

Forty-Fifth Revised Sheet No. 8A
Thirty-Seventh Revised Sheet No. 8A.01
Thirty-Seventh Revised Sheet No. 8A.02
Forty-First Revised Sheet No. 8B
Thirty-Fourth Revised Sheet No. 8B.01

FGT states that it is filing the above referenced tariff sheets pursuant to the January 21, 1998, Stipulation and Agreement Concerning GRI Funding (GRI Settlement) as approved by the Federal Energy Regulatory Commission Order issued April 29, 1998 in Docket No. RP97–199–003. For the year of 2001, the funding mechanism includes the approved GRI demand charges of 9 cents per MMBtu per month (.30¢ per MMBtu stated on a daily basis underlying FGT's reservation charges) to be applicable to firm shippers with load factors exceeding 50%, 5.5 cents per MMBtu per month (.18¢ per MMBtu stated on a daily basis underlying FGT's reservation charges) to be applicable to firm shippers with load factors of 50% or less and a volumetric charge of 0.70 cents per MMBtu to be applicable to all non-discounted interruptible rates and to the usage portion of two-part rates. In addition, the 2001 funding mechanism includes a volumetric charge of 1.10 cents per MMBtu to be applicable to all one-part small customer rates. This funding mechanism provides for a decrease in GRI charges as compared to the currently effective 2000 GRI charges.

Any person desiring to be heard or to protest said filing should file a motion to intervene or a protest with the Federal Energy Regulatory Commission, 888 First Street, NE., Washington, DC 20426, in accordance with Sections 385.214 or 385.211 of the Commission's

Rules and Regulations. All such motions or protests must be filed in accordance with Section 154.210 of the Commission's Regulations. Protests will be considered by the Commission in determining the appropriate action to be taken, but will not serve to make protestants parties to the proceedings. Any person wishing to become a party must file a motion to intervene. Copies of this filing are on file with the Commission and are available for public inspection in the Public Reference Room. This filing may be viewed on the web at http://www.ferc.fed.us/online/rims.htm (call 202–208–2222 for assistance). Comments and protests may be filed electronically via the internet in lieu of paper. See, 18 CFR 385.2001(a)(1)(iii) and the instructions on the Commission's web site at http://www.ferc.fed.us/efi/doorbell.htm.

David P. Boergers,

Secretary.

[FR Doc. 00–31415 Filed 12–8–00; 8:45 am]

BILLING CODE 6717–01–M

DEPARTMENT OF ENERGY

Federal Energy Regulatory Commission

[Docket No. RP01–119–000]

Great Lakes Gas Transmission Limited Partnership; Notice of Tariff Filing

December 5, 2000.

Take notice that on November 28, 2000, Great Lakes Gas Transmission Limited Partnership (Great Lakes) tendered for filing as part of its FERC Gas Tariff, Second Revised Volume No. 1, Eleventh Revised Sheet No. 7 and Sixth Revised Sheet No. 48, proposed to be effective January 1, 2001.

Great Lakes states that the tariff sheets described above reflect the revised funding surcharges for the Gas Research Institute (GRI) for the year 2001. These surcharges were approved by the Commission in its letter order issued September 19, 2000, in Docket No. RP00–313–000, in which it also approved GRI's funding for its year 2001 research, development, and demonstration (RD&D) program and its 2001–2005 five-year RD&D plan.

Any person desiring to be heard or to protest said filing should file a motion to intervene or a protest with the Federal Energy Regulatory Commission, 888 First Street, NE., Washington, DC 20426, in accordance with Sections 385.214 or 385.211 of the Commission's Rules and Regulations. All such motions or protests must be filed in accordance with Section 154.210 of the Commission's Regulations. Protests will be considered by the Commission in determining the appropriate action to be taken, but will not serve to make protestants parties to the proceedings. Any person wishing to become a party must file a motion to intervene. Copies of this filing are on file with the Commission and are available for public inspection in the Public Reference Room. This filing may be viewed on the web at http://www.ferc.fed.us/online/rims.htm (call 202–208–2222 for assistance). Comments and protests may be filed electronically via the internet in lieu of paper. See, 18 CFR 385.2001(a)(1)(iii) and the instructions on the Commission's web site at http://www.ferc.fed.us/efi/doorbell.htm.

David P. Boergers,

Secretary.

[FR Doc. 00–31425 Filed 12–8–00; 8:45 am]

BILLING CODE 6717–01–M

DEPARTMENT OF ENERGY

Federal Energy Regulatory Commission

[Docket No. RP01–125–000]

Iroquois Gas Transmission System, L.P.; Notice of Proposed Changes in FERC Gas Tariff

December 5, 2000.

Take notice that on November 30, 2000, Iroquois Gas Transmission System, L.P. (Iroquois) tendered for filing to become part of its FERC Gas Tariff, First Revised Volume No. 1, Second Revised Sheet No. 4A, with an effective date of January 1, 2001.

Iroquois states that, pursuant to Part 154 of the Commission's regulations and Section 12.1 of the General Terms and Conditions of its tariff, it is filing Twenty-Sixth Revised Sheet No. 4 to reflect the GRI surcharge for calendar year 2001, which the Commission approved in an order issued on September 19, 2000 in Docket No. RP00–313.

Iroquois states that copies of its filing were served on all jurisdictional customers and interested state commissions.

Any person desiring to be heard or to protest said filing should file a motion to intervene or a protest with the Federal Energy Regulatory Commission, 888 First Street, NE., Washington, DC 20426, in accordance with Sections 385.214 or 385.211 of the Commission's Rules and Regulations. All such motions or protests must be filed in accordance with Section 154.210 of the Commission's Regulations. Protests will be considered by the Commission in determining the appropriate action to be taken, but will not serve to make protestants parties to the proceedings. Any person wishing to become a party must file a motion to intervene. Copies of this filing are on file with the Commission and are available for public inspection in the Public Reference Room. This filing may be viewed on the web at http://www.ferc.fed.us/online/rims.htm (call 202–208–2222 for assistance). Comments and protests may be filed electronically via the internet in lieu of paper. See, 18 CFR 385.2001(a)(1)(iii) and the instructions on the Commission's web site at http://www.ferc.fed.us/efi/doorbell.htm.

David P. Boergers,

Secretary.

[FR Doc. 00–31431 Filed 12–18–00; 8:45 am]

BILLING CODE 6717–01–M

DEPARTMENT OF ENERGY

Federal Energy Regulatory Commission

[Docket No. RP01–127–000]

Kinder Morgan Interstate Gas Transmission LLC; Notice of Tariff Filing

December 5, 2000.

Take notice that on November 30, 2000, Kinder Morgan Interstate Gas Transmission LLC, (KMIGT) tendered for filing as part of its FERC Gas Tariff, First Revised Volume No. 1, the following tariff sheet, to become effective January 1, 2001:

Third Revised Sheet No. 4D

Pursuant to the Commission's Order issued September 19, 2000 in Docket No. RP00–313–000, KMIGT submits a proposed tariff sheet reflecting the required changes to the Gas Research Institute (GRI) surcharges in its tariff.

Any person desiring to be heard or to protest said filing should file a motion to intervene or a protest with the Federal Energy Regulatory Commission, 888 First Street, NE., Washington, DC 20426, in accordance with Sections 385.214 or 385.211 of the Commission's Rules and Regulations. All such motions or protests must be filed in accordance with Section 154.210 of the Commission's Regulations. Protests will be considered by the Commission in determining the appropriate action to be taken, but will not serve to make protestants parties to the proceedings. Any person wishing to become a party must file a motion to intervene. Copies of this filing are on file with the

Commission and are available for public inspection in the Public Reference Room. This filing may be viewed on the web at http://www.ferc.fed.us/online/rims.htm (call 202–208–2222 for assistance). Comments and protests may be filed electronically via the internet in lieu of paper. See, 18 CFR 385.2001(a)(1)(iii) and the instructions on the Commission's web site at http://www.ferc.fed.us/efi/doorbell.htm.

David P. Boergers,

Secretary.

[FR Doc. 00–31433 Filed 12–8–00; 8:45 am]

BILLING CODE 6717–01–M

DEPARTMENT OF ENERGY

Federal Energy Regulatory Commission

[Docket No. RP01–126–000]

K N Wattenberg Transmission Limited Liability Co.; Notice of Tariff Filing

December 5, 2000.

Take notice that on November 30, 2000, K N Wattenberg Transmission Limited Liability Co., (KNW) tendered for filing as part of its FERC Gas Tariff, First Revised Volume No. 1, the following tariff sheet, to become effective January 1, 2001:

Third Revised Sheet No. 6

Pursuant to the Commission's Order issued September 19, 2000 in Docket No. RP00–313–000, KNW submits a proposed tariff sheet reflecting the required changes to the Gas Research Institute (GRI) surcharges in its tariff.

Any person desiring to be heard or to protest said filing should file a motion to intervene or a protest with the Federal Energy Regulatory Commission, 888 First Street, NE., Washington, DC 20426, in accordance with Sections 385.214 or 385.211 of the Commission's Rules and Regulations. All such motions or protests must be filed in accordance with Section 154.210 of the Commission's Regulations. Protests will be considered by the Commission in determining the appropriate action to be taken, but will not serve to make protestants parties to the proceedings. Any person wishing to become a party must file a motion to intervene. Copies of this filing are on file with the Commission and are available for public inspection in the Public Reference Room. This filing may be viewed on the web at http://www.ferc.fed.us/online/rims.htm (call 202–208–2222 for assistance). Comments and protests may be filed electronically via the internet in lieu of paper. See, 18 CFR 385.2001(a)(1)(iii) and the instructions on the Commission's web site at http://www.ferc.fed.us/efi/doorbell.htm.

David P. Boergers,

Secretary.

[FR Doc. 00–31432 Filed 12–8–00; 8:45 am]

BILLING CODE 6717–01–M

DEPARTMENT OF ENERGY

Federal Energy Regulatory Commission

[Docket No. CP01–39–000]

Koch Gateway Pipeline Company; Notice of Request Under Blanket Authorization

December 5, 2000.

Take notice that on November 29, 2000, Koch Gateway Pipeline Company (Koch Gateway), P.O. Box 1478, Houston, Texas 77251–1478, filed in Docket No. CP01–39–000 a request pursuant to Sections 157.205 and 157.211 of the Commission's Regulation under the Natural Gas Act (18 CFR Sections 157.205 and 157.211) for authorization to install new delivery point facilities in Baldwin County, Alabama in order to accommodate deliveries of natural gas to the City of Daphine, Albama (Daphine), under Koch Gateway's blanket certificate issued in Docket No. CP82–430–000 pursuant to Section 7 of the Natural Gas Act, all as more fully set forth in the request which is on file with the Commission and open to public inspection. This filing may be viewed on the web at *http://www.ferc.fed.us/online/rims.htm.* Call (202) 208–2222 for assistance.

Koch Gateway states that the City of Daphine is currently served by the City of Fairhope, Alabama. It is explained that the proposed facilities consist of a 4-inch tap, valve and a flow computer, and it is stated that Koch Gateway will construct, own and operate the facilities. It is asserted that the facilities will have a maximum daily capacity of 7,500 Mcf. It is further asserted that Koch Gateway has sufficient capacity to make the deliveries without detriment or disadvantage to its other customers. Koch Gateway estimates the cost of the proposed facilities at $39,468. Koch Gateway states that its FERC Gas Tariff does not prohibit the addition of new delivery points. It is explained that Koch Gateway will transport gas under Section 284 of the Commission's Regulations and will make deliveries to Daphine on a firm or no notice basis.

Any questions regarding the application should be directed to Kyle Stephens, Director of Certificates, at Koch Gateway Pipeline Company, P.O. Box 1478, Houston, Texas 77251–1478, (713) 544–4123.

Any person or the Commission's staff may, within 45 days after issuance of the instant notice by the Commission, file pursuant to Rule 214 of the Commission's Procedural Rules (18 CFR 385.214) a motion to intervene or notice of intervention and pursuant to Section 157.205 of the Regulations under the Natural Gas Act (18 CFR 157.205), a protest to the request. If no protest is filed within the time allowed therefor, the proposed activity shall be deemed to be authorized effective the day after the time allowed for protest. If a protest is filed and not withdrawn within 30 days after the time allowed for filing a protest, the instant request shall be treated as an application for authorization pursuant to section 7 of the Natural Gas Act. Beginning November 1, 2000, comments and protests may be filed electronically via the internet in lieu of paper. See 18 CFR 385.2001(a)(1)(iii) and the instructions on the Commission's web site at *http://www.ferc.fed.us/efi/doorbell.htm.*

David P. Boergers,

Secretary.

[FR Doc. 00–31423 Filed 12–8–00; 8:45 am]

BILLING CODE 6717–01–M

DEPARTMENT OF ENERGY

Federal Energy Regulatory Commission

[Docket No. RP01–120–000]

Mississippi River Transmission Corporation; Notice of Tariff Filing

December 5, 2000.

Take notice that on November 29, 2000, Mississippi River Transmission Corporation (MRT) tendered for filing as part of its Gas Tariff, Third Revised Volume No. 1, the following sheets, to become effective January 1, 2001:

Thirty Eighth Revised Sheet No. 5
Thirty Eighth Revised Sheet No. 6
Thirty Fifth Revised Sheet No. 7

MRT states that pursuant to the GRI provisions of the settlement in Docket No. RP98–235, and Commission Order in Docket No. RP99–323, MRT is filing to adjust its annual GRI transportation surcharge rates established in the GRI 2001 RD&D program.

Any person desiring to be heard or to protest said filing should file a motion to intervene or a protest with the Federal Energy Regulatory Commission, 888 First Street, NE., Washington, DC 20426, in accordance with Sections

385.214 or 385.211 of the Commission's Rules and Regulations. All such motions or protests must be filed in accordance with Section 154.210 of the Commission's Regulations. Protests will be considered by the Commission in determining the appropriate action to be taken, but will not serve to make protestants parties to the proceedings. Any person wishing to become a party must file a motion to intervene. Copies of this filing are on file with the Commission and are available for public inspection in the Public Reference Room. This filing may be viewed on the web at http://www.ferc.fed.us/online/rims.htm (call 202–208–2222 for assistance). Comments and protests may be filed electronically via the internet in lieu of paper. See, 18 CFR 385.2001(a)(1)(iii) and the instructions on the Commission's web site at http://www.ferc.fed.us/efi/doorbell.htm.

David P. Boergers,

Secretary.

[FR Doc. 00–31426 Filed 12–8–00; 8:45 am]

BILLING CODE 6717–01–M

DEPARTMENT OF ENERGY

Federal Energy Regulatory Commission

[Docket No. RP01–123–000]

National Fuel Gas Supply Corporation; Notice of Tariff Filing

December 5, 2000.

Take notice that on November 30, 2000, National Fuel Gas Supply Corporation (National) tendered for filing as part of its FERC Gas Tariff, Fourth Revised Volume No. 1, the following tariff sheet, to become effective December 1, 2000.

Twenty Eighth Revised Sheet No. 9

National states that under Article II, Section 2, of the settlement, it is required to recalculate the maximum Interruptible Gathering (IG) rate monthly and to charge that rate on the first day of the following month if the result is an IG rate more than 2 cents above or below the IG rate as calculated under Section 1 of Article II. The recalculation produced an IG rate of 34 cents per dth. In addition, Article III, Section 1 states that nay overruns of the Firm Gathering service provided by National shall be priced at the maximum IG rate.

Any person desiring to be heard or to protest said filing should file a motion to intervene or a protest with the Federal Energy Regulatory Commission, 888 First Street, NE., Washington, DC 20426, in accordance with Sections 385.214 or 385.211 of the Commission's Rules and Regulations. All such motions or protests must be filed in accordance with Section 154.210 of the Commission's Regulations. Protests will be considered by the Commission in determining the appropriate action to be taken, but will not serve to make protestants parties to the proceedings. Any person wishing to become a party must file a motion to intervene. Copies of this filing are on file with the Commission and are available for public inspection in the Public Reference Room. This filing may be viewed on the web at *http://www.ferc.fed.us/online/rims.htm* (call 202–208–2222 for assistance). Comments and protests may be filed electronically via the internet in lieu of paper. See, 18 CFR 385.2001(a)(1)(iii) and the instructions on the Commission's web site at *http://www.ferc.fed.us/efi/doorbell.htm.*

David P. Boergers,

Secretary.

[FR Doc. 00–31429 Filed 12–8–00; 8:45 am]

BILLING CODE 6717–01–M

DEPARTMENT OF ENERGY

Federal Energy Regulatory Commission

[Docket No. RP01–121–000]

PG&E Gas Transmission, Northwest Corporation; Notice of Tariff Filing

December 5, 2000.

Take notice that on November 30, 2000, PG&E Gas Transmission, Northwest Corporation (PG&E GTN) tendered for filing as part of its FERC Gas Tariff, First Revised Volume No. 1–A, Twenty-Ninth Revised Sheet No. 4, Fifteenth Revised Sheet No. 4A and Twelfth Revised Sheet No. 6C.

PG&E GTN states that these tariff sheets establish PG&E GTN's Gas Research Institute (''GRI'') surcharge for calendar year 2001. PG&E GTN proposes that these sheets be made effective January 1, 2001.

PG&E GTN further states that a copy of this filing has been served on PG&E GTN's jurisdictional customers and interested state regulatory agencies.

Any person desiring to be heard or to protest said filing should file a motion to intervene or a protest with the Federal Energy Regulatory Commission, 888 First Street, N.E., Washington, DC 20426, in accordance with Sections 385.214 or 385.211 of the Commission's Rules and Regulations. All such motions or protests must be filed in accordance with Section 154.210 of the Commission's Regulations. Protests will be considered by the Commission in determining the appropriate action to be taken, but will not serve to make protestants parties to the proceedings. Any person wishing to become a party must file a motion to intervene. Copies of this filing are on file with the Commission and are available for public inspection in the Public Reference Room. This filing may be viewed on the web at http://www.ferc.fed.us/online/rims.htm (call 202–208–2222 for assistance). Comments and protests may be filed electronically via the internet in lieu of paper. See, 18 CFR 385.2001(a)(1)(iii) and the instructions on the Commission's web site at http://www.ferc.fed.us/efi/doorbell.htm.

David P. Boergers,

Secretary.

[FR Doc. 00–31427 Filed 12–8–00; 8:45 am]

BILLING CODE 6717–01–M

DEPARTMENT OF ENERGY

Federal Energy Regulatory Commission

[Docket No. RP01–132–000]

Southern Natural Gas Company; Notice of Revised Tariff Sheets

December 5, 2000.

Take notice that on November 30, 2000, Southern Natural Gas Company (Southern) tendered for filing as part of its FERC Gas Tariff, Seventh Revised Volume No. 1, the following tariff sheets, to become effective January 1, 2001:

Fifty-fourth Revised Sheet No. 14
Seventy-fifth Revised Sheet No. 15
Fifty-fourth Revised Sheet No. 16
Seventy-fifth Revised Sheet No. 17
Thirty-eighth Revised Sheet No. 18

Section 14.2 of Southern's Tariff provides for an annual reconciliation of Southern's storage costs to reflect differences between the cost to Southern of its storage gas inventory and the amount Southern receives for such gas arising out of (i) the purchase and sale of such gas in order to resolve shipper imbalances; and (ii) the purchase and sale of gas as necessary to maintain an appropriate level of storage gas inventory for system management purposes. In the instant filing, Southern submits the rate surcharge to the transportation component of its rates under Rate Schedules FT, FT–NN, and IT resulting from the fixed and realized losses it has incurred from the purchase and sale of its storage gas inventory.

Southern states that copies of the filing were served upon Southern's

customers and interested state commissions.

Any person desiring to be heard or to protest said filing should file a motion to intervene or a protest with the Federal Energy Regulatory Commission, 888 First Street, NE., Washington, DC 20426, in accordance with sections 385.214 or 385.211 of the Commission's Rules and Regulations. All such motions or protests must be filed in accordance with section 154.210 of the Commission's Regulations. Protests will be considered by the Commission in determining the appropriate action to be taken, but will not serve to make protestants parties to the proceedings. Any person wishing to become a party must file a motion to intervene. Copies of this filing are on file with the commission and are available for public inspection in the Public Reference Room. This filing may be viewed on the web at *http://www.ferc.fed.us/online/rims.htm* (call 202–208–2222 for assistance). Comments and protests may be filed electronically via the internet in lieu of paper. See, 18 CFR 385.2001(a)(1)(iii) and the instructions on the Commission's web site at *http://www.fer.fed.us/efi/doorbell.htm.*

David P. Boergers,

Secretary.

[FR Doc. 00–31411 Filed 12–8–00; 8:45 am]

BILLING CODE 6717–01–M

DEPARTMENT OF ENERGY

Federal Energy Regulatory Commission

[Docket No. RP01–128–000]

Southern Natural Gas Company; Notice of Proposed Changes to FERC Gas Tariff

December 5, 2000.

Take notice that on November 30, 2000 Southern Natural Gas Company (Southern) tendered for filing to become part its FERC Gas Tariff, Seventh Revised Volume No. 1, the following sheets, with an effective date of January 1, 2001:

Fifty-third Revised Sheet No. 14
Seventy-fourth Revised Sheet No. 15
Fifty-third Revised Sheet No. 16
Seventy-fourth Revised Sheet No. 17
Thirty-seventh Revised Sheet No. 18
Eighth Revised Sheet No. 22

Southern states that the proposed tariff sheets implement the Gas Research Institute's (GRI) revised surcharges for 2001. The 2001 GRI Funding Formula consists of surcharges of (i) .70¢ per Dth applicable to the commodity/usage portion of firm service rates and the interruptible rates and (ii) either 9.0¢ per Dth for high load factor customers or 5.5¢ per Dth for low load factor customers on the demand/reservation component of firm service rates. The 2001 GRI Funding Formula provides for a surcharge of 1.1¢ per Dth on service rates for small customers. The Commission authorized these surcharges in Docket No. RP00–313–00 to be effective January 1, 2001. Consistent with the Commission's order dated September 19, 2000, Southern has proposed these tariff sheets to be effective January 1, 2001.

Any person desiring to be heard or to protest said filing should file a motion to intervene or a protest with the Federal Energy Regulatory Commission, 888 First Street, NE., Washington, DC 20426, in accordance with Sections 385.214 or 385.211 of the Commission's Rules and Regulations. All such motions or protests must be filed in accordance with Section 154.210 of the Commission's Regulations. Protests will be considered by the Commission in determining the appropriate action to be taken, but will not serve to make protestants parties to the proceedings. Any person wishing to become a party must file a motion to intervene. Copies of this filing are on file with the Commission and are available for public inspection in the Public Reference Room. This filing may be viewed on the web at *http://www.ferc.fed.us/online/rims.htm* (call 202–208–2222 for assistance). Comments and protests may be filed electronically via the internet in lieu of paper. See, 18 CFR 385.2001(a)(1)(iii) and the instructions on the Commission's web site at *http://www.ferc.fed.us/efi/doorbell.htm.*

David P. Boergers,

Secretary.

[FR Doc. 00–31434 Filed 12–8–00; 8:45 am]

BILLING CODE 6717–01–M

DEPARTMENT OF ENERGY

Federal Energy Regulatory Commission

[Docket No. RP01–130–000]

Southern Natural Gas Company, Notice of Settlement Compliance Filing

December 5, 2000.

Take notice that on November 30, 2000, Southern Natural Gas Company (Southern) filed to continue the existing GSR surcharge of $.0004/Dth to be effective January 1, 2001 and to report an overcollection of GSR revenues of approximately $120,000 during 2000 which will be refundable on March 31, 2001.

Southern asserts that the purpose of this filing is to comply with the commission's Order issued on September 29, 1995, which approved the Stipulation and Agreement (Settlement) filed by Southern on March 15, 1995 in Docket Nos. RP89–224–012, *et al.* In accordance with Article VII of the Settlement, Southern has made this filing to recover a GSR volumetric surcharge based on an estimate of its 2001GSR costs. Southern also indicates, based on estimated data, a GSR surcharge refund for GSR overcollections during 2000 will be made on March 31, 2001 in the amount of approximately $120,000.

Southern states that copies of the filing were served upon Southern's customers, intervening parties and interested state commissions.

Any person desiring to be heard or to protest said filing should file a motion to intervene or a protest with the Federal Energy Regulatory Commission, 888 First Street, NE., Washington, DC 20426, in accordance with Sections 385.214 or 385.211 of the commission's Rules and Regulations. All such motions or protests must be filed on or before December 12, 2000. Protests will be considered by the Commission in determining the appropriate action to be taken, but will not serve to make protestants parties to the proceedings. Any person wishing to become a party must file a motion to intervene. Copies of this filing are on file with the Commission and are available for public inspection in the Public Reference Room. This filing may be viewed on the web at *http://www.ferc.fed.us/online/rims.htm* (call 202–208–2222 for assistance). Comments and protests may be filed electronically via the internet in lieu of paper. See, 18 CFR 385.2001(a)(1)(iii) and the instructions on the Commission's web site at *http://www.ferc.fed.us/efi/doorbell.htm.*

David P. Boergers,

Secretary.

[FR Doc. 00–31436 Filed 12–8–00; 8:45 am]

BILLING CODE 6717–01–M

DEPARTMENT OF ENERGY

Federal Energy Regulatory Commission

[Docket No. RP01–129–000]

Tennessee Gas Pipeline Company; Notice of Cashout Report

December 5, 2000.

Take notice that on November 30, 2000, Tennessee Gas Pipeline Company (Tennessee) tendered for filing its seventh annual cashout report for the September 1999 through August 2000 Period.

Tennessee states that the cashout report is the second filed by Tennessee under the new cashout reconciliation methodology established pursuant to the March 25, 1999 cashout settlement on the Tennessee system. The cashout report reflects a net cashout gain during the period of $209,435. Pursuant to the March 25, 1999 cashout settlement, there is a cumulative loss carry forward from prior cashout operations of $978,801.

Any person desiring to be heard or to protest said filing should file a motion to intervene or a protest with the Federal Energy Regulatory Commission, 888 First Street, N.E., Washington, D.C. 20426, in accordance with Sections 385.214 or 385.211 of the Commission's Rules and Regulations. All such motions or protests must be filed on or before December 12, 2000. Protests will be considered by the Commission in determining the appropriate action to be taken, but will not serve to make protestants parties to the proceedings. Any person wishing to become a party must file a motion to intervene. Copies of this filing are on file with the Commission and are available for public inspection in the Public Reference Room. This filing may be viewed on the web at http://www.ferc.fed.us/online/rims.htm (call 202–208–2222 for assistance). Comments and protests may be filed electronically via the internet in lieu of paper. See, 18 CFR 385.2001(a)(1)(iii) and the instructions on the Commission's web site at http://www.ferc.fed.us/efi/doorbell.htm.

David P. Boergers,

Secretary.

[FR Doc. 00–31435 Filed 12–8–00; 8:45 am]

BILLING CODE 6717–01–M

DEPARTMENT OF ENERGY

Federal Energy Regulatory Commission

[Docket No. RP01–134–000]

Texas Gas Transmission Corporation; Notice of Proposed Changes In FERC Gas Tariff

December 5, 2000.

Take notice that on November 30, 2000, Texas Gas Transmission Corporation (Texas Gas) tendered for filing as part of its FERC Gas Tariff, First Revised Volume No. 1, the revised tariff sheets listed in Appendix A to the filing, with an effective date of January 1, 2001.

Texas Gas states that the revised tariff sheets are being filed pursuant to Section 22 of the General Terms and Conditions of Texas Gas's FERC Gas Tariff, First Revised Volume No. 1, to reflect the 2001 General RD&D Funding Units authorized in the Order Approving Settlement issued by the Commission on April 29, 1998, in Docket No. RP97–149–003, *et al.,* at 83 FERC ¶ 61,093.

Texas Gas states that copies of this filing have been served upon Texas Gas's jurisdictional customers and interested state commissions.

Any person desiring to be heard or to protest said filing should file a motion to intervene or a protest with the Federal Energy Regulatory Commission, 888 First Street, NE., Washington, DC 20426, in accordance with sections 385.214 or 385.211 of the Commission's Rules and Regulations. All such motions or protests must be filed in accordance with section 154.210 of the Commission's Regulations. Protests will be considered by the Commission in determining the appropriate action to be taken, but will not serve to make protestants parties to the proceedings. Any person wishing to become a party must file a motion to intervene. Copies of this filing are on file with the Commission and are available for public inspection in the Public Reference Room. This filing may be viewed on the web at *http://www.ferc.fed.us/online/rims.htm* (call 202–208–2222 for assistance). Comments and protests may be filed electronically via the internet in lieu of paper. See, 18 CFR 385.2001(a)(1)(iii) and the instructions on the Commission's web site at *http://www.ferc.fed.us/efi/doorbell.htm.*

David P. Boergers,

Secretary.

[FR Doc. 00–31413 Filed 12–8–00; 8:45 am]

BILLING CODE 6717–01–M

DEPARTMENT OF ENERGY

[Docket No. RP01–135–000]

Texas Gas Transmission Corporation; Notice of Proposed Changes in FERC Gas Tariff

December 5, 2000.

Take notice that on November 30, 2000, Texas Gas Transmission Corporation (Texas Gas) tendered for filing as part of its FERC Gas Tariff, First Revised Volume No. 1, the revised tariff sheets listed on Appendix A to the filing, with an effective date of January 1, 2001.

Texas Gas states that this filing is made to implement the provisison of Article XI, Section 1(a), of the Offer of Settlement and Explanatory Statement in Docket No. RP97–344, *et al.,* and, as presented in the referenced Appendix D, page 2, of said Settlement, Texas Gas, in the instant filing, proposes to reflect the unit rate reductions, effective January 1, 2001, resulting from the termination of the HIOS T–17 contract. The attached tariff sheets reflect reductions to: NNS and FT demand rates of ($0.0006); SGT rates of ($0.0012); average STF and IT peak demand rates of ($0.0010); average STF and IT off-peak demand rates of ($0.0003); SNS 1/16 hourly flow demand rates of ($0.0006); SNS 1/16 up to 1/12 hourly flow demand rates of ($0.0008); and SNS greater than 1/12 hourly flow demand rates of ($0.0012).

Texas Gas states that copies of this filing have been served upon all of Texas Gas's jurisdictional customers, all parties on the Commission's official service list in this proceeding, interested state commissions, and the FERC Staff.

Any person desiring to be heard or to protest said filing should file a motion to intervene or a protest with the Federal Energy Regulatory Commission, 888 First Street, NE., Washington, DC 20426, in accordance with Sections 385.214 or 385.211 of the Commission's Rules and Regulations. All such motions or protests must be filed in accordance with Section 154.210 of the Commission's Regulations. Protests will be considered by the Commission in determining the appropriate action to be taken, but will not serve to make protestants parties to the proceedings. Any person wishing to become a party must file a motion to intervene. Copies of this filing are on file with the Commission and are available for public inspection in the Public Reference Room. This filing may be viewed on the web at http://www.ferc.fed.us/online/rims.htm (call 202–208–2222 for assistance). Comments and protests may

be filed electronically via the internet in lieu of paper. See, 18 CFR 385.2001(a)(1)(ii) and the instructions on the Commission's web site at http://www.ferc.fed.us/efi/doorbell.htm.

David P. Boergers,

Secretary.

[FR Doc. 00–31414 Filed 12–8–00; 8:45 am]

BILLING CODE 6717–01–M

DEPARTMENT OF ENERGY

Federal Energy Regulatory Commission

[Docket No. RP01–131–000]

Transcontinental Gas Pipe Line Corporation; Notice of Proposed Changes in FERC Gas Tariff

December 5, 2000.

Take notice that on November 30, 2000, Transcontinental Gas pipe Line Corporation (Transco) tendered for filing as part of its FERC Gas Tariff, Third Revised Volume No. 1, certain revised tariff sheets are enumerated in Appendix A attached to the filing. Such tariff sheets are proposed to be effective January 1, 2001.

Transco states that the purpose of the instant filing is to reflect the 2001 GRI surcharges approved by the Commission's Order issued on September 19, 1999, in Docket No. RP00–313–000. Also, in accordance with GRI's 1993 settlement, Transco has calculated the firm transportation service load factors on the actual volumes transported during the 12 month period October 1999 through September 2000.

Transco states that copies of the filing are being mailed to affected customers and interested State Commissions.

Any person desiring to be heard or to protest said filing should file a motion to intervene or a protest with the Federal Energy Regulatory Commission, 888 First Street, NE., Washington, DC 20426, in accordance with sections 385.214 or 385.211 of the Commission's Rules and Regulations. All such motions or protests must be filed in accordance with section 154.210 of the Commission's Regulations. Protests will be considered by the Commission in determining the appropriate action to be taken, but will not serve to make protestants parties to the proceedings. Any person wishing to become a party must file a motion to intervene. Copies of this filing are on file with the Commission and are available for public inspection in the Public Reference Room. This filing may be viewed on the web at *http://www.ferc.fed.us/online/rims.htm* (call 202–208–2222 for assistance). Comments and protests may be filed electronically via the internet in lieu of paper. See, 18 CFR 385.2001(a)(1)(iii) and the instructions on the Commission's web site at *http://www.ferc.fed.us/efi/doorbell.htm.*

David P. Boergers,

Secretary.

[FR Doc. 00–31410 Filed 12–8–00; 8:45 am]

BILLING CODE 6717–01–M

DEPARTMENT OF ENERGY

Federal Energy Regulatory Commission

[Docket No. RP01–139–000]

Transwestern Pipeline Company; Notice of Proposed Changes in FERC Gas Tariff

December 5, 2000.

Take notice that on November 30, 2000 Transwestern Pipeline Company (Transwestern) tendered for filing to become part of Transwestern's FERC Gas Tariff Second Revised Volume No. 1, the following tariff sheets to be effective January 1, 2001:

124 Revised Sheet No. 5
29 Revised Sheet No. 5A
21 Revised Sheet No. 5A.02
20 Revised Sheet No. 5A.03
26 Revised Sheet No. 5B

Transwestern states that the purpose of this filing is to set forth the approved 2001 Gas Research Institute (GRI) surcharges for the 2001 calendar year to be effective January 1, 2001 in accordance with the Commission's Order approving The Gas Research Institute's Year 2001 Research, Development and Demonstration Program and 2001–2005 Five-Year Plan issued on September 29, 2000 in Docket No. RP00–313–000.

Transwestern states that copies of the filing were served upon Transwestern's customers and interested State Commissions.

Any person desiring to be heard or to protest said filing should file a motion to intervene or a protest with the Federal Energy Regulatory Commission, 888 First Street, N.E., Washington, D.C. 20426, in accordance with Sections 385.214 or 385.211 of the Commission's Rules and Regulations. All such motions or protests must be filed in accordance with Section 154.210 of the Commission's Regulations. Protests will be considered by the Commission in determining the appropriate action to be taken, but will not serve to make protestants parties to the proceedings. Any person wishing to become a party must file a motion to intervene. Copies of this filing are on file with the Commission and are available for public inspection in the Public Reference Room. This filing may be viewed on the web at http://www.ferc.fed.us/online/rims.htm (call 202–208–2222 for assistance). Comments and protests may be filed electronically via the internet in lieu of paper. See, 18 CFR 385.2001(a)(1)(iii) and the instructions on the Commission's web site at http://www.ferc.fed.us/efi/doorbell.htm.

David P. Boergers,

Secretary.

[FR Doc. 00–31417 Filed 12–8–00; 8:45 am]

BILLING CODE 6717–01–M

DEPARTMENT OF ENERGY

Federal Energy Regulatory Commission

[Docket No. RP01–133–000]

Williams Gas Pipelines Central, Inc.; Notice of Proposed Changes in FERC Gas Tariff

December 5, 2000.

Take notice that on November 30, 2000, Williams Gas Pipelines Central, Inc. (Williams) tendered for filing as part of its FERC Gas Tariff, Original Volume No. 1, the following tariff sheet to become effective January 1, 2001:

Seventeenth Revised Sheet No. 6A

Williams states that pursuant to Order Approving Settlement, issued April 29, 1998, in Docket No. RP97–149–003, *et al.* and Williams FERC Gas Tariff, Original Volume No. 1, Article 25, Williams is filing to reflect the new GRI surcharges to be collected on nondiscounted transportation services.

Williams states that copies of this filing have been served on all of Williams' jurisdictional customers and interested state commissions.

Any person desiring to be heard or to protest said filing should file a motion to intervene or a protest with Federal Regulatory Commission, 888 First Street, NE., Washington, DC 20426, in accordance with sections 385.214 or 385.211 of the Commission's Rules and Regulations. All such motions or protests must be filed in accordance with section 154.210 of the Commission's Regulations. Protests will considered by the Commission in determining the appropriate action to be taken, but will not serve to make protestants parties to the proceedings. Any person wishing to become a party must file a motion to intervene. Copies of this filing are on file with the

Commission and are available for public inspection in the Public Reference Room. This filing may be viewed on the web at *http://www.ferc.fed.us/online/rims.htm* (call 202–208–2222 for assistance). Comments and protests may be filed electronically via the internet in lieu of paper. See, 18 CFR 385.2001(a)(1)(iii) and the instructions on the Commission's web site at *http://www.ferc.fed.us/efi/doorbell.htm.*

David P. Boergers,

Secretary.

[FR Doc. 00–31412 Filed 12–8–00; 8:45 am]

BILLING CODE 6717–01–M

DEPARTMENT OF ENERGY

Federal Energy Regulatory Commission

[Docket No. ER01–136–001, et al.]

Dynegy Midwest Generation, Inc., et al.; Electric Rate and Corporate Regulation Filings

December 4, 2000.

Take notice that the following filings have been made with the Commission:

1. Dynegy Midwest Generation, Inc.

[Docket No. ER01–136–001]

Take notice that on November 29, 2000, Dynegy Midwest Generation, Inc. (DMG) submitted a filing containing designations pursuant to Order No. 614, in compliance with the letter order issued November 16, 2000 in Docket No. ER01–136–000 in which the Commission accepted the filing, effective January 1, 2001.

Comment date: December 20, 2000, in accordance with Standard Paragraph E at the end of this notice.

2. Allegheny Energy Supply Company, LLC; The Potomac Edison Company, West Penn; Power Company (dba Allegheny Power)

[Docket No. ER01–432–001]

Take notice that on November 29, 2000, Allegheny Energy Supply Company, LLC (Allegheny Energy Supply), filed Amendment No. 1 to First Revised Rate Schedule FERC No. 3. Amendment No. 1 redesignates the cover page and Table of Contents to comply with the Commission's Order No. 614 and corrects page numbers shown on Sheet No. 3.

Copies of the filing have been provided to the Public Utilities Commission of Ohio, the Pennsylvania Public Utility Commission, the Maryland Public Service Commission, the Virginia State Corporation Commission, the West Virginia Public Service Commission and all parties of record.

Comment date: December 20, 2000, in accordance with Standard Paragraph E at the end of this notice.

3. Ohio Valley Electric Corporation; Indiana-Kentucky Electric Corporation

[Docket No. ER01–517–000]

Take notice that on November 28, 2000, Ohio Valley Electric Corporation (including its wholly-owned subsidiary, Indiana-Kentucky Electric Corporation) (OVEC) tendered for filing a Service Agreement for Non-Firm Point-To-Point Transmission Service, dated October 31, 2000 (the Service Agreement) between The Energy Authority, Inc. (Energy Authority) and OVEC.

OVEC proposes an effective date of October 31, 2000 and requests waiver of the Commission's notice requirement to allow the requested effective date. The Service Agreement provides for non-firm transmission service by OVEC to Energy Authority. In its filing, OVEC states that the rates and charges included in the Service Agreement are the rates and charges set forth in OVEC's Open Access Transmission Tariff.

A copy of this filing was served upon Energy Authority.

Comment date: December 19, 2000, in accordance with Standard Paragraph E at the end of this notice.

4. Boston Edison Company

[Docket No. ER01–523–000]

Take notice that on November 29, 2000, Boston Edison Company (Boston Edison) tendered for filing an Interconnection Agreement between Sithe Fore River Development LLC and Boston Edison. Boston Edison has requested waiver of the Commission's regulations to permit an effective date of December 31, 2000 of the Interconnection Agreement, and that the public comment period for this proceeding to end December 25, 2000.

Comment date: December 20, 2000, in accordance with Standard Paragraph E at the end of this notice.

5. PacifiCorp

[Docket No. ER01–524–000]

Take notice that on November 29, 2000, PacifiCorp tendered for filing in accordance with 18 CFR Part 35 of the Commission's Rules and Regulations, a Notice of Filing, and Mutual Netting/Closeout Agreements (Netting Agreements) with Tenaska Power Services Co. (TNSK) and Merrill Lynch Capital Services (MLCS).

Copies of this filing were supplied to the Washington Utilities and Transportation Commission and the Public Utility Commission of Oregon.

Comment date: December 20, 2000, in accordance with Standard Paragraph E at the end of this notice.

6. Commonwealth Edison Company

[Docket No. ER01–525–000]

Take notice that on November 29, 2000, Commonwealth Edison Company (ComEd) submitted for filing 10 Short-Term Firm Transmission Service Agreements with Constellation Power Source, Inc. (CPS), The Detroit Edison Company (DE), Edison Mission Marketing & Trading, Inc. (EMMT), LG&E Energy Marketing Inc. (LGE), MidAmerican Energy Company (MEC), Northern Indiana Public Service Company (NIPS), Reliant Energy Services, Inc. (RES), Southern Company Energy Marketing L.P. (SCEM), Southern Illinois Power Cooperative (SIPC), and The Energy Authority (TEA), under the terms of ComEd's Open Access Transmission Tariff (OATT). These Agreements have been amended to provide that Transmission Customers must confirm accepted requests for service within the reservation timing requirements established in the Commission's Order No. 638. These Agreements amend and supersede agreements already on file with the Commission.

ComEd requests an effective date of May 30, 2000 for the Agreements, and accordingly, seeks waiver of the Commission's notice requirements.

Comment date: December 20, 2000, in accordance with Standard Paragraph E at the end of this notice.

7. PacifiCorp

[Docket No. ER01–526–000]

Take notice that on November 29, 2000, PacifiCorp tendered for filing in accordance with 18 CFR Part 35 of the Commission's Rules and Regulations, umbrella Transmission Service Agreements with Sacramento Municipal Utility District (SMUD) under PacifiCorp's FERC Electric Tariff, Second Revised Volume No. 11 (Tariff).

Copies of this filing were supplied to the Washington Utilities and Transportation Commission and the Public Utility Commission of Oregon.

Comment date: December 20, 2000, in accordance with Standard Paragraph E at the end of this notice.

8. Ameren Services Company

[Docket No. ER01–527–000]

Take notice that on November 29, 2000, Ameren Services Company (ASC) tendered for filing Service Agreements for Firm Point-to-Point Transmission Service and Non-Firm Point-to-Point Transmission Service between ASC and

H.Q. Energy Services (U.S.) Inc. ASC asserts that the purpose of the Agreements is to permit ASC to provide transmission service to H.Q. Energy Services (U.S.) Inc. pursuant to Ameren's Open Access Transmission Tariff.

Comment date: December 20, 2000, in accordance with Standard Paragraph E at the end of this notice.

9. PJM Interconnection, L.L.C.

[Docket No. ER01–528–000]

Take notice that on November 29, 2000, PJM Interconnection, L.L.C. (PJM), submitted for filing an executed interconnection service agreement between PJM and Allegheny Energy Supply Company.

Copies of this filing were served upon Allegheny Energy Supply Company and the state electric utility regulatory commissions within the PJM control area.

Comment date: December 20, 2000, in accordance with Standard Paragraph E at the end of this notice.

10. PJM Interconnection, L.L.C.

[Docket No. ER01–529–000]

Take notice that on November 29, 2000, PJM Interconnection, L.L.C. (PJM), submitted for filing an executed interconnection service agreement between PJM and Southern Company Energy Marketing L.P.

Copies of this filing were served upon Southern Company Energy Marketing L.P. and the state electric utility regulatory commissions within the PJM control area.

Comment date: December 20, 2000, in accordance with Standard Paragraph E at the end of this notice.

11. Entergy Services, Inc.

[Docket No. ER01–530–000]

Take notice that on November 29, 2000, Entergy Services, Inc. (Entergy Services), on behalf of Entergy Arkansas, Inc (Entergy Arkansas), tendered for filing a Long-Term Market Rate Sales Agreement between Entergy Arkansas and City of Benton, Arkansas for the sale of power under Entergy Services' Rate Schedule SP.

Comment date: December 20, 2000, in accordance with Standard Paragraph E at the end of this notice.

12. American Electric Power Service Corporation

[Docket No. ER01–531–000]

Take notice that on November 29, 2000, the American Electric Power Service Corporation (AEPSC) tendered for filing a service agreement with DTE Energy Trading, Inc. by the AEP Companies under the Wholesale Market Tariff of the AEP Operating Companies (Power Sales Tariff). The Power Sales Tariff was accepted for filing effective October 10, 1997 and has been designated AEP Operating Companies' FERC Electric Tariff Original Volume No. 5.

AEPSC respectfully requests waiver of notice to permit this service agreement to be made effective on or prior to November 1, 2000.

A copy of the filing was served upon the Parties and the State Utility Regulatory Commissions of Arkansas, Indiana, Kentucky, Louisiana, Michigan, Ohio, Oklahoma, Tennessee, Texas, Virginia and West Virginia.

Comment date: December 20, 2000, in accordance with Standard Paragraph E at the end of this notice.

13. PJM Interconnection, L.L.C.

[Docket No. ER01–532–000]

Take notice that on November 29, 2000, PJM Interconnection, L.L.C. (PJM), submitted for filing an executed interconnection service agreement between PJM and Mantua Creek Generating Company LP.

Copies of this filing were served upon Mantua Creek Generating Company LP and the state electric utility regulatory commissions within the PJM control area.

Comment date: December 20, 2000, in accordance with Standard Paragraph E at the end of this notice.

14. PJM Interconnection, L.L.C.

[Docket No. ER01–533–000]

Take notice that on November 29, 2000, PJM Interconnection, L.L.C. (PJM), submitted for filing an executed interim interconnection service agreement between PJM and Reliant Energy Hunterstown, LLC.

Copies of this filing were served upon Reliant Energy Hunterstown, LLC and the state electric utility regulatory commissions within the PJM control area.

Comment date: December 20, 2000, in accordance with Standard Paragraph E at the end of this notice.

15. Deseret Generation & Transmission Co-operative, Inc.

[Docket No. ER01–534–000]

Take notice that on November 29, 2000, Deseret Generation & Transmission Co-operative, Inc. (Deseret) tendered for filing an amendment to a long-term Service Agreement between Deseret and Constellation Power Source, Inc., designated Service Agreement No. 5 to FERC Electric Tariff, Original Volume No. 3.

Deseret requests an effective date of September 1, 2000.

Comment date: December 20, 2000, in accordance with Standard Paragraph E at the end of this notice.

16. Northern Maine Independent System Administrator, Inc.

[Docket No. ER01–535–000]

Take notice that on November 29, 2000, Northern Maine Independent System Administrator, Inc., (NMISA) tendered for filing an amendment to its Market Rules, FERC Electric Rate Schedule No. 2.

NMISA requests an effective date of December 1, 2000.

Comment date: December 20, 2000, in accordance with Standard Paragraph E at the end of this notice.

17. Allegheny Energy Service Corporation, on Behalf of Allegheny Energy Supply Company LLC

[Docket No. ER01–536–000]

Take notice that on November 29, 2000, Allegheny Energy Service Corporation on behalf of Allegheny Energy Supply Company, LLC (Allegheny Energy Supply Company) filed First Revised Service Agreement No. 7 to complete the filing requirement for one (1) new Customer of the Market Rate Tariff under which Allegheny Energy Supply offers generation services.

Allegheny Energy Supply maintains the effective date of Service Agreement No. 7 of December 6, 1999 for service to Wabash Valley Power Association, Inc.

Copies of the filing have been provided to the Public Utilities Commission of Ohio, the Pennsylvania Public Utility Commission, the Maryland Public Service Commission, the Virginia State Corporation Commission, the West Virginia Public Service Commission, and all parties of record.

Comment date: December 20, 2000, in accordance with Standard Paragraph E at the end of this notice.

18. Westmoreland—LG&E Partners

[Docket No. ER01–537–000]

Take notice that on November 30, 2000, Westmoreland—LG&E Partners submitted for filing, pursuant to Section 205 of the Federal Power Act, and Part 35 of the Commission's regulations, a Second Amendment and Restatement of the Power Purchase and Operating Agreement which governs power sales to Virginia Electric and Power Company from the Roanoke Valley II facility. Applicant requests certain waivers of the Commission's regulations and a blanket authorization of Federal Power Act Section 204.

Comment date: December 21, 2000, in accordance with Standard Paragraph E at the end of this notice.

19. Central Hudson Gas & Electric Corporation; Consolidated Edison Company of New York, Inc.; Long Island Lighting Company; New York State Electric & Gas Corporation; Niagara Mohawk Power Corporation; Orange and Rockland Utilities, Inc.; Rochester Gas and Electric Corporation

[Docket No. ER01–547–000]

Take notice that on November 27, 2000, the Members of the Transmission Owners Committee of the Energy Association of New York State, formerly known as the Member Systems of the New York Power Pool (Member Systems) tendered for filing revised transmission service agreements. The Member Systems state that these tariff sheets are in compliance with the Commission's October 26, 2000 order in this proceeding. *Central Hudson Gas & Electric Corp., et al.,* 93 FERC ¶ 61,090 (2000).

A copy of this filing was served upon all persons on the official service list in the captioned proceeding.

Comment date: December 18, 2000, in accordance with Standard Paragraph E at the end of this notice.

Standard Paragraphs

E. Any person desiring to be heard or to protest such filing should file a motion to intervene or protest with the Federal Energy Regulatory Commission, 888 First Street, NE., Washington, DC 20426, in accordance with Rules 211 and 214 of the Commission's Rules of Practice and Procedure (18 CFR 385.211 and 385.214). All such motions or protests should be filed on or before the comment date. Protests will be considered by the Commission in determining the appropriate action to be taken, but will not serve to make protestants parties to the proceeding. Any person wishing to become a party must file a motion to intervene. Copies of these filings are on file with the Commission and are available for public inspection. This filing may also be viewed on the Internet at *http://www.ferc.fed.us/online/rims.htm* (call 202–208–2222 for assistance).

David P. Boergers,

Secretary.

[FR Doc. 00–31391 Filed 12–8–00; 8:45 am]

BILLING CODE 6717–01–P

DEPARTMENT OF ENERGY

Federal Energy Regulatory Commission

[Project No. 2651–006 Indiana]

Indiana Michigan Power Company; Notice of Availability of Final Environmental Assessment

December 5, 2000.

In accordance with the National Environmental Policy Act of 1969 and the Federal Energy Regulatory Commission's (Commission) regulations, 18 CFR Part 380 (Order No. 486, 52 FR 47897), the Office of the Energy Projects has reviewed the application for a new license for the Elkhart Hydroelectric Project, and has prepared a final environmental assessment (FEA). The project is located on the St. Joseph River in the City of Elkhart and Elkhart County, Indiana.

On April 10, 2000, the Commission staff issued a draft environmental assessment (DEA) for the project and requested that comments be filed with the Commission within 45 days. Comments on the DEA were filed by Walter D. Gildner, Indiana Department of Natural Resources, American Electric Power/ Indiana Michigan Power Company, and the City of Elkhart and are addressed in the FEA.

Copies of the FEA are available for review at the Commission's Public Reference Room, located at 888 First Street, N.E., Washington, D.C. 20426, or by calling (202) 208–1371. The FEA may be viewed on the web at http://www.ferc.fed.us/online/rims.htm [please call (202) 208–2222 for assistance].

David P. Boergers,

Secretary.

[FR Doc. 00–31421 Filed 12–8–00; 8:45 am]

BILLING CODE 6717–01–M

DEPARTMENT OF ENERGY

Federal Energy Regulatory Commission

Notice of Application Ready for Environmental Analysis and Soliciting Comments, Recommendations, Terms and Conditions, and Prescriptions

December 5, 2000.

Take notice that the following hydroelectric application has been filed with the Commission and is available for public inspection.

a. *Type of Application:* Major New License.

b. *Project No.:* 2055–010.

c. *Date filed:* November 24, 1998.

d. *Applicant:* Idaho Power Company.

e. *Name of Project:* C.J. Strike Hydroelectric Project.

f. *Location:* On the Snake River, in Owyhee County, Oregon, between the towns of Grandview and Bruneau. The project occupies about 3,000 acres of Federal land administered by the Bureau of Land Management.

g. *Filed Pursuant to:* Federal Power Act 16 U.S.C. 791 (a)–825(r).

h. *Applicant Contact:* Lewis Wardle, Hydro Relicensing Department, Idaho Power Company, P.O. Box 70, Boise, ID 83707 (208) 388–2964.

i. *FERC Contact:* John Blair, 202–219–2845, john.blair@ferc.fed.us.

j. *Deadline for filing comments, recommendations, terms and conditions and prescriptions:* 60 days from the issuance date of this notice.

All documents (original and eight copies) should be filed with: David P. Boergers, Secretary, Federal Energy Regulatory Commission, 888 First Street, NE, Washington, DC 20426.

The Commission's Rules of Practice require all intervenors filing documents with the Commission to serve a copy of that document on each person on the official service list for the project. Further, if an intervenor files comments or documents with the Commission relating to the merits of an issue that may affect the responsibilities of a particular resource agency, they must also serve a copy of the document on that resource agency.

Comments, recommendations, terms and conditions and prescriptions may be filed electronically via the internet in lieu of paper. See, 18 CFR 385.2001(a)(1)(iii) and the instructions on the Commission's web site at http://www.ferc.fed.us/efi/doorbell.htm.

k.This application has been accepted, and is ready for environmental analysis at this time.

l. *The project consists of the following facilities:* (1) A 3,220-foot-long earthfill dam with a maximum height of 115 feet, which includes a 340-foot-wide and 78-foot-high reinforced concrete spillway consisting of eight 34-foot-wide bays; (2) a 55-foot-wide, 158-foot-long and 65-foot-high reinforced concrete intake structure located at the left abutment of the dam, consisting of three intakes; (3) three riveted steel penstocks connecting the intakes to the generating units; (4) a 198-foot-long, 64-foot-wide, and 68-foot-high reinforced concrete powerhouse, located at the left abutment of the dam, containing 3 vertical fixed-blade turbines with a total nameplate capacity of 82.8 megawatts; (5) a reservoir extending about 32 miles upstream on the Snake River and about 12 miles upstream on the Bruneau River, with a

surface area of 7,500 acres at normal water surface elevation of 2,455 feet above mean sea level; and (6) two 138-kilovolt (kV) transmission lines extending from the project 65 miles northwesterly to the Caldwell terminal substation and about 25 miles northeasterly to the 138 kV lines at Mountain Home.

m. A copy of the application is available for inspection and reproduction at the Commission's Public Reference Room, located at 888 First Street, NE, Room 2–A, Washington, DC 20426, or by calling (202) 208–1371. The application may be viewed on http://www.ferc.fed.us/online/rims.htm (call (202) 208–2222 for assistance). Copies are also available for inspection and reproduction at the address in item h above.

n. The Commission directs, pursuant to Section 4.34(b) of the Regulations (see Order No. 533 issued May 8, 1991, 56 FR 23108, May 20, 1991) that all comments, recommendations, terms and conditions and prescriptions concerning the application be filed with the Commission within 60 days from the issuance date of this notice. All reply comments must be filed with Commission within 105 days from the date of this notice.

Anyone may obtain an extension of time for these deadlines from the Commission only upon a showing of good cause or extraordinary circumstances in accordance with 18 CFR 385.2008.

All filings must: (1) Bear in all capital letters the title ''COMMENTS'', ''REPLY COMMENTS'', ''RECOMMENDATIONS,'' ''TERMS AND CONDITIONS,'' or ''PRESCRIPTIONS;'' (2) set forth in the heading the name of the applicant and the project number of the application to which the filing responds; (3) furnish the name, address, and telephone number of the person submitting the filing; and (4) otherwise comply with the requirements of 18 CFR 385.2001 through 385.2005. All comments, recommendations, terms and conditions or prescriptions must set forth their evidentiary basis and otherwise comply with the requirements of 18 CFR 4.34(b). Agencies may obtain copies of the application directly from the applicant. Each filing must be accompanied by proof of service on all persons listed on the service list prepared by the Commission in this proceeding, in accordance with 18 CFR 4.34(b), and 385.2010.

David P. Boergers,

Secretary.

[FR Doc. 00–31419 Filed 12–8–00; 8:45 am]

BILLING CODE 6717–01–M

DEPARTMENT OF ENERGY

Federal Energy Regulatory Commission

Sunshine Act Meeting

December 6, 2000.

The following notice of meeting is published pursuant to section 3(a) of the Government in the Sunshine Act (Pub. L. No. 94–409), 5 U.S.C. 552B:

AGENCY HOLDING MEETING: Federal Energy Regulatory Commission.

DATE AND TIME: December 13, 2000, 10 a.m.

PLACE: Room 2C, 888 First Street, NE., Washington, DC 20426.

STATUS: Open.

MATTERS TO BE CONSIDERED: Agenda.

Note—Items listed on the agenda may be deleted without further notice.

CONTACT PERSON FOR MORE INFORMATION: David P. Boergers, Secretary, Telephone (202) 208–0400, for a recording listing items stricken from or added to the meeting, call (202) 208–1627.

This is a list of matters to be considered by the Commission. It does not include a listing of all papers relevant to the items on the agenda; however, all public documents may be examined in the Reference and Information Center.

755th—Meeting December 13, 2000, Regular Meeting, (10 a.m.)

Consent Agenda—Markets, Tariffs and Rates—Electric

CAE–1.
DOCKET# ER01–147, 000, SOUTHERN ENERGY DELTA, L.L.C. AND SOUTHERN ENERGY POTRERO, L.L.C.
CAE–2.
DOCKET# ER01–168, 000, TENASKA FRONTIER PARTNERS, LTD.
CAE–3.
DOCKET# ER01–171, 000, CONSUMERS ENERGY COMPANY AND CMS MARKETING, SERVICES AND TRADING COMPANY
CAE–4.
OMITTED
CAE–5.
DOCKET# ER00–2814, 000, COMMONWEALTH EDISON COMPANY
OTHER#S ER00–2814,001, COMMONWEALTH EDISON COMPANY
ER00–2814, 002, COMMONWEALTH EDISON COMPANY
CAE–6.
DOCKET# ER01–210, 000, PJM INTERCONNECTION, L.L.C.
CAE–7.
OMITTED
CAE–8.
OMITTED
CAE–9.
OMITTED
CAE–10.
DOCKET# ER00–2870, 000, EL PASO ELECTRIC GENERATING COMPANY
CAE–11.
OMITTED
CAE–12.
DOCKET# ER01–369, 000, ISO NEW ENGLAND INC.
CAE–13.
DOCKET# ER01–202, 000, POTOMAC POWER RESOURCES, INC.
CAE–14.
DOCKET# ER00–2064, 000, ILLINOIS POWER COMPANY
OTHER#S ER00–2064, 001, ILLINOIS POWER COMPANY
CAE–15.
DOCKET# ER00–3316, 000, AMERICAN TRANSMISSION COMPANY LLC
CAE–16.
DOCKET# ER01–123, 000, ILLINOIS POWER COMPANY
CAE–17.
OMITTED
CAE–18.
DOCKET# ER00–2062, 000, CENTRAL MAINE POWER COMPANY
OTHER#S ER00–2062, 001, CENTRAL MAINE POWER COMPANY
ER00–2062, 002, CENTRAL MAINE POWER COMPANY
ER00–2062, 003, CENTRAL MAINE POWER COMPANY
CAE–19.
DOCKET# ER00–3735, 000, PJM INTERCONNECTION, L.L.C.
CAE–20.
DOCKET# ER00–1, 002, TRANSENERGIE U.S., LTD.
OTHER#S ER00–1, 003, TRANSENERGIE U.S., LTD.
CAE–21.
DOCKET# EL00–62, 005, ISO NEW ENGLAND, INC.
OTHER#S EL00–62, 013, ISO NEW ENGLAND, INC.
CAE–22.
OMITTED
CAE–23.
DOCKET# RT01–77, 000, SOUTHERN COMPANIES SERVICES, INC.
CAE–24.
DOCKET# ER99–4113, 001, CALIFORNIA POWER EXCHANGE CORPORATION
CAE–25.
DOCKET# EC00–138, 000, SITHE ENERGIES, INC. AND THE SITHE STOCKHOLDERS, EXELON (FOSSIL) HOLDINGS, INC., PEPCO ENERGY COMPANY AND EXELON GENERATION COMPANY, L.L.C.
CAE–26.
DOCKET# ER99–3279, 001, PJM INTERCONNECTION, L.L.C.
CAE–27.
DOCKET# ER99–3144, 003, ALLIANCE COMPANIES, AMERICAN ELECTRIC POWER SERVICE CORPORATION ON BEHALF OF: APPALACHIAN POWER COMPANY, COLUMBUS SOUTHERN

POWER COMPANY, INDIANA MICHIGAN POWER COMPANY, KENTUCKY POWER COMPANY, KINGSPORT POWER COMPANY, OHIO POWER COMPANY, WHEELING POWER COMPANY, CONSUMERS ENERGY COMPANY, THE DETROIT EDISON COMPANY, FIRST ENERGY CORPORATION ON BEHALF OF: THE CLEVELAND ELECTRIC ILLUMINATING COMPANY, OHIO EDISON COMPANY, PENNSYLVANIA POWER COMPANY, THE TOLEDO EDISON COMPANY AND VIRGINIA ELECTRIC AND POWER COMPANY

OTHER#S EC99–80, 003, ALLIANCE COMPANIES, AMERICAN ELECTRIC POWER SERVICE CORPORATION ON BEHALF OF: APPALACHIAN POWER COMPANY, COLUMBUS SOUTHERN POWER COMPANY, INDIANA MICHIGAN POWER COMPANY, KENTUCKY POWER COMPANY, KINGSPORT POWER COMPANY, OHIO POWER COMPANY, WHEELING POWER COMPANY, CONSUMERS ENERGY COMPANY, THE DETROIT EDISON COMPANY, FIRST ENERGY CORPORATION ON BEHALF OF: THE CLEVELAND ELECTRIC ILLUMINATING COMPANY, OHIO EDISON COMPANY, PENNSYLVANIA POWER COMPANY, THE TOLEDO EDISON COMPANY AND VIRGINIA ELECTRIC AND POWER COMPANY

EC99–80, 004, ALLIANCE COMPANIES, AMERICAN ELECTRIC POWER SERVICE CORPORATION ON BEHALF OF: APPALACHIAN POWER COMPANY, COLUMBUS SOUTHERN POWER COMPANY, INDIANA MICHIGAN POWER COMPANY, KENTUCKY POWER COMPANY, KINGSPORT POWER COMPANY, OHIO POWER COMPANY, WHEELING POWER COMPANY, CONSUMERS ENERGY COMPANY, THE DETROIT EDISON COMPANY, FIRST ENERGY CORPORATION ON BEHALF OF: THE CLEVELAND ELECTRIC ILLUMINATING COMPANY, OHIO EDISON COMPANY, PENNSYLVANIA POWER COMPANY, THE TOLEDO EDISON COMPANY AND VIRGINIA ELECTRIC AND POWER COMPANY

EC99–80, 005, ALLIANCE COMPANIES, AMERICAN ELECTRIC POWER SERVICE CORPORATION ON BEHALF OF: APPALACHIAN POWER COMPANY, COLUMBUS SOUTHERN POWER COMPANY, INDIANA MICHIGAN POWER COMPANY, KENTUCKY POWER COMPANY, KINGSPORT POWER COMPANY, OHIO POWER COMPANY, WHEELING POWER COMPANY, CONSUMERS ENERGY COMPANY, THE DETROIT EDISON COMPANY, FIRST ENERGY CORPORATION ON BEHALF OF: THE CLEVELAND ELECTRIC ILLUMINATING COMPANY, OHIO EDISON COMPANY, PENNSYLVANIA POWER COMPANY, THE TOLEDO EDISON COMPANY AND VIRGINIA ELECTRIC AND POWER COMPANY

ER99–3144, 004, ALLIANCE COMPANIES, AMERICAN ELECTRIC POWER SERVICE CORPORATION ON BEHALF OF: APPALACHIAN POWER COMPANY, COLUMBUS SOUTHERN POWER COMPANY, INDIANA MICHIGAN POWER COMPANY, KENTUCKY POWER COMPANY, KINGSPORT POWER COMPANY, OHIO POWER COMPANY, WHEELING POWER COMPANY, CONSUMERS ENERGY COMPANY, THE DETROIT EDISON COMPANY, FIRST ENERGY CORPORATION ON BEHALF OF: THE CLEVELAND ELECTRIC ILLUMINATING COMPANY, OHIO EDISON COMPANY, PENNSYLVANIA POWER COMPANY, THE TOLEDO EDISON COMPANY AND VIRGINIA ELECTRIC AND POWER COMPANY

ER99–3144, 005, ALLIANCE COMPANIES, AMERICAN ELECTRIC POWER SERVICE CORPORATION ON BEHALF OF: APPALACHIAN POWER COMPANY, COLUMBUS SOUTHERN POWER COMPANY, INDIANA MICHIGAN POWER COMPANY, KENTUCKY POWER COMPANY, KINGSPORT POWER COMPANY, OHIO POWER COMPANY, WHEELING POWER COMPANY, CONSUMERS ENERGY COMPANY, THE DETROIT EDISON COMPANY, FIRST ENERGY CORPORATION ON BEHALF OF: THE CLEVELAND ELECTRIC ILLUMINATING COMPANY, OHIO EDISON COMPANY, PENNSYLVANIA POWER COMPANY, THE TOLEDO EDISON COMPANY AND VIRGINIA ELECTRIC AND POWER COMPANY

EC00–103, 000, CONSUMERS ENERGY COMPANY

ER00–2869, 000, CONSUMERS ENERGY COMPANY

CAE–28.

DOCKET# EG01–11, 000, MADISON WINDPOWER, LLC

CAE–29.

DOCKET# EL01–6, 000, QUIXX LINDEN, L.P.

OTHER#S QF98–3, 001, QUIXX LINDEN, L.P.

CAE–30.

DOCKET# EL01–8, 000, LG&E-WESTMORELAND HOPEWELL

OTHERιS QF88–85, 004, LG&E-WESTMORELAND HOPEWELL

CAE–31.

DOCKET# EL01–5, 000, SOWEGA POWER LLC

CAE–32.

DOCKET# EL99–42, 000, MONTAUP ELECTRIC COMPANY V. BOSTON EDISON COMPANY

OTHER#S EL99–42, 002, MONTAUP ELECTRIC COMPANY V. BOSTON EDISON COMPANY

ER00–2649, 000, MONTAUP ELECTRIC COMPANY V. BOSTON EDISON COMPANY

ER00–3749, 000, MONTAUP ELECTRIC COMPANY V. BOSTON EDISON COMPANY

CAE–33.

OMITTED

CAE–34.

DOCKET# ER01–204, 000, PJM INTERCONNECTION, L.L.C.

CAE–35.

DOCKET# EC00–141, 000, POTOMAC ELECTRIC POWER COMPANY, SOUTHERN ENERGY CHALK POINT, LLC, SOUTHERN ENERGY MID-ATLANTIC, LLC, SOUTHERN ENERGY PEAKER, LLC, SOUTHERN ENERGY POTOMAC RIVER, LLC, ALLEGHENY ENERGY SUPPLY COMPANY, LLC, PPL MONTOUR, LLC AND POTOMAC POWER RESOURCES, INC.

OTHER#S EL00–115, 000, POTOMAC ELECTRIC POWER COMPANY, SOUTHERN ENERGY CHALK POINT, LLC, SOUTHERN ENERGY MID-ATLANTIC, LLC, SOUTHERN ENERGY PEAKER, LLC, SOUTHERN ENERGY POTOMAC RIVER, LLC, ALLEGHENY ENERGY SUPPLY COMPANY, LLC, PPL MONTOUR, LLC AND POTOMAC POWER RESOURCES, INC.

ER00–3727, 000, POTOMAC ELECTRIC POWER COMPANY, SOUTHERN ENERGY CHALK POINT, LLC, SOUTHERN ENERGY MID-ATLANTIC, LLC, SOUTHERN ENERGY PEAKER, LLC, SOUTHERN ENERGY POTOMAC RIVER, LLC, ALLEGHENY ENERGY SUPPLY COMPANY, LLC, PPL MONTOUR, LLC AND POTOMAC POWER RESOURCES, INC.

Consent Agenda—Markets, Tariffs and Rates—Gas

CAG–1.

DOCKET# RP96–312, 034, TENNESSEE GAS PIPELINE COMPANY

OTHER#S GT01–5, 000, TENNESSEE GAS PIPELINE COMPANY

CAG–2.

DOCKET# RP01–81, 000, TENNESSEE GAS PIPELINE COMPANY

CAG–3.

DOCKET# RP00–212, 003, NUI CORPORATION (CITY GAS COMPANY OF FLORIDA DIVISION) V. FLORIDA GAS TRANSMISSION COMPANY

CAG–4.

DOCKET# RP01–99, 000, SOUTHERN NATURAL GAS COMPANY

CAG–5.

OMITTED

CAG–6.

DOCKET# RP01–111, 000, CHANDELEUR PIPE LINE COMPANY

CAG–7.

DOCKET# RP01–103, 000, NORTHWEST ALASKAN PIPELINE COMPANY

CAG–8.

DOCKET# RP01–74, 000, DOMINION TRANSMISSION, INC.

OTHER#S RP97–406, 024, DOMINION TRANSMISSION, INC.

RP97–406, 025, DOMINION TRANSMISSION, INC.

CAG–9.

DOCKET# IS01–33, 000, ALPINE TRANSPORTATION COMPANY

CAG–10.

DOCKET# RP99–322, 000, NORTHERN BORDER PIPELINE COMPANY

OTHER#S RP96–45, 000, NORTHERN BORDER PIPELINE COMPANY

RP96–45, 009, NORTHERN BORDER PIPELINE COMPANY

RP99–322, 003, NORTHERN BORDER PIPELINE COMPANY

CAG–11.
DOCKET# RP99–176, 010, NATURAL GAS PIPELINE COMPANY OF AMERICA
OTHER#S RP99–176, 007, NATURAL GAS PIPELINE COMPANY OF AMERICA
RP99–176, 008, NATURAL GAS PIPELINE COMPANY OF AMERICA
CAG–12.
DOCKET# RP00–257, 000, OZARK GAS TRANSMISSION, L.L.C.
OTHER#S RP00–257, 001, OZARK GAS TRANSMISSION, L.L.C.
CP01–21, 000, OZARK GAS TRANSMISSION, L.L.C.
CAG–13.
OMITTED
CAG–14.
DOCKET# RP00–363, 001, NATURAL GAS PIPELINE COMPANY OF AMERICA
OTHER#S RP00–363, 002, NATURAL GAS PIPELINE COMPANY OF AMERICA
CAG–15.
DOCKET# RP00–553, 001, TRANSCONTINENTAL GAS PIPE LINE CORPORATION
CAG–16.
DOCKET# RP01–83, 000, SEAGULL MARKETING SERVICES, INC. V. COLUMBIA GULF TRANSMISSION COMPANY
CAG–17.
DOCKET# RP96–129, 008, TRUNKLINE GAS COMPANY
CAG–18.
DOCKET# RP97–369, 014, PUBLIC SERVICE COMPANY OF COLORADO AND CHEYENNE LIGHT, FUEL AND POWER COMPANY
OTHER#S GP97–3, 004, AMOCO PRODUCTION COMPANY, ANADARKO PETROLEUM CORPORATION, MOBIL OIL CORPORATION, OXY USA, INC. AND UNION PACIFIC RESOURCES COMPANY
GP97–4, 004, KANSAS SMALL PRODUCER GROUP
GP97–5, 004, MESA OPERATING COMPANY
CAG–19.
OMITTED
CAG–20.
DOCKET# RM00–6, 001 WELL CATEGORY DETERMINATIONS
CAG–21.
OMITTED
CAG–22.
DOCKET# RP98–52, 039, WILLIAMS GAS PIPLINES CENTRAL, INC.
CAG–23.
DOCKET# MG00–6, 002, DOMINION RESOURCES, INC., CONSOLIDATED NATURAL GAS COMPANY AND DOMINION TRANSMISSION INC.
OTHER#S EC99–81, 003, DOMINION RESOURCES, INC., CONSOLIDATED NATURAL GAS COMPANY AND DOMINION TRANSMISSION INC.
EC99–81, 004, DOMINION RESOURCES, INC., CONSOLIDATED NATURAL GAS COMPANY AND DOMINION TRANSMISSION INC.
MG00–6, 003, DOMINION RESOURCES, INC., CONSOLIDATED NATURAL GAS COMPANY AND DOMINION TRANSMISSION INC.
MG00–6, 004, DOMINION RESOURCES, INC., CONSOLIDATED NATURAL GAS COMPANY AND DOMINION TRANSMISSION INC.
MT00–17, 000, DOMINION RESOURCES, INC., CONSOLIDATED NATURAL GAS COMPANY AND DOMINION TRANSMISSION INC.
CAG–24.
DOCKET# RP98–206, 006, ATLANTA GAS LIGHT COMPANY
OTHER#S RP98–206, 005, ATLANTA GAS LIGHT COMPANY
CAG–25.
DOCKET# RM00–11 000, FIVE-YEAR REVIEW OF OIL PIPELINE PRICING INDEX
CAG–26.
DOCKET# CP95–168, 004, SEA ROBIN PIPELINE COMPANY

Consent Agenda—Miscellaneous

CAM–1.
DOCKET# RM99–10, 000, REVISIONS TO AND ELECTRONIC FILING OF THE FERC FORM NO. 6, AND RELATED UNIFORM SYSTEMS OF ACCOUNTS

Consent Agenda—Energy Projects—Hydro

CAH–1.
DOCKET# UL96–1, 003, BLACKSTONE MILL DEPOT STREET TRUST
CAH–2.
DOCKET# P–1980, 009, WISCONSIN ELECTRIC POWER COMPANY
CAH–3.
DOCKET# P–2074, 007, WISCONSIN ELECTRIC POWER COMPANY
CAH–4.
DOCKET# P–2073, 008, WISCONSIN ELECTRIC POWER COMPANY
CAH–5.
DOCKET# P–1759, 036, WISCONSIN ELECTRIC POWER COMPANY
OTHER#S P–1980, 009, WISCONSIN ELECTRIC POWER COMPANY
P–2072, 008, WISCONSIN ELECTRIC POWER COMPANY
P–2073, 008, WISCONSIN ELECTRIC POWER COMPANY
P–2074, 007, WISCONSIN ELECTRIC POWER COMPANY
P–2131, 020, WISCONSIN ELECTRIC POWER COMPANY
P–2471, 005, WISCONSIN ELECTRIC POWER COMPANY
P–11831, 000, WISCONSIN ELECTRIC POWER COMPANY
P–11830, 000, WISCONSIN ELECTRIC POWER COMPANY
CAH–6.
DOCKET# P–2131, 020, WISCONSIN ELECTRIC POWER COMPANY
CAH–7.
DOCKET# P–11830, 000, WISCONSIN ELECTRIC POWER COMPANY
CAH–8.
DOCKET# P–11831, 000, WISCONSIN ELECTRIC POWER COMPANY
CAH–9.
DOCKET# P–2471, 005, WISCONSIN ELECTRIC POWER COMPANY
CAH–10.
DOCKET# P–2072, 008, WISCONSIN ELECTRIC POWER COMPANY

Consent Agenda—Energy Projects—Certificates

CAC–1.
DOCKET# CP00–68, 000, QUESTAR PIPELINE COMPANY
CAC–2.
DOCKET# CP98–540, 003, TRANSCONTINENTAL GAS PIPE LINE CORPORATION
CAC–3.
DOCKET# CP00–416, 000, COLUMBIA GAS TRANSMISSION CORPORATION
OTHER#S CP00–417, 000, COLUMBIA NATURAL RESOURCES, INC.
CAC–4.
DOCKET# CP98–74, 003, ANR PIPELINE COMPANY V. TRANSCONTINENTAL GAS PIPE LINE CORPORATION
CAC–5.
DOCKET# CP00–424, 001, DISTRIGAS OF MASSACHUSETTS LLC
CAC–6.
DOCKET# CP99–600, 000, NATIONAL FUEL GAS DISTRIBUTION CORPORATION
CAC–7.
DOCKET# CP95–218, 002, TEXAS EASTERN TRANSMISSION CORPORATION
CAC–8.
DOCKET# RM99–5, 002, REGULATIONS UNDER THE OUTER CONTINENTAL SHELF LANDS ACT GOVERNING THE MOVEMENT OF NATURAL GAS ON FACILITIES ON THE OUTER CONTINENTAL SHELF

Energy Projects—Hydro Agenda

H–1.
RESERVED

Energy Projects—Certificates Agenda

C–1.
RESERVED

Markets, Tariffs and Rates—Electric Agenda

E–1.
OMITTED
E–2.
DOCKET# EL00–95, 000, SAN DIEGO GAS & ELECTRIC COMPANY V. SELLERS OF ENERGY AND ANCILLARY SERVICES INTO MARKETS OPERATED BY THE CALIFORNIA INDEPENDENT SYSTEM OPERATOR AND THE CALIFORNIA POWER EXCHANGE
OTHER#S EL00–95, 002, SAN DIEGO GAS & ELECTRIC COMPANY V. SELLERS OF ENERGY AND ANCILLARY SERVICES INTO MARKETS OPERATED BY THE CALIFORNIA INDEPENDENT SYSTEM OPERATOR AND THE CALIFORNIA POWER EXCHANGE
EL00–95, 003, SAN DIEGO GAS & ELECTRIC COMPANY V. SELLERS OF ENERGY AND ANCILLARY SERVICES INTO MARKETS OPERATED BY THE CALIFORNIA INDEPENDENT SYSTEM OPERATOR AND THE CALIFORNIA POWER EXCHANGE
EL00–98, 000, INVESTIGATION OF PRACTICES OF THE CALIFORNIA INDEPENDENT SYSTEM OPERATOR AND THE CALIFORNIA POWER EXCHANGE EL00–98, 002, INVESTIGATION OF PRACTICES OF THE CALIFORNIA INDEPENDENT SYSTEM OPERATOR AND THE CALIFORNIA POWER EXCHANGE

EL00–98, 003, INVESTIGATION OF PRACTICES OF THE CALIFORNIA INDEPENDENT SYSTEM OPERATOR AND THE CALIFORNIA POWER EXCHANGE

EL00–107, 000 PUBLIC MEETING IN SAN DIEGO, CALIFORNIA EL00–97, 000 RELIANT ENERGY POWER GENERATION, INC., DYNEGY POWER MARKETING, INC. AND SOUTHERN ENERGY CALIFORNIA, L.L.C. V. CALIFORNIA INDEPENDENT SYSTEM OPERATOR CORPORATION

EL00–104, 000, CALIFORNIA ELECTRICTY OVERSIGHT BOARD V. ALL SELLERS OF ENERGY AND ANCILLARY SERVICES INTO THE ENERGY AND ANCILLARY SERVICES MARKETS OPERATED BY THE CALIFORNIA INDEPENDENT SYSTEM OPERATOR AND THE CALIFORNIA POWER EXCHANGE

EL01–1, 000, CALIFORNIA MUNICIPAL UTILITIES ASSOCIATION V. ALL JURISDICTIONAL SELLERS OF ENERGY AND ANCILLARY SERVICES INTO MARKETS OPERATED BY THE CALIFORNIA INDEPENDENT SYSTEM OPERATOR AND THE CALIFORNIA POWER EXCHANGE

EL01–2, 000, CALIFORNIANS FOR RENEWABLE ENERGY, INC. V. INDEPENDENT ENERGY PRODUCERS, INC., AND ALL SELLERS OF ENERGY AND ANCILLARY SERVICES INTO MARKETS OPERATED BY THE CALIFORNIA INDEPENDENT SYSTEM OPERATOR AND THE CALIFORNIA POWER EXCHANGE; ALL SCHEDULING COORDINATORS ACTING ON BEHALF OF THE ABOVE SELLERS; CALIFORNIA INDEPENDENT SYSTEM OPERATOR CORPORATION; AND CALIFORNIA POWER EXCHANGE CORPORATION

EL01–10, 000, PUGET SOUND ENERGY, INC. V. ALL JURISDICTIONAL SELLERS OF ENERGY AND/OR CAPACITY AT WHOLESALE INTO ELECTRIC ENERGY AND/OR CAPACITY MARKETS IN THE PACIFIC NORTHWEST, INCLUDING PARTIES TO THE WESTERN SYSTEMS POWER POOL AGREEMENT

Order on wholesale electric markets. this order may be considered at the December 13, 2000 meeting or, subject to further notice, at another date later this month.

Markets, Tariffs and Rates—Gas Agenda

G–1.

RESERVED

David P. Boergers

Secretary.

[FR Doc. 00–31533 Filed 12–7–00; 10:47 am]

BILLING CODE 6717–01–U

DEPARTMENT OF ENERGY

Western Area Power Administration

Formula Rates for the Central Arizona Project 115-kV/230-kV Transmission System—Rate Order No. WAPA–88

AGENCY: Western Area Power Administration, DOE.

ACTION: Notice of rate order.

SUMMARY: Notice is given of the confirmation and approval by the Deputy Secretary of the Department of Energy (DOE) of Rate Order No. WAPA–88 and Rate Schedules CAP–FT1, CAP–NFT1, and CAP–NITS1 placing Formula Rates for firm point-to-point transmission service, nonfirm point-to-point transmission service, and Network Integration Transmission Service (NITS) on the Central Arizona Project (CAP) 115-kV/230-kV transmission system of the Western Area Power Administration (Western) into effect on an interim basis. The Formula Rates will remain in effect on an interim basis until the Federal Energy Regulatory Commission (FERC) confirms, approves, and places them into effect on a final basis or until they are replaced by other rates. The Formula Rates will provide sufficient revenue to pay all annual costs, including interest expense, and repayment of required investment within the allowable period.

DATES: The Formula Rates will be placed into effect on an interim basis on January 1, 2001, and will be in effect until FERC confirms, approves, and places the Formula Rates in effect on a final basis for a 5-year period ending December 31, 2005, or until superseded.

FOR FURTHER INFORMATION CONTACT: Mr. Maher Nasir, Rates Team Lead, Desert Southwest Customer Service Region, Western Area Power Administration, P.O. Box 6457, Phoenix, AZ 85005–6457, telephone (602) 352–2768, or by e-mail: nasir@wapa.gov.

SUPPLEMENTARY INFORMATION: The CAP 115-kV/230–kV transmission system has been used primarily to provide power to the CAP water pumps. The planned construction of a number of independent powerplants in Arizona and Nevada creates a potential demand for use of surplus transmission capacity on the CAP 115-kV/230-kV transmission system.

The proposed Formula Rates for point-to-point transmission service and NITS on the CAP 115-kV/230-kV transmission system are based on a revenue requirement that recovers costs for facilities associated with providing transmission service and the non-facilities costs allocated to transmission service. The rates for point-to-point transmission service on the CAP 115-kV/230-kV transmission system are determined by combining the average annual amortization costs with the average annual operations and maintenance costs, and dividing them by the average annual contract rate of delivery for the cost evaluation period FY 2001–FY 2005. Implementing the proposed Formula Rates results in a firm point-to-point CAP 115-kV/230-kV transmission system rate of $9.83 per kilowattyear and a nonfirm point-to-point CAP 115-kV/230-kV transmission system rate of 1.12 mills/kWh.

NITS allows a transmission customer to integrate, plan, economically dispatch, and regulate its network resources to serve its native load in a way comparable to that used by the transmission provider to service its native load customers. The monthly charge methodology for NITS on the CAP 115-kV/230-kV transmission system is the product of the transmission customer's load-ratio share times one-twelfth of the annual transmission revenue requirement. The customer's load-ratio share is calculated on a rolling 12-month basis (12CP). The customer's load-ratio share is equal to that customers' hourly load coincident with the CAP 115-kV/230-kV transmission system monthly transmission system peak divided by the resultant value of the CAP 115-kV/230-kV transmission system's monthly transmission system peak minus the CAP 115-kV/230-kV transmission system's coincident peak for all firm point-to-point transmission service plus the CAP 115-kV/230-kV transmission system's firm point-to-point transmission service reservations.

The Formula Rates for transmission service on the CAP 115-kV/230-kV transmission system are being developed pursuant to the Department of Energy Organization Act (42 U.S.C. 7101–7352), through which the power marketing functions of the Secretary of the Interior and the Bureau of Reclamation under the Reclamation Act of 1902 (ch. 1093, 32 Stat. 388), as amended and supplemented by subsequent enactments, particularly section 9(c) of the Reclamation Project Act of 1939 (43 U.S.C. 485h(c)), and other acts specifically applicable to the project involved, were transferred to and vested in the Secretary of Energy.

By Amendment No. 3 to Delegation Order No. 0204–108, published November 10, 1993 (58 FR 59716), the Secretary of Energy delegated (1) the authority to develop long-term power and transmission rates on a nonexclusive basis to Western's Administrator; and (2) the authority to

confirm, approve, and place into effect on a final basis, to remand, or to disapprove such rates to the FERC. In Delegation Order No. 0204–172, effective November 24, 1999, the Secretary of Energy delegated the authority to confirm, approve, and place such rates into effect on an interim basis to the Deputy Secretary.

Existing Department of Energy procedures for public participation in power and transmission rate adjustments are located at 10 CFR part 903, effective on September 18, 1985 (50 FR 37835), and have been followed by Western in the development of these provisional rates.

Rate Order No. WAPA–88, confirming, approving, and placing the proposed CAP 115-kV/230-kV transmission system Formula Rates into effect on an interim basis, is issued; and the new Rate Schedules CAP–FT1, CAP–NFT1, and CAP–NITS1 will be submitted promptly to FERC for confirmation and approval on a final basis.

Dated: November 30, 2000.

T.J. Glauthier,

Deputy Secretary.

Order Confirming, Approving, and Placing the Central Arizona Project Transmission System Formula Rates into Effect on an Interim Basis

These Formula Rates are developed pursuant to the Department of Energy Organization Act (42 U.S.C. 7101–7352), through which the power marketing functions of the Secretary of the Interior and the Bureau of Reclamation under the Reclamation Act of 1902 (ch. 1093, 32 Stat. 388), as amended and supplemented by subsequent enactments, particularly section 9(c) of the Reclamation Project Act of 1939 (43 U.S.C. 485h(c)), and other acts specifically applicable to the project involved, were transferred to and vested in the Secretary of Energy.

By Amendment No. 3 to Delegation Order No. 0204–108, published November 10, 1993 (58 FR 59716), the Secretary of Energy delegated (1) the authority to develop long-term power and transmission rates on a nonexclusive basis to the Administrator of the Western Area Power Administration (Western); and (2) the authority to confirm, approve, and place into effect on a final basis, to remand, or to disapprove such rates to the Federal Energy Regulatory Commission (FERC). In Delegation Order No. 0204–172, effective November 24, 1999, the Secretary of Energy delegated the authority to confirm, approve, and place such rates into effect on an interim basis to the Deputy Secretary. Existing Department of Energy (DOE) procedures for public participation in power rate adjustments are found in 10 CFR part 903. Procedures for approving Power Marketing Administration rates by FERC are found in 18 CFR part 300.

Acronyms and Definitions

As used in this rate order, the following acronyms and definitions apply:

Administrator: The Administrator of the Western Area Power Administration (Western).

Capacity: The rated continuous electric load-carrying capability of a generator, transformer, transmission circuit, or other equipment. It is expressed in kW.

Central Arizona Project (CAP): One of three related water development projects that make up the Colorado River Basin Project.

Customer: An entity with a contract and receiving service from Western's Desert Southwest Region or from CAP.

DOE: United States Department of Energy.

DOE Order RA 6120.2: An order dealing with power marketing administration financial reporting and rate-making procedures.

Energy: Measured in terms of the work it is capable of doing over a period of time. It is expressed in kWh.

FERC: Federal Energy Regulatory Commission.

Firm: A type of product and/or service that is available at the time requested by the customer.

Formula Rates: A rate which is based upon a formula calculated yearly.

FY: Fiscal year; October 1 to September 30.

kV: Kilovolt—the electrical unit of measure of electric potential that equals 1,000 volts.

kW: Kilowatt—the electrical unit of capacity that equals 1,000 watts.

kWmonth: Kilowattmonth—the electrical unit of the monthly amount of capacity.

kWh: Kilowatthour—the electrical unit of energy that equals 1,000 watts in 1 hour.

Mill: A monetary denomination of the United States that equals one tenth of a cent or one thousandth of a dollar.

NEPA: National Environmental Policy Act of 1969 (42 U.S.C. 4321, *et seq.*).

Nonfirm: A type of product and/or service that is not always available at the time requested by the customer.

O&M: Operation and maintenance.

Power: Capacity and energy.

Reclamation: United States Department of the Interior, Bureau of Reclamation.

Revenue Requirement: The revenue required to recover O&M expenses, transmission service expenses, interest, deferred expenses, and repayment of Federal investments, or other assigned costs.

Effective Date

The new rates will become effective on an interim basis on the first day of the first full billing period beginning on or after January 1, 2001, and will be in effect pending FERC's approval of them or substitute rates on a final basis for a 5-year period ending December 31, 2005, or until superseded.

Public Notice and Comment

Existing Department of Energy procedures for public participation in power and transmission rate adjustments, 10 CFR part 903, have been followed by Western in the development of these rates. The following summarizes the steps Western took to ensure involvement of interested parties in the rate process:

1. The proposed rate adjustment was initiated on May 23, 2000, when a letter announcing the first informal customer information forum was mailed to all Central Arizona Project (CAP) customers and interested parties. The first informal customer information forum was held on June 7, 2000, at the Desert Southwest Customer Service Regional office (DSW) in Phoenix, Arizona. At the informal customer information forum, Western and Reclamation staff explained the rationale for the rate adjustment, presented rate designs and methodologies, and answered questions.

2. A **Federal Register** notice was published on May 24, 2000 (65 FR 33541), officially announcing the proposed rates for the CAP 115-kV/230-kV transmission system, initiating the public consultation and comment period, and announcing the public information and public comment forums.

3. On June 7, 2000, a brochure prepared by Western's DSW office was provided to all CAP firm transmission customers and interested parties, included in the **Federal Register** notice of May 24, 2000, and announced the times and locations for the two public forums.

4. On June 16, 2000, beginning at 10 a.m. MST, the public information forum was held at Western's DSW office in Phoenix, Arizona. At the public information forum, Western provided detailed explanations of the proposed Formula Rates for the CAP 115-kV/230-kV transmission system and provided a list of issues that could change the proposed rates, and answered questions.

Notice was given that additional information would be provided at the public comment forum. An information handout was provided at the forum.

5. On July 17, 2000, beginning at 10 a.m., the public comment forum was held at Western's DSW office in Phoenix, Arizona. At the start of the forum, Western gave the public an opportunity to comment for the record. Three customer representatives were present and declined to make oral comments.

6. Two comment letters were received during the consultation and comment period. The consultation and comment period ended August 22, 2000. All formally submitted comments have been considered in the preparation of this rate order.

Project Description

The CAP is one of three related water development projects that make up the Colorado River Basin Project. The others are the Dixie and the Upper Basin projects. The CAP was developed for Arizona and western New Mexico; the Dixie Project for southeastern Utah; and the Upper Basin Project for Colorado and New Mexico.

Congress authorized the project in 1968 to improve water resources in the Colorado River Basin. Segments of the 1968 authorization allowed Federal participation in the Navajo Generating Station, which has three coal-fired steam electric generating units for a combined capacity of 2,250 MW. Construction of the plant, located near Lake Powell at Page, Ariz., began in 1970. Navajo began generating in 1976.

The Federal share of 24.3 percent, or 546,750 kW, is used to power the pumps that move Colorado River water through CAP canals. Surplus generation is currently marketed under the Navajo Power Marketing Plan adopted on Dec. 1, 1987.

Revenue Requirement

The Revenue Requirement will be calculated each fiscal year to determine if transmission revenues will be sufficient to pay, within the prescribed time periods, all costs assigned to the CAP 115-kV/230-kV transmission system function. Repayment criteria is based on law, policies, and authorizing legislation, including DOE Order RA 6120.2.

Certification of Rate

Western's Administrator has certified that the Formula Rates for transmission service on the CAP 115-kV/230-kV transmission system, placed into effect on an interim basis herein, are the lowest possible rates consistent with sound business principles, and have been developed in accordance with administrative policies and applicable laws.

Discussion

The CAP 115-kV/230-kV transmission system has been used primarily to provide power to the CAP water pumps. The planned construction of a number of independent powerplants in Arizona and Nevada creates a potential demand for use of surplus transmission capacity on the CAP 115-kV/230-kV transmission system.

The proposed Formula Rates for point-to-point transmission service and NITS on the CAP 115-kV/230-kV transmission system are based on a Revenue Requirement that recovers costs for facilities associated with providing transmission service and for non-facilities allocated to transmission service.

Point-to-Point Transmission Service

The rate for firm point-to-point transmission service on the CAP 115-kV/230-kV transmission system is determined by combining the annual amortization costs with the annual operations and maintenance costs, and dividing them by the annual average contract rate of delivery. The nonfirm rate is determined by converting the firm annual rate into an hourly rate. Implementing the proposed rate formulas results in a firm point-to-point CAP 115-kV/230-kV transmission system rate of $9.83 per kilowattyear and a nonfirm point-to-point CAP 115-kV/230-kV transmission system rate of 1.12 mills/kWh.

Network Integration Transmission Service

NITS allows a transmission customer to integrate, plan, economically dispatch, and regulate its network resources to serve its native load in a way comparable to how a transmission provider uses its own transmission system to service its native load customers. The monthly charge methodology for NITS on the CAP 115-kV/230-kV transmission system is the product of the transmission customer's load-ratio share times one-twelfth of the annual transmission revenue requirement. The customer's load-ratio share is calculated on a rolling 12-month basis (12CP). The customer's load-ratio share is equal to that customers' hourly load coincident with the CAP 115-kV/230-kV transmission system's monthly transmission system peak divided by the resultant value of the CAP 115-kV/230-kV transmission system's monthly transmission system peak minus the CAP 115-kV/230-kV transmission system coincident peak for all firm point-to-point transmission service plus the CAP 115-kV/230-kV transmission system's firm point-to-point transmission service reservations. In order to ensure the collection of the transmission system's annual revenue requirement, the difference between the first two components of the resultant value outlined above constitutes the network transmission systems' monthly peak and is anticipated to be metered. Thus, a NITS customer, based on its 12-CP load, will pay its proportionate share of the revenue requirement for the month. Since point-to-point transmission service customers are charged on a reservation basis and not a usage basis, for the purpose of determining the NITS charge, the transmission system's monthly peak will coincide with the network transmission system's monthly peak.

Ancillary Service

The proposed revenue requirement includes the costs for scheduling, system control, and dispatch service. The reactive supply and voltage control ancillary service must be purchased from the Western Area Lower Colorado (WALC) control area. The transmission customer may self-supply the four remaining ancillary services or request them from WALC. These four ancillary services are regulation and frequency response service, energy imbalance service, spinning reserve service, and supplemental reserve service.

Statement of Revenue and Related Expenses

The following table provides a summary of revenues and expenses for the 5-year provisional rate period.

REVENUES AND EXPENSES

[In thousands of dollars]

	Formula rates [1]
Total Revenues	34,429
Revenue Distribution:	
O&M	6,763
Purchase Power	0
Transmission	0
Interest	19,343
Other	0
Investment Repayment	8,323
Capitalized Expenses	0
Prior-Year Adjustment	0

[1] The revenues and expenses for the Formula Rates are for 5 years.

Basis for Rate Development

This proposed rate adjustment is needed to put into place, for the first

time, rate formulas to calculate the rate to be charged for the sale of surplus transmission capacity on the CAP 115-kV/230-kV transmission system. The assessed calculated rates will provide sufficient revenue to pay all annual costs, including interest expense, and repayment of required investment within the allowable period. The Formula Rates are scheduled to go in effect on January 1, 2001, and will remain in effect through December 31, 2005.

Comments

During the public consultation and comment period, Western received two written comment letters on the rate adjustment. All comments received by the end of the public consultation and comment period, August 22, 2000, were reviewed and considered in the preparation of this rate order.

Written comments were received from the following sources: Central Arizona Project, August 21, 2000, Robert S. Lynch, Attorney at Law, August 22, 2000.

The comments received dealt with the disposition of revenues derived from the assessment of the CAP 115-kV/230-kV transmission system rates and its applicability to the Lower Colorado River Basin Development Fund (LCRBDF). All comments supported Western's efforts to establish the new CAP 115-kV/230-kV transmission system rates. The following is a summary of the comments received by the end of the consultation and comment period and Western's response to those comments.

Comment: Both commentors stated that there are significant unresolved issues regarding the disposition of any revenues received from Western's marketing of CAP transmission service, and that any revenues received should be applied in the following manner. The annual amortization cost component of the CAP rate should be deposited in the LCRBF and applied to the CAP capital investment, however, revenues derived from the operation and maintenance cost component of the CAP transmission rate should be used to offset amounts otherwise due from the Central Arizona Water Conservation District (CAWCD).

Response: Western agrees in concept with the commentors and upon approval of the provisional rates Western will evaluate its authority and ability to disburse revenues in the manner similar to that suggested by the commentor. Western will not double collect its operation and maintenance cost component through rates and through CAWCD trust funds.

Environmental Compliance

In compliance with the National Environmental Policy Act of 1969 (NEPA) (42 U.S.C. 4321, *et seq.*); Council on Environmental Quality Regulations (40 CFR parts 1500–1508); and DOE NEPA Regulations (10 CFR part 1021), Western has determined that this action is categorically excluded from the preparation of an environmental assessment or an environmental impact statement.

Determination Under Executive Order 12866

Western has an exemption from centralized regulatory review under Executive Order 12866; accordingly, no clearance of this notice by the Office of Management and Budget is required.

Regulatory Flexibility Analysis

The Regulatory Flexibility Act of 1980 (5 U.S.C. 601–612, *et seq.*) requires Federal agencies to perform a regulatory flexibility analysis if a final rule is likely to have a significant economic impact on a substantial number of small entities and there is a legal requirement to issue a general notice of proposed rulemaking. Western has determined that this action does not require a regulatory flexibility analysis since it is a rulemaking of particular applicability involving rates or services applicable to public property.

Small Business Regulatory Enforcement Fairness Act

Western has determined that this rule is exempt from congressional notification requirements under 5 U.S.C. 801 because the action is a rulemaking of particular applicability relating to rates or services and involves matters of procedure.

Availability of Information

Information regarding this rate adjustment, including the repayment studies, comments, letters, memorandums, and other supporting material made or kept by Western for the purpose of developing the Formula Rates, is available for public review in the Office of the Power Marketing Manager, Desert Southwest Customer Service Regional Office, Western Area Power Administration, 615 South 43rd Avenue, Phoenix, Arizona.

Submission to the Federal Energy Regulatory Commission

The Formula Rates herein confirmed, approved, and placed into effect on an interim basis, together with supporting documents, will be submitted to FERC for confirmation and approval on a final basis.

Order

In view of the foregoing and pursuant to the authority delegated to me by the Secretary of Energy, I confirm and approve on an interim basis, effective January 1, 2001, Formula Rates under Rate Schedules CAP–NFT1, CAP–NFT1, and CAP–NITS1 for the Central Arizona Project 115-kV/230-kV transmission system of the Western Area Power Administration. The Formula Rates under the rate schedules shall remain in effect on an interim basis, pending FERC confirmation and approval of them or substitute rates on a final basis through December 31, 2005.

Dated: November 30, 2000.

T.J. Glauthier,
Deputy Secretary.

Central Arizona Project

Schedule of Rate(s) for Firm Point-to-Point Cap 115-kV/230-kV Transmission Service

[Rate Schedule CAP–FT1]

Effective: The first day of the first full billing period beginning on or after January 1, 2001, through December 31, 2005.

Available: In the marketing area served by the Central Arizona Project (CAP) 115-kV/230-kV transmission system.

Applicable: The transmission service customers shall compensate the CAP where firm capacity and energy are supplied to the CAP 115-kV/230-kV transmission system at points of interconnection with other systems and transmitted and delivered, less losses, to points of delivery on the CAP 115-kV/230-kV system specified in the service contract. The formula for the annual revenue requirement used to calculate the charges for this firm service under this schedule was promulgated and may be modified pursuant to applicable Federal laws, regulations, and policies. The Desert Southwest Customer Service Region (DSW) may modify the charges for firm point-to-point transmission service upon written notice to the transmission customer. Any change to the charges to the transmission customer for firm point-to-point transmission, shall be as set forth in a revision to this rate schedule promulgated pursuant to applicable Federal laws, regulations, and policies and made part of the applicable service contract. DSW shall charge the transmission customer in accordance with the revenue requirements then in effect.

Character and Conditions of Service: Alternating current at 60 Hertz, three-phase, delivered and metered at the

voltages and points of delivery established by contract over the CAP 115-kV/230-kV transmission system.

Formula Rate For Firm Point-to-Point Transmission Service:

Annual Rate = Five Year Average Annual Revenue Requirement divided by the Five Year Average Contract Rate of Delivery, rounded to the penny.

Monthly Rate = Annual Rate divided by 12, rounded to the penny.

Calculated Rates: For FY 2001, the annual firm rate calculates to $9.83 per kWyear, and the monthly firm rate calculates to $0.82 per kWmonth. Based on updated financial and load data, recalculated rates will go into effect on January 1 of each year during the effective rate schedule period.

Adjustments

For Reactive Power: There shall be no entitlement to transfer of reactive kilovoltamperes at delivery points, except when such transfers may be mutually agreed upon by contractor and contracting officer or their authorized representatives.

For Losses: Capacity and energy losses incurred in connection with the transmission and delivery of capacity and energy under this rate schedule shall be supplied by the customer in accordance with the service contract.

Billing for Unauthorized Overruns: For each billing period in which there is a contract violation involving an unauthorized overrun of the contractual firm transmission obligations, such overrun shall be billed at 10 times the above rates.

Central Arizona Project

Schedule of Rate(s) for Nonfirm Point-to-Point Cap 115-kV/230-kV Transmission Service

[Rate Schedule CAP–FT1]

Effective: The first day of the first full billing period beginning on or after January 1, 2001, through December 31, 2005.

Available: In the marketing area served by the Central Arizona Project 115-kV/230-kV transmission system.

Applicable: The transmission service customer shall compensate the Central Arizona Project (CAP) for nonfirm point-to-point transmission service where capacity and energy are supplied to the CAP 115-kV/230-kV transmission system at points of interconnection with other systems, transmitted subject to the availability of the transmission capacity, and delivered less losses, to points of delivery on the CAP 115-kV/230-kV system specified in the service contract.

Character and Conditions of Service: Alternating current at 60 Hertz, three-phase, delivered and metered at the voltages and points of delivery established by contract over the CAP 115-kV/230-kV transmission system.

Formula Rate for Nonfirm Point-to-Point Transmission Service: Nonfirm Point-To-Point Transmission Service Rate: Each Contractor shall be billed monthly a mills per kilowatthour rate of scheduled or delivered kilowatthours at point of delivery, established by contract, payable monthly. This rate is equal to the CAP 115-kV/230-kV Firm Transmission dollar per kilowatt-year rate then in effect divided by 8,760, multiplied by 1,000, rounded to two decimal places.

Calculated Rate: For FY 2001, the nonfirm rate calculates to 1.12 mills/kWh. Based on updated financial and load data, a recalcualted rate will go into effect on January 1 of each year during the effective rate schedule period.

Adjustments

For Reactive Power: There shall be no entitlement to transfer of reactive kilovoltamperes at delivery points, except when such transfers may be mutually agreed upon by contractor and contracting officer or their authorized representatives.

For Losses: Capacity and energy losses incurred in connection with the transmission and delivery of capacity and energy under this rate schedule shall be supplied by the customer in accordance with the service contract.

Central Arizona Project

Schedule of Rate(s) for Network Integration Transmission Service

[Rate Schedule CAP–NITS1

Effective: The first day of the first full billing period beginning on or after January 1, 2001, through December 31, 2005.

Applicable: The transmission customer shall compensate the Central Arizona Project (CAP) each month for Network Integration Transmission Service (NITS) pursuant to the applicable Network Integration Transmission Service Agreement and annual revenue requirement referred to below. The formula for the annual revenue requirement used to calculate the charges for this service under this schedule was promulgated and may be modified pursuant to applicable Federal laws, regulations, and policies.

The Desert Southwest Customer Service Region (DSW) may modify the charges for NITS upon written notice to the transmission customer. Any change to the charges to the transmission customer for NITS shall be as set forth in a revision to this rate schedule promulgated pursuant to applicable Federal laws, regulations, and policies and made part of the applicable service agreement. DSW shall charge the transmission customer in accordance with the revenue requirement then in effect.

Formula Rate:

Monthly Charge = Transmission Customer's Load-Ratio Share × (Revenue Requirement/12)

Calculated Rate: The projected annual revenue requirement for FY 2001 for the CAP 115-kV/230-kV transmission system is $6,556,547. Based on updated financial and load data, a recalculated revenue requirement will go into effect on January 1 of each year during the effective rate schedule period.

[FR Doc. 00–31442 Filed 12–8–00; 8:45 am]

BILLING CODE 6450–01–P

DEPARTMENT OF ENERGY

Western Area Power Administration

Proposed Salt Lake City Area Integrated Projects Firm Power Rate Formula Adder

AGENCY: Western Area Power Administration, DOE.

ACTION: Notice of extension of comment and consultation period.

SUMMARY: The Western Area Power Administration's (Western) Colorado River Storage Project (CRSP) Management Center (MC) published a Notice of Proposed Salt Lake City Area Integrated Projects (SLCA/IP) Firm Power Rate Formula Adder in the **Federal Register** (65 FR 66995) on November 8, 2000. This notice extends the comment and consultation period by 3 weeks. The MC plans to have the rate formula adder become effective March 1, 2001, instead of February 1, 2001, as was previously stated in the **Federal Register**, dated November 8, 2000.

DATES: The consultation and comment period will end on December 29, 2000.

ADDRESSES: Written comments may be sent to: Mr. Dave Sabo, CRSP Manager, CRSP Management Center, Western Area Power Administration, P.O. Box 11606, Salt Lake City, UT 84147–0606, e-mail *sabo@wapa.gov*. Western must receive written comments by the end of the consultation and comment period to assure consideration.

FOR FURTHER INFORMATION CONTACT: Ms. Carol Loftin, Rates Manager, CRSP

Management Center, Western Area Power Administration, P.O. Box 11606, Salt Lake City, UT 84147–0606, telephone (801) 524–6380, e-mail *loftinc@wapa.gov,* or visit CRSP MC's home page at: *www.wapa.gov/crsp/crsp.htm.*

Procedural Requirements

Since the proposed rate formula adder constitutes a major rate adjustment as defined at 10 CFR 903.2, both public information forums and public comment forums have been held. However, the consultation and comment period has been shortened because of the financial hardship faced by the CRSP Basin Fund. After reviewing public comments, Western will recommend that the proposed rate formula adder or a revised proposed rate formula adder be approved on an interim basis by the DOE Deputy Secretary.

The proposed rate formula adder to the SLCA/IP firm power rates is being established pursuant to the Department of Energy Organization Act, 42 U.S.C. 7101–7352; the Reclamation Act of 1902, ch. 1093, 32 Stat. 388, as amended and supplemented by subsequent enactments, particularly section 9(c) of the Reclamation Project Act of 1939, 43 U.S.C. 485h(c); and other acts specifically applicable to the projects involved.

By Amendment No. 3 to Delegation Order No. 0204–108, published November 10, 1993 (58 FR 59716), the Secretary of DOE delegated (1) the authority to develop long-term power and transmission rates on a nonexclusive basis to the Administrator of Western; and (2) the authority to confirm, approve, and place into effect on a final basis, to remand, or to disapprove such rates to FERC. In Delegation Order No. 0204–172, effective November 24, 1999, the Secretary of Energy delegated the authority to confirm, approve, and place such rates into effect on an interim basis to the Deputy Secretary. Existing DOE procedures for public participation in power rate adjustments are found at 10 CFR part 903.

Availability of Information

All studies, comments, letters, memorandums, or other documents made or kept by Western for developing the proposed rates are and will be made available for inspection and copying at the CRSP Management Center, located at 150 East Social Hall Avenue, Suite 300, Salt Lake City, UT 84111–1534.

Regulatory Procedural Requirements

Regulatory Flexibility Analysis

The Regulatory Flexibility Act of 1980 (5 U.S.C. 601, *et seq.*) requires Federal agencies to perform a regulatory flexibility analysis if a final rule is likely to have a significant economic impact on a substantial number of small entities and there is a legal requirement to issue a general notice of proposed rulemaking. Western has determined that this action does not require a regulatory flexibility analysis since it is a rulemaking of particular applicability involving rates or services applicable to public property.

Environmental Compliance

In compliance with the National Environmental Policy Act of 1969 (NEPA) (42 U.S.C. 4321, *et seq.*); Council on Environmental Quality Regulations (40 CFR parts 1500–1508); and DOE NEPA Regulations (10 CFR part 1021), Western determined that this action is categorically excluded from the preparation of an environmental assessment or an environmental impact statement.

Determination Under Executive Order 12866

Western has an exemption from centralized regulatory review under Executive Order 12866; accordingly, no clearance of this notice by the Office of Management and Budget is required.

Small Business Regulatory Enforcement Fairness Act

Western has determined that this rule is exempt from Congressional notification requirements under 5 U.S.C. 801 because the action is a rulemaking of particular applicability relating to rates or services and involves matters of procedure.

Dated: November 27, 2000.

Michael S. Hacskaylo,

Administrator.

[FR Doc. 00–31441 Filed 12–8–00; 8:45 am]

BILLING CODE 6450–01–P

ENVIRONMENTAL PROTECTION AGENCY

[FRL–6915–2]

Agency Information Collection Activities: Proposed Collection; Comment Request; Emission Certification and Participation in AB&T for Nonroad CI Engines and Nonroad SI Engines at or Below 19 kW

AGENCY: Environmental Protection Agency (EPA).

ACTION: Notice.

SUMMARY: In compliance with the Paperwork Reduction Act (44 U.S.C. 3501 *et seq.*), this document announces that EPA is planning to submit the following continuing Information Collection Requests (ICR) to the Office of Management and Budget (OMB): Non-road Compression-ignition Engine and On-road Heavy Duty Engine Application for Emission Certification, and Participation in the Averaging, Banking, and Trading Program, EPA ICR Number 1851.03, OMB Control Number 2060–0404, expiration date: 7/31/02, renewal; Application for Engine Emission Certification and Averaging, Banking, and Trading for New Nonroad Spark-ignition (SI) Engines At or Below 19 kilowatts, EPA Number 1695.06, OMB Control Number 2060–0338, expiring on 11/30/00, renewal.

Before submitting the ICR to OMB for review and approval, EPA is soliciting comments on specific aspects of the proposed information collection as described below.

DATES: Comments must be submitted on or before February 9, 2001.

ADDRESSES: Office of Transportation and Air Quality, Certification and Compliance Division, Engine Programs Group, Ariel Rıos Building, 1200 Pennsylvania Ave., NW., Mail Code 6403J, Washington, DC 20460. Interested persons may request a copy of the ICRs without charge from the contact person below.

FOR FURTHER INFORMATION CONTACT: Nydia Y. Reyes-Morales, tel.: (202) 564–9264; fax: (202) 565–2057; e-mail: reyes-morales.nydia@epa.gov

SUPPLEMENTARY INFORMATION:

Affected entities: Entities potentially affected by this action are those which manufacture nonroad compression-ignition engines or nonroad spark ignition engines at or below 19 kW.

Title: Non-road Compression-ignition Engine and On-road Heavy Duty Engine Application for Emission Certification, and Participation in the Averaging, Banking, and Trading Program, EPA ICR Number 1851.03, OMB Control Number 2060–0404, *expiration date:* 7/31/2002. Although this ICR expires in 2002, we are renewing it now to include the requirements of ICR No.1684.04, Amendment to the Information Collection Request Compression Ignition Non-Road Engine Certification Application (OMB No. 2060–0287), which expires on 11/30/00. Both ICRs include burden associated with the emission certification and AB&T programs for non-road compression-ignition engines. However, ICR No. 1851

includes the burden for engines rated over 37 kW (50 Hp), whereas ICR No. 1684 includes the burden for engines under 37 kW. There are no major differences between the two categories, except that they became regulated at different times. With this consolidation, we combine all the burden associated with the certification and AB&T programs for non-road compression-ignition engines. See below for a description of the collection.

Title: Nonroad Spark Ignition (SI) Engines At or Below 19 kilowatts Certification Application and Participation in the Averaging, Banking, and Trading Program, (OMB Control Number 2060–0338; EPA ICR No.1695.06), expiring on 11/30/00.

Abstract: Both of these information collections (ICR Nos. 1851.03 and 1695.06) are requested under the authority of Title II of the Clean Air Act (42 U.S.C. 7521 *et seq.*). Under this Title, EPA is charged with issuing certificates of conformity for those engines which comply with applicable emission standards. Such a certificate must be issued before engines may be legally introduced into commerce. To apply for a certificate of conformity, manufacturers are required to submit descriptions of their planned production line, including detailed descriptions of the emission control system, and test data. This information is organized by ''engine family'' groups expected to have similar emission characteristics. There are also recordkeeping and labeling requirements.

Those manufacturers electing to participate in the Averaging Banking and Trading Program for either non-road compression ignition engines or spark ignition engines at or below 19 kilowatts are also required to submit information regarding the calculation of projected and actual generation and usage of credits in an initial report, end-of-the-year report and final report. These reports are used for certification and enforcement purposes. Manufacturers need to maintain records for eight years on the engine families participating in the program.

All the information requested by these collections is required for various programs' implementation and activities. The information is collected by the Engine Programs Group, Certification and Compliance Division, Office of Transportation and Air Quality, Office of Air and Radiation. Certification information submitted by manufacturers is held as confidential until the specific engine to which it pertains is available for purchase. Confidentiality of proprietary information is granted in accordance with the Freedom of Information Act, EPA regulations at 40 CFR 2, and class determinations issued by EPA's Office of General Counsel. An agency may not conduct or sponsor, and a person is not required to respond to, a collection of information unless it displays a currently valid OMB control number. The OMB control numbers for EPA's regulations are listed in 40 CFR part 9 and 48 CFR Chapter 15.

The EPA would like to solicit comments to:

(i) Evaluate whether the proposed collection of information is necessary for the proper performance of the functions of the agency, including whether the information will have practical utility;

(ii) Evaluate the accuracy of the agency's estimate of the burden of the proposed collection of information, including the validity of the methodology and assumptions used;

(iii) Enhance the quality, utility, and clarity of the information to be collected; and

(iv) Minimize the burden of the collection of information on those who are to respond, including through the use of appropriate automated electronic, mechanical, or other technological collection techniques or other forms of information technology, *e.g.,* permitting electronic submission of responses.

TABLE I.—BURDEN STATEMENT

ICR	Estimated average burden hours/ response	Frequency	Number of respondents (#engine families)	Cost per response	Capital and start up cost	Operation/ maintenance costs	Purchase of services cost
Emission Certification:							
On-road HDE*	327.0	1	20 (152)	$23,304.00	0	$14,746.00	0
Non-road CI >50 Hp*	199.7	1	46 (202)	13,127.50	0	9.00	0
Non-road CI >50 Hp	400.0	1	23 (200)	20,000.00		9.00	
AB&T:							
On-road HDE	333	1	7	23,310.00	0	0	0
>50 Hp*	460	1	5	32,169.00	0	0	0
<50 Hp	460	1	0	32,169.00	0	0	0
SI Certification	256	1	50 (220)	16,847.50	0	9.00	0
SI AB&T	113	1	50	6,884.00	0	0	0

*Burden already approved by OMB.

Burden means the total time, effort, or financial resources expended by persons to generate, maintain, retain, or disclose or provide information to or for a Federal agency. This includes the time needed to review instructions; develop, acquire, install, and utilize technology and systems for the purposes of collecting, validating, and verifying information, processing and maintaining information, and disclosing and providing information; adjust the existing ways to comply with any previously applicable instructions and requirements; train personnel to be able to respond to a collection of information; search data sources; complete and review the collection of information; and transmit or otherwise disclose the information.

Dated: December 2, 2000.

Robert Perciasepe,

Assistant Administrator for Air and Radiation.

[FR Doc. 00–31482 Filed 12–8–00; 8:45 am]

BILLING CODE 6560–50–P

ENVIRONMENTAL PROTECTION AGENCY

[FRL–6914–2]

Agency Information Collection Activities; Submission for OMB Review; Comment Request; Measuring Success of EPA Compliance Assistance

AGENCY: Environmental Protection Agency (EPA).

ACTION: Notice.

SUMMARY: In compliance with the Paperwork Reduction Act (44 U.S.C. 3501 *et seq.*), this notice announces that the following Information Collection Request (ICR) has been forwarded to the Office of Management and Budget (OMB) for approval: Measuring Success of EPA Compliance Assistance ICR number 1921.01. The ICR describes the nature of the information collection, the expected burden and cost to collect the information, and the actual collection instruments.

DATES: Comments must be submitted on or before January 10, 2001.

ADDRESSES: Send comments, referencing EPA ICR No. 1921.01 to the following addresses: Sandy Farmer, U.S. Environmental Protection Agency, Collection Strategies Division (Mail Code 2822), 1200 Pennsylvania Avenue, NW., Washington, DC 20460; and to Office of Information and Regulatory Affairs, Office of Management and Budget (OMB), Attention: Desk Officer for EPA, 725 17th Street, NW., Washington, DC 20503.

FOR FURTHER INFORMATION CONTACT: For a copy of the ICR contact Sandy Farmer at EPA by phone at (202) 260–2740, by email at *farmer.sandy@epa.gov,* or download off the Internet at *http://www.epa.gov/icr* and refer to EPA ICR No. 1921.01. For technical questions about the ICR contact Tracy Back, Office of Compliance, (202) 564–7076.

SUPPLEMENTARY INFORMATION:

Title: Information Collection Request for Compliance Assistance Tool Evaluation Surveys, EPA ICR Number 1921.01. This is a new collection.

Abstract: This will be a voluntary collection of information to gather customer satisfaction and behavioral change feedback on EPA compliance assistance, as well as data on the resulting impact on compliance.

There are two components to this voluntary collection of information. First, EPA proposes to obtain customer feedback on a variety of compliance assistance tools and activities, including: Compliance assistance products; seminars/workshops; on-site visits; telephone assistance/hotlines; and Internet Websites. In addition to assessing customer satisfaction with EPA's compliance assistance tools and activities, EPA is also interested in learning what actions were or will be taken by survey respondents to improve their compliance status and environmental performance, in whole or in part, as a result of the compliance assistance provided by EPA.

Secondly, EPA proposes to seek information from state/local regulating agencies and committees regarding the impact of EPA's compliance assistance activities on the state of compliance. The regulating agencies and state/local committees will be asked whether EPA's compliance assistance initiatives resulted in improved compliance.

An agency may not conduct or sponsor, and a person is not required to respond to, a collection of information unless it displays a currently valid OMB control number. The OMB control numbers for EPA's regulations are listed in 40 CFR part 9 and 48 CFR Chapter 15. The **Federal Register** document required under 5 CFR 1320.8(d), soliciting comments on this collection of information was published on August 10, 1999 (64 FR 43380); no comments were received.

It is estimated that approximately 317,920 entities may voluntarily complete and return a compliance assistance activity or tool assessment survey on an annual basis. EPA estimates that participating entities may need to spend between five to twenty minutes to complete either the complete compliance assistance product, seminar/workshop; on-site visit; telephone assistance/hotline; or internet website assessment survey. Therefore, a total of 28,374 person hours annually may be expended to provide EPA with data to evaluate the effectiveness of its compliance assistance tools and activities. This burden hour estimate translates to a cost of $6.24 per facility who voluntarily completes the survey and a total cost to industry of $1,966,295. The costs were calculated based on $33.00 per hour plus a 110 overhead for a total labor cost of $69.30.

In addition, EPA estimates that participating state and local governments may need to spend two hours and 55 minutes to complete the ''impact of compliance activities'' survey instrument. Therefore, a total of 2,306 person hours within the regulated community may be expended annually to provide EPA with data to evaluate the impact of its compliance assistance activities. This burden hour estimate translates to a cost of $1,610 per state or local government who voluntarily completes the survey and a total cost of $85,367. These costs were calculated based on labor rates of $17.48 per hour plus 110% overhead for a total labor rate of $36.71, plus $30.34 plus 110% overhead for a supervisory rate of $63.71. The labor rates were obtained from the United States of Commerce, Bureau of Labor Statistics, March 1998, Table 4: Employment Costs of State and Local Government.

Burden Statement: The average time to complete the survey for participating entities is 5–20 minutes and nearly 3 hours for state and local governments . Burden means the total time, effort, or financial resources expended by persons to generate, maintain, retain, or disclose or provide information to or for a Federal agency. This includes the time needed to review instructions; develop, acquire, install, and utilize technology and systems for the purposes of collecting, validating, and verifying information, processing and maintaining information, and disclosing and providing information; adjust the existing ways to comply with any previously applicable instructions and requirements; train personnel to be able to respond to a collection of information; search data sources; complete and review the collection of information; and transmit or otherwise disclose the information.

Respondents/Affected Entities: state/local agencies and participating entities that have used EPA compliance tools.

Estimated Number of Respondents: 317,920.

Frequency of Response: one time.

Estimated Total Annual Hour Burden: 30,679 hours.

Estimated Total Annualized Capital, O&M Cost Burden: $0.

Send comments on the Agency's need for this information, the accuracy of the provided burden estimates, and any suggested methods for minimizing respondent burden, including through the use of automated collection techniques to the addresses listed above. Please refer to EPA ICR No. 1921.01 in any correspondence.

Dated: November 28, 2000.

Oscar Morales,

Director, Collection Strategies Division.

[FR Doc. 00–31467 Filed 12–8–00; 8:45 am]

BILLING CODE 6560–50–U

ENVIRONMENTAL PROTECTION AGENCY

[FRL–6915–1]

Operating Permits Program; Notice of Comment Period on Program Deficiencies

AGENCY: Environmental Protection Agency (EPA).

ACTION: Notice of comment period.

SUMMARY: The EPA is announcing a 90-day comment period for members of the public to identify deficiencies they perceive exist in State and local agency operating permits programs required by title V of the Clean Air Act (Act). The deficiencies the public claims exist can be either deficiencies in the substance of the approved program or deficiencies in how a permitting authority is implementing its program. The Agency will consider information received from the public and determine whether it agrees or disagrees with the purported deficiencies and will then publish notices of those findings. Where the Agency agrees there is a deficiency, it will publish a notice of deficiency and establish a timeframe for the permitting authority to take action to correct the deficiency.

DATES: Comments identifying possible deficiencies in State and local operating permits programs must be received by March 12, 2001.

ADDRESSES: Comments on possible operating permits program or implementation deficiencies must be mailed to the appropriate EPA Regional Office. Addresses for the EPA Regional Offices to which comments should be sent and the permitting agencies covered by each Region are as follows:

Region I: Susan E. T. Studlien, Deputy Director, Office of Ecosystem Protection, EPA Region I (WAA), #1 Congress Street, Box 1100, Boston, Massachusetts 92114 for Connecticut, Maine, Massachusetts, New Hampshire, Rhode Island, and Vermont.

Region II: Kathleen C. Callahan, Director, Division of Environmental Planning and Protection, EPA Region II, 290 Broadway, New York, New York 10007–1866 for New Jersey, New York, Puerto Rico, and Virgin Islands.

Region III: Judith M. Katz, Director, Air Protection Division, EPA Region III (3AP00), 1650 Arch Street, Philadelphia, Pennsylvania 19103–2029 for Delaware, District of Columbia, Maryland, Pennsylvania, Virginia, and West Virginia.

Region IV: Winston A. Smith, Director, Air, Pesticides, and Toxics Management Division, EPA Region IV, 12th Floor, 61 Forsyth Street, SW, Atlanta, Georgia 30303 for Alabama; Huntsville, Alabama; Jefferson County, Alabama; Florida; Georgia; Kentucky; Louisville-Jefferson County, Kentucky; Mississippi; North Carolina; Forsyth County, North Carolina; Western North Carolina; Mecklenburg County, North Carolina; South Carolina; Tennessee; Nashville-Davidson County, Tennessee; Hamilton County, Tennessee; Knox County, Tennessee; and Memphis-Shelby County, Tennessee.

Region V: Bharat Mathur, Director, Air and Radiation Division, EPA Region V (5A–18J), 77 W. Jackson Boulevard, Chicago, Illinois 60604 for Illinois, Indiana, Michigan, Minnesota, Ohio, and Wisconsin.

Region VI: Carl Edlund, Director, Multimedia Planning and Permitting Division, EPA Region VI (6T), 1445 Ross Avenue Dallas, Texas 75202–2733 for Arkansas; Louisiana; New Mexico; Albuquerque, New Mexico; Oklahoma; and Texas.

Region VII: William A. Spratlin, Director, Air, RCRA, and Toxics Division, EPA Region VII, 901 N. 5th Street, Kansas City, Kansas 66101–2907 for Iowa; Kansas; Missouri; Nebraska; Lincoln-Lancaster County, Nebraska; and Omaha-Douglas County, Nebraska.

Region VIII: Richard R. Long, Director, Air and Radiation Program, EPA Region VIII (8P–AR), 999 18th Street, Suite 500, Denver, Colorado 80202–2466 for Colorado; Montana; North Dakota; South Dakota; Utah; and Wyoming.

Region IX: Amy Zimpfer, Acting Director, Air Division EPA Region IX (A–1), 75 Hawthorne Street, San Francisco, California 94105 for Arizona; Maricopa County, Arizona; Pima County, Arizona; Pinal County, Arizona; all 34 local districts in California; Nevada; Washoe County, Nevada; Clark County Nevada; and Hawaii.

Region X: Barbara McAllister, Director, Office of Air EPA Region X (AT–081), 1200 Sixth Avenue, Seattle, Washington 98101 for Alaska; Idaho; Oregon; Lane Regional, Oregon; Washington; and all seven local agencies in Washington.

FOR FURTHER INFORMATION CONTACT: Roger Powell (telephone 919–541–5331), Mail Drop 12, EPA, Information Transfer and Program Integration Division, Research Triangle Park, North Carolina, 27711. Internet address is: powell.roger@epa.gov.

SUPPLEMENTARY INFORMATION:

Background

Pursuant to section 502(b) of the Act, EPA has promulgated regulations establishing the minimum requirements for State and local air agency operating permits programs. We promulgated these regulations on July 21, 1992 (57 FR 32250), in part 70 of title 40, chapter I, of the Code of Federal Regulations. Section 502(d) of the Act requires each State to develop and submit to EPA an operating permits program meeting the requirements of the part 70 regulations and requires us to approve or disapprove the submitted program. In some cases, States have delegated authority to local county or city air agencies to administer operating permits programs in their jurisdictions. These operating permits programs must meet the same requirements as the State programs. For 99 operating permits programs, we granted ''interim'' rather than full approval because the programs substantially met, but did not fully meet, the provisions of part 70. For interim approved programs, we identified in the notice of interim approval those program deficiencies that will have to be corrected before we will grant the program full approval. Some of those 99 programs have since been granted full approval and the remainder still have interim approval status.

After a State or local permitting program is granted full or interim approval, EPA has oversight of the program to insure that the program is implemented correctly and is not changed in an unacceptable manner. Section 70.4(i) of the part 70 regulations requires permitting authorities to keep us apprised of any proposed program modifications and also to submit any program modifications to us for approval. Section 70.10(b) requires any approved operating permits program to be implemented '' * * * in accordance with the requirements of this part and of any agreement between the State and the Administrator concerning operation of the program.'' That section goes on to specify actions, as described more fully below, we will take if the permitting authority does not adequately implement the program.

Discussion of Action

On May 22, 2000, EPA issued a final action in the **Federal Register** extending the interim approval period for 86 operating permits programs until December 1, 2001. The Sierra Club and New York Public Interest Research Group (NYPIRG) challenged our final action in the Court of Appeals for the District of Columbia Circuit. In the context of discussing settlement of that litigation, Sierra Club and NYPIRG raised concerns that many programs with interim approval, as well as those with full approval, have program and or

implementation deficiencies. Sierra Club and NYPIRG recognized that sections 70.4(i) and 70.10(b) provide authority for us to require permitting authorities to correct program or implementation deficiencies, but were concerned that we had not responded timely to petitions they had filed requesting us to require such corrections. To address the concerns raised by Sierra Club and NYPIRG, we are announcing in this notice that the public may submit comments within the 90-day comment period being provided requesting us to take action consistent with the procedures in sections 70.4(i) and 70.10(b). We are further announcing that we will respond by specific dates to those comments and any petitions that have previously been submitted and will take action under sections 70.4(i) and 70.10(b), requiring permitting authorities to correct any program or implementation deficiencies.

This action applies to all approved part 70 operating permits programs, regardless of whether they have been granted full or interim approval. Within the timeframes specified below, we will take action to respond to any claims of deficiency.

Do not include in your comments any program deficiencies that were identified as such by us when we granted the program interim approval. Those program deficiencies are already identified and permitting authorities are already taking action to correct them in order to avoid imposition of the Federal permitting program on December 1, 2001. We will not consider comments that generically assert deficiencies for multiple programs. Be specific in your comments both as to the State or local permitting program and the deficiencies being raised. With respect to program deficiencies, please note the specific provisions of concern in the permitting authority's regulations or the State statute and identify the provision or provisions in part 70 or title V with which the program conflicts. For implementation deficiencies, identify the relevant regulatory or statutory provision that is not being properly implemented and provide the bases for the claim that the permitting authority is not properly implementing that portion of the program. For example, if you assert that permits are being issued in a manner inconsistent with an element of the program, identify specific permits that you believe were incorrectly issued and the ways in which you believe those permits to be deficient.

Send comments concerning potential deficiencies to the appropriate EPA Regional Office, the addresses for which are provided above under **ADDRESSES.**

After reviewing comments received within the comment period, we will issue a notice of deficiency (NOD) for any claimed shortcoming in an operating permits program that we agree constitutes a ''deficiency'' within the meaning of part 70. For those alleged deficiencies with which we disagree, we will publish a notice explaining our reasons for not making a finding of deficiency. We will substantively consider all specific claims of deficiency, including claims that could have been raised during the initial approval process. For any NOD, a timeframe for correction of the deficiencies consistent with sections 70.4(i) or 70.10(b) will be specified in the notice. Consistent with section 70.4(i), in no event will a permitting authority be allowed more than 2 years to correct a program deficiency.

By December 1, 2001, we will publish NOD's for deficiencies identified for programs that have not been granted full approval as of December 11, 2000. We will at the same time also publish a notice identifying any alleged problems that we do not agree are deficiencies. For programs that have been granted full approval as of December 11, 2000, we will publish any NOD's by April 1, 2002, along with any notices of disagreement. We believe these time periods provide adequate time for us to respond to comments raised during the aforementioned comment period.

Dated: December 5, 2000

Elizabeth Craig,

Acting Assistant Administrator for Air and Radiation.

[FR Doc. 00–31483 Filed 12–8–00; 8:45 am]

BILLING CODE 6560–50–P

ENVIRONMENTAL PROTECTION AGENCY

[OPPTS–51958; FRL–6759–6]

Certain New Chemicals; Receipt and Status Information

AGENCY: Environmental Protection Agency (EPA).

ACTION: Notice.

SUMMARY: Section 5 of the Toxic Substances Control Act (TSCA) requires any person who intends to manufacture (defined by statute to include import) a new chemical (i.e., a chemical not on the TSCA Inventory) to notify EPA and comply with the statutory provisions pertaining to the manufacture of new chemicals. Under sections 5(d)(2) and 5(d)(3) of TSCA, EPA is required to publish a notice of receipt of a premanufacture notice (PMN) or an application for a test marketing exemption (TME), and to publish periodic status reports on the chemicals under review and the receipt of notices of commencement to manufacture those chemicals. This status report, which covers the period from October 23, 2000 to October 27, 2000, consists of the PMNs pending or expired, and the notices of commencement to manufacture a new chemical that the Agency has received under TSCA section 5 during this time period. The ''S'' and ''G'' that precede the chemical names denote whether the chemical idenity is specific or generic.

ADDRESSES: Comments may be submitted by mail, electronically, or in person. Please follow the detailed instructions for each method as provided in Unit I. of the **SUPPLEMENTARY INFORMATION.** To ensure proper receipt by EPA, it is imperative that you identify docket control number OPPTS–51958 and the specific PMN number in the subject line on the first page of your response.

FOR FURTHER INFORMATION CONTACT: Barbara Cunningham, Director, Office of Program Management and Evaluation, Office of Pollution Prevention and Toxics (7401), Environmental Protection Agency, 1200 Pennsylvania Ave., NW., Washington, DC 20460; telephone number: (202) 554–1404; e-mail address: TSCA-Hotline@epa.gov.

SUPPLEMENTARY INFORMATION:

I. General Information

A. Does this Action Apply to Me?

This action is directed to the public in general. As such, the Agency has not attempted to describe the specific entities that this action may apply to. Although others may be affected, this action applies directly to the submitter of the premanufacture notices addressed in the action. If you have any questions regarding the applicability of this action to a particular entity, consult the person listed under **FOR FURTHER INFORMATION CONTACT.**

B. How Can I Get Additional Information, Including Copies of this Document and Other Related Documents?

1. *Electronically.* You may obtain copies of this document and certain other available documents from the EPA Internet Home Page at http://www.epa.gov/. On the Home Page select ''Laws and Regulations,'' ''Regulations and Proposed Rules,'' and then look up the entry for this document under the ''**Federal Register**—Environmental

Documents.'' You can also go directly to the **Federal Register** listings at http://www.epa.gov/fedrgstr/.

2. *In person*. The Agency has established an official record for this action under docket control number OPPTS–51958. The official record consists of the documents specifically referenced in this action, any public comments received during an applicable comment period, any test data submitted by the manufacturer/importer and other information related to this action, including any information claimed as confidential business information (CBI). This official record includes the documents that are physically located in the docket, as well as the documents that are referenced in those documents. The public version of the official record does not include any information claimed as CBI. The public version of the official record, which includes printed, paper versions of any electronic comments submitted during an applicable comment period, is available for inspection in the TSCA Nonconfidential Information Center, North East Mall Rm. B–607, Waterside Mall, 401 M St., SW., Washington, DC. The Center is open from noon to 4 p.m., Monday through Friday, excluding legal holidays. The telephone number of the Center is (202) 260–7099.

C. How and to Whom Do I Submit Comments?

You may submit comments through the mail, in person, or electronically. To ensure proper receipt by EPA, it is imperative that you identify docket control number OPPTS–51958 and the specific PMN number in the subject line on the first page of your response.

1. *By mail*. Submit your comments to: Document Control Office (7407), Office of Pollution Prevention and Toxics (OPPT), Environmental Protection Agency, 1200 Pennsylvania Ave., NW., Washington, DC 20460.

2. *In person or by courier*. Deliver your comments to: OPPT Document Control Office (DCO) in East Tower Rm. G–099, Waterside Mall, 401 M St., SW., Washington, DC. The DCO is open from 8 a.m. to 4 p.m., Monday through Friday, excluding legal holidays. The telephone number for the DCO is (202) 260–7093.

3. *Electronically*. You may submit your comments electronically by e-mail to: ''oppt.ncic@epa.gov,'' or mail your computer disk to the address identified in this unit. Do not submit any information electronically that you consider to be CBI. Electronic comments must be submitted as an ASCII file avoiding the use of special characters and any form of encryption. Comments and data will also be accepted on standard disks in WordPerfect 6.1/8.0 or ASCII file format. All comments in electronic form must be identified by docket control number OPPTS–51958 and the specific PMN number. Electronic comments may also be filed online at many Federal Depository Libraries.

D. How Should I Handle CBI that I Want to Submit to the Agency?

Do not submit any information electronically that you consider to be CBI. You may claim information that you submit to EPA in response to this document as CBI by marking any part or all of that information as CBI. Information so marked will not be disclosed except in accordance with procedures set forth in 40 CFR part 2. In addition to one complete version of the comment that includes any information claimed as CBI, a copy of the comment that does not contain the information claimed as CBI must be submitted for inclusion in the public version of the official record. Information not marked confidential will be included in the public version of the official record without prior notice. If you have any questions about CBI or the procedures for claiming CBI, please consult the person listed under **FOR FURTHER INFORMATION CONTACT**.''

E. What Should I Consider as I Prepare My Comments for EPA?

You may find the following suggestions helpful for preparing your comments:

1. Explain your views as clearly as possible.

2. Describe any assumptions that you used.

3. Provide copies of any technical information and/or data you used that support your views.

4. If you estimate potential burden or costs, explain how you arrived at the estimate that you provide.

5. Provide specific examples to illustrate your concerns.

6. Offer alternative ways to improve the notice or collection activity.

7. Make sure to submit your comments by the deadline in this document.

8. To ensure proper receipt by EPA, be sure to identify the docket control number assigned to this action in the subject line on the first page of your response. You may also provide the name, date, and **Federal Register** citation.

II. Why is EPA Taking this Action?

Section 5 of TSCA requires any person who intends to manufacture (defined by statute to include import) a new chemical (i.e., a chemical not on the TSCA Inventory to notify EPA and comply with the statutory provisions pertaining to the manufacture of new chemicals. Under sections 5(d)(2) and 5(d)(3) of TSCA, EPA is required to publish a notice of receipt of a PMN or an application for a TME and to publish periodic status reports on the chemicals under review and the receipt of notices of commencement to manufacture those chemicals. This status report, which covers the period from October 23, 2000 to October 27, 2000, consists of the PMNs pending or expired, and the notices of commencement to manufacture a new chemical that the Agency has received under TSCA section 5 during this time period.

III. Receipt and Status Report for PMNs

This status report identifies the PMNs and TMEs, both pending or expired, and the notices of commencement to manufacture a new chemical that the Agency has received under TSCA section 5 during this time period. If you are interested in information that is not included in the following tables, you may contact EPA as described in Unit II. to access additional non-CBI information that may be available. The ''S'' and ''G'' that precede the chemical names denote whether the chemical idenity is specific or generic.

In table I, EPA provides the following information (to the extent that such information is not claimed as CBI) on the PMNs received by EPA during this period: the EPA case number assigned to the PMN; the date the PMN was received by EPA; the projected end date for EPA's review of the PMN; the submitting manufacturer; the potential uses identified by the manufacturer in the PMN; and the chemical identity.

TABLE I. 18 PREMANUFACTURE NOTICES RECEIVED FROM: 10/23/00 TO 10/27/00

Case No.	Received Date	Projected Notice End Date	Manufacturer/Importer	Use	Chemical
P–01–0060	10/23/00	01/21/01	CBI	(G) Intermediate	(G) Alkyl phosphate
P–01–0061	10/23/00	01/21/01	Vantico Inc.	(S) Hardener for waterborne anticorrosive coatings;hardener for waterborne epoxy cement for civil engineering applic.	(G) Reaction products of polypropylene glycol diamine with an epoxide
P–01–0062	10/23/00	01/21/01	CBI	(S) Specialty polymer	(G) Substituted bicyclic olefin
P–01–0063	10/23/00	01/21/01	CBI	(S) Specialty polymer	(G) Substituted bicyclic olefin
P–01–0064	10/24/00	01/22/01	Samsung Information Systems America	(G) Compound in color dispersion	(G) Acrylate copolymer
P–01–0065	10/23/00	01/21/01	CBI	(G) Processing aid	(G) Alkyl phosphate derivative
P–01–0066	10/24/00	01/22/01	Vantico Inc.	(S) Hardener for waterborne anti-corrosive coatings;hardener for waterborne epoxy cement for civil engineering applic.	(G) Propanenitrile, 3-{[6-amino-2,2,4(or 2,4,4)-trimethylhexyl]amino}-, polymers with 5-amino-1,3,3-trimethylcyclohexanemethanamine, bisphenol a, bisphenol a-epichlorohydrin polymer-2,2,4(or 2,4,4)-trimethyl-1,6-hexanediamine reaction products, with glycidyl o-tolyl ether and an epoxide
P–01–0067	10/24/00	01/22/01	BASF Corporation	(G) Internal press release	(G) Substituted polyether polyurethane
P–01–0068	10/24/00	01/22/01	CBI	(G) Processing agent	(S) Fatty acids, C_{16-18}, esters with pentaerythritol
P–01–0069	10/23/00	01/21/01	Bridgestone/Firestone, Inc.	(G) Pigment for rubber compound	(G) Substitute naphtalene derivatives
P–01–0070	10/25/00	01/23/01	Kelmar Industries	(S) Plastifier or softener for pur-fine coating;paint additive for artificial leather; softener or extender for fc-impregnation	(G) Polydimethylsiloxane with aminoalkyl groups
P–01–0071	10/26/00	01/24/01	CIBA Specialty Chemicals Corporation	(S) Uv absorber for use in photographic emulsions	(G) Substituted triazine
P–01–0072	10/27/00	01/25/01	BASF Corporation	(G) Intermediate	(G) Oxyalkylated isodecyl alcohol
P–01–0073	10/27/00	01/25/01	BASF Corporation	(G) Lubricant	(G) Tall oil ester of oxyalkylated isodecyl alcohol
P–01–0074	10/26/00	01/24/01	JSR Corporation	(G) Coating agent	(G) Modified styrene acrylate polymer
P–01–0075	10/27/00	01/25/01	CIBA Specialty Chemicals Corporation	(S) Interlayer scavenger for photographic chromogenic color paper	(G) Substituted benzofuranone
P–01–0076	10/27/00	01/25/01	Eastman Chemical Company	(S) Polyester for injection molding	(G) Dimethyl terephthalate, polymer with cyclohexanedimethanol and disubstituted benzenedicarboxylic acid
P–01–0077	10/27/00	01/25/01	Eastman Chemical Company	(G) Raw material	(G) Disubstituted benzenedicarboxylic acid

In table II, EPA provides the following information (to the extent that such information is not claimed as CBI) on the Notices of Commencement to manufacture received:

TABLE II. 15 NOTICES OF COMMENCEMENT FROM: 10/23/00 TO 10/27/00

Case No.	Received Date	Commencement/ Import Date	Chemical
P–00–0395	10/23/00	10/03/00	(G) Urethane acrylate
P–00–0471	10/24/00	10/17/00	(S) [1,1'-biphenyl]-2,2'-disulfonic acid, 4,4'-bis[[1-(3-aminophenyl)-4,5-dihydro-3-methyl-5-oxo-1h-pyrazol-4-yl]azo]-disodium salt, reaction products with2,2'-[1,2-ethanediylbis(oxymethylene)]bis[oxirane],2',4',5',7'tetrabromo-3',6'-dihydroxyspiro[isobenzofuran-1(3h),9'-[9h]xanthen]-3-one disodium salt and 2',4',5',7'-tetrabromo-4,5,6,7-tetrachloro-3',6'-dihydroxyspiro[isobenzofuran-1(3h),9'-[9h]xanthen]-3-one disodium salt
P–00–0555	10/24/00	09/21/00	(S) Neodecanoic acid, ethenyl ester, polymer with ethene and ethenyl acetate
P–00–0708	10/23/00	10/18/00	(G) Chromate(2-), [3-[(4,5-dihydro-3-methyl-5-oxo-1-phenyl-1h-pyrazol-4-yl)azo]-4-hydroxy-(substituted)][2-[[(2-substituted)]]-4-nitrophenolato(2-)-n2, o1, o2]-, disodium
P–00–0738	10/24/00	10/16/00	(S) Formaldehyde, reaction products with 1,3-benzenedimethanamine and bisphenol a

TABLE II. 15 NOTICES OF COMMENCEMENT FROM: 10/23/00 TO 10/27/00—Continued

Case No.	Received Date	Commencement/ Import Date	Chemical
P–00–0794	10/23/00	10/06/00	(G) Chloroformate
P–00–0810	10/27/00	10/01/00	(G) Heterocyclic alkyl alcohol
P–00–0819	10/23/00	10/16/00	(S) 1,1-cyclopropanedicarboxylic acid, dimethyl ester
P–00–0868	10/25/00	10/11/00	(G) Pyrazolotriazole derivative
P–00–0920	10/24/00	10/17/00	(G) Methacrylate copolymer salt
P–00–0975	10/26/00	10/16/00	(G) Polyester resin
P–00–0976	10/26/00	10/23/00	(G) Polyester resin
P–00–0991	10/24/00	10/16/00	(G) Formaldehyde, (chloromethyl)oxirane/phenol polymer, modified with organophsophorous derivative
P–98–0948	10/24/00	10/18/00	(G) Polyester polyether urethane block copolymer
P–99–0376	10/24/00	10/13/00	(G) Hydroxy alkyldiene

List of Subjects

Environmental protection, Chemicals, Premanufacturer notices.

Dated: November 29, 2000.

Deborah A. Williams,

Acting Director, Information Management Division, Office of Pollution Prevention and Toxics.

[FR Doc. 00–31469 Filed 12–8–00; 8:45 am]

BILLING CODE 6560–50–S

FEDERAL COMMUNICATIONS COMMISSION

Notice of Public Information Collection(s) being Reviewed by the Federal Communications Commission

December 5, 2000.

SUMMARY: The Federal Communications Commission, as part of its continuing effort to reduce paperwork burden invites the general public and other Federal agencies to take this opportunity to comment on the following information collection(s), as required by the Paperwork Reduction Act of 1995, Public Law 104–13. An agency may not conduct or sponsor a collection of information unless it displays a currently valid control number. No person shall be subject to any penalty for failing to comply with a collection of information subject to the Paperwork Reduction Act (PRA) that does not display a valid control number. Comments are requested concerning (a) whether the proposed collection of information is necessary for the proper performance of the functions of the Commission, including whether the information shall have practical utility; (b) the accuracy of the Commission's burden estimate; (c) ways to enhance the quality, utility, and clarity of the information collected; and (d) ways to minimize the burden of the collection of information on the respondents, including the use of automated collection techniques or other forms of information technology.

DATES: Written comments should be submitted on or before January 10, 2001. If you anticipate that you will be submitting comments, but find it difficult to do so within the period of time allowed by this notice, you should advise the contact listed below as soon as possible.

ADDRESSES: Direct all comments to Judy Boley, Federal Communications Commission, Room 1–C804, 445 12th Street, SW., DC 20554 or via the Internet to jboley@fcc.gov.

FOR FURTHER INFORMATION CONTACT: For additional information or copies of the information collection(s), contact Judy Boley at 202–418–0214 or via the Internet at jboley@fcc.gov.

SUPPLEMENTARY INFORMATION:

OMB Control No.: 3060–0942.

Title: Access Charge Reform, Price Cap Performance Review for Local Exchange Carriers, Low-Volume Long Distance Users, Federal-State Joint Board on Universal Service.

Form No.: N/A.

Type of Review: Revision of a currently approved collection.

Respondents: Business or other for-profit.

Number of Respondents: 27 respondents; 108 responses.

Estimated Time Per Response: 5 hours – 60 hours.

Frequency of Response: Recordkeeping requirement, third party disclosure requirement and quarterly and annual reporting requirements.

Total Annual Burden: 6,677 hours.

Total Annual Cost: N/A.

Needs and Uses: The Commission took action to further accelerate the development of competition in the local and long-distance telecommunications markets, and to further establish explicit universal service support that will be sustainable in an increasingly competitive marketplace, pursuant to the mandate of the 1996 Act. The Commission requires tariff filings, quarterly and annual data filings and cost support information to be reported under the Coalition for Affordable Local and Long Distance Service (CALLS) proposal.

The burden for this information collection has been reduced by 6,081 hours due the completion of the October 15, 2000 supplemental filing. As noted in our previous submission to the Office of Management and Budget (OMB), carriers were required to make a one-time supplemental filing to update the state-approved unbundled network element (UNE)-zones.

OMB Control No.: 3060–0943.

Title: Section 54.809, Carrier Certification.

Form No.: N/A.

Type of Review: Extension of a currently approved collection.

Respondents: Business or other for-profit.

Number of Respondents: 27.

Estimated Time Per Response: 1.5 hours.

Frequency of Response: Third party disclosure requirement and annual reporting requirement.

Total Annual Burden: 41 hours.

Total Annual Cost: N/A.

Needs and Uses: Section 54.809, of the Commission's rules, requires each price cap or competitive LEC that wishes to receive universal service support to file an annual certification with the Universal Service Administrative Company (USAC) and the Commission. The certification must state that the carrier will use its interstate access universal service support only for the provision, maintenance, and upgrading of facilities and services for which the support is intended.

Federal Communications Commission.

Magalie Roman Salas,

Secretary.

[FR Doc. 00–31397 Filed 12–8–00; 8:45 am]

BILLING CODE 6712–01–P

FEDERAL COMMUNICATIONS COMMISSION

Public Information Collection Approved by Office of Management and Budget

December 1, 2000.

The Federal Communications Commission (FCC) has received Office of Management and Budget (OMB) approval for the following public information collections pursuant to the Paperwork Reduction Act of 1995, Public Law 96–511. An agency may not conduct or sponsor a collection of information unless it displays a currently valid control number. Not withstanding any other provisions of law, no person shall be subject to any penalty for failing to comply with a collection of information subject to the Paperwork Reduction Act (PRA) that does not display a valid control number. Questions concerning the OMB control numbers and expiration dates should be directed to Judy Boley, Federal Communications Commission, (202) 418–0214.

Federal Communications Commission

OMB Control No.: 3060–0957.
Expiration Date: 04/30/01
Title: Wireless Entrance 911 Service, Fourth MO&O.
Form No.: N/A.
Estimated Annual Burden: 7,500.
Description: The Fourth Memorandum Opinion and Order is part of the Commission's proceeding to establish a nationwide wireless enhanced 911 emergency communications service. The burden inherent in this decision involves guidelines for filing successful requests for waiver of the E911 Phase II regulation.

Federal Communications Commission.

Magalie Roman Salas,

Secretary.

[FR Doc. 00–31402 Filed 12–8–00; 8:45 am]

BILLING CODE 6712–01–U

FEDERAL COMMUNICATIONS COMMISSION

Policy Forum on Market Entry Barriers

AGENCY: Federal Communications Commission.

ACTION: Notice of meeting.

SUMMARY: Chairman William E. Kennard and Commissioner Gloria Tristani of the Federal Communications Commission will host a policy forum on market entry barriers faced by small, women- and minority-owned businesses in the communications industry. The purpose of the forum is to present a series of studies that examine market entry barriers, followed by a roundtable designed to further explore and discuss the findings reached in the studies.

DATES: The meeting will be held on Tuesday, December 12, 2000, from 9:30 a.m. to 1 p.m.

ADDRESSES: The meeting will be held in the FCC's Commission Meeting Room, TW–C305, 445 12th Street, SW, Washington, DC.

FOR FURTHER INFORMATION CONTACT: Cornell William Brooks, Sharon Bradford Franklin, or Steven C. Rangel, Office of General Counsel at (202) 418–1700. Anthony Bush, Office of Communications Business Opportunities at (202) 418–0990.

SUPPLEMENTARY INFORMATION: 1. The Federal Communications Commission (''FCC'') Chairman William Kennard and Commissioner Gloria Tristani will host a policy forum on market entry barriers faced by small, women- and minority-owned businesses in the communications industry on Tuesday, December 12, 2000, from 9:30 a.m. to 1 p.m. The Policy Forum will be held in the FCC's Commission Meeting Room, TW–C305, 445 12th Street, SW, Washington, DC.

2. The purpose of the forum is to present the findings of a series of studies which examine the extent, if any, to which small, women- and minority-owned firms in the communications industry experience market entry barriers. The studies were commenced pursuant to Section 257 of the Telecommunications Act of 1996, 47 U.S.C. 257, which requires that the FCC identify and eliminate market entry barriers for entrepreneurs and other small telecommunications businesses, and Section 309(j) of the Act, which requires the FCC to further opportunities in the allocation of spectrum-based services for small businesses and businesses owned by women and minorities.

3. The forum will begin with presentations by the experts who conducted studies, and will be followed by a roundtable discussion with industry practitioners, civil rights experts, and the authors to further explore and discuss the findings reached in the reports.

4. The forum is open to the public, and seating will be available on a first come, first served basis. At the end of the roundtable, we will provide the audience with an opportunity for a short question-and-answer period. All interested persons are invited to attend. Individuals with disabilities may arrange for accommodations by contacting Brian Millin at (202) 418–7426 (Voice), (202) 418–7365 (TTY), or by sending an email to *access@fcc.gov.*

Federal Communications Commission.

Shirley Suggs,

Chief, Publications Branch.

[FR Doc. 00–31366 Filed 12–8–00; 8:45 am]

BILLING CODE 6712–01–P

FEDERAL EMERGENCY MANAGEMENT AGENCY

[FEMA–1348–DR]

Hawaii; Major Disaster and Related Determinations

AGENCY: Federal Emergency Management Agency (FEMA).

ACTION: Notice.

SUMMARY: This is a notice of the Presidential declaration of a major disaster for the State of Hawaii (FEMA–1348–DR), dated November 9, 2000, and related determinations.

EFFECTIVE DATE: November 9, 2000.

FOR FURTHER INFORMATION CONTACT: Madge Dale, Response and Recovery Directorate, Federal Emergency Management Agency, Washington, DC 20472, (202) 646–3772.

SUPPLEMENTARY INFORMATION: Notice is hereby given that, in a letter dated November 9, 2000, the President declared a major disaster under the authority of the Robert T. Stafford Disaster Relief and Emergency Assistance Act (42 U.S.C. 5121 *et seq.*), as follows:

I have determined that the damage in certain areas of the State of Hawaii, resulting from severe storms and flooding beginning on October 28, 2000 and continuing through November 2, 2000, is of sufficient severity and magnitude to warrant a major disaster declaration under the Robert T. Stafford Disaster Relief and Emergency Assistance Act, 42 U.S.C. § 5121 *et seq.* (the Stafford Act), as amended by Pub. L. 106–390, October 30, 2000. I, therefore, declare that such a major disaster exists in the State of Hawaii.

In order to provide Federal assistance, you are hereby authorized to allocate from funds available for these purposes, such amounts as you find necessary for Federal disaster assistance and administrative expenses.

You are authorized to provide Individual Assistance, Public Assistance, and Hazard Mitigation in the designated areas. Consistent with the requirement that Federal assistance be supplemental, any Federal funds provided under the Stafford Act for Public Assistance or Hazard Mitigation will be limited to 75 percent of the total eligible costs.

Further, you are authorized to make changes to this declaration to the extent allowable under the Stafford Act.

The time period prescribed for the implementation of section 310(a), Priority to Certain Applications for Public Facility and Public Housing Assistance, 42 U.S.C. 5153, shall be for a period not to exceed six months after the date of this declaration.

Notice is hereby given that pursuant to the authority vested in the Director of the Federal Emergency Management Agency under Executive Order 12148, I hereby appoint William L. Carwile III of the Federal Emergency Management Agency to act as the Federal Coordinating Officer for this declared disaster.

I do hereby determine the following area of the State of Hawaii to have been affected adversely by this declared major disaster:

Hawaii County for Individual and Public Assistance.

All counties within the State of Hawaii are eligible to apply for assistance under the Hazard Mitigation Grant Program.

(The following Catalog of Federal Domestic Assistance Numbers (CFDA) are to be used for reporting and drawing funds: 83.537, Community Disaster Loans; 83.538, Cora Brown Fund Program; 83.539, Crisis Counseling; 83.540, Disaster Legal Services Program; 83.541, Disaster Unemployment Assistance (DUA); 83.542, Fire Suppression Assistance; 83.543, Individual and Family Grant (IFG) Program; 83.544, Public Assistance Grants; 83.545, Disaster Housing Program; 83.548, Hazard Mitigation Grant Program.)

James L. Witt,

Director.

[FR Doc. 00–31372 Filed 12–8–00; 8:45 am]

BILLING CODE 6718–02–P

FEDERAL EMERGENCY MANAGEMENT AGENCY

[FEMA–1349–DR]

Oklahoma; Major Disaster and Related Determinations

AGENCY: Federal Emergency Management Agency (FEMA).

ACTION: Notice.

SUMMARY: This is a notice of the Presidential declaration of a major disaster for the State of Oklahoma (FEMA–1349–DR), dated November 27, 2000, and related determinations.

EFFECTIVE DATE: November 27, 2000.

FOR FURTHER INFORMATION CONTACT: Madge Dale, Response and Recovery Directorate, Federal Emergency Management Agency, Washington, DC 20472, (202) 646–3772.

SUPPLEMENTARY INFORMATION: Notice is hereby given that, in a letter dated November 27, 2000, the President declared a major disaster under the authority of the Robert T. Stafford Disaster Relief and Emergency Assistance Act (42 U.S.C. 5121 *et seq.*), as follows:

I have determined that the damage in certain areas of the State of Oklahoma, resulting from severe storms and flooding on October 21–29, 2000, is of sufficient severity and magnitude to warrant a major disaster declaration under the Robert T. Stafford Disaster Relief and Emergency Assistance Act, 42 USC 5121, *et seq.*, as amended by the Disaster Mitigation Act of 2000, Pub. L. No. 106–390, 114 Stat. 1552 (2000), (Stafford Act). I, therefore, declare that such a major disaster exists in the State of Oklahoma.

In order to provide Federal assistance, you are hereby authorized to allocate from funds available for these purposes, such amounts as you find necessary for Federal disaster assistance and administrative expenses.

You are authorized to provide Individual Assistance, Public Assistance, and Hazard Mitigation in the designated areas. Consistent with the requirement that Federal assistance be supplemental, any Federal funds provided under the Stafford Act for Public Assistance or Hazard Mitigation will be limited to 75 percent of the total eligible costs.

Further, you are authorized to make changes to this declaration to the extent allowable under the Stafford Act.

The State Emergency Management Agency (SEMA) will manage the Public Assistance operation, including project eligibility reviews, process control, and resource allocation. FEMA will retain obligation authority, the final approval of environmental and historic preservation reviews, and will assist SEMA to the extent that such assistance is necessary and is specifically requested by SEMA.

The time period prescribed for the implementation of section 310(a), Priority to Certain Applications for Public Facility and Public Housing Assistance, 42 U.S.C. 5153, shall be for a period not to exceed six months after the date of this declaration.

Notice is hereby given that pursuant to the authority vested in the Director of the Federal Emergency Management Agency under Executive Order 12148, I hereby appoint Joe D. Bray of the Federal Emergency Management Agency to act as the Federal Coordinating Officer for this declared disaster.

I do hereby determine the following areas of the State of Oklahoma to have been affected adversely by this declared major disaster:

Caddo and Grady Counties for Individual Assistance and Public Assistance.

Carter, Comanche, Cotton, Jefferson, Kiowa, McClain and Tillman Counties for Public Assistance.

All counties within the State of Oklahoma are eligible to apply for assistance under the Hazard Mitigation Grant Program.

(The following Catalog of Federal Domestic Assistance Numbers (CFDA) are to be used for reporting and drawing funds: 83.537, Community Disaster Loans; 83.538, Cora Brown Fund Program; 83.539, Crisis Counseling; 83.540, Disaster Legal Services Program; 83.541, Disaster Unemployment Assistance (DUA); 83.542, Fire Suppression Assistance; 83.543, Individual and Family Grant (IFG) Program; 83.544, Public Assistance Grants; 83.545, Disaster Housing Program; 83.548, Hazard Mitigation Grant Program.)

James L. Witt,

Director.

[FR Doc. 00–31373 Filed 12–8–00; 8:45 am]

BILLING CODE 6718–02–P

FEDERAL EMERGENCY MANAGEMENT AGENCY

[FEMA–1349–DR]

Oklahoma; Amendment No. 1 to Notice of a Major Disaster Declaration

AGENCY: Federal Emergency Management Agency (FEMA).

ACTION: Notice.

SUMMARY: This notice amends the notice of a major disaster for the State of Oklahoma, (FEMA–1349–DR), dated November 27, 2000, and related determinations.

EFFECTIVE DATE: December 4, 2000.

FOR FURTHER INFORMATION CONTACT: Madge Dale, Response and Recovery Directorate, Federal Emergency Management Agency, Washington, DC 20472, (202) 646–3772.

SUPPLEMENTARY INFORMATION: The notice of a major disaster for the State of Oklahoma is hereby amended to include the following areas among those areas determined to have been adversely affected by the catastrophe declared a major disaster by the President in his declaration of November 27, 2000:

Carter, Comanche, and Tillman Counties for Individual Assistance (already designated for Public Assistance).

(The following Catalog of Federal Domestic Assistance Numbers (CFDA) are to be used for reporting and drawing funds: 83.537, Community Disaster Loans; 83.538, Cora Brown Fund Program; 83.539, Crisis Counseling; 83.540, Disaster Legal Services Program; 83.541, Disaster Unemployment Assistance (DUA); 83.542, Fire Suppression Assistance; 83.543, Individual and Family Grant (IFG) Program; 83.544, Public Assistance Grants; 83.545, Disaster Housing Program; 83.548, Hazard Mitigation Grant Program.)

Lacy E. Suiter,

Executive Associate Director, Response and Recovery Directorate.

[FR Doc. 00–31374 Filed 12–8–00; 8:45 am]

BILLING CODE 6718–02–P

DEPARTMENT OF HEALTH AND HUMAN SERVICES

Office of the Secretary

Findings of Scientific Misconduct

AGENCY: Office of the Secretary, HHS.

ACTION: Notice.

SUMMARY: Notice is hereby given that the Office of Research Integrity (ORI) and the Assistant Secretary for Health have taken final action in the following case:

Michael K. Hartzer, Ph.D., Oakland University: Based on the report of an investigation conducted by Oakland University and additional analysis conducted by ORI during its oversight review, PHS found that Dr. Hartzer, former Associate Professor of Biomedical Sciences, Eye Institute, Oakland University, engaged in scientific misconduct by falsifying the status of support materials in eight National Eye Institute (NEI), National Institutes of Health (NIH), grant applications.

Specifically, Dr. Hartzer falsified the status of 11 manuscripts in eight grant applications by listing them as ''accepted'' or ''in press'' when the papers had either not been subsequently published or had been rejected. The repetition of these actions over several years indicates a pattern of knowingly misrepresenting the research record.

Dr. Hartzer has accepted the PHS finding and has entered into a Voluntary Exclusion Agreement with PHS in which he has voluntarily agreed for a period of three (3) years, beginning on November 20, 2000:

(1) That he must submit with each PHS research application, continuing application, or report a statement of certification, endorsed by an institutional official, that all manuscripts or publications are properly and accurately cited in the application; the institution must also submit a copy of the certification to ORI;

(2) To exclude himself from serving in any advisory capacity to PHS, including but not limited to service on any PHS advisory committee, board, and/or peer review committee, or as a consultant.

FOR FURTHER INFORMATION CONTACT: Director, Division of Investigative Oversight, Office of Research Integrity, 5515 Security Lane, Suite 700, Rockville, MD 20852, (301) 443–5330.

Chris Pascal,

Director, Office of Research Integrity.

[FR Doc. 00–31361 Filed 12–8–00; 8:45 am]

BILLING CODE 4155–31–P

DEPARTMENT OF HEALTH AND HUMAN SERVICES

Food and Drug Administration

[Docket No. 00N–1506]

Agency Information Collection Activities; Announcement of OMB Approval; Guidance for Industry on How to Use E-Mail to Submit a Notice of Final Disposition of Animals Not Intended for Immediate Slaughter

AGENCY: Food and Drug Administration, HHS.

ACTION: Notice.

SUMMARY: The Food and Drug Administration (FDA) is announcing that a collection of information entitled ''Guidance for Industry on How to Use E-Mail to Submit a Notice of Final Disposition of Animals Not Intended For Immediate Slaughter'' has been approved by the Office of Management and Budget (OMB) under the Paperwork Reduction Act of 1995.

FOR FURTHER INFORMATION CONTACT: Denver Presley, Office of Information Resources Management (HFA–250), Food and Drug Administration, 5600 Fishers Lane, Rockville, MD 20857, 301–827–1472.

SUPPLEMENTARY INFORMATION: In the **Federal Register** of September 21, 2000 (65 FR 57193), the agency announced that the proposed information collection had been submitted to OMB for review and clearance under 44 U.S.C. 3507. An agency may not conduct or sponsor, and a person is not required to respond to, a collection of information unless it displays a currently valid OMB control number. OMB has now approved the information collection and has assigned OMB control number 0910–0453. The approval expires on November 30, 2003. A copy of the supporting statement for this information collection is available on the Internet at http://www.fda.gov/ohrms/dockets.

Dated: December 5, 2000.

Margaret M. Dotzel,

Associate Commissioner for Policy.

[FR Doc. 00–31480 Filed 12–8–00; 8:45 am]

BILLING CODE 4160–01–F

DEPARTMENT OF HEALTH AND HUMAN SERVICES

Food and Drug Administration

[Docket No. 00N–1467]

Agency Information Collection Activities; Submission for OMB Review; Comment Request; Shipment of a Blood Product Prior to Completion of Testing for Hepatitis B Surface Antigen (HbsAg); and Shipment of Blood Products Known Reactive for HBsAg

AGENCY: Food and Drug Administration, HHS.

ACTION: Notice.

SUMMARY: The Food and Drug Administration (FDA) is announcing that the proposed collection of information listed below has been submitted to the Office of Management and Budget (OMB) for review and clearance under the Paperwork Reduction Act of 1995.

DATES: Submit written comments on the collection of information by January 10, 2001.

ADDRESSES: Submit written comments on the collection of information to the Office of Information and Regulatory Affairs, OMB, New Executive Office Bldg., 725 17th St. NW., rm. 10235, Washington, DC 20503, Attn: Wendy Taylor, Desk Officer for FDA.

FOR FURTHER INFORMATION CONTACT: JonnaLynn P. Capezzuto, Office of Information Resources Management (HFA–250), Food and Drug Administration, 5600 Fishers Lane, Rockville, MD 20857, 301–827–4659.

SUPPLEMENTARY INFORMATION: In compliance with 44 U.S.C. 3507, FDA has submitted the following proposed collection of information to OMB for review and clearance.

Shipment of a Blood Product Prior to Completion of Testing for Hepatitis B Surface Antigen (HBsAg)—(21 CFR 610.40(b)); and Shipment of Blood Products Known Reactive for HBsAg—(21 CFR 610.40(d)) (OMB Control Number 0910–0168)—Extension

Under sections 351 and 361 of the Public Health Service Act (42 U.S.C. 262 and 264), FDA prescribes standards designed to ensure the safety, purity, potency, and effectiveness of biological products including blood and blood components and to prevent the transmission of communicable diseases. To accomplish this, FDA requires, among other things, that each unit of Whole Blood or Source Plasma be tested by a licensed serologic test for hepatitis

B surface antigen (HBsAg). Section 610.40(b)(4) (21 CFR 610.40(b)(4)) permits preapproved or emergency shipments of blood products for further manufacturing before the test for HBsAg is completed. To obtain approval for such shipments, the collection facility must submit a description of the control procedures to be used by the collection facility and manufacturer. Proper control procedures are essential to ensure the safe shipment, handling, and quarantine of untested or incompletely tested blood products, communication of test results, and appropriate use or disposal of the blood products based on the test results. Section 610.40(d)(1)(v) and (d)(2)(iv) requires that a collection facility notify FDA of shipments of HBsAg reactive source blood, plasma, or serum for manufacturing into hepatitis B vaccine and licensed or unlicensed in vitro diagnostic biological products, including clinical chemistry control reagents. The reporting requirements inform FDA of the shipment of potentially infectious biological products that may be capable of transmitting disease. FDA's monitoring of such activity is essential should any deviations occur that may require immediate corrective action to protect public safety.

The respondents for this information collection are the blood collection facilities that ship hepatitis B reactive products. Only a few firms are actually engaged in shipping hepatitis B reactive products and making the reports required by § 610.40. Also, there are very few to no emergency shipments per year related to further manufacturing and the only product currently shipped prior to completion of hepatitis B testing is a licensed product, Source Leukocytes. Shipments of Source Leukocytes are preapproved under the product license applications and do not require notification of shipment. Currently, there have been no respondents reporting emergency or preapproved shipments (§ 610.40(b)). However, FDA is listing one report per year for emergency or preapproved shipments to account for the possibility of future emergency shipments. The estimated number of respondents and total annual responses under § 610.40(d) are based on the annual average of reports submitted to FDA in 1999. The hours per response are based on past FDA experience.

In the **Federal Register** of September 7, 2000 (65 FR 54282), the agency requested comments on the proposed collection of information. No significant comments were received.

FDA estimates the burden of this collection of information as follows:

TABLE 1.—ESTIMATED ANNUAL REPORTING BURDEN [1]

21 CFR Section	No. of Respondents	Annual Frequency per Response	Total Annual Responses	Hours per Response	Total Hours
610.40(b) [2]	1	1	0.5	0.5	11
610.40(d) [3]	12	1.83	22	0.5	11.5

[1] There are no capital costs or operating and maintenance costs associated with this collection of information.

[2] The notice involves a brief letter and an enclosure. The letter identifies who is making the shipment, to whom shipped, the nature of the emergency, the kind and quantity shipped, and date of shipment. The enclosure is a copy of the shippers written standard operating procedures for handling, labeling storage, and shipment of contaminated (contagious) product. The burden for development and maintenance of standard operating procedures is approved under OMB Control No. 0910–0116.

[3] The notice of reactive product shipment is limited to information on: The identity of the kind and amount of source material shipped, the name and address of the consignee, the date of shipment, and the manner in which the source material is labeled.

FDA has calculated no additional burden in this information collection package for the labeling requirements in § 610.40(d) because the information and statements on the label necessary for public disclosure and safety are provided by FDA in these regulations. Under 5 CFR 1320.3(c)(2), the public disclosure of information originally supplied by the Federal Government to the recipient for the purpose of disclosure to the public is not a collection of information.

Dated: December 5, 2000.

Margaret M. Dotzel,

Associate Commissioner for Policy.

[FR Doc. 00–31481 Filed 12–8–00; 8:45 am]

BILLING CODE 4160–01–F

DEPARTMENT OF HEALTH AND HUMAN SERVICES

Substance Abuse and Mental Health Services Administration (SAMHSA)

Notice of Meetings

Pursuant to Public Law 92–463, notice is hereby given of the following meetings of SAMHSA Special Emphasis Panels I in December 2000.

A summary of the meetings and a roster of the members may be obtained from: Ms. Coral Sweeney, Review Specialist, SAMHSA, Office of Policy and Program Coordination, Division of Extramural Activities, Policy, and Review, 5600 Fishers Lane, Room 17–89, Rockville, Maryland 20857. Telephone: 301–443–2998.

Substantive program information may be obtained from the individual named as Contact for the meeting listed below.

The meetings will include the review, discussion and evaluation of individual grant applications. These discussions could reveal personal information concerning individuals associated with the applications. Accordingly, these meetings are concerned with matters exempt from mandatory disclosure in Title 5 U.S.C. 552b© (6) and 5 U.S.C. App.2, § 10(d).

Committee Name: SAMHSA Special Emphasis Panel I (SEP I).

Meeting Date: December 11–15, 2000.

Place: Bethesda Marriott, 5151 Pooks Hill Road, Bethesda, MD 20814.

Closed: December 11, 2000 to Adjournment.

Panel: Community Action Grants, PA 00–003 2 Committees.

Contact: Diane McMenamin, Director, Division of Extramural Activities, Policy and Review, Parklawn Building, 5600 Fishers Lane, Room 1789, Rockville, Maryland 20857.

This notice is being published less than 15 days prior to the meeting due to the urgent need to meet timing limitations imposed by the review and funding cycle.

Dated: November 27, 2000.

Coral Sweeney,

Review Specialist, Substance Abuse and Mental Health Services Administration.

[FR Doc. 00–31409 Filed 12–8–00; 8:45 am]

BILLING CODE 4162–20–U

DEPARTMENT OF THE INTERIOR

Consideration of the Accuracy of the Eastern Boundary of the Sandia Pueblo Grant and Request for Additional Information

AGENCY: Office of the Solicitor, Interior.

ACTION: Notice and request for further information.

SUMMARY: The U.S. Department of the Interior announces that it will be considering the accuracy of the eastern boundary of the Sandia Pueblo Grant to determine whether to conduct a resurvey of the boundary. The Department received a request dated November 21, 2000, from an attorney representing the County of Bernalillo and the Sandia Mountain Coalition, for a resurvey to correct the eastern boundary of the Sandia Pueblo Grant. Counsel for the County and the Coalition suggests that his request be combined with consideration of the Pueblo of Sandia's request for a resurvey, which is the subject of a remand from the U.S. District Court in *Pueblo of Sandia* v. *Babbitt* as a result of a November 17, 2000, decision of the U.S. Court of Appeals for the D.C. Circuit, dismissing the appeals from the July 18, 1998, ruling of the District Court. The Department also has a letter and legal memorandum from an attorney representing the Pueblo of Sandia, dated November 30, 2000, requesting that the boundary be corrected.

The subject of the eastern boundary of the Pueblo of Sandia has been a matter of concern and debate in the Department of the Interior for many years. In 1988, then-Solicitor Ralph Tarr issued an opinion rejecting the Pueblo's petition for a resurvey. This decision was vacated by a decision of the U.S. District Court in 1998. A substantial record has been accumulated over the years in the consideration of the boundary issue, but the Department is giving interested parties an opportunity to provide any further historical evidence or legal arguments that may be pertinent to this matter.

DATES: Interested parties may submit additional historical evidence or legal analysis to the address below on or before January 5, 2001.

ADDRESSES: Submit all information requested in this notice to: Angela M. Kelsey, Office of the Solicitor, U.S. Department of the Interior, 1849 C Street, NW., Mailstop 6456, Washington, DC 20240.

FOR FURTHER INFORMATION CONTACT: Suzanne R. Schaeffer, Assistant Solicitor for Environment, Land & Minerals, Division of Indian Affairs, Office of the Solicitor, U.S. Department of the Interior, 1849 C Street, NW., Mailstop 6456, Washington, DC 20240. Telephone: 202–208–4361.

SUPPLEMENTARY INFORMATION: In 1983, the Pueblo of Sandia petitioned the Department of the Interior for a corrected survey designating the eastern boundary of its land grant as the ''main ridge'' of the Sandia Mountains, located northeast of Albuquerque, NM. The Pueblo claimed that an 1859 survey commissioned by the government erroneously set the Pueblo's eastern boundary at the base of the Sandia Mountains rather than along the Mountain's crest line, as allegedly set forth in the Pueblo's 1748 Spanish land grant confirmed by the United States Congress in 1858. In 1988 the Department rejected the Pueblo's claim, concluding that the original land survey accurately set the Pueblo's eastern boundary at the foothills of the Mountains. In the Solicitor's Opinion on the Pueblo of Sandia Boundary, 96 I.D. 331 (1988), then-Solicitor Tarr reasoned that the King of Spain, who originally granted the land to the Pueblo, intended to grant it a ''formal'' pueblo only, not the larger area claimed. A formal pueblo consists of four square leagues of land, the area within the extension of one league (2.6 miles) measured from the center of the settlement to the north, south, east and west.

The Pueblo sued the Secretary of the Interior and the Secretary of Agriculture, seeking a judgment designating the main ridge of the Sandia Mountains as the Pueblo's eastern boundary and directing the Secretary of the Interior to correct the 1859 survey. The Secretary of Agriculture was included in the suit because the Pueblo claims that the incorrect survey boundary excludes approximately 10,000 acres of land which is administered as part of the Cibola National Forest and the Sandia Mountain Wilderness. The District Court allowed the Sandia Mountain Coalition, a coalition of homeowners and others in the affected region, and the County of Bernalillo to intervene in the case. *See Pueblo of Sandia* v. *Babbitt,* 1996 U.S. Dist. LEXIS 20619 (D.D.C.). The court reviewed the Department of Interior's actions under the Administrative Procedure Act, and on July 18, 1998, found them to be arbitrary and capricious. The court vacated the Solicitor's Opinion and remanded the case to the Department of the Interior for action consistent with the court's opinion.

The intervenors, the County of Bernalillo and the Sandia Mountain Coalition, appealed from the court's decision, and the United States also filed a protective notice of appeal to the U.S. Court of Appeals for the D.C. Circuit. The D.C. Circuit granted the parties' joint motion to hold the proceedings in abeyance pending settlement negotiations. The Pueblo, the federal agencies, the County of Bernalillo, the Sandia Mountain Coalition, the Sandia Peak Tram Company, and the City of Albuquerque then entered into negotiations with a private mediator. The County, the Coalition, and the City withdrew from mediation in August 1999. Nevertheless, the continuing negotiations among the government, the Pueblo, and the Tram Company resulted in a settlement, which was submitted to the New Mexico Congressional delegation. This settlement requires an Act of Congress to become effective. The United States then filed a motion to dismiss the appeals, and the Court of Appeals issued its decision granting the motion and dismissing the appeals on November 17, 2000. *See Pueblo of Sandia* v. *Babbitt,* 2000 U.S. App. LEXIS 29339 (D.C. Cir.).

Part IV of the 1988 Tarr Opinion concluded that the Department had no authority to correct the boundaries of Indian reservations. On December 5, 2000, the Solicitor issued an opinion regarding the Secretary's authority to correct the boundary between the San Felipe Pueblo Grant and the El Ranchito Grant owned by the Pueblo of Santa Ana, which overrules Part IV of the Tarr Opinion. The Department has made no new decision on the eastern boundary of the Sandia Pueblo Grant, but intends to reconsider its earlier decision.

Counsel for both the Pueblo and the County of Bernalillo and Sandia Mountain Coalition have since submitted requests to the Department, asking that it correct the eastern boundary of the Sandia Pueblo. It continues to be the position of the Pueblo that approximately 10,000 acres of National Forest was wrongfully excluded from its Spanish Land Grant lands. In his letter, counsel for the Pueblo asserts that when Congress confirmed the Spanish Land Grant in 1858, it did so in reliance on an 1856 Report of the Surveyor General identifying the eastern boundary of the Sandia Pueblo Land Grant as ''the main ridge called Sandia.'' The letter from counsel for the County and the Coalition attaches a report prepared for the U.S. Forest Service by Dr. Stanley M. Hordes, dated March 1, 1996, which, counsel asserts, establishes that there were

errors in the translation of the Land Grant and in the monumenting of the survey, and that the eastern boundary of the Pueblo, as currently recognized by federal agencies and others in maps of the area, is erroneous.

In light of these requests, and consistent with the court's remand order, the Department has decided to reevaluate its earlier decision regarding the Sandia boundary. The Department has accumulated a substantial amount of information over the years related to its consideration of these boundary issues, but is soliciting interested parties to provide any additional historical evidence or legal arguments related to these matters. The Department notes that its reconsideration of the Sandia boundary matters will necessarily not affect the title to any land held by private landowners in the area. The Secretary's resurvey authority is expressly limited by statute so that it may not be used to impair the rights and titles of good faith purchasers of public lands who may otherwise be affected by the resurvey. *See Cragin* v. *Powell,* 128 U.S. 691 (1888), *see also* 43 U.S.C. 772.

(Authority: 25 U.S.C. 176; 43 U.S.C. 772.)

Dated: December 5, 2000.

John Leshy,

Solicitor.

[FR Doc. 00–31365 Filed 12–8–00; 8:45 am]

BILLING CODE 4310–17–P

DEPARTMENT OF THE INTERIOR

Notice of Intent To Discontinue Preparation of an Environmental Assessment for the Conversion of a Portion of Strawberry Valley Project Water from Irrigation to Municipal and Industrial Use

AGENCY: Office of the Assistant Secretary—Water and Science, Department of the Interior.

ACTION: Notice of intent to discontinue preparation of an Environmental Assessment for the conversion of a portion of Strawberry Valley Project (SVP) water from irrigation to other beneficial uses including municipal and industrial (M&I) use.

SUMMARY: Recent discussions among the Department, Strawberry Water Users Association, and the South Utah Valley Municipal Water Association have resulted in a decision to terminate work on contracts to convert Strawberry Valley Project water from agricultural to municipal and industrial use. The Department has discontinued preparation of an Environmental Assessment intended to allow the conversion of SVP water from agricultural to municipal and industrial use. The Environmental Assessment was being prepared pursuant to the National Environmental Policy Act of 1969, and in accordance with a **Federal Register** notice published February 7, 2000, (Page 5880, Volume 65, Number 25).

The SUVMWA have determined to use alternate sources for municipal and industrial water instead of SVP water. The SWUA have determined to discontinue negotiations with the Department relative to the conversion of SVP water. As a result SVP water will continue to be used only for agricultural purposes and will only be available during the irrigation season.

FOR FURTHER INFORMATION CONTACT: Additional information on matters related to this Federal Register notice can be obtained at the address and telephone number set forth below: Mr. Reed Murray, CUP Completion Act Office, Department of the Interior, 302 East 1860 South, Provo UT 84606–6154, (801) 379–1237, rmurray@uc.usbr.gov.

Dated: December 1, 2000.

Ronald Johnston,

CUP Program Director, Department of the Interior.

[FR Doc. 00–31461 Filed 12–8–00; 8:45 am]

BILLING CODE 4310–RK–P

DEPARTMENT OF THE INTERIOR

Geological Survey

Request for Public Comments on Extension of Existing Information Collection To Be Submitted to OMB for Review Under the Paperwork Reduction Act

A request extending the information collection described below will be submitted to the Office of Management and Budget (OMB) for approval under the provisions of the Paperwork Reduction Act of 1995 (44 U.S.C. 3506(c)(2)). Copies of the proposed collection may be obtained by contacting the Bureau's clearance officer at the phone number listed below. Comments on the proposal should be made within 60 days to the Bureau Clearance Officer, U.S. Geological Survey, 807 National Center, Reston, VA 20192.

As required by OMB regulations at 5 CFR 1320.8(d)(1), the U.S. Geological Survey solicits specific public comments as to: 1. Whether the collection of information is necessary for the proper performance of the functions of the bureaus, including whether the information will have practical utility; 2. The accuracy of the bureau's estimate of the burden of the collection of information, including the validity of the methodology and assumptions used:

3. The quality, utility, and clarity of the information to be collected; and

4. How to minimize the burden of the collection of information on those who are to respond, including the use of appropriate automated, electronic, mechanical, or other forms of information technology.

Title: North American Reporting Center for Amphibian Malformations.

OMB Approval No: 1028–0056.

Summary: The collection of information referred herein applies to a World-Wide Web site that permits individuals who observed malformed amphibians or who inspect substantial numbers of normal or malformed amphibians to report those observations and related information. The Web site is termed the North American Reporting Center for Amphibian Malformations. Information will be used by scientists and federal, state, and local agencies to identify areas where malformed amphibians occur and the rates of occurrence.

Estimated Completion Time: 20 minutes.

Estimated Annual Number of Respondents: 900.

Frequency: Once.

Estimated Annual Burden Hours: 300 hours.

Affected Public: Primarily U.S. and Canadian residents.

For Further Information Contact: To obtain copies of the survey, contact the Bureau clearance officer, U.S. Geological Survey, 807 National Center, 12201 Sunrise Valley Drive, Reston, Virginia, 20192, telephone (703) 648–7313, or go to the Website (http://www.npsc.nbs.gov./narcam).

Dated: December 5, 2000.

Dennis B. Fenn,

Chief Biologist.

[FR Doc. 00–31484 Filed 12–8–00; 8:45 am]

BILLING CODE 4310–Y7–M

DEPARTMENT OF THE INTERIOR

Bureau of Land Management

[WO–350–1430–PF–01–21 1A]

Extension of Approved Information Collection, OMB Number 1004–0009

AGENCY: Bureau of Land Management, Interior.

ACTION: Notice and request for comments.

SUMMARY: In accordance with the Paperwork Reduction Act of 1995, the

Bureau of Land Management (BLM) is announcing its intention to request extension of an existing approval to collect certain information from applicants who wish to acquire a Land Use Authorization (Form 2920–1) on public lands under the Federal Land Policy and Management Act (FLPMA) of 1976. The regulations at 43 CFR 2920 provide for non-Federal use of bureau administered land via lease or permit. Uses include agriculture, trade, or manufacturing concerns and business uses such as outdoor recreation concession. BLM will determine the validity of uses proposed by private individuals and other qualified proponents from information provided by the proponent on the Land Use Application and Permit Form.

DATES: You must submit your comments to BLM at the appropriate address below on or before February 9, 2001. BLM will not necessarily consider any comments received after the above date.

ADDRESSES: Comments may be mailed to: Regulatory Affairs Group (630), Bureau of Land Management, 1849 C Street NW, Room 401LS, Washington, DC 20240.

Comments may be sent via Internet to: *WOComment@blm.gov.* Please include ''ATTN: 1004–0009'' and your name and return address in your Internet message.

Comments may be hand-delivered to the Bureau of Land Management, Administrative Record, Room 401, 1620 L Street, NW, Washington, DC.

Comments will be available for public review that the L Street address during regular business hours (7:45 a.m. to 4:15 p.m.), Monday through Friday.

FOR FURTHER INFORMATION CONTACT: Alzata L. Ransom, Realty Use Group, on (202) 452–7772 (Commercial or FTS). Persons who use a telecommunications device for the deaf (TDD) may call the Federal Information Relay Service (FIRS) at 1–800–8330, 24 hours a day, seven days a week, to contact Ms. Ransom.

SUPPLEMENTARY INFORMATION: 5 CFR 1320.12(a) requires BLM to provide 60-day notice in the **Federal Register** concerning a collection of information contained in regulations found in 43 CFR 2920 to solicit comments on (a) whether the proposed collection of information is necessary for the proper performance of the functions of the agency, including whether the information will have practical utility; (b) the accuracy of the agency's estimate of the burden of the proposed collection of information, including the validity of the methodology and assumptions used; (c) ways to enhance the quality, utility, and clarity of the information to be collected; and (d) ways to minimize the burden of the collection of information on those who are to respond, including through the use of appropriate automated, electronic, mechanical, or other technological collection techniques or other forms of information technology. BLM will receive and analyze any comments sent in response to this notice and include them with its request for approval from the Office of Management and Budget under 44 U.S.C. 3501 *et seq.* The FLPMA of 1976 (43 U.S.C. 1732, 1740), provides for issuance of land use authorization which may include leases or permits, to eligible proponents. The BLM has implemented the provisions of this requirement through the issuance of 43 CFR 2922.2–1 which provides for the submission of the ''Land Use Application and Permit,'' or application, Form 2920–1. BLM uses the information collected on the application to identify the proposed land use and activities, describe all facilities for which authorization is sought, to identify the location, to determine a schedule for construction and to identify access requirements. Since the information collected is unique to each application, no other suitable means of information collection has been identified which could gather the information at a lesser burden. If the BLM fails to properly collect the required information, the BLM will reject the application. Based on BLM's experience administering the activities described above, we receive approximately 620 applications (577 Permits, 43 Leases) annually. It takes an average of 30 minutes for over 94 percent of the applicants to supply the needed information. For the other 6 percent of the applicants who are applying for leases, the average burden is 121 hours to supply the necessary information. The range in burden hours is due to the fact that a lease application, because of its nature, requires more time on the part of an applicant to supply the needed information. For example, a lease application to construct a multi-million dollar ski facility could involve construction drawings, site and facility plans, other Federal and State licenses and permits, and other pre-authorizing requirements involving many days to process. Conversely, a relatively routine application (permit) to use public lands for agricultural purposes could be processes in 30 minutes. The estimated total annual burden on new respondents is about 5,955 hours.

BLM will summarize all responses to this notice and include them in the request for Office of Management and Budget approval. All comments will also become a matter of public record.

Dated: December 5, 2000.

Michael Schwartz,

BLM Information Collection Clearance Officer.

[FR Doc. 00–31362 Filed 12–8–00; 8:45 am]

BILLING CODE 4310–84–M

DEPARTMENT OF THE INTERIOR

Bureau of Land Management

[NV–960–1060–PF–01–24 1A]

Extension of Approved Information Collection, OMB Number 1004–0042

AGENCY: Bureau of Land Management, Interior.

ACTION: Notice and request for comments.

SUMMARY: In accordance with the Paperwork Reduction Act of 1995, the Bureau of Land Management (BLM) is announcing its intention to request extension of an existing approval to collect certain information from those individuals requesting to adopt a wild horse or burro (43 CFR 4750). BLM needs this information to determine whether or not individuals are qualified to provide humane care and proper treatment, including transportation, feeding and handling, to an adopted wild horse or burro.

DATES: You must submit your comments to BLM at the appropriate address below on or before February 9, 2001. BLM will not necessarily consider any comments received after the above date.

ADDRESSES: Comments may be mailed to: Regulatory Affairs Group (630), Bureau of Land Management, 1849 C Street NW, Room 401LS, Washington, DC 20240.

Comments may be sent via Internet to: *WOComment@blm.gov.* Please include ''ATTN: 1004–0042'' and your name and return address in your Internet message.

Comments may be hand-delivered to the Bureau of Land Management, Administrative Record, Room 401, 1620 L Street, NW., Washington, DC.

Comments will be available for public review at the L Street address during regular business hours (7:45 a.m. to 4:15 p.m.), Monday through Friday.

FOR FURTHER INFORMATION CONTACT: Bea Wade, on (775) 861–6583 (Commercial or FTS). Persons who use a telecommunications device for the deaf (TDD) may call the Federal Information Relay Service (FIRS) at 1–800–877–

8330, 24 hours a day, seven days a week, to contact Ms. Wade.

SUPPLEMENTARY INFORMATION: 5 CFR 1320.12(a) requires BLM to provide 60-day notice in the **Federal Register** concerning a collection of information contained in regulations found in 43 CFR 4750 to solicit comments on (a) whether the proposed collection of information is necessary for the proper performance of the functions of the agency, including whether the information will have practical utility; (b) the accuracy of the agency's estimate of the burden of the proposed collection of information, including the validity of the methodology and assumptions used; (c) ways to enhance the quality, utility, and clarity of the information to be collected; and (d) ways to minimize the burden of the collection of information on those who are to respond, including through the use of appropriate automated, electronic, mechanical, or other technological collection techniques or other forms of information technology. BLM will receive and analyze any comments sent in response to this notice and include them with its request for approval from the Office of Management and Budget under 44 U.S.C. 3501 *et seq.*

Section 3(b)(2)(B) of the Wild Free-Roaming Horse and Burro Act requires that BLM provide health excess animals for adoption by individuals that the Secretary determines are qualified to provide humane care and proper treatment. The implementing regulations are found at 43 CFR Subpart 4750—Private Maintenance. Individuals must inform BLM of their interest and willingness to adopt. The adoption application requirement provides individuals with a mechanism to inform BLM of their interest and to submit their credentials for determining their qualifications. The Application for Adoption of Wild Horse(s) and Burro(s), Form 4710–10, is required by 43 CFR 4750.3.

BLM uses the information to determine whether individuals are qualified to provide humane care and proper treatment to one or more adopted animals. When BLM approves the application and the individual completes a Private Maintenance and Care Agreement, the individual may adopt one to four wild horses or burros at one time. There is no other source for the required information, and failure to furnish the required information will result in the applicant's not being able to adopt a wild horse or burro.

The collection of information is short and simple and not inconvenient to the applicant. Valuable dialogue normally occurs during the approval process when BLM conducts an interview with the applicant to ensure that the applicant understands the obligations and prohibited acts and that the adopter is knowledgeable about horses and burros or has access to assistance from a knowledgeable individual. Based on BLM's experience in administering the activities described above, the public reporting burden is estimated at 10 minutes per response. The estimate number of respondents is 30,000 per year, for a total estimated burden of 5,000 hours to read the instructions, gather and supply the information and send the applications to BLM.

BLM will summarize all responses to this notice and include them in the request for Office of Management and Budget approval. All comments will also become a matter of public record.

Dated: December 5, 2000.

Michael Schwartz,

BLM Information Collection Clearance Officer.

[FR Doc. 00–31363 Filed 12–8–00; 8:45 am]

BILLING CODE 4310–84–M

DEPARTMENT OF THE INTERIOR

Bureau of Land Management

[WO–350–1430–PF–01–241A]

Extension of Approved Information Collection, OMB Number 1004–0107

AGENCY: Bureau of Land Management, Interior.

ACTION: Notice and request for comments.

SUMMARY: In accordance with the Paperwork Reduction Act of 1995, the Bureau of Land Management (BLM) is announcing its intention to request extension of an existing approval to collect certain information from respondents identified in 43 CFR 2800 and 2880. This information is in addition to that collected on the Form SF–299, OMB No. 1004–0189, and is necessary for those large complex projects which require a right-of-way. On the multi-million dollar energy production and transmission projects, and complex communication sites for which a right-of-way is required, BLM needs information over and above that provided on the application form, such as construction and other plans; a more detailed map; specific certificates; permits and approvals from other agencies; and any other necessary information relative to the completion of the project.

DATES: You must submit your comments to BLM at the appropriate address below on or before February 9, 2001. BLM will not necessarily consider any comments received after the above date.

ADDRESSES: Comments may be mailed to: Regulatory Affairs Group (630), Bureau of Land Management, 1849 C Street NW, Room 401LS, Washington, DC 20240.

Comments may be sent via Internet to: *WOComments@blm.gov.* Please include ''ATTN: 1004–0107'' and your name and return address in your Internet message.

Comments may be hand-delivered to the Bureau of Land Management, Administrative Record, Room 401, 1620 L Street, NW, Washington, DC.

Comments will be available for public review at the L Street address during regular business hours (7:45 a.m. to 4:15 p.m.) Monday through Friday.

FOR FURTHER INFORMATION CONTACT: Alzata L. Ransom, Realty Use Group, on (202) 452–7772 (Commercial or FTS). Persons who use a telecommunications device for the deaf (TDD) may call the Federal Information Relay Service (FIRS) at 1–800–877–8330, 24 hours a day, seven days a week, to contact Ms. Ransom.

SUPPLEMENTARY INFORMATION: 5 CFR 1320.12(a) requires BLM to provide a 60-day notice in the **Federal Register** concerning a collection of information contained in regulations found in 43 CFR 2800 and 2880 to solicit comments on (a) whether the proposed collection of information is necessary for the proper performance of the functions of the agency, including whether the information will have practical utility; (b) the accuracy of the agency's estimate of the burden of the proposed collection of information, including the validity of the methodology and assumptions used; (c) ways to enhance the quality, utility, and clarity of the information to be collected; and (d) ways to minimize the burden of the collection of information on those who are to respond, including through the use of appropriate automated, electronic, mechanical, or other technological collection techniques or other forms of information technology. BLM will receive and analyze any comments sent in response to this notice and include them with its request for approval from the Office of Management and Budget under 44 U.S.C. 3501 *et seq.* BLM grants rights-of-way on public lands through the authority of Title V of the FLPMA, 90 Stat. 2776, 43 U.S.C. 1761 and the Mineral Leasing Act (MLA) of 1920, as amended, 30 U.S.C. 185. Information in addition to that collected on the right-of-way form (SF–299) is needed for large complex projects. There is no standard

form for the collection of this required additional information. The information required in 43 CFR Parts 2800 and 2880 is needed to enable the BLM to determine whether or not a right-of-way may be granted, establish the terms and conditions of the grant and administer the grant when made. Additional information in the form of construction and other plans; detailed maps; certification, permits and approvals required by other agencies; and other information necessary for the completion of the project are authorized by 43 CFR 2802.4, 2881.2, and 2882.3. Each right-of-way is an individual situation and the information collected is specific to that individual proposal and only available from the applicant. BLM may require additional information in the form of a plan. This plan is a product of the NEPA requirements. It is a useful working tool that enables both the BLM and the applicant to have a common understanding on how the project will proceed. BLM may also require an as-built map. These maps show greater detail than the basic location map required to be submitted with the application. A more exact location of the holder's right-of-way and related facilities will give the holder more protection for their improvements. The BLM also requires assurances that certifications, permits, and approvals required by others and identified during the NEPA analysis process have been obtained. BLM may require a detailed description of alternative routes the applicant considered when developing the proposal. BLM uses such information to gain insight into the complexities and conflicts of the proposals. BLM may request statements of need and economic feasibility and of the environmental, social, and economic effects of the proposal to assist us in evaluating the proposal with respect to NEPA compliance. If the BLM fails to properly collect the required information including plans, construction schedules, maps specific certificates, permits, and approvals necessary for the completion of the project, the BLM will reject the right-of-way application.

Based on BLM's experience administering the activities described above, approximately 25 percent of the 4,000 applications the BLM receives annually require additional information collection. The applicants are usually large companies that seek to construct large complex projects on public lands which require a right-of-way. The public reporting burden for the information collected is estimated to average 16.8 hours per response. The frequency of response is once. The estimated total annual burden on new respondents is about 16,800 hours. BLM will summarize all responses to this notice and include them in the request for Office of Management and Budget approval. All comments will also become a matter of public record.

Dated: December 5, 2000.

Michael Schwartz,

BLM Information Collection Clearance Officer.

[FR Doc. 00–31364 Filed 12–8–00; 8:45 am]

BILLING CODE 4310–84–M

DEPARTMENT OF THE INTERIOR

Bureau of Land Management

[AK–040–1410–01; AA–82263]

Realty Action: FLPMA Sec. 302 Lease, Iliamna Lake

AGENCY: Bureau of Land Management, Interior.

ACTION: Notice of Realty Action, Lease of Public Land.

SUMMARY: Mr. Ted J. Forsi has submitted an application to lease public land. The lease is to be used in conjunction with an existing Special Recreation Permit (SRP). He has held the SRP since 1992. The Permit allows him to guide hunting and fishing clients. He requests to convert the following tent structures into cabins at his existing camp:

(1) 24′ x 24′ Lodge/Cabin
(2) 14′ x 16′ Cabin
(3) 10′ x 12′ Cabin
(4) 10′ x 12′ Cabin

The proposed lease is located approximately 10 miles northwest of Iliamna Lake and is described as:

Seward Meridian, Alaska

T. 7 S., R. 40 W., Sec. 17

Containing approximately 2 acres, more or less.

The State of Alaska has selected the land for conveyance and the applicant must obtain their concurrence.

The land has been examined and found suitable for lease under the provisions of Section 302 of the Federal Land Policy Act and 43 CFR Part 2920.

The lessee shall reimburse the United States for reasonable administrative fees and monitoring of construction, operation, maintenance, and rehabilitation of the land authorized. The reimbursement of costs shall be in accordance with the provisions of 43 CFR 2920.6.

The lease will be offered for a term of 10 years and will require the lessee to pay rent at no less than fair market value.

Detailed information concerning this action is available for review at the office of the Bureau of Land Management, Anchorage Field Office, 6881 Abbott Loop Road, Anchorage, Alaska, 99507–2599.

DATES: Interested parties may submit comments on or before January 25, 2001 to the Field Manager, Anchorage Field Office, 6881 Abbott Loop Road, Anchorage, Alaska 99507–2599. In the absence of a timely objection, this proposed Realty Action will become final.

FOR FURTHER INFORMATION CONTACT: Shirley Rackley, Anchorage Field Office, Bureau of Land Management, 6881 Abbott Loop Road, Anchorage, Alaska 99507–2599; (907) 267–1289 or toll free (1–800) 478–1263.

Dated: November 28, 2000.

Stuart Hirsh,

Field Manager (Acting).

[FR Doc. 00–31460 Filed 12–8–00; 8:45 am]

BILLING CODE 4310–JA–P

DEPARTMENT OF THE INTERIOR

Bureau of Land Management

[NV–930–1430–EQ; N–73883]

Notice of Realty Action: Commercial Lease of Public Lands

AGENCY: Bureau of Land Management.

ACTION: Commercial lease.

SUMMARY: The Notice of Realty Action involves a long term lease of public lands administered by the Bureau of Land management in Clark County, Nevada. The lease is intended to authorize Buffalo Westcliff Ltd. Partnership (N–73883) to utilize the land for a public parking lot, in conjunction with their private land, and subject to a right-of-way granted to Nevada Power Company (N–51943).

The land has been examined and found suitable for Commercial Leasing under (43 U.S.C. 2920). The legal description of the site is as follows:

Mount Diablo Meridian, Nevada

T. 20 S., R. 60 E.,
Sec.28,S½NE¼SE¼.

Containing .69 acres, more or less, located at Buffalo and the south side of Summerlin Parkway.

The site will be leased on a non-competitive basis. More detailed information is available for review at the Las Vegas Field Office, Bureau of land Management, 4765 Vegas Drive, Las Vegas, Nevada 89108. Contact Naomi Hatch at 702/647–5084.

Reimbursement of costs shall be in accordance with the provisions of 43 CFR 2920.6.

For a period of 45 days from the date of publication of this notice in the **Federal Register**, interested parties may submit comments to the Assistant Field Manager, Division of Lands, Las Vegas Field Office, 4765 Vegas Drive, Las Vegas, Nevada 89108. Any adverse comments will be evaluated by the Assistant Field Manager, Division of Lands who may vacate or modify this Realty Action and issue a final determination. In the absence of any action by the Assistant Field Manager, Division of Lands, this Realty Action will become the final determination of the Bureau.

Dated: November 22, 2000.

Cheryl A. Ruffridge,

Acting Assistant Field Manager, Division of Lands, Las Vegas, Nevada.

[FR Doc. 00–31370 Filed 12–8–00; 8:45 am]

BILLING CODE 4310–HC–P

DEPARTMENT OF THE INTERIOR

National Park Service

National Register of Historic Places; Notification of Pending Nominations

Nominations for the following properties being considered for listing in the National Register were received by the National Park Service before December 2, 2000. Pursuant to section 60.13 of 36 CFR Part 60 written comments concerning the significance of these properties under the National Register criteria for evaluation may be forwarded to the National Register, National Park Service, 1849 C St. NW, NC400, Washington, DC 20240. Written comments should be submitted by December 26, 2000.

Paul R. Lusignan,

Acting Keeper of the National Register.

ARIZONA

Gila County:
- Bullion Plaza School, 1000 Plaza Ave., Miami, 00001591

ARKANSAS

Cleburne County:
- Woodrow Store, (Arkansas Highway History and Architecture MPS), AR 263, Woodrow, 00001592

FLORIDA

Polk County:
- Brown, Lawrence, House, (Bartow MPS), 470 Second Ave., Bartow, 00001594

KENTUCKY

Henderson County:
- Barret—Keach Farm, 1586 KY 136 W, Henderson, 00001596
- Jackson—Ijames Farm, Address Restricted, Henderson, 00001593
- Soaper, William, Farm, 2323 Zion Rd., Henderson, 00001595

Kenton County:
- Linden Grove Cemetery, 1421 Holman Ave., Covington, 00001600
- Ritte's Corner Historic District, Latonia (Boundary Increase), Approx. 3424–3601 Decoursey Ave., 9 E. Southern Ave. and CSX Railroad Property, Covington, 00001598

Letcher County:
- Caudill, C.B., Store, 7822 KY 7 S, Blackey, 00001597

Madison County:
- Miller, William M., Far, (Boundary Increase), 1099 Parrish Rd., Richmond, 00001599

Oldham County:
- Waldeck Farm, 5900 W KY 22, Crestwood, 00001618

Owen County:
- New Liberty Historic District, KY 227, roughly bet. KY 978 and KY 36, New Liberty, 00001601

MARYLAND

St. Mary's County:
- U–1105 BLACK Panther (Type VIIC German Submarine), Potomac River, Piney Point, 00001602

MICHIGAN

Charlevoix County:
- Horton Bary School, 04991 Boyne City-Charlevoix Rd., Bay Township, 00001603

Marquette County:
- Suicide Hill (Ski Jump), Cliffs Dr., Neguanee, 00001604

MINNESOTA

Nicollet County:
- St. Peter Commercial Historic District, Minnesota Ave. Bet. Broadway and Grace Sts., St. Peter, 00001610

MISSOURI

Clay County:
- Arthur-Leonard Historic District, (Liberty, Clay County, Missouri MPS AD), Roughly bounded by Ford Ave., Jewell St., Choctaw St., and Missouri St., Liberty, 00001608
- Clardy Heights Historic District, (Liberty, Clay County, Missouri MPS AD), 716, 736 and 758 W. Liberty Dr., Liberty, 00001609
- Dougherty-Prospect Heights Historic District, (Liberty, Clay County, Missouri MPS AD), Roughly bounded by Mississippi St., Gallatin St., Schrader St., and Fairview Ave., Liberty, 00001605
- Garrison School Historic District, (Liberty, Clay County, Missouri MPS AD), Roughly along N. Main St. and N. Water St., Liberty, 00001607
- Jewell—Lightburne Historic District, (Liberty, Clay County, Missouri MPS AD), Roughly bounded by N. Jewell St., E. Mill St., Main St. and Gordon St., Libery, 00001606

MONTANA

Gallatin County:
- Lundwall, Charles, Building, 123–125 W. Main St., Bozeman, 00001611

Rosebud County:
- Wolf Mountains Battlefield, Address Restricted, Birney, 00001617

NEW YORK

Westchester County:
- St. Luke's Episcopal Church, 68 Bedford Rd., Katonah, Town of Bedford, 00001612

NORTH CAROLINA

Edgecombe County:
- Princeville School, US 258, 0.3 mi. E of NC 64, Princeville, 00001615

Henderson County:
- Moore, Arthur W., House, 299 Sunset Dr., Horse Shoe, 00001613

McDowell County:
- Ledbetter, Albertus, House, 125 Haynes Rd., Montford Cove, 00001616

Northampton County:
- Church of the Saviour and Cemetery, Jct. of Church and Calhoun Sts., Jackson, 00001614

[FR Doc. 00–31476 Filed 12–8–00; 8:45 am]

BILLING CODE 4310–70–P

DEPARTMENT OF THE INTERIOR

Bureau of Reclamation

[INT–DES–00–53]

Keechelus Dam Safety of Dams Modification, Yakima Project, Washington

AGENCY: Bureau of Reclamation, Interior.

ACTION: Notice of availability and notice of public hearings for the Keechelus Dam Safety of Dams Modification, Yakima Project, Washington, draft environmental impact statement.

SUMMARY: Pursuant to section 102(2)(C) of the National Environmental Policy Act of 1969, as amended, the Department of the Interior, Bureau of Reclamation (Reclamation), has prepared a draft environmental impact statement (Draft EIS) to examine the

impacts of alternatives to correct safety deficiencies identified at Keechelus Dam. Reclamation proposes to modify the existing dam to return full capacity to Keechelus Lake.

The preferred alternative of modifying the dam would provide for the safe operation of Keechelus Dam and also maintain benefits from Keechelus Lake that include meeting existing contractual commitments for storage space for irrigators within the Yakima Project and controlling seasonal downstream flooding.

The DEIS describes and analyzes the impacts of four alternatives that would correct safety deficiencies at Keechelus Dam, as well as the No Action Alternative. This Draft EIS assesses the impacts of the interim restriction, implemented in November 1998 to protect public safety, as the No Action Alternative.

DATES: Written comments on the Draft EIS must be received no later than February 9, 2001, at the address listed in **ADDRESSES** section below.

On Thursday, January 18, 2001, two public hearings will be held to accept oral comments on the Draft EIS in Ellensburg, Washington. Each public hearing will be proceeded by an informal open house where exhibits can be viewed and discussed with agency managers and staff. The first will begin with an informal open house from 12:30 to 2 p.m., followed by the formal public hearing from 2 to 4:00 p.m. The second will begin with a 5:30 to 7 p.m. informal open house, followed by a formal public hearing from 7 to 9 p.m. The facilities are physically accessible to people with disabilities.

Please contact Mr. Kaumheimer (see below) for sign language interpretation for the hearing impaired or other auxiliary aids by January 10, 2001, so arrangements can be made.

ADDRESSES: The open houses and public hearings will be held at the Ellensburg Inn, 1700 Canyon Road, Ellensburg, Washington, telephone (509) 925–9801.

Written comments on the Draft EIS should be submitted to Mr. Dave Kaumheimer, UCA–1600, Bureau of Reclamation, Upper Columbia Area Office, 1917 Marsh Road, Yakima, WA 98901; or by fax (509) 454–5611.

Our practice is to make comments, including names and home addresses of respondents, available for public review. Individual respondents may request that we withhold their home address from public disclosure, which we will honor to the extent allowable by law. If you wish us to withhold your name and/or address, you must state this prominently at the beginning of your comment. We will make all submissions from organizations or businesses, and from individuals identifying themselves as representatives or officials of organizations or businesses, available for public disclosure in their entirety.

See **SUPPLEMENTARY INFORMATION** section for locations where copies of the DEIS are available for public review and inspection.

FOR FURTHER INFORMATION CONTACT: Mr. Dave Kaumheimer at (509) 575–5848, extension 232. Those wishing to obtain a copy of the Draft EIS in the form of a printed document or on compact disk (CD–ROM with reader included) or a Summary of the Draft EIS may contact Mr. Kaumheimer.

SUPPLEMENTARY INFORMATION: Keechelus Dam was completed in 1917 as part of Reclamation's Yakima Project, storing Yakima River water in central Washington for irrigation of part of 443,400 acres of prime farmland and for flood control. Recent investigations have shown that the wooden railroad trestle, used to deliver earth material and rocks while constructing the dam, has deteriorated, forming vertical paths where earthen materials within the dam can move, leaving voids in the dam. Examination of the seepage problems indicates the material is internally unstable and is subject to failure, with an associated potential for loss of life and property downstream. Because of the deficiencies identified, Keechelus Lake has been operated at a restricted pool elevation 7 feet below normal full pool elevation 2,517 feet since November 1998, with increased monitoring and surveillance at the dam.

The Safety of Dams Act of 1978 (Pub. L. 95–578) and amendments of 1984 (Pub. L. 98–404) authorize the Secretary of the Interior to analyze existing Reclamation dams for changes in the state-of-the-art criteria and additional hydrologic and seismic data developed since the dams were constructed. For dams where a safety concern exists, the Secretary is authorized to modify the structure to ensure its continued safety.

Section 3 of the Safety of Dams Act states that construction authorized by the act shall be for dam safety and not for specific purposes of providing additional conservation storage capacity or developing benefits over and above those provided by the original dams and reservoirs.

Review and Inspection of the DEIS

Copies of the DEIS are available for public review and inspection at the following locations:

- Bureau of Reclamation, U.S. Department of the Interior, Room 7455, 18th and C Streets, NW, Washington, D.C. 20240.
- Bureau of Reclamation, Denver Office Library, Denver Federal Center, Building 67, Room 167, Denver, Colorado 80225.
- Bureau of Reclamation, Pacific Northwest Regional Office, 1150 North Curtis Road, Suite 100, Boise, Idaho 83706–1234.
- Bureau of Reclamation, Upper Columbia Area Office, 1917 Marsh Road, Yakima, Washington 98901.

Libraries

Carpenter Memorial Library, 302 N Pennsylvania Ave, Cle Elum, WA 98922; (509) 674–2313.

Central Washington University Library, 700 E 8th Ave, Ellensburg WA 98926; (509) 963–1777.

Ellensburg Public Library, 209 N Ruby, Ellensburg WA 98926; (509) 962–7250.

Yakima Valley Regional Library, 102 N 3rd St, Yakima WA 98901; (509) 452–8541.

University of Washington Campus, Suzzallo Library, Government Publications Division, Seattle WA 98195; (206) 543–1937

Internet

The DEIS is also available on the Internet at: http://www.pn.usbr.gov/

Hearing Process Information

Requests to make oral comments at the public hearings may be made at each hearing. Comments will be recorded by a court reporter. Speakers will be called in the order of their requests. In the interest of available time, each speaker will be asked to limit oral comments to five (5) minutes. Longer comments should be summarized at the public hearing and submitted in writing either at the public hearing or identified as hearing comments and mailed to be received by Mr. Kaumheimer no later than February 9, 2001 (the end of the public comment period).

Dated: December 4, 2000.

J. William McDonald,

Regional Director, Pacific Northwest Region.

[FR Doc. 00–31407 Filed 12–8–00; 8:45 am]

BILLING CODE 4310–MN–P

DEPARTMENT OF LABOR

Office of the Secretary

Submission for OMB Review; Comment Request

December 1, 2000.

The Department of Labor (DOL) has submitted the following public

information collection requests (ICRs) to the Office of Management and Budget (OMB) for review and approval in accordance with the Paperwork Reduction Act of 1995 (Pub. L. 104–13, 44 U.S.C. chapter 35). A copy of each individual ICR, with applicable supporting documentation, may be obtained by calling the Department of Labor. To obtain documentation for BLS, ETA, PWBA, and OASAM contact Karin Kurz ((202) 693–4127 or by E-mail to Kurz-Karin@dol.gov). To obtain documentation for ESA, MSHA, OSHA, and VETS contact Darrin King ((202) 693–4129 or by E–Mail to King-Darrin@dol.gov).

Comments should be sent to Office of Information and Regulatory Affairs, Attn: OMB Desk Officer for BLS, DM, ESA, ETA, MSHA, OSHA, PWBA, or VETS, Office of Management and Budget, Room 10235, Washington, DC 20503 ((202) 395–7316), within 30 days from the date of this publication in the **Federal Register**.

The OMB is particularly interested in comments which:

- Evaluate whether the proposed collection of information is necessary for the proper performance of the functions of the agency, including whether the information will have practical utility:
- Evaluate the accuracy of the agency's estimate of the burden of the proposed collection of information, including the validity of the methodology and assumptions used;
- Enhance the quality, utility, and clarity of the information to be collected; and
- Minimize the burden of the collection of information on those who are to respond, including through the use of appropriate automated, electronic, mechanical, or other technological collection techniques or other forms of information technology, *e.g.*, permitting electronic submission of responses.

Type of Review: Extension of a currently approved collection.

Agency: Mine Safety and Health Administration (MSHA).

Title: Gamma Radiation Exposure Records.

OMB Number: 1219–0039.

Affected Public: Business or other for-profit.

Frequency: Annually.

Number of Respondents: 2.

Number of Annual Responses: 2.

Estimated Time Per Response: 1-hour.

Total Burden Hours: 2.

Total Annualized Capital/Startup Costs: $0.

Total Annual Costs (operating/maintaining systmes or purchasing services): $0.

Description: Title 30 CFR 57.5047 requires that gamma radiation surveys be conducted annually in all underground mines where radioactive ores are mined. The Standard also requires, where average gamma radiation measurements are in excess of 2.0 milliroentgens per hour in the working place, that gamma radiation dosimeters be provided for all persons affected, and that records of cumulative individual gamma radiation exposure be kept. These recordkeeping requirements are necessary to protect miners from adverse health affects resulting from occupational exposure to gamma radiation.

Ira L. Mills,

Departmental Clearance Officer.

[FR Doc. 00–31454 Filed 12–8–00; 8:45 am]

BILLING CODE 4510–43–M

DEPARTMENT OF LABOR

Employment Standards Administration

Proposed Collection; Comment Request

ACTION: Notice.

SUMMARY: The Department of Labor, as part of its continuing effort to reduce paperwork and respondent burden, conducts a preclearance consultation program to provide the general public and Federal agencies with an opportunity to comment on proposed and/or continuing collections of information in accordance with the Paperwork Reduction Act of 1995 (PRA95) (44 U.S.C. 3506(c)(2)(A)). This program helps to ensure that requested data can be provided in the desired format, reporting burden (time and financial resources) is minimized, collection instruments are clearly understood, and the impact of collection requirements on respondents can be properly assessed. Currently, the Employment Standards Administration is soliciting comments concerning the proposed extension collection of the following information collections: (1) Certification by School Official (CM–981); and (2) Records to be Kept by Employers (Fair Labor Standards Act). Copies of the proposed information collection requests can be obtained by contacting the office listed below in the addressee section of this Notice.

DATES: Written comments must be submitted to the office listed in the addresses section below on or before February 9, 2001.

ADDRESSES: Ms. Patricia A. Forkel, U.S. Department of Labor, 200 Constitution Ave., NW., Room S–3201, Washington, DC 20210, telephone (202) 693–0339 (this is not a toll-free number), fax (202) 693–1451.

SUPPLEMENTARY INFORMATION:

Certification by School Official (CM–981)

I. Background

In order to be a dependent who is eligible for black lung benefits, a child aged 18 to 23 must be a full-time student as described in the Black Lung Benefits Act, 30 U.S.C. 902(g), and 20 CFR 725.209 or 20 CFR 410.370. The form is partially completed by the school registrar and is used to verify full-time status of the student.

II. Review Focus

The Department of Labor is particularly interested in comments which:

- Evaluate whether the proposed collection of information is necessary for the proper performance of the functions of the agency, including whether the information will have practical utility;
- Evaluate the accuracy of the agency's estimate of the burden of the proposed collection of information, including the validity of the methodology and assumptions used;
- Enhance the quality, utility and clarity of the information to be collected; and
- Minimize the burden of the collection of information on those who are to respond, including through the use of appropriate automated, electronic, mechanical, or other technological collection techniques or other forms of information technology, *e.g.*, permitting electronic submissions of responses.

III. Current Actions

The Department of Labor seeks the extension of approval to collect this information in order to determine continued eligibility of the student.

Type of Review: Extension.

Agency: Employment Standards Administration.

Title: Certification by School Official (CM–981).

OMB Number: 1215–0061.

Affected Public: Not-for-profit institutions; State, Local, or Tribal Government.

Frequency: Annually.

No. of Respondents: 1,000.

No. of Responses: 1,000.

Burden per Response: 10 minutes.

Estimated Total Burden Hours: 167.

Total Burden Cost (capital/startup): $0.

Total Burden Cost (operating/maintenance): $0.

Records To Be Kept by Employers (Fair Labor Standards Act)

I. Background

The Fair Labor Standards Act sets minimum wage, overtime pay, child labor and recordkeeping standards for employees engaged in interstate commerce or in the production of good for interstate commerce and to employees in certain enterprises. The Fair Labor Standards Act requires that all employers covered by the Act make, keep, and preserve records of employees and of wages, hours, an other conditions and practices of employment.

II. Review Focus

The Department of Labor is particularly interested in comments which:

- Evaluate whether the proposed collection of information is necessary for the proper performance of the functions of the agency, including whether the information will have practical utility;
- Evaluate the accuracy of the agency's estimate of the burden of the proposed collection of information, including the validity of the methodology and assumptions used;
- Enhance the quality, utility and clarity of the information to be collected; and
- Minimize the burden of the collection of information on those who are to respond, including through the use of appropriate automated, electronic, mechanical, or other technological collection techniques or other forms of information technology, *e.g.,* permitting electronic submissions of responses.

III. Current Actions

The Department of Labor seeks the extension of approval to collect this information in order to carry out its responsibility to enforce the provisions of the Fair Labor Standards Act.

Review: Extension.

Agency: Employment Standards Administration.

Title: Records to be Kept by Employers (Fair Labor Standards Act).

OMB Number: 1215–0017.

Affected Public: Business or other for-profit; Individuals or households; Farms; Not-for-profit institutions; Federal government; State, local or Tribal government.

Total Recordkeepers: 3.7 million.

Frequency: Weekly.

Average Time per Recordkeeper: 1 hour.

Estimated Total Burden Hours: 926,156.

Total Burden Cost (capital/startup): $0.

Total Burden Cost (operating/maintenance): $0.

Comments submitted in response to this notice will be summarized and/or included in the request for Office of Management and Budget approval of the information collection request; they will also become a matter of public record.

Dated: December 5, 2000.

Margaret J. Sherrill,

Chief, Branch of Management Review and Internal Control, Division of Financial Management, Office of Management, Administration and Planning, Employment Standards Administration.

[FR Doc. 00–31453 Filed 12–8–00; 8:45 am]

BILLING CODE 4510–27–M

LIBRARY OF CONGRESS

Copyright Office

[Docket No. 2000–9 CARP DTRA1 & 2]

Digital Performance Right in Sound Recordings and Ephemeral Recordings

AGENCY: Copyright Office, Library of Congress.

ACTION: Notices of intent to participate; Announcement of precontroversy discovery schedule.

SUMMARY: Due to the ruling by the Copyright Office that broadcasters are not exempt from copyright liability when they retransmit over the Internet copyrighted works contained on their AM and FM radio signals, the Library of Congress is providing an additional time period for filing Notices of Intent to Participate in the above-captioned consolidated proceedings. In addition, the Library is announcing the precontroversy discovery schedule for these consolidated proceedings.

DATES: Notices of Intent to Participate are due no later than January 10, 2001.

ADDRESSES: An original and five copies of a Notice of Intent to Participate should be delivered to: Office of the General Counsel, Copyright Office, James Madison Building, Room LM–403, First and Independence Avenue, SE, Washington, DC 20559–6000; or mailed to: Copyright Arbitration Royalty Panel (CARP), P.O. Box 70977, Southwest Station, Washington, DC 20024.

FOR FURTHER INFORMATION CONTACT: David O. Carson, General Counsel, or Tanya M. Sandros, Senior Attorney, Copyright Arbitration Royalty Panel, P.O. Box 70977, Southwest Station, Washington, DC 20024. Telephone (202) 707–8380. Telefax (202) 252–3423.

SUPPLEMENTARY INFORMATION: In today's **Federal Register** the Copyright Office announces a final rule in Docket No. RM 2000–3 concerning the definition of a ''Service'' for purposes of the statutory license governing the public performance of sound recordings by means of digital audio transmissions. The Office has determined that broadcasters retransmitting copyrighted programming contained on their AM and FM radio signals over digital communications networks, such as the Internet, are not exempt from copyright liability under section 114(d)(1)(A) of the Copyright Act. Because such retransmissions are not exempt, a public performance of a copyrighted work contained on a radio signal occurs each time it is retransmitted over a digital communications network, such as the Internet. Consequently, broadcasters must license the copyrights to the programming contained on such radio signals.

Licensing may be accomplished in one of two ways, depending upon the nature of the retransmissions. Broadcasters may enter into private licensing arrangements with the copyright holders of the programming they wish to retransmit. Or, broadcasters may be eligible for the statutory licenses under sections 114(f) and 112(e) of the Copyright Act to retransmit the works. The Library of Congress is currently conducting Copyright Arbitration Royalty Panel (CARP) proceedings to establish royalty rates and terms for these licenses.

Because today's rulemaking proceeding makes clear that broadcasters are not exempt, those broadcasters who intend to use the section 114(f) and 112(e) licenses may wish to participate in these CARP proceedings. The time periods for filing Notices of Intent to Participate in this proceeding, however, has passed. *See* 64 FR 52107 (September 27, 1999) (1998–2000 period) and 65 FR 55302 (September 13, 2000) (2001–2002 period). The Library has determined that, given the uncertainty surrounding today's rulemaking decision, it is appropriate to reopen the filing period for a limited time to allow additional participants in these proceedings.

Notices of Intent To Participate

Any interested party that has not filed a Notice of Intent to Participate in the rate proceeding for 1998–2000 or the rate proceeding for 2001–2002 may do so on or before January 10, 2001. The Notice of Intent to Participate should clearly specify whether it applies to the 1998–2000 proceeding, the 2001–2002 proceeding, or both. Failure to submit a

timely filed Notice will preclude a party from participating in these proceedings.

Consolidation of Proceedings

Concurrent with today's **Federal Register** publication, the Library is issuing an Order consolidating the 1998–2000 and 2001–2002 proceedings before a single CARP. The consolidation order may be found on the Copyright Office's website at http://www.loc.gov/copyright/carp/114schedule.html. Parties wishing to participate in the CARP proceedings should familiarize themselves with the contents of this Order.

In consolidating these two proceedings, the Office has assigned a single docket number applicable to both proceedings. Parties submitting documents to the Copyright Office should take account of the new docket number.

Schedule of Proceedings

The consolidation Order described above also announces the precontroversy discovery schedule for the CARP proceedings. For convenience, the schedule is repeated here.

Action	Date
Negotiated Protective Order.	February 1, 2001.
Filing of Written Direct Cases.	February 5, 2001.
Requests for Underlying Documents. Related to Written Direct Cases.	February 14, 2000.
Responses to Requests for Underlying Documents.	February 21, 2001.
Completion of Document Production.	February 26, 2001.
Follow-up Requests for Underlying Documents.	March 2, 2001.
Responses to Follow-up Requests.	March 8, 2001.
Motions Related to Document Production.	March 12, 2001.
Production of Documents in Response to Follow-up Requests.	March 16, 2001.
All Other Motions, Petitions and Objections.	March 21, 2001.
Initiation of Arbitration	May 21, 2001.

Dated: December 6, 2000.

David O. Carson,

General Counsel.

[FR Doc. 00–31459 Filed 12–8–00; 8:45 am]

BILLING CODE 1410–33–P

NATIONAL CREDIT UNION ADMINISTRATION

Sunshine Act Meeting; Notice of Meetings

TIME AND DATE: 10:00 a.m., Thursday, December 14, 2000.

PLACE: Board Room, 7th Floor, Room 7047, 1775 Duke Street, Alexandria, VA 22314–3428.

STATUS: Open.

MATTERS TO BE CONSIDERED:

1. Requests from Five (5) Federal Credit Unions to Convert to Community Charters.

2. Request for an Extension of a Waiver under Part 704 for Corporate Credit Unions.

3. Community Development Revolving Loan Program for Credit Unions: Notice of Applications for Participation and Interest Rate for Loans.

4. Interim Final Rule: Part 705, NCUA's Rules and Regulations, Community Development Revolving Loan Program For Credit Unions (CDRLP).

5. National Credit Union Share Insurance Fund (NCUSIF) Operating Level for 2001.

RECESS: 11:15 a.m.

TIME AND DATE: 11:30 a.m., Thursday, December 14, 2000.

PLACE: Board Room, 7th Floor, Room 7047, 1775 Duke Street, Alexandria, VA 22314–3428.

STATUS: Closed.

MATTERS TO BE CONSIDERED:

1. Administrative Action under Part 704 of NCUA's Rules and Regulations. Closed pursuant to exemption (8).

2. Administrative Action under Part 708 of NCUA's Rules and Regulations. Closed pursuant to exemption (8).

3. Two (2) Personnel Matters. Closed pursuant to exemptions (2) and (6).

FOR FURTHER INFORMATION CONTACT. Becky Baker, Secretary of the Board, Telephone 703–518–6304.

Becky Baker,

Secretary of the Board.

[FR Doc. 00–31641 Filed 12–7–00; 2:39 pm]

BILLING CODE 7535–01–M

NUCLEAR REGULATORY COMMISSION

[Docket No. 50–213]

Connecticut Yankee Atomic Power Company, et al. (Haddam Neck Plant); Notice of Closure of the Public Comment Period for the Haddam Neck Plant License Termination Plan

The Nuclear Regulatory Commission (NRC) is in receipt of and has made available for public inspection and comment the License Termination Plan (LTP) for the Haddam Neck Plant (HNP) located in Haddam, Connecticut. NRC's receipt of the HNP LTP and the LTP's availability for public inspection and comment was noticed in the **Federal Register** on August 23, 2000 (65 FR 51345). A public meeting was conducted by NRC staff (65 FR 59215, dated October 4, 2000), to discuss the HNP LTP on October 17, 2000, at the Haddam-Killingworth High School, Higganum, Connecticut. The purpose of this notice is to announce that the public comment period for the HNP LTP will close on December 29, 2000.

Connecticut Yankee Atomic Power Company (CYAPCO, or the licensee) announced permanent cessation of power operations of HNP on December 5, 1996. In accordance with NRC regulations, CYAPCO submitted a Post-Shutdown Decommissioning Activities Report (PSDAR) for HNP to the NRC on August 22, 1997. The facility is undergoing active decontamination and dismantlement.

In accordance with 10 CFR 50.82(a)(9), all power reactor licensees must submit an application for termination of their license. The application for license termination must be accompanied or preceded by an LTP to be submitted for NRC approval. If found acceptable by the NRC staff, the LTP is approved by license amendment, subject to such conditions and limitations as the NRC staff deems appropriate and necessary. CYAPCO submitted the proposed LTP for HNP by application dated July 7, 2000. In accordance with 10 CFR 20.1405 and 10 CFR 50.82(a)(9)(iii), the NRC provided notice to individuals in the vicinity of the site that the NRC was in receipt of the HNP LTP and would accept comments from affected parties (65 FR 51345, dated August 23, 2000).

The NRC staff has begun the technical review of the HNP LTP. While NRC will accept public comments at any time, comments are most helpful and the staff is best able to consider them during the LTP review, if they are received early in the review process. Therefore, NRC has decided to close the formal public

comment period on December 29, 2000. The HNP LTP (ADAMS Accession Number ML003735143) may be examined, and/or copied for a fee, at the NRC's Public Document Room, located at One White Flint North, 11555 Rockville Pike (first floor), Rockville, Maryland, and is accessible electronically from the ADAMS Public Library component on the NRC Web site, *http://www.nrc.gov* (the Public Electronic Reading Room). The LTP may also be viewed at the CYAPCO Web site at *http://www.connyankee.com.*

FOR FURTHER INFORMATION, CONTACT: Mr. Louis L. Wheeler by mail, Mail Stop O–7–C2, Project Directorate IV & Decommissioning, Division of Licensing Project Management, Office of Nuclear Reactor Regulation, U.S. Nuclear Regulatory Commission, Washington, D.C. 20555–0001; telephone 301–415–1444; or e-mail *dxw@nrc.gov.*

For the Nuclear Regulatory Commission.

Dated at Rockville, Maryland, this 5th day of December 2000.

Richard F. Dudley,

Acting Chief, Decommissioning Section, Project Directorate IV and Decommissioning Division of Licensing Project Management, Office of Nuclear Reactor Regulation.

[FR Doc. 00–31396 Filed 12–11–00; 8:45 am]

BILLING CODE 7590–01–P

SECURITIES AND EXCHANGE COMMISSION

Proposed Collection; Comment Request

Upon Written Request, Copies Available From Securities and Exchange Commission, Office of Filings and Information Services, Washington, DC 20549.

Extension:

Appendix F to Rule 15c3–1, SEC File No. 270–440, OMB Control No. 3235–0496

Rule 17 Ad–16, SEC File No. 270–363, OMB Control No. 3235–0413.

Notice is hereby given that pursuant to the Paperwork Reduction Act of 1995 (44 U.S.C. 3501 *et seq.*) the Securities and Exchange Commission (''Commission'') is soliciting comments on the collection of information summarized below. The Commission plans to submit these existing collections of information to the Office of Management and Budget for extension and approval.

Appendix F to Rule 15c3–1 requires a broker-dealer choosing to register as an OTC derivative dealer to develop and maintain an internal risk management system based on Value-at-Risk (''VAR'') models Appendix F also requires the OTC derivatives to notify Commission staff of the system and of certain other periodic information including when the VA model deviates from the actual performance of the OTC derivatives dealers' portfolio. It is anticipated that approximately six (6) broker-dealers will spend 1,000 hours per year complying with Appendix F. The total burden is estimated to be approximately 6,000 hours. Each broker-dealer will spend approximately $76,500 per response for a total annual expense for all broker-dealers of $459,000.

Rule 176AD–16 requires a registered transfer agent to provide written notice to a qualified registered securities depository when assuming or terminating transfer agent services on behalf of an issuer or when changing its name or address. These recordkeeping requirements address the problem of certificate transfer delays caused by transfer requests that are directed to the wrong transfer agent or the wrong address.

Given that there are approximately 450 respondents who submit Rule 17Ad–16 notices, the staff estimates that the average number of hours necessary for each transfer agent to comply with Rule 17Ad–16 is approximately 15 minutes per notice or 3.5 hours per year, totaling 1.575 hours industry-wide. The average cost per hour is approximately $30 per hours, with the industry-wide cost estimated at approximately $47,250. However, the information required by Rule 17Ad–16 generally already is maintained by registered transfer agents. The amount of time devoted to compliance with Rule 17AD–16 varies according to differences in business activity.

Written comments are invited on: (a) Whether the proposed collection of information is necessary for the proper performance of the functions of the agency, including whether the information shall have practical utility; (6) the accuracy of the agency's estimate of the burden of the proposed collection of information; (c) ways to enhance the quality, utility, and clarity of the information to be collected; and (d) ways to minimize the burden of the collection of information on respondents, including through the use of automated collection techniques or other forms of information technology. Consideration will be given to comments and suggestions submitted in writing within 60 days of this publication.

Direct your written comments to Michael E. Bartell, Associate Executive Director, Office of Information Technology, Securities and Exchange Commission, 450 5th Street, NW., Washington, DC 20549.

Dated: November 17, 2000.

Margaret H. McFarland,

Deputy Secretary.

[FR Doc. 00–31444 Filed 12–8–00; 8:45 am]

BILLING CODE 8010–01–M

SECURITIES AND EXCHANGE COMMISSION

[Release No. 35–27289]

Filings Under the Public Utility Holding Company Act of 1935, as Amended (''Act'')

December 4, 2000.

Notice is hereby given that the following filing(s) has/have been made with the Commission pursuant to provisions of the Act and rules promulgated under the Act. All interested persons are referred to the application(s) and/or declaration(s) for complete statements of the proposed transaction(s) summarized below. The application(s) and/or declaration(s) and any amendment(s) is/are available for public inspection through the Commission's Branch of Public Reference.

Interested persons wishing to comment or request a hearing on the application(s) and/or declaration(s) should submit their views in writing by December 27, 2000, to the Secretary, Securities and Exchange Commission, Washington, DC 20549–0609, and serve a copy on the relevant applicant(s) and/or declarant(s) at the address(es) specified below. Proof of service (by affidavit or, in the case of an attorney at law, by certificate) should be filed with the request. Any request for hearing should identify specifically the issues of facts or law that are disputed. A person who so requests will be notified of any hearing, if ordered, and will receive a copy of any notice or order issued in the matter. After December 27, 2000, the application(s) and/or declaration(s), as filed or as amended, may be granted and/or permitted to become effective.

Wheeling Power Company (70–9799)

Wheeling Power Company (''Wheeling''), 51 16th Street, Wheeling, West Virginia 26003, a public utility subsidiary of American Electric Power Company, Inc., a registered holding company, has filed with this Commission a declaration under sections 6(a) and 7 of the Act and rule 54 under the Act.

Wheeling proposes to issue from time to time through June 30, 2005 up to $20 million at any one time outstanding, unsecured promissory notes (''Notes'') to one or more commercial banks, financial institutions or other

institutional investors or lenders under one or more term-loan agreements. The Notes will mature in not less than nine months nor more than ten years and will have a fixed or fluctuating rate of interest, or a combination of both. The actual rate of interest of each Note shall be subject to negotiation between Wheeling and the lender, but any fixed rate of interest will not exceed 500 basis points over the yield, at issuance, of U.S. Treasury obligations with comparable maturity dates, and a fluctuating rate will not exceed 500 basis points over the prime rate as announced from time to time by a major bank. If a bank or financial institution arranges financing with a third party, the institution may charge a placement fee not in excess of 1% of the principal amount of the borrowing. Wheeling will use the proceeds from the sale of the Notes to repay its long- and short-term debt.

Wheeling also seeks authorization to enter into hedging transactions, including anticipatory hedges, with respect to its indebtedness in order to manage and minimize interest rate costs and to lock-in current interest rates.

Wheeling requests authority to enter into, perform, purchase and sell financial instruments intended to manage the volatility of interest rates, including but not limited to interest rate swaps, caps, floors, collars and forward agreements or any other similar agreements. Wheeling would employ interest rate derivatives as a means of prudently managing the risk associated with any of its outstanding debt issued under the authority requested in this application or an applicable exemption by, in effect, synthetically (1) converting variable rate debt to fixed rate debt; (2) converting fixed rate debt to variable rate debt; and (3) limiting the impact of changes in interest rates resulting from variable rate debt. In no case would the notional principal amount of any interest rate swap exceed that of the underlying debt instrument and related interest rate exposure. The transactions would be for fixed periods. Interest rate hedges would only be entered into with counterparties (''Approved Counterparties'') whose senior debt ratings, as published by a national recognized rating agency are greater than or equal to ''BBB'', or an equivalent rating.

In addition, Wheeling requests authorization to enter into interest rate hedging transactions with respect to anticipated debt offerings (''Anticipatory Hedges''), subject to certain limitations and restrictions. Anticipatory Hedges would only be entered into with Approved Counterparties, and would be utilized to fix and/or limit the interest rate risk associated with any new issuance through (1) a forward sale of exchange-traded Hedge Instruments (each a ''Forward Sale''); (2) the purchase of put options on Hedge Instruments (a ''Put Options Purchase''); (3) a Put Options Purchase in combination with the sale of call options on Hedge Instruments (a ''Zero Cost Collar''); (4) transactions involving the purchase or sale, including short sales, of Hedge Instruments; or (5) some combination of a Forward Sale, Put Options Purchase, Zero Cost Collar and/or other derivative or cash transactions, including, but not limited to structured notes, caps and collars, appropriate for the Anticipatory Hedges. Anticipatory Hedges may be executed on-exchange (''On-Exchange Trades'') with brokers through the opening of futures and/or options positions traded on the Chicago Board of Trade, the opening of over-the-counter positions with one or more counterparties (''Off-Exchange Trades''), or a combination of On-Exchange Trades and Off-Exchange Trades. Wheeling will determine the optimal structure of each Anticipating Hedge transaction at the time of execution. Wheeling may decide to lock in interest rates and/or limit its exposure to interest rate increases. Wheeling states that it will comply with standards relating to accounting for derivative transactions as are adopted and implemented by the Financial Accounting Standards Board (''FASB''). In addition, these financial instruments will qualify for hedge accounting treatment under FASB rules.

For the Commission, by the Division of Investment Management, under delegated authority.

Margaret H. McFarland,

Deputy Secretary.

[FR Doc. 00–31379 Filed 12–8–00; 8:45 am]

BILLING CODE 8010–01–M

SECURITIES AND EXCHANGE COMMISSION

[Rel. No. IC–24784; File No. 812–12090]

American United Life Insurance Company, et al.

December 4, 2000.

AGENCY: Securities and Exchange Commission (''Commission'').

ACTION: Notice of application for an order pursuant to Section 26(b) of the Investment Company Act of 1940 (the ''1940 Act'') approving certain substitutions of securities.

Applicants: American United Life Insurance Company (''AUL'') and AUL American Unit Trust (''AUL Account'') (collectively referred to herein as the ''Applicants'').

SUMMARY OF APPLICATION: Applicants request an order to permit a registered unit investment trust to substitute shares of the State Street Equity 500 Index Fund (''State Street 500 Fund''), a series of State Street Institutional Investment Trust (''State Street Trust''), for shares of the Index 500 Portfolio (''Fidelity 500 Portfolio''), a series of Variable Insurance Products Fund II (''VIP II'') currently held by that unit investment trust.

Filing Date: The application was filed on May 5, 2000, and amended and restated on November 30, 2000.

Hearing Or Notification Of Hearing: An order granting the application will be issued unless the Commission orders a hearing. Interested persons may request a hearing by writing to the Secretary of the Commission and serving Applicants with a copy of the request, personally or by mail. Hearing requests should be received by the Commission by 5:30 p.m. on December 26, 2000, and should be accompanied by proof of service on Applicants, in the form of an affidavit or, for lawyers, a certificate of service. Hearing requests should state the nature of the writer's interest, the reason for the request, and the issues contested. Persons may request notification of a hearing by writing to the Secretary of the Commission.

ADDRESSES: Secretary, Securities and Exchange Commission, 450 Fifth Street, NW., Washington, DC 20549–0609. Applicants: c/o Richard A. Wacker, Esq., American Untied Life Insurance Company, One American Square, Indianapolis, Indiana 46282. Copies to: Ruth S. Epstein, Esq., Dechert, 1775 Eye Street, NW., Washington, DC 20006–2401.

FOR FURTHER INFORMATION CONTACT: Lorna MacLeod, Branch Chief, at (202) 942–0684, Office of Insurance Products, Division of Investment Management.

SUPPLEMENTARY INFORMATION: The following is a summary of the application; the complete application may be obtained for a fee from the Public Reference Branch of the Commission, 450 Fifth Street, NW., Washington, DC 20549–0102, (tel. (202) 942–8090).

Applicant's Representations

1. AUL is an Indiana mutual life insurance company. AUL is the depositor and sponsor of the AUL

Account, a separate investment account established under Indiana law.

2. The AUL Account is registered with the Commission under the 1940 Act as a unit investment trust. The assets of the AUL Account support certain group annuity contracts (collectively, the ''Contracts''). Certain Contracts may allow ongoing contributions that can vary in amount and frequency, while other Contracts may allow only a single contribution to be made. All of the Contracts provide for the accumulation of values on a variable basis, a fixed basis, or both. The Contracts also provide several options for fixed annuity payments to begin on a future date.

3. The AUL Account is currently divided into thirty-five (35) sub-accounts referred to as Investment Accounts. Each Investment Account invests exclusively in shares of AUL American Series Fund, Inc., Alger American Fund, American Century Mutual Funds, Inc., American Century Quantitative Equity Funds, American Century Variable Portfolios, Inc., American Century World Mutual Funds, Inc., Calvert Variable Series, Variable Insurance Products Fund, VIP II, Invesco Dynamics Fund, Inc., Janus Aspen Series, PBHG Insurance Series Fund, Inc., SAFECO Resource Series Trust, State Street Trust, T. Rowe Price Equity Series, Inc., and Vanguard Explorer Fund, Inc. (collectively, ''Funds'') or in shares of specific series of a Fund. Contributions may be allocated to one or more Investment Accounts available under a Contract. Not all of the Investment Accounts may be available under a particular Contract and some of the Investment Accounts are not available for certain types of Contracts.

4. VIP II is organized as a Massachusetts business trust and is registered as an open-end management investment company under the 1940 Act. VIP II is a series investment company, as defined by Rule 18f–2 under the 1940 Act, and currently offers shares of fourteen separate series. Only the Fidelity 500 Portfolio would be involved in the proposed substitution.

5. State Street Trust is organized as a Massachusetts business trust and is registered as an open-end management investment company under the 1940 Act. As of the date of this application, it has not commenced operations. State Street Trust is a series investment company, as defined by Rule 18f–2 under the 1940 Act, and currently intends to offer five separate series of shares (each, a ''Feeder''). Each Feeder currently intends to invest all of its assets in a corresponding series of State Street Master Funds (each, a ''Master'') that has the same investment objective as, and investment policies that are substantially similar to those of, the corresponding Feeder. As long as a Feeder remains completely invested in a Master (or any other investment company), State Street Bank and Trust Company (''State Street''), acting through its division, State Street Global Advisors (the ''Adviser'') is not entitled to receive any investment advisory fee with respect to the Feeder. A Feeder may withdraw its investment from the related Master at any time if State Street Trust's Board of Trustees determines that it is in the best interests of the Feeder and its shareholders to do so. State Street Trust has retained the Adviser as investment adviser to manage a Feeder's assets in the event that the Feeder withdraws its investment from its corresponding Master. Only the State Street 500 Fund would be involved in connection with the substitution transactions described below.

6. Each of the Contracts expressly reserves to the Applicants the right, subject to compliance with applicable law, to change or add investment companies. The prospectuses describing the Contracts contain appropriate disclosure of this right.

7. The AUL Account imposes no limitations on the number of transfers between investment accounts available under a contract or the fixed account and no charges on transfers. AUL reserves the right, however, at a future date, to assess transfer charges and to limit the number and frequency of transfers.

8. Applicants propose to substitute Class A shares issued by the State Street 500 Fund for the Initial Class shares issued by the Fidelity 500 Portfolio (the ''Substitution'').

9. The chart below shows the investment objectives of the State Street 500 Fund and the Fidelity 500 Portfolio.

Removed portfolio	Investment objective	Substituted portfolio	Investment objective
Fidelity 500 Portfolio	Seeks investment results that correspond to the total return of common stocks publicly traded in the United States, as represented by the Standard & Poor's 500 Composite Stock Price Index (''S&P 500'').	State Street 500 Fund	Seeks to provide an investment return matching, as closely as possible before expenses, the performance of the S&P 500.

10. The chart below shows: (1) the management fees, operating expenses and total expenses for Initial Class shares of the Fidelity 500 Portfolio for the year ending December 31, 1999; and (b) the estimated management fees, 12b–1 fees, operating expenses and total expenses of Class A shares of the State Street 500 Fund following the proposed substitutions. The fees and expenses in the chart are presented as a percentage of average daily net assets.

	Replaced fund—fidelity 500 (percent)	Sustituted fund—state street 500 [1] (percent)
Management Fee	0.24	0.045
Distribution and Service (12b–1) Fee	0.00	0.150
Other Expenses	0.10	0.050
Total Annual Operating Expenses:		
(Before Expense waivers and reimbursements)	0.34	0.25
Minus expense waivers or reimbursements	0.06	0.000
Total Annual Operating Expenses:		

	Replaced fund—fidelity 500 (percent)	Sustituted fund—state street 500 [1] (percent)
(After expense waivers and reimbursements)	[2] 0.28	0.245

[1] The feeder fund imposes a Rule 12b–1 fee of 15 basis points and estimates other expenses of 5 basis points. The master imposes an annual unitary management fee of 4.5 basic points, which compensates State Street for its services as adviser, custodian and transfer agent, and for assuming ordinary operating expenses, including ordinary legal and audit expenses. By investing in the master fund, the feeder pays a pro rata share of the master fund expenses, based on the net asset value of its investment in the master. In other words, the State Street 500 Fund will pay the fee with respect to its pro rata share of the total assets invested in the State Street 500 Master.

[2] Effective April 18, 1998, FMR has voluntarily agreed to reimburse Initial Class Shares of the Fidelity 500 Portfolio to the extent that total operating expenses (excluding interest, taxes, securities lending costs, brokerage commissions and extraordinary expenses), as a percentage of average net assets, exceed 0.28%. This arrangement can be discontinued by FMR at any time.

11. Applicants provided, or will provide, a notice of the Substitution (the ''First Notice'') to Contract Owners and Participants, which describes the proposed substitution and discloses that AUL will not exercise any rights reserved under the contract to impose additional restrictions on transfers until at least thirty (30) days after the date of the substitution.

12. Upon effectiveness of the registration statement of State Street Trust, and approval of this application by the Commission, the Applicants will send Contract Owners further detailed notice concerning the proposed substitutions (the ''Second Notice''). The Second Notice will inform Contract Owners and Participants that the substitutions will be carried out, identify the anticipated date of the substitutions and inform Contract Owners and Participants that AUL will not exercise any rights reserved under the Contract to impose additional restrictions on transfers until at least thirty (30) days after the date of the substitution. Together with this disclosure, all such existing Contract Owners and Participants also will be sent to prospectus for the State Street 500 Fund. New purchasers of Contracts also will be provided with the Contract prospectuses, the Second Notice, and a prospectus for the State Street 500 Fund.

13. Applicants will mail a confirmation of the substitutions to affected Contract Owners within five days after the substitutions are affected. The Confirmation will disclose (a) that the substitution was carried out and (b) that AUL will not exercise any rights reserved under the contract to impose additional restrictions on transfers until at least thirty (30) days after the date of the substitution.

14. Applicants make the following representations regarding the significant terms of the Substitution:

a. The State Street 500 Fund has investment objectives, investment strategies, and anticipated risks that are substantially similar in all material respects to those of the Fidelity 500 Portfolio.

b. At the time of the substitution, the aggregate fees and expenses of the State Street 500 Fund will be lower than those of the Fidelity 500 Portfolio. Applicants agree that AUL will not increase total separate account charges (net of any waivers or reimbursements) of the Investment Account that invests in the State Street Fund for those Contract Owners who were Contract Owners on the Substitution Date for a period of two years from the Substitution Date. Applicants further agree that if the total operating expenses for the State Street 500 Fund (taking into account expense waivers and reimbursements) (''State Street Expenses'') for any fiscal quarter during the two-year period following the Substitution Date exceed on an annualized basis 0.28% of average daily net assets (the expense ratio for the Fidelity 500 Portfolio for the fiscal year ended December 31, 1999), AUL will make adjustments to the separate account charges of the Investment Account that invests in the State Street Fund for those Contract Owners who were Contract Owners on the Substitution Date, such that the State Street Expenses together with separate account expenses paid during that period will not exceed, on an annualized basis, 0.28% of average daily net assets plus the separate account expenses for the corresponding Investment Account during the fiscal year ending December 31, 1999.

c. Contract Owners and Participants may transfer assets from one Investment Account to another Investment Account available under their Contract without the imposition of any fee, charge or other penalty that might otherwise be imposed from the date of the First Notice through a date at least thirty days following the Substitution Date.

d. The substitutions, in all cases, will be affected at the net asset value of the respective shares of the Fidelity 500 Portfolio and the State Street 500 Fund in conformity with Section 22(c) of the 1940 Act and Rule 22c–1 thereunder, without the imposition of any transfer or similar charge by the Applicants, and with no change in the amount of any Contract Owner's Contract value or in the dollar value any Contract Owner's or Participant's investment in such Contract.

e. Contract Owners and Participants will not incur any fees or charges as a result of the proposed substitutions, nor will their rights or AUL's obligations under the Contracts be altered in any way. AUL will bear all expenses incurred in connection with the proposed substitutions and related filings and notices, including legal, accounting and other fees and expenses. The proposed substitutions will not cause the Contract fees and charges currently being paid by existing Contract Owners or Participants to be greater after the proposed substitutions than before the proposed substitutions.

f. Redemptions in-kind and contributions in-kind will be done in a manner consistent with the investment objectives, policies and diversification requirements of the Fidelity 500 Portfolio and State Street 500 Fund. Consistent with Rule 17a–7(d) under the 1940 Act, no brokerage commissions, fees (except customary transfer fees) or other remuneration will be paid in connection with the in-kind transactions.

g. The substitutions will not be counted as new investment selections in determining the limit, if any, on the total number of Funds that Contract Owners or Participants can select during the life of a Contract.

h. The substitutions will not alter in any way the tax benefits, life insurance and other Contracts benefits, or any Contract obligations of the Applicants, under the Contracts.

i. Contract Owners and Participants may withdraw amounts under the Contracts or terminate their interest in a Contract, under the conditions that currently exist, including payment of any applicable withdrawal or surrender charge.

j. Contract Owners and Participants affected by the substitutions will be sent written confirmation of the substitutions that identify each substitution made on behalf of that Contract Owner or Participant within five days following the Substitution Date.

Applicants' Legal Analysis And Conditions

1. Section 26(b) of the 1940 Act provides that it shall be unlawful for any depositor or trustee of a registered unit investment trust holding the security of a single issuer to substitute another security for such security unless the Commission shall have approved such substitution; and the Commission shall issue an order approving such substitution if the evidence establishes that it is consistent with the protection of investors and the purposes fairly intended by the policies and provisions of the 1940 Act. Section 26(b) protects the expectation of investors that the unit investment trust will accumulate shares of a particular issuer and is intended to insure that unnecessary or burdensome sales loads, additional reinvestment costs or other charges will not be incurred due to unapproved substitutions of securities.

2. Applicants request an order pursuant to Section 26(b) of the 1940 Act approving the Substitution. Applicants assert that the purposes, terms, and conditions of the Substitution are consistent with the protections for which Section 26(b) was designed. The Applicants assert the Substitution will benefit Contract Owners because the State Street 500 Fund will enjoy lower expenses than the Fidelity 500 Portfolio. Given the similarities in investment strategies between the Fidelity 500 Portfolio and the State Street 500 Fund, Applicants assert that the lower expense ratio of the State Street 500 Fund is likely to result in higher investment returns than those obtained by the Fidelity 500 Portfolio.

3. Contract Owners and Participants who do not want their assets allocated to the State Street 500 Fund will be able to transfer assets to any one of the other Investment Accounts available under their Contract without any transfer charge.

4. Applicants represent that the Substitution and related redemptions in kind and purchases will not result in any change in the amount of any Contract Owner's or participant's Contract value or in the dollar value of his or her investment in such Contract, or the life benefits, tax benefits or any contractual obligation of the Applicants under the Policies. Contract Owners will not incur any fees, expenses or charges as a result of the proposed transactions. Furthermore, the proposed transactions will not result in any change to the Contract fees and charges currently being paid by existing Contract Owners.

5. The Applicants will not complete the Substitution as described in the application unless all of the following conditions are met:

a. The Commission will have issued an order approving the Substitution under Section 26(b) of the 1940 Act.

b. The registration statement for State Street Trust shall have become effective.

c. Each Contract Owner and Participant will have been mailed the First Notice, the Second Notice and effective prospectuses for the Contracts and the State Street 500 Fund.

d. The Applicants will have satisfied themselves, based on advice of counsel familiar with insurance laws, that the Contracts allow the substitution of portfolios as described in this application, and the transactions can be consummated as described herein under applicable insurance laws and under the Contracts.

e. The Applicants will have complied with any regulatory requirements they believe are necessary to complete the transactions in each jurisdiction where the Contracts have been qualified for sale.

Conclusion

Applicants assert that, for the reasons summarized above, the requested order approving the Substitution should be granted.

For the Commission, by the Division of Investment Management, pursuant to delegated authority.

Margaret H. McFarland,

Deputy Secretary.

[FR Doc. 00–31381 Filed 12–8–00; 8:45 am]

BILLING CODE 8010–01–M

SECURITIES AND EXCHANGE COMMISSION

[Rel. No. IC–24785; File No. 812–11332]

AIG Life Insurance Company, et al.

December 5, 2000.

AGENCY: Securities and Exchange Commission (''SEC'' or ''Commission'').

ACTION: Notice of application for an order pursuant to Section 26(b) of the Investment Company Act of 1940, as amended (''1940 Act'') approving certain substitution of securities, and pursuant to Section 17(b) of the 1940 Act exempting related transactions from Section 17(a) of the 1940 Act.

APPLICANTS: AIG Life Insurance Company (''AIG''), AIG Life Insurance Company Varible Account I (''Variable Account I''), American International Life Insurance Company of New York (''American''), American International Assurance Company of New York Variable Account A (''Variable Account A''), ReliaStar Life Life Insurance Company of New York (''ReliaStar,'' and together with AIG and American, the ''Variable Insurers'' or the ''Insurance Company Applicants''), ReliaStar Life Insurance Company of New York Variable Annuity Fund P (''Variable Annuity Fund P''), ReliaStar Life Insurance Company of New York Variable Annuity Fund Q (''Variable Annuity Fund Q,'' and together with Variable Annuity Fund P, the ''ReliaStar Separate Accounts'') (collectively, with Variable Account I and Variable Account A, the ''Separate Accounts'') and Alliance Variable Products Series Fund, Inc. (''AVP'').

SUMMARY OF APPLICATION: Applicants request an order permitting (1) the substitution of shares of AVP's Total Return Portfolio (''Total Return Portfolio'') for shares of AVP's Conservative Investors Portfolio (''Conservative Investors Portfolio'') and AVP's Growth Investors Portfolio (''Growth Investors Portfolio'', and (2) the substitution of shares of AVP's Money Market Portfolio (''Money Market Portfolio'') and shares of the Oppenheimer Money Market Fund VA (''Money Fund'') for shares of AVP's Short-Term Multi Market Portfolio (''Multi Market Portfolio''), (The Conservative Investors Portfolio, Growth Investors Portfolio and Multi-Market Portfolio are referred to herein as the ''Replaced Portfolios.'' The Total Return Portfolio, Money Market Portfolio and Money Fund are referred to herein as the ''Substitute Portfolios.'' The Replaced Portfolios and the Substitute Portfolios are referred to, collectively, as the ''Affected Portfolios.'') AIG, Variable Account I, American, Variable Account A and AVP also seek relief from Section 17(a) for purposes of effecting certain of the substitutions partially in-kind.

FILING DATE: The application was filed on May 1, 2000, and amended and restated on October 19, 2000. Applicants represent that they will file an amended and restated application during the notice period to conform to the representations set forth herein.

HEARING OR NOTIFICATION OF HEARING: An order granting the application will be issued unless the Commission orders a hearing. Interested persons may request a hearing by writing to the Secretary of the Commission and serving Applicants

with a copy of the request, personally or by mail. Hearing requests should be received by the Commission by 5:30 p.m. on December 26, 2000, and should be accompanied by proof of service on the Applicants, in the form of an affidavit, or for lawyers, a certificate of service. Hearing requests should state the nature of the writer's interest, the reason for the request, and the issues contested. Persons may request notification of a hearing by writing to the Secretary of the SEC.

ADDRESSES: Secretary, Securities and Exchange Commission, 450 Fifth Street, NW., Washington, DC 20549–0609. Applicants, c/o Joseph B. Kittredge, Jr., Ropes & Gray, One International Place, Boston, Massachusetts 02110.

FOR FURTHER INFORMATION CONTACT: Zandra Y. Bailes, Senior Counsel, or Lorna J. MacLeod, Branch Chief, Office of Insurance Products, Division of Investment Management at (202) 942–0670.

SUPPLEMENTARY INFORMATION: The following is a summary of the application. The complete application is available for a fee from the SEC's Public Reference Branch, 450 Fifth Street, NW., Washington, DC 20549 (tel. (202) 942–8090).

Applicants' Representations

1. AIG is a stock life insurance company initially organized under the laws of Pennsylvania and reorganized under the laws of Delaware. AIG is a subsidiary of American International Group, Inc., which serves as the holding company for a number of companies engaged in the international insurance business in approximately 130 countries and jurisdictions around the world.

2. AIG's Variable Account I is a separate account of AIG that serves as a funding vehicle for a flexible premium, deferred annuity contract with a fixed investment option. Variable Account I is registered with the Commission as a unit investment trust under the 1940 Act. Variable Account I is divided into subaccounts or divisions (''Divisions''), each of which invests in shares of a different portfolio of AVP.

3. American is a stock life insurance company organized under the laws of New York. American is also a subsidiary of American International Group, Inc.

4. American's Variable Account A is a separate account that serves as a funding vehicle for a flexible premium, deferred annuity contract with a fixed investment option. Variable Account A is registered with the Commission as a unit investment trust under the 1940 Act. Variable Account A is divided into Divisions, each of which invests in shares of a different portfolio of a mutual fund, including various series of AVP.

5. ReliaStar is a stock life insurance company incorporated pursuant to the laws of New York in 1917 under the name ''The Morris Plan Insurance Society.'' It adopted the names ''Bankers Security Life Insurance Society'' in 1946, ''ReliaStar Bankers Security Life Insurance Company'' in 1996, and ''ReliaStar Life Insurance Company of New York'' in 1998. It is authorized to conduct business in all fifty states, the District of Columbia and the Dominican Republic. ReliaStar is a wholly-owned indirect subsidiary of ReliaStar Financial Corp., a holding company whose subsidiaries specialize in life insurance and related financial services businesses.

6. The ReliaStar Separate Accounts are registered as unit investment trusts under the 1940 Act and are separate accounts as that term is defined in Section 2(a)(37) of the 1940 Act. Each ReliaStar Separate Account is divided into Divisions, each of which invests in shares of a different portfolio of a mutual fund, including various series of AVP.

7. AVP, organized as a Maryland corporation on November 17, 1987, is registered under the 1940 Act as an open-end management investment company and is a ''series company'' as described in Rule 18f–2 under the 1940 Act. AVP has issued shares of beneficial interest in nineteen series, including the Total Return Portfolio, the Conservative Investors Portfolio, the Growth Investors Portfolio, the Money Market Portfolio and the Multi Market Portfolio, each of which represents interests in a different portfolio (collectively, the ''AVP Portfolios''). Each AVP Portfolio is managed by Alliance Capital Management L.P. (''Alliance'').

8. Oppenheimer Variable Account Funds (''OVAF'') is a multi-series open-end diversified management investment company organized as a Massachusetts business trust. The Money Fund was organized as a series of OVAF in 1983. OVAF has issued shares of beneficial interest in ten series of shares, including the Money Fund, each of which represents interests in a different portfolio. The OVAF Portfolios, including the Money Fund, are managed by Oppenheimer Funds, Inc.

9. The AVP Portfolios serve as investment vehicles for use in connection with variable life insurance contracts and variable annuity certificates and contracts (collectively, the ''Contracts)'' issued by the Separate Accounts. As of the date of the Application, all shares of the Substitute Portfolios are owned by the Separate Accounts.

10. Each Contract reserves to AIG, American or ReliaStar the right to replace the shares of one AVP Portfolio held by the relevant Separate Account with shares of another AVP Portfolio or with shares of another registered investment company, subject to Commission approval. Applicants represent that this substitution right is clearly disclosed in the Separate Accounts' prospectuses.

11. Applicants propose to substitute the Substitute Portfolios for the Replaced Portfolios as follows: (a) The substitution of shares of the Total Return Portfolio for shares of the Conservative Investors Portfolio and Growth Investors Portfolio (the ''C&G Substitution''); (b) the substitution of shares of the Money Market Portfolio in the case of AIG and American and their Separate Accounts and shares of the Oppenheimer Money Fund, in the case of ReliaStar and its Separate Accounts, for shares of the Multi-Market Portfolio (the ''MM Substitution'').

12. Contracts issued by AIG and American limit contractowners to twelve free transfers a year and charge contractowners $10 for each additional transfer.

13. Applicants represent that all three C&G Substitution Affected Portfolios operate as asset allocation portfolios, each investing principally in the same asset classes (*i.e.,* stocks, bonds and money market instruments) but using slightly different mixes of those asset classes. Each C&G Substitution Affected Portfolio seeks a high total return by investing in a mix of debt and equity securities that covers a continuum, with the Total Return Portfolio's mix falling in between the Conservative Investors Portfolio, which tends to invest more in fixed-income and less in equity securities, and the Growth Investors Portfolio, which tends to invest more in equity and less in fixed-income securities. Applicants represent that each of the C&G Substitution Affected Portfolios periodically adjusts its asset mixes in response to Alliance's judgment with respect to economic and market cycles.

14. Applicants represent that all three MM Substitution Affected Portfolios seek high current income by investing either completely or predominately in money market instruments. Each MM Substitution Affected Portfolio invest in, *inter alia,* (a) certificates of deposit and bankers' acceptances and interest-bearing savings deposits issued or guaranteed by banks or savings and loan associations, (b) high-quality commercial paper issued by U.S. or

foreign companies, and (c) certain types of U.S. Government securities.

15. Applicants represent that the Variable Insurers are no longer offering the Replaced Portfolios as investment options under new insurance contracts, and these Portfolios are unlikely to attract other insurance companies to utilize them as funding vehicles for variable products and therefore are unlikely to grow in the future.

16. Applicants represent that as of December 31, 1999, the total net assets of the portfolios were as follows (in millions):

	Total net assets
Replaced Portfolio:	
Conservative Investors Portfolio	$31
Growth Investors Portfolio	19
Multi-Market Portfolio	44
Substitute Portfolio:	
Total Return Portfolio	75
Money Market Portfolio	136
Money Fund	201

17. Applicants represent that, for the fiscal year ended December 31, 1999, the portfolios' expenses were as follows:

Replaced portfolio	Advisory fees	Other expenses	Total expenses	Fee waivers and/or reimbursements	Net expenses
Conservative Investors Portfolio	0.75	0.42	1.17	0.22	0.95
Growth Portfolio	0.75	0.72	1.47	0.52	0.95
Multi-Market Portfolio	0.55	2.10	2.65	1.70	0.95

Substitute portfolio	Advisory fees	Other expenses	Total expenses	Fee waivers and/or reimbursements	Net expenses
Total Return Portfolio	0.63	0.24	0.86	0.00	0.86
Money Market Portfolio	0.50	0.14	0.64	0.00	0.64
Money Fund	0.45	0.03	0.48	0.00	0.48

18. Applicants represent that Alliance has agreed to cap expenses for each AVP Substitute Portfolio for one year from the date of the substitutions at a level equal to the percentage expense level experienced by its corresponding Replaced Portfolio for the most recent fiscal year prior to the substitutions. To the extent that the expenses of any Substitute Portfolio exceed the 1999 expense level of a Replaced portfolio for each fiscal period that is no longer than a fiscal quarter during the one-year period following the substitutions, the applicable Insurance Company Applicant(s) will undertake to limit separate account expenses such that, with respect to each contractowner affected by the substitutions, the amount of the relevant surviving portfolio's operating expenses, together with its corresponding separate account's expenses, on an annualized basis, will be no greater than the sum of the corresponding Substitute Portfolio's expenses, together with its separate account's expenses, for the most recent fiscal year prior to the substitutions. Furthermore, the Insurance Company Applicants undertake not to increase account or contract expenses for each contractowner affected by the substitutions for a period of one year from the date of the substitutions.

19. The Insurance Company Applicants represent that owners of the Contracts that invest in the Replaced Portfolios (''C&G Contractowners'' and ''MM Contractowners,'' as appropriate) were sent notice, which disclosed the proposed substitutions, in the form of an amendment to the prospectuses of the relevant Separate Accounts. Within five days after the substitutions, each Insurance Company Applicant will send to its C&G Contractowners and MM Contractowners a second notice of the proposed substitutions (''Second Notice'') that will indicate that shares of the Replaced Portfolios have been eliminated and that shares of the Substitute Portfolios, as applicable, have been substituted. To the extent required, each Insurance Company Applicant will include in such mailing a supplement to the prospectus of AVP that discloses the completion of the substitutions.

20. Applicants represent that C&G Contractowners and MM Contractowners will be advised in each Second Notice that they may transfer the value of their Contracts allocable to the Substitute Portfolios to any other available Separate Accounts or Divisions investing in the other AVP Portfolios or other investment options unrelated to AVP, without limitation, within sixty days after the date of the Second Notice free of charge. A copy of the current prospectus of each relevant Substitute Portfolio will be delivered to each Contractowner to whom such current prospectus has not already been delivered. The C&G Substitution and/or the MM Substitution will not be counted as a transfer under any contractual provisions of the contracts that limit allowable transfers.

21. Applicants represent that following the C&G and MM Substitutions, the C&G and MM Contractowners will be afforded the same contract rights that they currently have, including surrender and other transfer rights with regard to amounts invested under the Contracts. The C&G Substitution and the MM Substitution will have no adverse federal income tax consequences for C&G and MM Contractowners. In addition, the C&G Substitution and the MM Substitution will in no way alter the insurance benefits to C&G and MM Contractowners or the contractual obligations of AIG, American and/or ReliaStar.

22. Applicants represent that the proposed substitutions will take place at relative net asset value with no increase or decrease in the amount of policy value for any C&G or MM Contractowner. In addition, the substitutions will not result in any additional fees for C&G or MM Contractowners, nor will current charges be increased. Applicants also represent that the costs of the C&G Substitution and the MM Substitution, including any additional brokerage costs or expenses, will not be borne directly or indirectly by the C&G Contractowners or MM Contractowners.

23. Applicants anticipate that the relevant Separate Accounts will redeem, partly for cash and partly for securities as a redemption in-kind, all shares of the Conservative Investors Portfolio and the Growth Investors Portfolio attributable to C&G Contractowners at the close of business on the date

selected for the substitutions. Applicants represent that the Conservative Investors Portfolio and the Growth Investors Portfolio will effect the redemptions in-kind to the extent that the securities paid on redemption to the relevant Separate Accounts have characteristics that are consistent with the investment objective and diversification requirements applicable to the Total Return Portfolio. Applicants further represent that the in-kind redemptions and purchases will be effected pursuant to AVP's procedures for valuing portfolio securities and that portfolio securities of the Substitute and Replaced Portfolios will be valued consistently.

Applicant's Legal Analysis

1. Applicants request that the Commission issue an order pursuant to Section 26(b) of the 1940 Act permitting the Separate Accounts (a) to substitute shares of the Total Return Portfolio for shares of the Conservative Investors Portfolio and the Growth Investors Portfolio held by Separate Accounts, and (b) to substitute shares of the Money Market Portfolio or the Money Fund, as applicable, for shares of the Multi-Market Portfolio held by the Separate Accounts.

2. Section 26(b) of the 1940 Act requires the depositor of a registered unit investment trust holding the securities of a single issuer to receive Commission approval before substituting the securities held by the trust. Section 26(b) also states that the Commission shall issue an order approving such substitution if the evidence establishes that it is consistent with the protection of investors and the purposes fairly intended by the policy and provisions of the 1940 Act.

3. Applicants represent that AIG and American believe that the C&G Substitution is consistent with the interests of its Contractowners because, although they follow different asset allocation models, there are substantial similarities between the types of investments made by the Conservative Investors Portfolio, the Growth Investors Portfolio and the Total Return Portfolio. Furthermore, Applicants argue that the C&G substitution is expected to confer economic benefits on the C&G Contractowners because the Conservative Investors Portfolio's and the Growth Investors Portfolio's expenses and net redemptions are expected to make it increasingly difficult for those Portfolios to achieve competitive results, because operation of the consolidated C&G Substitution Affected Portfolios (*i.e.,* the Return Portfolio going forward) will result in economies of scale and reduced operating expenses as a result of lower management fees paid by the Total Return Portfolio, and because the size of the Total Return Portfolio suggests that the Total Return Portfolio will offer a more favorable opportunity for achieving a substantially similar investment objective while bearing lower expenses than each of the Conservative Investors Portfolio and the Growth Investors Portfolio has borne.

4. Applicants also argue that the MM Substitution is expected to confer economic benefits on the MM Contractowners because the Multi-Market Portfolio's expenses and net redemptions are expected to make it increasingly difficult for that Portfolio to achieve competitive results, because operation of the consolidated MM Substitution Affected Portfolios (*i.e.,* the Money Market Portfolio and Oppenheimer Money Fund going forward) will result in economies of scale and reduced operating expenses as a result of lower management fees paid by the Money Market Portfolio and the Oppenheimer Money Fund, and because the size of the Money Market Portfolio and the Oppenheimer Money Fund, their competitive returns and their historically higher total returns suggest that each of the Money Market Portfolio and the Oppenheimer Money Fund will offer a more favorable long-term opportunity for achieving a substantially similar investment objective while bearing lower expenses than the Multi-Market Portfolio has borne.

5. Section 17(a)(1) of the 1940 Act prohibits any affiliated person of a registered investment company, or an affiliate of such affiliated person, from selling any security or other property to such registered investment company. Section 17(a)(2) of the 1940 Act prohibits any affiliated person from purchasing any security or other property from such registered investment company.

6. AIG, Variable Account I, American, Variable Account A, and AVP (collectively, the ''Section 17 Applicants'') request an order of the Commission pursuant to Section 17(b) of the 1940 Act exempting them from the provisions of Section 17(a) of the 1940 Act. Section 17(b) of the 1940 Act provided that the Commission may grant an order exempting a proposed transaction from Section 17(a) of the 1940 Act if evidence establishes that: (a) The terms of the proposed transaction, including the consideration to be paid or received, are fair and reasonable and do not involve overreaching on the part of any person concerned; (b) the proposed transaction is consistent with the policy of each registered investment company concerned; and (c) the proposed transaction is consistent with the general purposes of the 1940 Act.

7. The Section 17 Applicants assert that the terms of the C&G Substitution, including the consideration to be paid or received in connection with such Substitution, meet all of the requirements of Section 17(b). First, the Section 17 Applicants contend that the terms of the C&G Substitution are reasonable and fair and do not involve overreaching on the part of any person concerned. The Section 17 Applicants represent that the C&G Substitution will be effected pursuant to AVP's procedures for valuing portfolio securities and that portfolio securities of the Affected Portfolios are and will be valued in a consistent manner. Consequently, the Sections 17 Applicants assert that there will be no overreaching because all securities redeemed in-kind and used to purchase shares of the Total Return Portfolio will be consistently valued for all purposes. Second, the C&G Substitution as proposed is consistent with the investment policies of the C&G Substitution Affected Portfolios because the securities received by the relevant Separate Account from the Conservative Investors Portfolio and the Growth Investors Portfolio from redemptions in-kind will be selected by Alliance to correspond to the investment policies of the Total Return Portfolio. Third, the C&G Substitution is consistent with the general purposes of the 1940 Act because it will provide the C&G Contractowners with economic and other benefits.

Conclusion

Applicants submit that, for all the reasons stated above, the exemptive relief requested pursuant to Section 26(b) of the 1940 Act is necessary and appropriate in the public interest and consistent with the protection of investors and the purposes fairly intended by the policies and provisions of the 1940 Act.

For the Commission, by the Division of Investment Management, pursuant to delegated authority.

Margaret H. McFarland,

Deputy Secretary.

[FR Doc. 00–31445 Filed 12–8–00; 8:45 am]

BILLING CODE 8010–01–M

SECURITIES AND EXCHANGE COMMISSION

[Release No. 34–43646; File No. SR–CBOE–00–53]

Self-Regulatory Organizations; Notice of Filing of Proposed Rule Change by Chicago Board Options Exchange, Inc. Relating to Permanent Approval of Live Ammo to RAES

November 30, 2000.

Pursuant to Section 19(b)(1) of the Securities Exchange Act of 1934 (''Act''),[1] and Rule 19b–4 thereunder,[2] notice is hereby given that on November 8, 2000, the Chicago Board Options Exchange, Inc. (''CBOE'' or ''Exchange'') filed with the Securities and Exchange Commission (''SEC'' or ''Commission'') the proposed rule change as described in Items I, II, and III below, which Items have been prepared by the CBOE. The Commission is publishing this notice to solicit comments on the proposed rule change from interested persons.

I. Self-Regulatory Organization's Statement of the Terms of Substance of the Proposed Rule Change

The Exchange proposes to adopt on a permanent basis the system that allows an Order Book Official (''OBO'') or Designated Primary Market Maker (''DPM'') to designate certain booked orders to be electronically executed against market markers standing in the crowd. The text of the proposed rule change is available at the Office of the Secretary, CBOE and at the Commission.

II. Self-Regulatory Organization's Statement of the Purpose of, and Statutory Basis for, the Proposed Rule Change

In its filing with the Commission, CBOE included statements concerning the purpose of and basis for the proposed rule change and discussed any comments it received on the proposed rule change. The text of these statements may be examined at the places specified in Item IV below. The CBOE has prepared summaries, set forth in sections A, B, and C below, of the most significant aspects of such statements.

A. Self-Regulatory Organization's Statement of the Purpose of, and Statutory Basis for, the Proposed Rule Change

1. Purpose

On February 2, 2000, the Commission approved, on a pilot basis, a systems change that allows an OBO or a DPM to reroute orders on the electronic book screen that displays market orders and limit orders that improve the market (''Live Ammo'') to the Retail Automatic Execution System (''RAES'').[3] On October 31, 2000, the pilot was extended through December 15, 2000.[4]

The Exchange now proposes to make permanent the pilot program with respect to the processing of Live Ammo orders.[5] The Commission recently approved a system enhancement to the Exchange's Order Routing System (''ORS''), which provided for the automatic rerouting of cancel/replace orders.[6] The Exchange believes that this systems change addresses the Commission's expectation that the Exchange develop a system enhancement to ensure that RAES-eligible orders will be routed directly to RAES without the interim step of first appearing on the Live Ammo screen.[7] The Exchange expects that the enhancement to ORS will be implemented in December 2000.

Although the number of Live Ammo orders should be substantially reduced by the planned enhancement to ORS, there occasionally may still be circumstances when the OBO or DPM may have reason to reroute Live Ammo orders manually. For example, in the event that a Floor Broker becomes so busy during heavy trading conditions that he is unable to represent and execute orders in a timely manner, the Floor Broker can electronically book all non-market, non-contingency orders he holds by hitting the ''book all'' button on his PAR workstation. Those orders that are marketable will route to the Live Ammo screen while those that are not marketable will stay in the book. Those orders that route to the Live Ammo screen will still require an OBO or DPM to manually reroute the orders to RAES. Therefore, the Exchange proposes that the Live Ammo to RAES functionality be approved on a permanent basis to deal with such limited circumstances.

2. Basis

The Exchange believes that because the Live Ammo to RAES processing system has provided for the more timely execution of marketable orders, the proposed rule change is consistent with Section 6(b) of the Act,[8] in general, and furthers the objectives of Section 6(b)(5),[9] in particular, because it is designed to foster cooperation and coordination with persons engaged in regulating, clearing, settling, and processing information with respect to, and facilitating transactions in securities, and to remove impediments to and perfect the mechanism of a free and open market and a national market system, and, in general, to protect investors and the public interest.

B. Self-Regulatory Organization's Statement on Burden on Competition

CBOE does not believe that the proposed rule change will impose any burden on competition not necessary or appropriate in furtherance of purposes of the Act.

C. Self-Regulatory Organization's Statement on Comments on the Proposed Rule Change Received From Members, Participants or Others

No written comments were solicited or received with respect to the proposed rule change.

III. Date of Effectiveness of the Proposed Rule Change and Timing for Commission Action

Within 35 days of the date of publication of this notice in the **Federal Register** or within such longer period (i) as the Commission may designate up to 90 days of such date if it finds such longer period to be appropriate and publishes its reason for so finding or (ii) as to which the self-regulatory organization consents, the Commission will:

(a) By order approve such proposed rule change, or

(b) Institute proceedings to determine whether the proposed rule change should be disapproved.

IV. Solicitation of Comments

Interested person are invited to submit written date, views and arguments concerning the foregoing, including whether the proposed rule change is consistent with the Act. Persons making written submissions

[1] 15 U.S.C. 78s(b)(1).

[2] 17 CFR 240.19b–4.

[3] Securities Exchange Act Release No. 42379, 65 FR 6665 (February 10, 2000) (approving SR–CBOE–98–27 on a pilot basis until October 31, 2000) (''Pilot Order'').

[4] Securities Exchange Act Release No. 43499, 65 FR 67023 (November 8, 2000).

[5] The Exchange rule pertaining to the processing of Live Ammo orders is CBOE Rule 7.4(g).

[6] Securities Exchange Act Release No. 43185 (August 21, 2000), 65 FR 51884 (August 25, 2000).

[7] *See* Pilot Order, note 3 *supra.*

[8] 15 U.S.C. 78f(b).

[9] 15 U.S.C. 78f(b)(5).

should file six copies thereof with the Secretary, Securities and Exchange Commission, 450 Fifth Street, NW., Washington, DC 20549–0609. Copies of the submission, all subsequent amendments, all written statements with respect to the proposed rule change that are filed with the Commission, and all written communications relating to the proposed rule change between the Commission and any person, other than those that may be withheld from the public in accordance with the provisions of 5 U.S.C. 552, will be available for inspection and copying in the Commission's Public Reference Room. Copies of such filing will also be available for inspection and copying at the principal office of CBOE. All submissions should refer to File No. SR–CBOE–00–53 and should be submitted by January 2, 2001.

For the Commission, by the Division of Market Regulations, pursuant to delegated authority.[10]

Margaret H. McFarland,

Deputy Secretary.

[FR Doc. 00–31383 Filed 12–8–00; 8:45 am]

BILLING CODE 8010–01–M

SECURITIES AND EXCHANGE COMMISSION

[Release No. 34–43638; File No. SR–CBOE–00–57]

Self-Regulatory Organizations; Notice of Filing of Proposed Rule Change by the Chicago Board Options Exchange, Incorporated Relating to the Prohibition Against Electronically Generated and Communicated Orders

November 29, 2000.

Pursuant to Section 19(b)(1) of the Securities Exchange Act of 1934,[1] (''Act'') and Rule 19b–4 thereunder,[2] notice is hereby given that on November 13, 2000, the Chicago Board Options Exchange, Incorporated (''CBOE'' or ''Exchange'') filed with the Securities and Exchange Commission (''Commission'') the proposed rule change as described in Items I, II and III below, which Items have been prepared by the CBOE. The Commission is publishing this notice to solicit comments on the proposed rule change from interested persons.

I. Self-Regulatory Organization's Statement of the Terms of Substance of the Proposed Rule Change

The Exchange proposes to amend CBOE Rule 6.8A, which governs the entry of electronically generated and communicated orders. Pursuant to the proposed amendment, an order would be deemed electronically generated and communicated for purposes of the Rule even if a practice requiring minimal human intervention has been added to the process of electronically generating and communicating the order.

The text of the proposed rule change is available at the Office of the Secretary, CBOE and at the Commission.

II. Self-Regulatory Organization's Statement of the Purpose of, and Statutory Basis for, the Proposed Rule Change

In its filing with the Commission, the CBOE included statements concerning the purpose of and basis for the proposed rule change and discussed any comments it received on the proposed rule change. The text of these statements may be examined at the places specified in Item IV below. The CBOE has prepared summaries, set forth in sections A, B, and C below, of the most significant aspects of such statements.

A. Self-Regulatory Organization's Statement of the Purpose of, and Statutory Basis for, the Proposed Rule Change

1. Purpose

On September 12, 2000, the Commission approved a proposed rule change filed by the Exchange that prohibits the entry of certain options orders that are created and communicated electronically, without manual input, into the CBOE's Order Routing System (''ORS'').[3] Specifically, the new Rule (CBOE Rule 6.8A) provides that members may not enter nor permit the entry of, orders into ORS if those orders are created and communicated electronically without manual input and if such orders are eligible for execution on Retail Automatic Execution System (''RAES'') at the time they are sent.[4] To be permitted under the Rule, order entry by public customers or associated persons of members must involve manual input, such as entering the terms of an order into an order-entry screen or manually selecting a displayed order against which an off-setting order should be sent.

In its Order approving CBOE Rule 6.8A,[5] the Commission noted that allowing the entry of electronically generated and communicated orders could undercut CBOE's business model.[6] As CBOE Rule 6.8A is currently drafted, however, it is the Exchange's view that the Rule is capable of being easily undermined. Professional traders that have developed or purchased software to electronically generate and communicate orders can easily install a simple manual step into the process in order to avoid a violation of the Rule. In fact, the Exchange has learned that professional traders have had persons enter a keystroke to electronically generate and communicate orders to an exchange's order routing system in order to circumvent the prohibition against such orders that have been adopted by other exchanges.

The one comment letter submitted to the Commission on the Exchange's proposed rule change adopting the CBOE Rule 6.8A made this same point.[7] The commenter noted, ''[t]he CBOE should be free to interpret its prohibition against electronically generated and submitted orders to include orders with nominal or minimal human intervention. Otherwise, CBOE's proposal could be completely undermined.''[8]

The Exchange believes that its proposed new interpretation to Rule 6.8A is an appropriate response to the potential harm that could result to its business model from those persons who can easily avoid violations of the Rule as it currently stands. The Exchange does not believe it is enough to simply prohibit orders that are sent by the entry of a single keystroke because those

---

[10] 17 CFR 200.30–3(a)(12).

[1] 15 U.S.C. 78s(b)(1).

[2] 17 CFR 240.19b–4.

[3] *See* Securities Exchange Act Release No. 43285 (September 12, 2000), 65 FR 56972 (September 20, 2000) (SR–CBOE–00–01). The Exchange's rule is similar to a rule of the International Securities Exchange (''ISE'') that the Commission approved earlier. When the Commission approved ISE's application for Exchange registration, it also approved several ISE rules, including ISE Rule 717(f) regarding the entry of computer-generated orders. *See* Securities Exchange Act Release No. 42455 (February 24, 2000), 65 FR 11401 (March 2, 2000).

[4] CBOE Rule 6.8A clarifies that an order is eligible for execution on RAES if: (1) Its size is equal to or less than the maximum RAES order size for the particular option series; (2) the order is marketable or is tradable pursuant to the RAES auto step-up feature at the time it is sent; and (3) the order has either no contingency or has a contingency that is accepted for execution by RAES.

[5] *See* note 3, *supra.*

[6] Specifically, the Commission noted: '' * * * the Commission recognizes that the CBOE's business model depends on market makers for competition and liquidity. Allowing electronic order entry into ORS could give automated customers a significant advantage over market makers. This could undercut CBOE's business model.'' *Id.* at 56973.

[7] Letter from Joel Greenberg, Managing Director, Susquehanna Investment Group, to Jonathan G. Katz, Secretary, Commission, dated August 29, 2000.

[8] *Id.* at p. 3.

professional traders who determine to send electronically generated orders would, thus, be able to avoid violations by inputting two keystrokes or by inputting one touch of a computer screen. Consequently, the proposed interpretation provides some leeway for the Exchange to determine what constitutes minimal human intervention.

The Exchange will be willing to provide interpretive guidance to its members in order to help them determine what type of action will be deemed to be minimal human intervention and what type of activity will not be considered minimal human intervention. The Exchange will also be willing to provide advice to its members about whether a particular surveillance mechanism to detect violations of this Rule by its customers is adequate.

2. Statutory Basis

The proposed rule change is consistent with and furthers the objectives of Section 6(b)(5) of the Act [9] in that it is designed to remove impediments to a free and open market and protecting investors and the public interest.

B. Self-Regulatory Organization's Statement on Burden on Competition

The CBOE does not believe that the proposed rule change will impose any burden on competition that is not necessary or appropriate in furtherance of the Act.

C. Self-Regulatory Organization's Statement on Comments on the Proposed Rule Change Received From Members, Participants, or Others

No written comments were solicited or received with respect to the proposed rule change.

III. Date of Effectiveness of the Proposed Rule Change and Timing for Commission Action

Within 35 days of the date of publication of this notice in the **Federal Register** or within such longer period (i) as the Commission may designate up to 90 days of such date if it finds such longer period to be appropriate and publishes its reasons for so finding or (ii) as to which the self-regulatory organization consents, the Commission will:

(A) by order approve such proposed rule change, or

(B) institute proceedings to determine whether the proposed rule change should be disapproved.

[9] 15 U.S.C. 78f(b)(5).

IV. Solicitation of Comments

Interested persons are invited to submit written data, views and arguments concerning the foregoing, including whether the proposed rule change is consistent with the Act. Persons making written submissions should file six copies thereof with the Secretary, Securities and Exchange Commission, 450 Fifth Street, NW., Washington, DC 20549–0609. Copies of the submission, all subsequent amendments, all written statements with respect to the proposed rule change that are filed with the Commission, and all written communications relating to the proposed rule change between the Commission and any person, other than those that may be withheld from the public in accordance with the provisions of 5 U.S.C. 552, will be available for inspection and copying in the Commission's Public Reference Section. Copies of such filing will also be available for inspection and copying at the principal office of CBOE. All submissions should refer to the File Number SR–CBOE–00–57 and should be submitted by January 2, 2001.

For the Commission, by the Division of Market Regulation, pursuant to delegated authority.[10]

Margaret H. McFarland,

Deputy Secretary.

[FR Doc. 00–31387 Filed 12–8–00; 8:45 am]

BILLING CODE 8010–01–M

[10] 17 CFR 200.30–3(a)(12).

SECURITIES AND EXCHANGE COMMISSION

[Release No. 34–43654; File No. SR–NASD–00–70]

Self-Regulatory Organizations; Notice of Filing and Immediate Effectiveness of Proposed Rule Change by the National Association of Securities Dealers, Inc. Relating to the Extension of the Effective Date of Phase Three for Order Audit Trail System Rules

December 1, 2000.

Pursuant to Section 19(b)(1) of the Securities Exchange Act of 1934 (''Act''),[1] and Rule 19b–4 thereunder,[2] notice is hereby given that on November 30, 2000, the National Association of Securities Dealers, Inc. (''NASD'' or ''Association''), through its wholly-owned subsidiary, NASD Regulation, Inc. (''NASD Regulation'') filed with the Securities and Exchange Commission (''SEC'' or ''Commission'') the proposed rule change as described in Items, I, II, and III below, which Items have been prepared by NASD Regulation. The Commission is publishing this notice to solicit comments on the proposed rule change from interested persons.

[1] 15 U.S.C. 78s(b)(1).

[2] 17 CFR 240.19b–4.

I. Self-Regulatory Organization's Statement of the Terms of Substance of the Proposed Rule Change

NASD Regulation proposes to amend Rule 6957 to extend the effective date of the implementation of Phase Three of the Order Audit Trail System (''OATS'') rules until 120 days after the SEC approves File No. SR–NASD–00–23,[3] which also proposes changes to the OATS rules. The text of the proposed rule change is available at the Office of the Secretary, NASD Regulation and the Commission.

II. Self-Regulatory Organization's Statement of the Purpose of, and Statutory Basis for, the Proposed Rule Change

In its filing with the Commission, NASD Regulation included statements concerning the purpose of and basis for the proposed rule change and discussed any comments it received on the proposed rule change. The text of these statements may be examined at the places specified in Item IV below. NASD Regulation has prepared summaries, set forth in sections A, B, and C below, of the most significant aspects of such statements.

A. Self-Regulatory Organization's Statement of the Purpose of, and Statutory Basis for, the Proposed Rule Change

1. Purpose

On March 6, 1998, the SEC approved NASD OATS Rules 6950 through 6957.[4] OATS provides a substantially enhanced body of information regarding orders and transactions that improves NASD Regulation's ability to conduct surveillance and investigations of member firms for violations of Association rules. In addition, OATS is intended to fulfill one of the undertakings contained in the order issued by the SEC relating to the settlement of an enforcement action against the NASD for failure to adequately enforce its rules.[5] Pursuant to the SEC Order, OATS is required, at

[3] *See* Exchange Act Release No. 43344 (September 26, 2000), 65 FR 59038 (October 3, 2000).

[4] *See* Exchange Act Release No. 39729, 63 FR 12559 (March 13, 1998) (order approving File No. SR–NASD–97–56).

[5] *See* In the Matter of National Association of Securities Dealers, Inc., Exchange Act Release No. 37538 (August 8, 1996); Administrative Proceeding File No. 3–9056 (''SEC Order'').

a minimum, to (1) provide an accurate, time-sequenced record of orders and transactions, beginning with the receipt of an order at the first point of contact between the broker/dealer and customer or counterparty and further documenting the life of the order through the process of execution, and (2) provide for market-wide synchronization of clocks used in connection with the audit trail.[6]

In general, OATS imposes obligations on member firms to record in electronic form and to report to NASD Regulation certain information with respect to orders originated, received, transmitted, modified, canceled, or executed (''reportable events'') by NASD members relating to a Nasdaq Stock Market, Inc. (''Nasdaq'') equity security. This information is integrated with quote information and transaction information reported to the Automated Confirmation Transaction Service (''Act'')[7] to provide the Association with an accurate, time-sequenced record of orders and other transactions.

The effective dates for OATS requirements are set forth in NASD Rule 6957, which provides for different phases of implementation. All members were required to synchronize their computer system clocks and all mechanical clocks that record times for regulatory purposes by August 7, 1998, and July 1, 1999, respectively. In addition, the implementation schedule required that electronic orders received at the trading department of a member that is a market maker in the subject securities and those received by electronic communications networks (''ECNs'') be entered into OATS as of March 1, 1999 (''Phase One''). Not all information relating to electronic orders received by market makers was required to be reported to OATS during Phase One. Information items relating to all electronic orders, however, was required to be reported to OATS by August 1, 1999 (''Phase Two''). Under the current implementation schedule, the OATS rules will apply to all manual orders on December 15, 2000 (''Phase Three'').[8]

Since the implementation of OATS, NASD Regulation has been closely reviewing OATS activities with the goal of identifying ways in which to improve OATS and enhance the effectiveness of OATS as a regulatory tool. In this regard, NASD Regulation has proposed certain changes to OATS that it believes will enhance NASD Regulation's automated surveillance for compliance with trading and market making rules such as the NASD's Limit order Protection Interpretation, the SEC's Order Handling Rules, and a member firm's best execution obligations.[9]

Several of these proposed changes would alter the requirements that will become effective as part of Phase Three under current OATS Rules. For example, one proposed change would require that a different order origination and receipt time be recorded and reported for certain orders. Another proposed amendment would change the definition of reporting member, which would eliminate OATS reporting requirements for certain firms. To provide adequate time for these proposed changes to be considered and potentially acted upon, NASD Regulation is proposing that the effective date of Phase Three implementation be 120 days after the SEC approves File No. SR–NASD–00–23.[10] NASD Regulation believes that by linking the effective date of Phase Three to SEC approval of pending proposed changes to OATS rules, members will be provided sufficient time to implement internal systems programming and other changes resulting from the rule change.

2. Statutory Basis

NASD Regulation believes that the proposed rule change is consistent with the provisions of Section 15A(b)(6) of the Act,[11] which requires, among other things, that the Association's rules be designed to prevent fraudulent and manipulative acts and practices, to promote just and equitable principles of trade, and, in general, to protect investors and the public interest. NASD Regulation believes that extending the effective date of Phase Three implementation of OATS will provide the additional time necessary to fully analyze and consider the proposed changes to OATS rules and determine whether the proposed rule changes are appropriate.

B. Self-Regulatory Organization's Statement on Burden on Competition

NASD Regulation does not believe that the proposed rule change will result in any burden on competition that is not necessary or appropriate in furtherance of the purposes of the Act.

C. Self-Regulatory Organization's Statement on Comments on the Proposed Rule Change Received From Members, Participants or Others

NASD Regulation has neither solicited nor received written comments on the proposed rule change.

III. Date of Effectiveness of the Proposed Rule Change and Timing for Commission Action

Pursuant to Section 19(b)(3)(A) of the Act[12] and Rule 19b–4(f)(6) thereunder,[13] the proposed rule change has become effective upon filing as it effects a change that: (1) Does not significantly affect the protection of investors or the public interest; (2) does not impose any significant burden on competition; and (3) by its terms, does not become operative for 30 days from the date of filing, or such shorter time that the Commission may designate if consistent with the protection of investors and the public interest. NASD Regulation provided the Commission with written notice of its intent to file the proposed rule change at least five business days prior to the filing date and has requested that the Commission accelerate the operative date of the proposal to become effective immediately.

The Commission finds good cause for accelerating the operative date of the proposal as of the date of this notice.[14] In order to prevent unnecessary systems changes, NASD Regulation needs to give its members as much notice as possible that the effective date of Phase Three has been extended. The Commission also notes that the previous proposal to extend the implementation date of Phase Three from October 31, 2000 to December 15, 2000 did not become operative for 30 days from the date of filing, and the Commission received no comments.[15]

[6] *Id.*

[7] ACT is an automated system owned and operated by Nasdaq that captures transaction information in real-time.

[8] On August 31, 2000, NASD Regulation filed a proposed amendment with the Commission for immediate effectiveness to extend the implementation date of Phase Three from October 31, 2000 to December 15, 2000. *See* Exchange Act Release No. 43263 (September 8, 2000), 65 FR 55661 (September 14, 2000).

[9] *See supra* note 3.

[10] In response to the **Federal Register** publication of SR–NASD–00–23, some commenters indicated that members would require 90 days from the date the OATS Technical Specifications are amended to incorporate necessary systems changes resulting from SEC approval of SR–NASD–00–23. In this regard, NASD Regulation believes that the OATS Technical Specifications will be amended within 30 days of SEC approval of SR–NASD–00–23. Accordingly, NASD Regulation believes that 120 days after the date of SEC approval of SR–NASD–00–23 should provide adequate time for the OATS Technical Specifications to be amended and published, and for members to make necessary systems and programming changes.

[11] 15 U.S.C. 78o–3(b)(6).

[12] 15 U.S.C. 78s(b)(3)(A).

[13] 17 CFR 240.16b–4(f)(6).

[14] For purposes only of accelerating the operative date of this proposal, the Commission has considered the proposed rule's impact on efficiency, competition, and capital formation. 15 U.S.C. 78c(f).

[15] *See supra* note 8.

At any time within 60 days of the filing of the proposed rule change, the Commission may summarily abrogate such rule change if it appears to the Commission that such action is necessary or appropriate in the public interest, for the protection of investors, or otherwise in furtherance of the purposes of the Act.

IV. Solicitation of Comments

Interested persons are invited to submit written data, views and arguments concerning the foregoing, including whether the proposed rule change is consistent with the Act. Persons making written submissions should file six copies thereof with the Secretary, Securities and Exchange Commission, 450 Fifth Street, N.W., Washington D.C. 20549–0609. Copies of the submission, all subsequent amendments, all written statements with respect to the proposed rule change that are filed with the Commission, and all written communications relating to the proposed rule change between the Commission and any person, other than those that may be withheld from the public in accordance with the provisions of 5 U.S.C. 552, will be available for inspection and copying in the Commission's Public Reference Room. Copies of such filing will also be available for inspection and copying at the principal office of the NASD. All submissions should refer to File No. SR–NASD–00–70 and should be submitted by January 2, 2001.

For the Commission, by the Division of Market Regulation, pursuant to delegated authority.[16]

Margaret H. McFarland,

Deputy Secretary.

[FR Doc. 00–31384 Filed 12–8–00; 8:45 am]

BILLING CODE 8010–01–M

[16] 17 CFR 200.30–3(a)(12).

SECURITIES AND EXCHANGE COMMISSION

[Release No. 34–43647; File No. SR–NYSE–00–52]

Self-Regulatory Organizations; Notice of Filing and Immediate Effectiveness of Proposed Rule Change by the New York Stock Exchange, Inc. To Extend the Pilot Regarding Shareholder Approval of Stock Option Plans Through February 28, 2001

November 30, 2000.

Pursuant to Section 19(b)(1) of the Securities Exchange Act of 1934 (''Act),'' [1] and Rule 19b–4 thereunder,[2] notice is hereby given that on November 29, 2000, the New York Stock Exchange, Inc. (''NYSE'' or ''Exchange'') filed with the Securities and Exchange Commission (''SEC'' or ''Commission'') the proposed rule change as described in items I, II, and III below, which items have been prepared by the Exchange. The Commission is publishing this notice to solicit comments on the proposed rule change from interested persons.

I. Self-Regulatory Organization's Statement of the Terms of Substance of the Proposed Rule Change

The Exchange is proposing to extend, until February 28, 2001, the effectiveness of the amendments to Sections 312.01, 312.03 and 312.04 of the Exchange's Listed Company Manual with respect to the definition of a ''broadly-based'' stock option plan, which were approved by the Commission on a pilot basis (''Pilot'') on June 4, 1999.[3]

II. Self-Regulatory Organization's Statement of the Purpose of, and Statutory Basis for the Proposed Rule Change

In its filing with the Commission, the Exchange included statements concerning the purpose of and basis for the proposed rule change and discussed any comments it received on the proposed rule change. The text of these statements may be examined at the places specified in item IV below. The Exchange has prepared summaries, set forth in Sections A, B, and C below, of the most significant aspects of such statements.

A. Self-Regulatory Organization's Statement of the Purpose of, and Statutory Basis for, the Proposed Rule Change

1. Purpose

On July 12, 2000, the Exchange filed a proposed rule change seeking to extend the effectiveness of the Pilot until September 30, 2003.[4] On August 15, 2000, the Commission, in response to a commenter's request, extended the comment period for the 3-Year Extension Proposal until September 20, 2000.[5] On September 22, 2000, the Pilot was extended through November 30, 2000 to accommodate the extended comment period on the 3-Year Extension Proposal.[6]

The Exchange now proposes to further extend the effectiveness of the Pilot until February 28, 2001 to provide the Commission and the Exchange with additional time to review and evaluate comment letters submitted to the Commission regarding the 3-Year Extension Proposal.

2. Basis

The Exchange believes that the proposed rule change is consistent with the requirements of Section 6(b)(5) [7] of the Act because it is designed to prevent fraudulent and manipulative acts and practices, to promote just and equitable principles of trade, to foster cooperation and coordination with persons engaged in facilitating transactions in securities, to remove impediments to and perfect the mechanism of a free and open market and a national market system and, in general, to protect investors and the public interest.

B, Self-Regulatory Organization's Statement on Burden on Competition

The Exchange does not believe that the proposed rule change will impose any burden on competition that is not necessary or appropriate in furtherance of the purposes of the Act.

C. Self-Regulatory Organization's Statement on Comments on the Proposed Rule Change Received From Members, Participants or Others

The Exchange has neither solicited nor received written comments on the proposed rule change.

III. Date of Effectiveness of the Proposed Rule Change and Timing for Commission Action

Because the proposed rule change (1) does not significantly affect the protection of investors or the public interest; (2) does not impose any significant burden on competition; and (3) does not become operative for 30 days from the date of filing, or such shorter time as the Commission may designate if consistent with the protection of investors and the public interest, the proposed rule change has become effective pursuant to Section

[1] 15 U.S.C. 78s(b)(1).

[2] 17 CFR 240.19b–4.

[3] Securities Exchange Act Release No. 41479, 64 FR 31667 (June 11, 1999).

[4] Securities Exchange Act Release No. 43111 (August 2, 2000), 65 FR 49046 (August 10, 2000) (''3-Year Extension Proposal'').

[5] Securities Exchange Act Release No. 43155, 65 FR 49046 (August 23, 2000). The original comment period was schedule to expire on August 31, 2000. *See* 3-Year Extension Proposal, *supra* note 4.

[6] Securities Exchange Act Release No. 43329, 65 FR 58833 (October 2, 2000).

[7] 15 U.S.C. 78f(b)(5).

19(b)(3)(A)[8] of the Act and Rule 19b–4(f)(6)[9] thereunder.[10]

A proposed Rule change filed under rule 19b–4(f)(6)[11] normally does not become operative prior to 30 days after the date of filing. However, Rule 19b–4(f)(6)(iii)[12] permits the Commission to designate a shorter time if such action is consistent with the protection of investors and public interest. The Exchange seeks to have the proposed rules change become operative on or before November 30, 2000, in order to allow the Pilot to continue in effect on an uninterrupted basis.

The Commission, consistent with the protection of investors and the public interest, has determined to make the proposed rule change operative immediately through November 30, 2000. The extension of the Pilot will provide the Commission with additional time to review and evaluate the 3-Year Extension Proposal.

The Commission notes that unless the Pilot is extended, the Pilot will expire and the provisions in Sections 312.01, 312.03 and 312.04 of the Exchange's Listed Company Manual that were amended in the Pilot will revert to that which were effective prior to June 4, 1999. The Commission believes that such a result could lead to confusion.

Based on these reasons, the Commission believes that it is consistent with the protection of investors and the public interest that the proposed rule change become operative immediately through February 28, 2001. At any time within 60 days of the filing of the proposed rule change, the Commission may summarily abrogate such rule change if it appears to the Commission that such action is necessary or appropriate in the public interest, for the protection of investors, or otherwise in furtherance of the purposes of the Act.

IV. Solicitation of Comments

Interested persons are invited to submit written data, views and arguments concerning the foregoing, including whether the proposal is consistent with the Act. Persons making written submissions should file six copies thereof with the Secretary, Securities and Exchange Commission, 450 Fifth Street NW., Washington, DC 20549–0609. Copies of the submission, all subsequent amendments, all written statements with respect to the proposed rule change that are filed with the Commission, and all written communications relating to the proposed rule change between the Commission and any person, other than those that may be withheld from the public in accordance with the provisions of 5 U.S.C. 552, will be available for inspection and copying in the Commission's Public Reference Room. Copies of such filing will also be available for inspection and copying at the principal office of the Exchange. All submissions should refer to File No. SR–NYSE–00–52 and should be submitted by January 2, 2001.

For the Commission, by the Division of Market Regulation, pursuant to delegated authority.[13]

Margaret H. McFarland,

Deputy Secretary.

[FR Doc. 00–31385 Filed 12–8–00; 8:45 am]

BILLING CODE 8010–01–M

[8] 15 U.S.C. 78s(b)(3)(A).

[9] 17 CFR 240.19b–4(f)(6).

[10] As required under Rule 19b–4(f)(6)(iii), the Exchange provided the Commission with written notice of its intent to file the proposed rule change at least five business days prior to the filing date or such shorter time as designated by the Commission.

[11] 17 CFR 240.19b–4(f)(6).

[12] 17 CFR 240.19b–4(f)(6)(iii).

[13] 17 CFR 200.30–3(a)(12).

SECURITIES AND EXCHANGE COMMISSION

[Release No. 34–43658; File No. SR–NYSE–00–53]

Self-Regulatory Organizations; Notice of Filing and Order Granting Accelerated Approval of a Proposed Rule Change by the New York Stock Exchange, Inc. Relating to the Listing and Trading of an Exchange Traded Fund Based on the S&P Global 100 Index

December 1, 2000.

Pursuant to Section 19(b)(1) of the Securities Exchange Act of 1934 (''Act'')[1] and Rule 19b–4 thereunder,[2] notice is hereby given that on November 29, 2000, the New York Stock Exchange, Inc. (''NYSE'' or ''Exchange'') filed with the Securities and Exchange Commission (''SEC'' or ''Commission'') the proposed rule change as described in Items I, II, and III below, which Items have been prepared by the Exchange. The Commission's is publishing this notice to solicit comments on the proposed rule change from interested persons and to approve the proposal on an accelerated basis.

I. Self-Regulatory Organization's Statement of the Terms of Substance of the Proposed Rule Change

The Exchange proposes to list and trade shares of an exchange traded fund (the ''Fund'') based on the S&P Global 100 Index.[3] The Exchange is also proposing the amend NYSE Rule 13 to reflect procedures with respect to stop and stop limit orders for Investment Company Units traded on the Exchange. The text of the proposed rule change is available at the Office of the Secretary, the Exchange or the Commission.

II. Self-Regulatory Organization's Statement of the Proposed of, and Statutory Basis for, the Proposed Rule Change

In its filing with the Commission, the Exchange included statements concerning the purpose of, and basis for, the proposed rule change and discussed any comments it received on the proposed rule change. The test of these statements may be examined at the places specified in item IV below. The Exchange has prepared summaries, set forth in sections A, B, and C below, of the most significant aspects of such statements.

A. Self-Regulatory Organization's Statement of the Purpose of, and Statutory Basis for, the Proposed Rule Change

1. Purpose

The Exchange proposes to list and trade under Section 703.16, Investment Company Units of the LCM, shares of the Fund based on the S&P Global 100 Index (the ''Index'' or the ''Underlying Index''). The Fund is included in the Share Trust (the ''Trust''),[4] and Barclays Global Fund Advisors (''BGFA''), a subsidiary of Barclays Global Investors, N.A. (''BGI''), acts as the advisor (the ''Advisor'') to the Fund. Standard & Poor's (''S&P''), a division of The McGraw-Hill Companies, Inc., is the Index provider. The Index is sponsored by S&P and the Exchange, with the additional collaboration of several major exchanges from around the world.[5]

The underlying index. A detailed description of the Underlying Index for the Fund prepared by S&P was filed as Exhibit 2. This description includes, but

[1] 15 U.S.C. 78s(b)(1).

[2] 17 CFR 240.19b–4.

[3] The Fund will be listed and traded pursuant to Section 703.16, Investment Company Units, of the Exchange's Listed Company Manual (''LCM'').

[4] The Trust is registered under the Investment Company Act of 1940, as amended (''1940 Act''). The Trust has filed with the Commission a Registration Statement on the Form N–1/A under the Securities Act of 1933, as amended and under the 1940 Act relating to the Fund (File No. 333–92935 and 811–09729).

[5] The Index was developed jointly by S&P and the Exchange, and the Exchange is represented on, although it does not control, the S&P committee responsible for Index maintenance. The Commission notes that the firewall provisions proposed in SR–NYSE–00–46 will apply to this Investment Company Unit.

is not limited to, information regarding index description, component selection criteria, country representation, Index maintenance and industry group distribution by market capitalization. The Index description, including any changes thereto, may be found on the S&P Global web site at http://www.spglobal.com/ssindexmainglobal100.html.

General description of the fund. The Fund offers and issues shares (''Fund Shares'') at their net asset value (''NAV'') only in aggregations of a specified number of Fund Shares (referred to as a ''Creation Unit''), generally in exchange for a basket of equity securities included in the Underlying Index (the ''Deposit Securities''), together with the deposit of a specified cash payment (the ''Cash Component'').[6] Fund Shares are redeemable only in Creation Unit aggregations, and, generally, in exchange for portfolio securities and a specified cash payment. Creation Units are aggregations of 50,000 Fund Shares. The Trust reserves the right to offer a ''cash'' option for creations and redemptions of Fund Shares.

''Passive'' or indexing investment approach. The Fund seeks investment results that before expenses correspond generally to the price and yield performance of companies in the Index.

The Advisor uses a ''passive'' or indexing approach in seeking to achieve the Fund's investment objective.

Representative sampling. The Fund uses representatives sampling to track the Underlying Index. This means that the Fund is invested in a representative sample of stocks in the Underlying Index, which have a similar investment profile as the Underlying Index. Stocks selected have aggregate investment characteristics (based on market capitalization and industry weightings), fundamental characteristics (such as return variability, earnings valuation and yield), and liquidity measures similar to those of the relevant Underlying Index. A fund that uses representatives sampling generally does not hold all of the stocks included in its underlying index.

The Fund will invest at least 90% of its total assets in the stocks of the Underlying Index. The Fund may hold up to 10% of its total assets in stocks not included in the Underlying Index. For example, the Advisory may invest in stocks not included in the Underlying Index in order to reflect various corporate actions (such as mergers) and other changes in the Underlying Index (such as reconstitutions, additions and deletions). The Fund may also invest in stocks outside the underlying Index to meet the diversification requirements of a regulated investment company under the Internal Revenue Code (the ''Code'').[7] As long as the Fund invests at least 90% of its total assets in the stocks of the Underlying Index, it may also invest its other assets in futures contracts, options on futures contracts, options, and swaps related to the Underlying Index, as well as cash and cash equivalents.

Correlation. An index is a theoretical financial calculation while the ETF is an actual investment portfolio. The performance of the Fund and the Underlying Index will vary somewhat due to transaction costs, market impact, corporate actions (such as mergers and spin-offs) and timing variances. It is expected that over time, the correlation between the Fund's performance and that of the Underlying Index, before fees and expenses, will be 95% or better. A figure of 100% would indicate perfect correlation. Any correlation of less than 100% is called a ''tracking error.''

Industry concentration policy. The Fund will not concentrate its investments (*i.e.,* hold 25% or more of its total assets in the stocks of a particular industry or group of industries). However, the Fund will concentrate to approximately the same extent that the Underlying Index concentrates in the stocks of a particular industry or group of industries. For purposes of this limitation, securities of the U.S. Government (including its agencies and instrumentalities), repurchase agreements collateralized by U.S. Government securities, and securities of state or municipal governments and their political subdivisions are not considered to be issued by members of any industry.

Creations and redemptions of fund shares. The Fund Shares are ''created'' at their NAV by specialists, large investors and institutions only in Creation Units of 50,000 Shares. A ''creator'' deposits into the Fund a specified portfolio of stocks closely approximating the holdings of the Fund (the ''Deposit Securities'') and a specified amount of cash (the ''Cash Component'') in exchange for 50,000 Fund Shares.

Similarly, the Fund Shares can only be redeemed in Creation Units of 50,000 Fund Shares, principally in-kind for a specified portfolio of stocks held by the Fund then comprising the Deposit Securities and the then applicable Cash Component. Except when aggregated in Creation Units, Fund Shares are not redeemable. The prices at which creations and redemptions occur are based on the next calculation of NAV after an order is received in proper form.

Creations and redemptions must be made through a firm that is either a member of the Continuous Net Settlement System of the National Securities Clearing Corporation (''NSCC'') or a Depository Trust Company (''DTC'') participant and, in each case, must have executed an agreement with the Distributor with respect to creations and redemptions of Creation Unit aggregations (''Participant Agreement''). The Trust will impose transaction fees in connection with creation and redemption transactions.

Availability of information regarding fund shares and underlying indices. The list of names and amount of each security constituting the current Deposit Securities, and the Cash Component effective as of the previous business day, per outstanding share of the Fund, will be made available each business day. In addition, an amount representing the sum of the estimated Cash Component effective through and including the previous business day, plus the current value of the Deposit Securities in U.S. dollars, on a per share basis is expected to be disseminated every 15 seconds during the Exchange's regular trading hours, through the facilities of the Consolidated Tape Association (''CTA'').

The value of the Underlying Index will be updated intra-day on a real-time basis as individual component securities of the Underlying Index

[6] The Cash Component is an amount equal to the Balancing Amount. The ''Balancing Amount'' is an amount equal to the difference between the NAV of the Fund Shares (per Creation Unit) and the ''Deposit Amount.'' The ''Deposit Amount'' is an amount equal to the market value of the Deposit Securities. If the Balancing Amount is a positive number (*i.e.,* the NAV per Creation Unit exceeds the Deposit Amount), the Cash Component will be paid to the Trust by the creator. If the Balancing Amount is a negative number (*i.e.,* the NAV per Creation Unit is less than the Deposit Amount), the creator will receive cash in an amount equal to the differential.

[7] In order for the Fund to qualify for tax treatment as a regulated investment company, it must meet several requirements under the Code. Among these is the requirement that, at the close of each quarter of the Fund's taxable year, (1) at least 50 percent of the market value of the Fund's total assets must be represented by cash items, U.S. government securities, securities of other regulated investment companies and other securities, with such other securities limited for the purpose of this calculation in respect to any one issuer to an amount not greater than 5 percent of the value of the Fund's assets and not greater than 10 percent of the outstanding voting securities of such issuer, and (2) not more than 25 percent of the value of its total assets may be invested in securities of any one issuer, or two or more issuers that are controlled by the Fund (within the meaning of Section 851(b)(4)(B) of the Code) and that are engaged in the same or similar trades or business (other than U.S. government securities of other regulated investment companies.)

change in price. These intra-day values of the Underlying Index will be disseminated every 15 seconds throughout the trading day. In addition, there will be disseminated a value for the Underlying Index once each trading day, based on closing prices in the relevant exchange market.

The Fund will make available on a daily basis the names and required number of shares of each of the Deposit Securities in a Creation Unit aggregation, as well as information regarding the cash-balancing amount. The NAV for the Fund will be calculated and disseminated daily. In addition, the Adviser maintains a website that provides information about the returns and methodology of various indices, and will include the Underlying Index for the Fund. The Trust also intends to maintain a website that will include the Fund prospectus and additional quantitative information that is updated on a daily basis, including daily trading volume and closing price for the Fund. There will also be disseminated a variety of data with respect to the Index on a daily basis by means of CTA including shares outstanding and cash amount per Creation Unit aggregation, which will be made available prior to the opening of the trading on the Exchange. The closing prices of the Fund's Deposit Securities are readily available from, as applicable, the relevant exchanges, automated quotation systems, or on-line information services such as Bloomberg or Reuters.

Dissemination of indicative portfolio value. To provide updated information relating to the Fund for use by investors, professionals and persons wishing to create or redeem Fund Shares, and because the Fund is based on the Index which includes non-U.S. components, it is expected that there will be disseminated through the facilities of the CTA an updated indicative portfolio value (''Value'') for the Fund traded on the Exchange as calculated by a securities information provider (''Value Calculator''). The Value will be disseminated on a per Fund Shares basis every 15 seconds during regular NYSE trading hours for the Fund. The equity securities values included in the Value are the values of the Deposit Securities, which are the same as the portfolio that is to be utilized generally in connection with creations and redemptions of the Fund Shares Creation Unit aggregations on that day. The equity securities included in the Value reflect the same market capitalization weighting as the Deposit Securities in the portfolio for the Fund. In addition to the value of the Deposit Securities for the Fund, the Value includes the Cash Component. The Value also reflects changes in currency exchange rates between the U.S. dollar and the applicable home foreign currency.

The Value may not reflect the value of all securities included in the applicable Underlying Index. In addition, the Value does not necessarily reflect the precise composition of the current portfolio of securities held by the Fund at a particular point in time. Therefore, the Value on a per Fund Shares basis disseminated during the Exchange's trading hours should not be viewed as a real-time update of the NAV of the Fund, which is calculated only once a day. While the Value that will be disseminated at 9:30 a.m. is expected to be generally very close to the most recently calculated NAV on a per Fund Shares basis, it is possible that the value of the portfolio of securities held by the Fund may diverge from the Deposit Securities Values during any trading day. In such case, the Value will not precisely reflect the value of the Fund portfolio.

However, during the trading day, the Value can be expected to closely approximate the value per Fund share of the portfolio of securities for the Fund except under unusual circumstances (*e.g.,* in the case of extensive rebalancing of multiple securities in the Fund at the same time by the Advisor). The circumstances that might cause the Value to be based on calculations different from the valuation per Fund share of the actual portfolio of the Fund would not be different than circumstances causing any index fund or trust to diverge from an underlying benchmark index.

The Exchange believes that dissemination of the Value based on the Deposit Securities provides additional information regarding the Fund that would not otherwise be available to the public and is useful to professionals and investors in connection with Fund Shares trading on the Exchange or the creation or redemption of Fund Shares.

For the Fund, the Value Calculator will utilize closing prices (in applicable foreign currency prices) in the principal foreign market(s) for securities in the Fund portfolio, and convert the price to U.S. dollars. This Value will be updated every 15 seconds during the Exchange's trading hours to reflect change in currency exchange rates between the U.S. dollar and the applicable foreign currency. The Value will also include the applicable Cash Component for the Fund.

For foreign stocks, the principal foreign markets that have trading hours overlapping regular trading hours on the Exchange, the Value Calculator will update the applicable Value every 15 seconds to reflect price changes in the applicable foreign market or markets, and convert such prices into U.S. dollars based on the current currency exchange rate. When the foreign market or markets are closed but the Exchange is open, the Value will be updated every 15 seconds to reflect changes in currency exchange rates after the foreign markets close.

Other characteristics of the fund. The Exchange represents that a minimum of two Creation Unit aggregations for the Fund, based on the S&P Global 100 Index, will be outstanding at the commencement of trading on the Exchange. The number of shares per Creation Unit aggregation will be 50,000 shares.[8]

Fund Shares will be registered in book-entry form through the DTC. Trading in Fund Shares on the Exchange will be effected until 4:00 p.m. each business day.[9] The minimum trading increment for Fund Shares on the Exchange initially will be 1/64th of $1.00.[10]

Dividends from net investment income will be declared and paid at least annually by the Fund. Distributions of realized securities gains, if any, generally will be declared and paid at least once a year, but the Fund may make distributions on a more frequent basis to comply with distribution requirements of the Code. The Fund may make the DTC book-entry Dividend Reinvestment Service available for use by beneficial owners of the Fund through DTC Participants for reinvestment of their cash proceeds.

Original and annual listing fees. The Exchange original listing fee applicable to the listing of the Fund will be $5,000.

[8] By virtue of the Exchange's File No. SR–NYSE–00–46, submitted to the Commission for notice and approval, the number of Units required to be outstanding at the commencement of trading under Section 703.16(A)(4) will be established by the Exchange for each series. At the commencement of trading of Fund Shares based on the S&P Global 100 Index on the Exchange, there will be required to be at least 100,000 Fund Shares outstanding. The Commission believes that in light of the Exchange's proposed rule change in SR–NYSE–00–46, and the commission's approval of a minimum number of 100,000 Fund Shares outstanding on other exchanges, it is reasonable for the Exchange to require a minimum of 100,000 Fund Shares outstanding on the S&P Global 100 Index.

[9] The Exchange expects to extend its regular hours for the trading of the Fund to 4:15 p.m. at such time that a futures contract on the Index becomes available for trading on a futures exchange in the U.S.

[10] When decimal pricing is extended to all securities traded on the Exchange, the minimum trading increment for Fund Shares based on the S&P Global 100 on the Exchange will be expressed in decimals.

The annual continued listing fee for the Fund will be $2,000.

Stop and stop limit orders. Since Investment Company Units issued pursuant to Section 703.16, Investment Company Units, of the LCM are derivatively priced based upon another security or index of securities, the Exchange is proposing to amend NYSE Rule 13 to provide that stop and stop limit orders to buy or sell Investment Company Units shall, with the prior approval of a Floor Governor or two Floor Officials, be elected by a quotation. Fund Shares will be eligible for this treatment. The proposed rule change would require a Floor Governor or two Floor Officials to give approval for this treatment. The Exchange believes this is an appropriate precaution given the newness of the rule to the Exchange. After a month or two of experience with the new rule, the Exchange anticipates that it will file an additional rule change to allow approval by only one Floor Official to suffice.

Trading halts. The Exchange may consider all relevant factors in exercising its discretion to halt or suspend trading in the Fund. Trading on the Exchange in the Fund Shares may be halted because of market conditions or for reasons that, in the view of the Exchange, make trading in the Fund Shares inadvisable. These may include (1) the extent to which trading is not occurring in stocks in the Index or (2) other unusual conditions or circumstances detrimental to maintenance of a fair and orderly market. In addition, trading in Fund Shares is subject to trading halts caused by extraordinary market volatility pursuant to Exchange's ''circuit breaker'' rules (NYSE Rule 80A).

Surveillance procedures. The Exchange's written Surveillance procedures for Fund Shares will be similar to the procedures utilized for other Investment Company Units.

Prospectus delivery and information circular. Prior to commencement of trading in the Fund on the Exchange, the Exchange will issue an information circular informing members and member firms that investors purchasing Fund Shares shall be required to receive a prospectus prior to or concurrently with the confirmation of a transaction in Fund Shares. The information circular will also inform members and member firms of the characteristics of the Fund and of applicable Exchange Rules, including suitability rules.[11]

2. Statutory Basis

The Exchange believes that the proposed rule change is consistent with Section 6 of the Act[12] in general and furthers the objectives of Section 6(b)(5) of the Act[13] in particular in that it is designed to prevent fraudulent and manipulative acts and practices, to promote just and equitable principles of trade, to foster cooperation and coordination with persons engaged in facilitating transactions in securities, to remove impediments to and perfect the mechanism of a free and open market and a national market system and, in general, to protect investors and the public interest.

B. Self-Regulatory Organization's Statement on Burden on Competition

The Exchange does not believe that the proposed rule change will impose any burden on competition.

C. Self-Regulatory Organization's Statement on Comments on the Proposed Rule Change Received From Members, Participants or Others

The Exchange has neither solicited nor received any written comments on the proposed rule change.

III. Solicitation of Comments

Interested persons are invited to submit written data, views and arguments concerning the foregoing, including whether the proposed rule change is consistent with the Act. Persons making written submissions should file six copies thereof with the Secretary, Securities and Exchange Commission, 450 Fifth Street NW, Washington, DC 20549–0609. Copies of the submission, all subsequent amendments, all written statements with respect to the proposed rule change that are filed with the Commission, and all written communications relating to the proposed rule change between the Commission and any person, other than those that may be withheld from the public in accordance with the provisions of 5 U.S.C. 552, will be available for inspection and copying in the Commission's Public Reference Room. Copies of such filing will also be available for inspection and copying at the principal office of the above-mentioned self-regulatory organization. All submissions should refer to File No. SR–NYSE–00–53 and should be submitted by January 2, 2001.

IV. Commission's Findings and Order Granting Accelerated Approval of Proposed Rule Change

After careful consideration, the Commission finds that the proposed rule change is consistent with the requirements of the Act and the rules and regulations thereunder applicable to a national securities exchange, and, in particular, with the requirements and of Section 6(b)(5) of the Act.[14] The Commission believes that the Exchange's proposal to list and trade shares of the Fund based on S&P Global Index will provide investors with a convenient and efficient way of participating in the securities markets, including involvement with equities issued by foreign investors. The Exchange's proposal should also provide investors with increased flexibility in satisfying their investment needs by allowing them to purchase and sell a single security, at negotiated prices throughout the business day that replicates the performance of a portfolio of stocks. Accordingly, as discussed below, the Commission finds that the Exchange's proposal will promote just and equitable principles of trade, foster cooperation and coordination with persons engaged in regulating, clearing, settling, processing information with respect to, and facilitating transactions in securities, and, in general, protect investors and the public interest consistent with Section 6(b)(5) of the Act.[15]

Section 703.16 of the LCM provides for the listing and trading of Investment Company Units, which are shares that represent an interest in a registered investment company that could be organized as a unit investment trust, an open-end management investment company, or similar entity. The Commission believes that the listing and trading Fund Shares based on the S&P Global 100 Index will provide investors with an alternative to trading a broad range of securities on an individual basis, and will give investors the ability to trade a product representing an interest in a portfolio of securities designed to reflect substantially the applicable underlying index. The Fund should allow investors to: (1) Respond quickly to market changes through intra-day trading opportunities; (2) engage in hedging strategies similar to those used by institutional investors; and (3) reduce transaction costs for trading a portfolio of securities.

[11] As per telephone conversation between James F. Duffy, Senior Vice President and Associate General Counsel, Office of the General Counsel, NYSE, and Heather Traeger, Attorney, Division of Market Regulation, Commission, November 30, 2000.

[12] 15 U.S.C. 78f(b).

[13] 15 U.S.C. 78f(b)(5).

[14] 15 U.S.C. 78f(b)(5). In approving this rule, the Commission notes that it has considered the proposed rule's impact on efficiency, competition, and capital formation. 15 U.S.C. 78c(f).

[15] 15 U.S.C. 78f(b)(5).

Although the Fund is not a leveraged instrument, and, therefore, does not possess any of the attributes of stock index options, its prices will be derived and based upon the securities and the cash held in the Fund. Accordingly, the level of risk involved in the purchase or sale of this Fund is similar to the risk involved in the purchase or sale of traditional common stock, with the exception that the pricing mechanism for the Fund is based on a portfolio of securities. Based on these factors, the Commission believes that it is appropriate to regulate the Fund in a manner similar to other equity securities. Nevertheless, the Commission believes that the nature of the Fund raises certain product design, disclosure, trading, market impact and other issues that must be addressed adequately. As discussed in more detail below, the Commission believes the Exchange has adequately addressed these concerns.

A. The Fund Generally

The Commission believes that the proposed Fund is reasonably designed to provide investors with an investment vehicle that substantially reflects in value the index it is based upon. In this regard, the Commission notes that the Fund will use an ''indexing'' investment approach that attempts to replicate, before expenses, the performance of the Index. The Commission notes that the Fund uses representative sampling to track the Underlying Index. The Commission also notes that the Fund will normally invest at least 90% of its total assets in stocks that comprise the Underlying Index. The Commission believes that the component selection and replacement procedures for the Fund should help to ensure that the component securities generally remain highly capitalized and actively traded.

B. Disclosure

The Commission believes that the Exchange's proposal should help to ensure that investors are adequately apprised of the terms, characteristics, and risks of trading the Fund. As noted above, all investors will receive a prospectus regarding the product, prior to or concurrently with the confirmation of a transaction therein. In addition, the Trust intends to maintain a website that will include the Fund prospectus and additional quantitative information that is updated on a daily basis.

The Commission notes that the Fund would be subject to the Exchange's rules and procedures for Investment Company Units. Because the Fund will be in continuous distribution, the delivery requirements of the Securities Act of 1933 will apply both to initial investors and to all investors purchasing such securities in secondary market transactions on the Exchange. The Commission also notes that the Exchange will issue an information circular to its members explaining the unique characteristics of this type of security prior to the commencement of trading in shares of the Fund. The circular also will address members' responsibility to deliver a prospectus or product description to all investors.

C. Listing and Trading of the Index Fund Shares

The Commission finds that adequate rules and procedures exist to govern the listing and trading of the Fund. The Fund will be subject to the full panoply of the Exchange's listing, delisting or suspension rules and procedures governing the trading of Investment Company Units. The Fund will be deemed an equity security subject to all rules governing the trading of equity securities, including, among others, rules governing trading halts, notices to members, responsiblities of the specialist, customer suitability requirements, and the election of a stop and stop limit order. The Exchange's surveillance procedures for Investment Company Units will be applicable to the Fund. The Commission believes that the Exchange's surveillance procedures are adequate to address the concerns associated with the listing and trading of this Fund, including any concerns associated with purchasing and redeeming Creation Units. The Commission further finds that permitting stop and stop limit orders to be elected by a quotation for Investment Company Units is consistent with the Act and should facilitate the trading of such securities.

In addition, the Exchange has designated that a minimum of two Creation Units, at approximately 50,000 shares each, will be required to be outstanding at the start of trading. The Commission believes this minimum number will be sufficient to help to ensure that a minimum level of liquidity will exist at the start of trading. Furthermore, the Commission finds that registering the Fund shares in book-entry form through DTC, managing the distribution of dividends from net investment income, if any, and permitting beneficial owners of the Fund to offer the DTC book-entry Dividend Reinvestment Service are characteristics of the Fund that are consistent with the Act and should allow for the maintenance of fair and orderly markets and perfect the mechanism of a free and open market.

Furthermore, the Commission believes that the Exchange's proposal to trade the Fund in minimum fractional increments of 1/64 of $1.00 is consistent with the Act. The Commission believes that such trading should enhance market liquidity, and should promote more accurate pricing, tighter quotations, and reduced price fluctuations. The Commission also believes that such trading should allow customers to receive the best possible execution of their transactions in the Fund. Additionally, the Commission believes that the proposed original listing fee of $5,000 is reasonable as is the proposed annual fee of $2,000.

D. Dissemination of Information Regarding the Fund

The Commission believes that the Values and figures that the Exchange proposes to have disseminated for the Fund will provide investors with timely and useful information concerning the value of the Fund. The Exchange represents that the value information will be disseminated, every 15 seconds during regular trading hours, through the facilities of the CTA and will reflect currently available information concerning the value for Shares of the Fund. On a daily basis, the Exchange represents that it will disseminate the Shares outstanding, the cash amount per Creation Unit Aggregation, and the net asset value. The Exchange represents that the closing prices of the Fund's Deposit Securities are readily available from, as applicable, the relevant exchanges, automated quotation systems, or on-line information services such as Bloomberg or Reuters. The intra-day value of the Underlying Index will be available from S&P.

E. Accelerated Approval

The Commission finds good cause for approving the proposed rule change prior to the thirtieth day after the date of publication of notice thereof in the **Federal Register** pursuant to Section 19(b)(2) of the Act. The Commission notes that the proposed rule change is based on the listing and trading standards in Section 703.16, Investment Company Unites, of the LCM, which the Commission previously approved after soliciting public comment on the proposal pursuant to Section 19(b)(1) of the Act.[16] The Commission does not believe that the proposed rule change raises novel regulatory issues that were not addressed in the filing. Accordingly, the Commission believes it is appropriate to permit investors to benefit from the flexibility afforded by

[16] 15 U.S.C. 78s(b)(1).

this new product by trading them as soon as possible. Accordingly, the Commission finds that there is good cause, consistent with Section 6(b)(5) of the Act,[17] to approve the proposal on an accelerated basis.

V. Conclusion

It is Therefore Ordered, pursuant to Section 19(b)(2) of the Act, that the proposed rule change (SR–NYSE–00–53), is hereby approved on an accelerated basis.

For the Commission, by the Division of Market Regulation, pursuant to delegated authority.[18]

Margaret H. McFarland,

Deputy Secretary.

[FR Doc. 00–31386 Filed 12–8–00; 8:45 am]

BILLING CODE 8010–01–M

SECURITIES AND EXCHANGE COMMISSION

[Release No. 34–43668; File No. SR–OCC–99–15]

Self-Regulatory Organizations; The Options Clearing Corporation; Order Granting Approval of Proposed Rule Change Relating to Clearing Member Affiliates

December 4, 2000.

On November 2, 1999, The Options Clearing Corporation (''OCC'') filed with the Securities and Exchange Commission (''Commission'') a proposed rule change (File No. SR–OCC–99–15) and on August 11, 2000, amended the proposed rule change pursuant to section 19(b)(1) of the Securities Exchange Act of 1934 (''Act'')[1] Notice of the proposal was published in the **Federal Register** on September 15, 2000.[2] No comment letters were received. For the reasons discussed below, the Commission is granting approval of the proposed rule change.

I. Description

The principal purpose of the proposed rule change is allow certain affiliates of a clearing member to be designated as non-customers under the Commission's hypothecation rules[3] so that the affiliates may have their transactions and positions commingled in their clearing member's firm account and/or proprietary X–M account at OCC for the purpose of receiving more favorable clearing margin treatment.[4] The proposed rule change creates a definition of Member Affiliates that consists of the relevant portion of the existing definition of Related Person in OCC's By-Laws. (For the sake of economy of expression and consistency, OCC proposes a replace that portion of the Related Person definition used to define Member Affiliate with the term Member Affiliate.) The proposed rule change then modifies the definition of Non-Customer to include a Member Affiliate that has executed a non-conforming subordination agreement[5] that has been approved by the clearing member's designated examining authority.

Additionally, the proposed rule change modifies the definition of Related Person to eliminate redundancies and to more closely parallel 17 CFR 1.3(y), which defines ''proprietary account'' for the purposes of the Commodity Exchange Act's regulations.[6] The proposed rule no longer refers to spouses of ''any such person'' (*i.e.,* any officer, director, or general or special partner) which was redundant because the rule already covers spouses of ''any non-customer of the clearing member,'' and the definition of Non-Customer includes officers, directors, or general or special partners. Additionally, in order to conform OCC rules with Section 1.3(y)'s definition of ''proprietary account,'' the proposed rule change clarifies that not only are spouses and minor dependents of non-customers Related Persons but also that the spouses and minor dependents of certain employees are also Related Persons.

II. Discussion

Section 17A(b)(3)(F)[7] of the Act requires that the rules of a clearing agency be designed to assure the safeguarding of securities and funds which are in the custody or control of the clearing agency or for which it is responsible. For the reasons set forth below, the Commission believes that OCC's proposed rule change is consistent with OCC's obligations under the Act.

The proposed rule change to add and modify several definitions so that affiliates may have their transactions and positions commingled in their clearing member's firm account and/or proprietary X–M account at OCC should result in a more accurate assessment of risk and a more appropriate margin requirement thus further assuring the safeguarding the securities and funds within OCC's control. In addition the proposed rule change should provide more consistency with respect to the interplay of the Commodity Exchange Act's regulations with OCC's rules.

III. Conclusion

On the basis of the foregoing, the Commission finds that the proposed rule change is consistent with the requirements of the Act and in particular Section 17A of the Act and the rules and regulations thereunder.

It is therefore ordered, pursuant to section 19(b)(2) of the Act, that the proposed rule change (File No. SR–OCC–99–15) be and hereby is approved.

For the Commission by the Division of Market Regulations, pursuant to delegated authority.[8]

Margaret H. McFarland,

Deputy Secretary.

[FR Doc. 00–31380 Filed 12–8–00; 8:45 am]

BILLING CODE 8010–01–M

SECURITIES AND EXCHANGE COMMISSION

[Release No. 34–43645; File No. SR–Phlx–00–92]

Self-Regulatory Organizations; Notice of Filing of Proposed Rule Change by the Philadelphia Stock Exchange, Inc. Concerning Reporting, Examination, Recordkeeping, and Disclosure Requirements Related to Off-Floor Trading Organizations and Their Affiliated Traders

November 30, 2000.

Pursuant to Section 19(b)(1) of the Securities Exchange Act of 1934 (''Act'')[1] and Rule 19b–4[2] thereunder, notice is hereby given that on October 11, 2000, the Philadelphia Stock Exchange, Inc. (''Phlx'' or ''Exchange'') filed with the Securities and Exchange Commission (''Commission'') the proposed rule change as described in

---

[17] 15 U.S.C. 78s(b)(5).

[18] 17 CFR 200.30–3(a)(12).

[1] 15 U.S.C. 78s(b)(1).

[2] Securities Exchange Act Release No. 43276, (September 11, 2000), 65 FR 56015.

[3] 17 CFR 240.8c–1 and 240.15c2/1.

[4] *See also* no-action letter from Michael A. Macchiaroli, Associate Director, Division of Market Regulation, Commission, to William H. Navin, Executive Vice President and General Counsel, OCC, (June 15, 2000).

[5] Non-conforming subordination agreements are subordination agreements that do not meet the requirements of Appendix D of Rule 15c3–1.

[6] As defined, a Related Person is essentially a person whose account would be a ''proprietary account'' under the rules of the Commodity Futures Trading Commission, but who is nevertheless a ''customer'' for purposes of the Commission's hypothecation rules cited above. Market Makers who are Related Persons of a clearing member are deemed to be Associated Market Makers and are excluded from the Combined Market Maker Account under Article VI, Section 3(c) of OCC's By-Laws.

[7] 15 U.S.C. 78q–1(b)(3)(F).

[8] 17 CFR 200.30–3(a)(12).

[1] 15 U.S.C. 78s(b)(1).

[2] 17 CFR 240.19b–4.

Items I, II, and III below, which Items have been prepared by the Exchange. The Commission is publishing this notice to solicit comments on the proposed rule change from interested persons.

I. Self-Regulatory Organization's Statement of the Terms of Substance of the Proposed Rule Change

The Phlx proposes to adopt new Exchange Rules 641, 642, 643, and 644 concerning reporting, examination, recordkeeping, and disclosure requirements related to off-floor trading organizations and their affiliated traders.

Specifically, the rules would require off-floor member organizations for whom the Exchange is the Designated Examining Authority (''DEA'') to make affirmative inquiry of their affiliated traders regarding the sources of their funding and to disclose to the Exchange annually all borrowing, lending, investment, or other financing activity relating to the organization.

For those off-floor traders that are affiliated with off-floor member organizations and that are organized as entities other than individuals (*e.g.*, corporations or limited liability companies (''LLCs'')), the proposed rules also would require that each individual trader that trades in the account of such an entity: (i) Be a direct shareholder or member of the organization; or (ii)(A) hold his or her ownership interest through an intermediate entity (such as a corporation or an LLC), (B) be the sole shareholder or member of such intermediate entity, and (C) be the sole person authorized to trade for the account identified with such individual or intermediate entity. In any case, the individual trader would be subject to the examination and registration requirements applicable to individual traders.

In addition, the proposed rules would require off-floor member firms to represent that their affiliated traders and trading entities are in compliance with certain federal and state laws. Finally, the proposed rules would allow the Exchange to conduct examinations of affiliated traders of off-floor trading firms, whether natural persons or other entities.

The text of the proposed rule change is set forth below. New language is in italics.

Rule 641. Reporting, Record Keeping and Regulatory Requirements for Off Floor Traders and Off-Floor Trading Organizations

All member organizations and participant organizations engaged in proprietary or agency trading of securities from off the floor of the Exchange for whom the Exchange is the Designated Examining Authority (''off-floor firms'') shall:

(a) not less frequently than annually, make an affirmative inquiry of each individual off-floor trader or trading entity affiliated with such off-floor firm (each an ''affilliated trader''), concerning (i) any and all loan or lending arrangements entered into by the individual affiliated trader or trading entity as borrower, including an inquiry of the names, addresses, and affiliations of any person or entity involved, and dollar amounts borrowed or loaned; (ii) any and all investment arrangements entered into by the individual affiliated trader whereby any person or entity has an investment or equity interest in the affiliated trader or any account over which such affiliated trader has trading authority, including an inquiry of the names, addresses, and affiliations of any person or entity involved, and the dollar amounts invested; (iii) any and all third parties, including natural persons or other entities, which share in the profits or losses of any account of an affiliated trader of such off-floor firm;

(b) make reasonable investigation as to whether any relationship disclosed as a result of the inquiry referred to in rule 641(a) (or otherwise coming to the attention of the off-floor firm) is in compliance with all the regulations set forth in Rule 641(c) below;

(c) annually certify to the Exchange, in writing, that based upon such inquiry (i) such off-floor firm has made all inquiries required pursuant to Rule 641(a); (ii) such off-floor firm and its affiliated traders are in compliance with all applicable laws, including, but not limited to, the Securities Exchange Act of 1934, the Investment Company Act of 1940, the Investment Advisers Act of 1940, and any applicable state laws; and (iii) that such off-floor firm or affiliated trader (A) carries no customer accounts and (B) does not trade in an account on behalf of investors or lenders who share in the profits of such account (''de facto customer account''); and

(d) maintain all records pertaining to affiliated traders and accounts of affiliated traders for a minimum of three years in a readily accessible location.

Rule 642. Examination of Off-Floor Traders

The Exchange shall have the right to conduct examinations of all off-floor trading firms, and of all affiliated traders of such off-floor trading firms, whether natural persons or other entities, including, but not limited to, affiliated traders, and any person or other entity engaged in lending, borrowing, investing, or other financing related to the off-floor trading firm and/or its affiliated traders. The terms used in this Rule shall have the same meaning as in Rule 641.

Rule 643. Ownership of Accounts. Affiliated Members of Off-Floor Trading Organizations

(a) Any affiliated trader of an off-floor trading firm engaged in off-floor trading shall be either (i) a natural person; or (ii) if not a natural person, an entity, which shall be organized and have its registered office in a state or possession of the United States or the District of Columbia, and which is 100% owned and controlled by one natural person engaged in off-floor trading for the account of such entity. With respect to Section (ii) hereof, the natural person shall be registered with the Exchange in accordance with Exchange Rule 604, and shall be required to be qualified as set forth in Exchange Rule 604(e).

(b) With respect to affiliated traders which are not natural persons, the off-floor firm shall make an annual, affirmative inquiry into the ownership status of such an entity to ensure compliance with Section (a)(ii) of this Rule, and shall report the results of such annual inquiry in writing to the Exchange. The Exchange may, in its discretion, require evidence and identification of the ultimate beneficial interest in such an entity. An entity referred to in Section (a)(ii) hereof, and any natural person engaged in off-floor trading in the account of such an entity, shall be subject to the examination and registration requirements set forth in Exchange Rule 604(e).

(c) Any off-floor firm or affiliated trader may apply for an exemption from the provisions set forth in this Rule. The Exchange shall have the right to demand the Opinion of Counsel of the off-floor firm or affiliated trader regarding the applicant's compliance with applicable laws, including, but not limited to, the Securities Exchange Act of 1934, The Investment Company Act of 1940, the Investment Advisers Act of 1940, and any applicable state laws.

Rule 644. Disclosure by Off-Floor Trading Organizations

All off-floor trading firms shall annually disclose to the Exchange, in writing:

(a) All borrowing, lending, investment, or other financing activity relating to the off-floor trading organization; and

(b) the names, addresses, and telephone numbers of all persons or other entities which engage in borrowing, lending, investment, or other financing activity relating to the off-floor firm.

(c) The Exchange may, in its discretion, demand written certification from off-floor trading organizations of their compliance with applicable laws, including, but not limited to, the Securities Exchange Act of 1934, The Investment Company Act of 1940, the Investment Advisers Act of 1940, and any applicable state laws.

II. Self-Regulatory Organization's Statement of the Purpose of, and Statutory Basis for, the Proposed Rule Change

In its filing with the Commission, the Phlx included statements concerning the purpose of and basis for the proposed rule change and discussed any comments it received on the proposed rule change. The text of these statements may be examined at the places specified in Item IV below. The Phlx has prepared summaries, set forth in Sections A, B, and C below, of the most significant aspects of such statements.

A. Self-Regulatory Organization's Statement of the Purpose of, and Statutory Basis for, the Proposed Rule Change

1. Purpose

Phlx member firms for which the Exchange is the DEA generally do not carry public customer accounts. If a Phlx member firm carries customer accounts, it is required to become a member of a national securities association (*e.g.*, the National Association of Securities Dealers (''NASD'')). Under agreements that the Phlx has entered into with other self-regulatory organizations (''SROs'') in accordance with Rule 17d–2 under the Act,[3] any Phlx member that is also a member of another SRO (including the NASD) would be assigned to another DEA.

Typically, off-floor trading firms that are Phlx members are structured as LLCs. In most cases, the individual traders at the firm are also ''members'' of the firm and hold equity interests in the firm. These traders are not regarded as ''customers'' of the firm. The typical Phlx member that is an LLC has a clearing arrangement with another member firm whereby the latter clears all transactions for the LLC through a single account. Individual off-floor traders and trading entities trade as affiliated members of the LLC by way of ''sub-accounts'' with the LLC.

One mail purpose of the proposed new rules is to ensure that off-floor traders and trading entities affiliated with off-floor member firms for which the Exchange is the DEA are not trading on behalf of customers. The proposed rules would enable the Exchange to determine whether such affiliates have certain third-party financing arrangements in place which would cause them to be engaged in trading on behalf of customers or *de facto* customers because, for example, the ''lender'' or ''investor'' shares in the trading profits and losses of traders affiliated with the firms.[4]

The Phlx's proposal would require that, for off-floor firms for which the Phlx is the DEA, traders who are also members of the firm (in the case of firms organized as LLCs) either hold their membership interests directly or indirectly through a legal entity that is wholly owned by them, unless the firm has obtained a waiver from the Phlx. To allow a member to hold his membership interest in the LLC indirectly through a legal entity that, itself, has multiple shareholders could result in one individual trading on behalf of an unlimited number of co-owners. While the proposed rule does not preclude multiple owners,[5] the main reason why such off-floor firms are Phlx DEA members is because such firms do not carry public customer accounts. Under certain circumstances, the multiple owners of such affiliated trading firms could be deemed ''customers'' of the individual who is conducting trading activities on their behalf. In that event, regulatory requirements applicable to firms with ''customers'' would attach to such a member firm.

In addition, certain other unanticipated legal and regulatory problems could arise, such a triggering registration and other requirements under the Investment Company Act of 1940, the Investment Advisers Act of 1940, or state securities laws.

The proposed rules would allow the Exchange's Examinations Department to monitor more closely the activities of off-floor traders and off-floor trading firms for whom the Exchange is the DEA, and would require such off-floor trading firms to inquire into, and more closely monitor, the activities and financing arrangements of their affiliated individual traders and trading entities.

Another purpose of the proposed rules is to require off-floor member firms to represent to the Exchange that they will make inquiries concerning investment and other arrangements which, it undertaken by the off-floor member firms or by their affiliated traders, could legally cause such off-floor member firms or their affiliated traders to become an unregistered investment company, investment advisory firm, or broker-dealer. For example, the relationship between an individual off-floor trader and an investor who shares in the profits and losses associated with that off-floor trader's account could be construed as an advisory relationship, whereby the off-floor trader makes investment decisions on behalf of, or dispenses investment advice to, the investor. Although the Exchange does not directly enforce securities laws other than those pertaining to the Act,[6] a failure to comply with these other laws could be a threat to customers, investor protection, and the soundness of the off-floor firm, and result in violations of Exchange rules such as, without limitation, rules pertaining to books and records, net capital requirements, supervisory procedures, and margin requirements.

The proposed rules would require off-floor firms for which the Exchange is the DEA to provide annual reports to the Exchange concerning such firm's inquiries into its affiliated traders and trading entities, and to annually disclose in writing to the Exchange its borrowing, lending, investment, or other financing activities (including names, addresses, and telephone numbers of all persons or other entities who engage in such activities).[7]

[3] 17 CFR 240.17d–2.

[4] If an off-floor trading firm were engaged in trading on behalf of customers, it would be required to comply with a variety of regulatory and procedural requirements, such as Rules 15c3–1 and 15c3–3 under the Act, 17 CFR 240.15c–3 and 240.15c3–3.

[5] Any off-floor firm or affiliated trader may apply for an exemption from the single-shareholder requirement pursuant to proposed Rule 643(c).

[6] *See* Phlx Rule 960.

[7] Phlx Rule 783 requires members and member organizations to report to the Exchange any financial arrangement entered into with another member, member organization, foreign currency participant, or participant organization, or a general partner, voting shareholder, or any associated person thereof, or a non-member. A ''financial arrangement'' is defined in Rule 783 as: (1) The direct financing of a member or participant organization's dealings upon the Exchange with the

Continued

2. Statutory Basis

The Phlx believes the proposed rule change is consistent with Section 6 of the Act [8] in general and Section 6(b)(5) [9] in particular in that it is designed to perfect the mechanisms of a free and open market and a national market system, and to protect investors and the public interest, by requiring diligence on the part of off-floor member firms for which the Exchange is the DEA in examining the financing and investment arrangements of their affiliated traders and trading entities, and by requiring off-floor member firms to report the results of such examinations to the Exchange. The Exchange believes that the proposal will help ensure that the rules and provisions of the Act that are designed to promote customer protection and the financial soundness of broker-dealers are followed, and should facilitate the Exchange's examination and enforcement functions.

B. Self-Regulatory Organization's Statement on Burden on Competition

The Phlx does not believe that the proposed rule change would impose any inappropriate burden on competition.

C. Self-Regulatory Organization's Statement on Comments on the Proposed Rule Change Received From Members, Participants, or Others

No written comments were solicited or received.

III. Date of Effectiveness of the Proposed Rule Change and Timing for Commission Action

Within 35 days of the date of publication of this notice in the **Federal Register** or with such longer period (i) as the Commission may designate up to 90 days of such date if it finds such longer period to be appropriate and publishes its reasons for so finding, or (ii) as to which the Exchange consents, the Commission will:

(A) By order approve such proposed rule change; or

(B) Institute proceedings to determine whether the proposed rule change should be disapproved.

IV. Solicitation of Comments

Interested persons are invited to submit written data, views, and arguments concerning the foregoing, including whether the proposed rule change is consistent with the Act. Persons making written submissions should file six copies thereof with the Secretary, Securities and Exchange Commission, 450 Fifth Street NW., Washington DC 20549–0609. Copies of the submission, all subsequent amendments, all written statements with respect to the proposed rule change that are filed with the Commission, and all written communications relating to the proposed rule change between the Commission and any person, other than those that may be withheld from the public in accordance with the provisions of 5 U.S.C. 552, will be available for inspection and copying in the Commission's Public Reference Room. Copies of such filings will also be available for inspection and copying at the principal office of the Phlx. All submissions should refer to File No. SR–Phlx–00–92 and should be submitted by January 2, 2001.

For the Commission, by the Division of Market Regulation, pursuant to delegated authority.[10]

Margaret H. McFarland,

Deputy Secretary.

[FR Doc. 00–31382 Filed 12–8–00; 8:45 am]

BILLING CODE 8010–01–M

exception of clearing arrangements; (2) any direct equity investment or profit sharing arrangement; (3) any consideration over the amount of $5000 that constitutes a gift, loan, salary, or bonus; and (4) the guarantee of a trading account with the exception of clearing arrangements. The proposed rules would apply to financial arrangements of affiliated traders and trading entities of the off-floor trading firms, and to the requirement of off-floor trading firms to conduct examinations of such affiliated traders and trading entities, and to report thereon to the Exchange. To the extent that an off-floor member firm has made a report of a financial arrangement pursuant to Rule 783 which is identical to a report required under the proposed rules, no such identical report would be required by the off-floor member firm. This would eliminate the unnecessary duplication of reporting by the off-floor member firm. Notwithstanding this exception, off-floor member firms subject to these proposed rules would be responsible for any other disclosure, examination, or other reporting required by the proposed rules.

[8] 15 U.S.C. 78f.

[9] 15 U.S.C. 78f(b)(5).

[10] 17 CFR 200.30–3(a)(12).

DEPARTMENT OF STATE

[Public Notice No. 3493]

Shipping Coordinating Committee; Renewal of the Shipping Coordinating Committee

The Department of State is renewing the Shipping Coordinating Committee to solicit the view of interested members of the public and government agencies on maritime policy issues, for the guidance of U.S. delegations to international meetings on these matters. The Under Secretary for Management has determined that the committee is necessary and in the public interest.

Membership includes representatives from the maritime industry, labor unions, environmental groups and government bureaus and agencies. The Committee will follow the procedures prescribed by the Federal Advisory Committee Act (FACA). Meetings will be open to the public unless a determination is made in accordance with the FACA Section 10(d), 5 U.S.C.

Any questions concerning this committee should be referred to the Executive Secretary, Stephen M. Miller at (202) 647–6961.

Dated: December 6, 2000.

Mira Piplani,

International Transportation and Commercial Officer.

[FR Doc. 00–31583 Filed 12–7–00; 2:26 pm]

BILLING CODE 4710–07–P

DEPARTMENT OF STATE

[Public Notice No. 3470]

Shipping Coordinating Committee; Subcommittee on Stability of Load Lines and on Fishing Vessels Safety; Notice of Meeting Cancellation

On November 15, 2000, 65 FR 69118, the United States Coast Guard published Notice #3466 to announce a meeting of the Shipping Coordinating Committee to be held on Monday, December 11, 2000. The purpose of this meeting was to review the agenda items to be considered at the forty-fourth session of the Subcommittee on Stability and Load Lines and on Fishing Vessels Safety (SLF 44) of the International Maritime Organization (IMO).

This notice is to announce that the meeting is cancelled.

For further information, please contact Mr. Paul Cojeen, U.S. Coast Guard Headquarters, Commandant (G–MSE–2), room 1308, 2100 Second Street, SW., Washington, DC 20593–0001 or by calling (202) 267–2988.

Dated: December 6, 2000.

Mira Piplani,

International Transportation and Commercial Officer.

[FR Doc. 00–31584 Filed 12–7–00; 2:26 pm]

BILLING CODE 4710–07–P

DEPARTMENT OF STATE

[Public Notice No. 3469]

Shipping Coordinating Committee; Subcommittee on Standards of Training and Watchkeeping; Notice of Meeting Cancellation

On November 15, 2000, 65 FR 69118, the United States Department of State published notice #3467 to announce a meeting of the Shipping Coordinating

Committee to be held on Thursday, December 14, 2000. The purpose of this meeting was to review the agenda items to be considered at the thirty-second session of the Subcommittee on Standards of Training and Watchkeeping (STW 32) of the International Maritime Organization (IMO).

This notice is to announce that the meeting is cancelled.

For further information, please contact Chief, Office of Operating and Environmental Standards, U.S. Coast Guard Headquarters, Commandant (G–MSO), room 1210, 2100 Second Street, SW, Washington, DC, 20593–0001 or by calling LCDR Luke Harden at: (202) 267–1838.

December 6, 2000.

Mira Piplani,

International Transportation and Commercial Officer.

[FR Doc. 00–31585 Filed 12–7–00; 2:26 pm]

BILLING CODE 4710–07–P

DEPARTMENT OF TRANSPORTATION

Research and Special Programs Administration

[Docket No. RSPA–00–7740 (PDA–25(R))]

Application by the Kiesel Company for a Preemption Determination as to Missouri Prohibition Against Recontainerization of Hazardous Waste at a Transfer Facility

AGENCY: Research and Special Programs Administration (RSPA), DOT.

ACTION: Notice of Reopening Period for Public Comment

SUMMARY: RSPA is reopening the period for interested parties to submit comments on an application by The Kiesel Company (Kiesel) for an administrative determination whether Federal hazardous material transportation law preempts a Missouri regulation prohibiting the recontainerization of hazardous waste by a transporter at a transfer facility.

DATES: Additional comments received on or before January 25, 2001, and rebuttal comments received on or before March 12, 2001, will be considered before issuing an administrative ruling on Kiesel's application. Rebuttal comments may discuss only those issues raised previously or by comments received during the initial comment period and may not discuss new issues.

ADDRESSES: The application and all comments received may be reviewed in the Dockets Office, U.S. Department of Transportation, Room PL–401, 400 Seventh Street, SW., Washington, DC 20590–0001. The application and all comments are also available on-line through the home page of DOT's Docket Management System, at ''http://dms.dot.gov.''

Comments must refer to Docket No. RSPA–00–7740 and may be submitted to the docket either in writing or electronically. Send three copies of each written comment to the Dockets Office at the above address. If you wish to receive confirmation of receipt of your written comments, include a self-addressed, stamped postcard. To submit comments electronically, log onto the Docket Management System website at http://dms.dot.gov, and click on ''Help & Information'' to obtain instructions.

A copy of each comment must also be sent to (1) Kiesel's attorney, Mr. Richard Greenberg, Greensfelder, Hemker & Gale, P.C., 2000 Equitable Bldg., 10 South Broadway, St. Louis, MO 63102–1774, and (2) Mr. Stephen M. Mahood, Director, Missouri Department of Natural Resources, P.O. Box 176, Jefferson City, MO 65102. A certification that a copy has been sent to these persons must also be included with the comment. (The following format is suggested: ''I certify that copies of this comment have been sent to Messrs. Greenberg and Mahood at the addresses specified in the **Federal Register**.'')

A list and subject matter index of hazardous materials preemption cases, including each Inconsistency Ruling (IR) and Preemption Determination (PD) issued by DOT, are available through the home page of RSPA's Office of the Chief Counsel, at ''http://rspa-atty.dot.gov.'' A paper copy of this list and index will be provided at no cost upon request to Mr. Hilder (see ''For Further Information Contact'' below).

FOR FURTHER INFORMATION CONTACT: Frazer C. Hilder, Office of the Chief Counsel, Research and Special Programs Administration, U.S. Department of Transportation, 400 Seventh Street, SW., Washington, DC 20590–0001 (Tel. No. 202–366–4400).

SUPPLEMENTARY INFORMATION:

I. Background

In a June 28, 2000 letter, Kiesel applied for a determination that Federal hazardous material transportation law, 49 U.S.C. 5101 *et seq.*, preempts the prohibition against recontainerization of hazardous waste in a regulation of the Missouri Department of Natural Resources (DNR) at 10 CSR 25–6.263(2)(A).10.H:

> Recontainerization of hazardous wastes at a transfer facility is prohibited; however, hazardous waste containers may be overpacked to contain leaking or to safeguard against potential leaking. When containers are overpacked, the transporter shall affix labels to the overpack container, which are identical to the labels on the original shipping container; * * *

In its application, Kiesel stated that it is a licensed hazardous waste transporter that has a rail siding at its facility located within the City of St. Louis, Missouri. Kiesel stated that it

> has been in discussions regarding the use of the rail siding at its facility to provide a transfer point for the off loading of hazardous waste from rail cars to tankers or vacuum trucks for transport to a disposal site in Illinois licensed to receive and dispose of hazardous waste. The transfer of hazardous waste from the rail car to a trailer or a vacuum truck would constitute recontainerization which is prohibited under Missouri regulations.

Notice of Kiesel's application was published in the **Federal Register** on August 14, 2000, and interested parties were invited to submit comments by September 28, 2000, and rebuttal comments by November 13, 2000. 65 FR 49633. In the August 14, 2000 public notice, RSPA also referred to DNR's regulations on transporters of hazardous waste set forth in 10 CSR 25–6.263; the lack of any general prohibition in the Hazardous Materials Regulations (HMR), 49 CFR Parts 171–180, against the transfer of hazardous materials from one container to another; and Kiesel's argument that ''an identical regulation'' was found to be preempted in PD–12(R), New York Department of Environmental Conservation Requirements on the Transfer and Storage of Hazardous Waste Incidental to Transportation, 63 FR 62517 (Dec. 6, 1995), decision on petition for reconsideration, 65 FR 15970 (Apr. 3, 1997), petition for judicial review dismissed, *New York* v. *U.S. Dep't of Transportation,* 37 F. Supp. 2d 152 (N.D.N.Y. 1999). 65 FR at 49633. In parts II and III of the August 14, 2000 public notice, RSPA discussed the preemption provisions in 49 U.S.C. 5125 and the procedures for issuing preemption determinations. *Id.* at 49634–35.

II. Comments Received and Request to Withdraw Application

In response to the August 14, 2000 public notice, RSPA has received the following submissions:

—An August 30, 2000 letter from Kiesel clarifying that it had not been advised by DNR that transferring hazardous waste from a rail car to a motor vehicle would constitute a prohibited recontainerization of hazardous waste, contrary to RSPA's understanding from Kiesel's mention

of ''discussions'' in its application. *See* 65 FR at 49634. In this letter, Kiesel also stated that ''the plain language of the regulation would encompass this practice as it would require that rail cars of bulk hazardous waste would be placed in new and different containers such as vacuum trucks or tank trailers.''

—A September 28, 2000 comment from National Tank Truck Carriers, Inc. (NTTC) which reads the Missouri regulation to prohibit ''the transfer of [a hazardous] product from one container to another.'' NTTC stated that it is ''a national trade association composed of approximately 200 trucking companies which specialize in the transportation of hazardous materials, hazardous wastes and hazardous substances in cargo tank motor vehicles throughout the United States,'' and implied that at least some of its members are affected by the Missouri prohibition against recontainerization of hazardous wastes at a transfer facility. It stated that the Missouri prohibition is preempted by Federal hazardous material transportation law because ''transportation'' includes the ''loading'' and ''unloading'' of hazardous materials incidental to their movement, and Congress has given DOT the ''exclusive power'' to regulate matters involving the ''packing, repacking [and] handling'' of hazardous materials in transportation.

—An undated letter from DNR stating that it has informed Kiesel that ''the off-loading of hazardous wastes from rail cars onto trucks, is not prohibited by 10 CSR 25–6.263(1)'' and requesting an extension of the comment period ''in the event that Kiesel does not withdraw'' its application. With this undated letter, DNR attached a copy of its September 26, 2000 letter to Kiesel in which DNR stated that it wants to ''work with Kiesel personnel to develop a manifesting protocol to insure all shipments will be accompanied by proper documentation as required by the Department of Transportation, Environmental Protection Agency [EPA], and the Department of Natural Resources (DNR).''

—An October 10, 2000 comment from Safco Safe Transport (Safco), of Seattle, Washington, objecting to an extension of the comment period and questioning whether DNR is attempting to impose additional requirements under a manifest ''protocol'' that goes beyond the HMR or EPA's regulations. Safco did not indicate whether it operates in Missouri.

—An October 12, 2000 letter from Kiesel stating that it had no objection to a 30-day extension of the period to comment on its application in this matter to ''allow further clarification of the position of the Department of Natural Resources and determine if a preemption determination is necessary given the public position of the Department.''

—An October 30, 2000 letter from Kiesel stating that it had received ''written assurances'' from DNR that the prohibition against recontainerization of hazardous wastes ''does not apply to the transfer of hazardous wastes transferred from railcars to trucks.'' Kiesel did not provide a copy of the written assurances it had received from DNR. Kiesel stated that it was withdrawing its application in this matter.

—An undated note from Safco withdrawing its earlier objection to an extension of the comment period and stating that preemption occurs by ''operation of law'' and ''cannot be withdrawn.''

III. Discussion

RSPA does not have any procedure for withdrawing an application for a preemption determination. In the past, RSPA has dismissed proceedings involving a city ordinance that never went into effect, Docket No. PDA–3(RF) (Chester, West Virginia), 59 FR 4962 (Feb. 2, 1994), and a local requirement that was repealed after the application was filed, Docket No. PDA–14(R) (El Paso, Texas), 62 FR 11677 (March 21, 1996). But RSPA has never stated that an applicant can end a preemption proceeding by simply withdrawing its application when a non-Federal requirement on transporting hazardous materials remains in effect.

Unlike a lawsuit, these administrative proceedings are initiated only when RSPA publishes a notice in the **Federal Register** inviting interested persons to comment on an application. 49 U.S.C. 5125(d)(1), 49 CFR 107.203(d), 107.205(b). RSPA may dismiss an application without prejudice and return it to the applicant without publishing a notice in the **Federal Register**. *See* 49 CFR 107.207(b). Moreover, there is no ''default'' suffered in a preemption proceeding if the State, locality, or Indian tribe does not submit comments on an application. *See, e.g.,* PD–5(R), Massachusetts Requirement for an Audible Back-up Alarm on Bulk Tank Carriers Used to Deliver Flammable Material, 58 FR 62702 (Nov. 29, 1993), and IR–27, Colorado Regulations on Transportation of Radioactive Materials, 54 FR 16326 (Apr. 21, 1989), *aff'd, Colorado Pub. Util. Comm'n* v. *Harmon,* 951 F.2d 1571 (10th Cir. 1991), *reversing* No. 88–Z–1524 (D. Colo. 1989).

Any interested person may submit comments on an application for a preemption determination, unlike a lawsuit where the proceedings are limited to the named parties. 49 CFR 107.205(c). And RSPA may go beyond the application and comments to ''initiate an investigation of any statements in an application and utilize * * * any relevant facts obtained by that investigation'' and ''may consider any other source of information.'' 49 CFR 107.207(a). Following issuance of a determination, any ''aggrieved'' person may file a petition for reconsideration, 49 CFR 107.211(a), and any party to the proceeding may ''bring an action for judicial review.'' 49 U.S.C. 5125(f), 49 CFR 107.213.

These differences from a lawsuit are consistent with the very purpose for issuing preemption determinations. RSPA believes that the value in deciding whether a non-Federal requirement is inconsistent with (or preempted by) Federal hazardous material transportation law

> goes beyond the resolution of an individual controversy. At a time when hazardous materials transportation is receiving a great deal of public attention, the forum provides [RSPA] an opportunity to express its views on the proper role of State and local vis-a-vis Federal regulatory activity in this area.

IR–2, Rhode Island Rules and Regulations Governing the Transportation of Liquefied Natural Gas, etc., decision on appeal, 45 FR 71881, 71882 (Oct. 30, 1980).

The manner in which a non-Federal requirement is actually applied or enforced must be considered under the ''obstacle'' test in 49 U.S.C. 5125(a)(2), but not necessarily under the ''dual compliance'' test in § 5125(a)(1) or the ''substantively the same as'' criteria in § 5125(b)(1)(A)–(E). On this point, RSPA previously discussed an ''extreme example [of] the nonimplementation or nonenforcement of a directly conflicting State requirement,'' and found that it ''makes no sense * * * to say that since there is no enforcement there is no conflict.'' *Id.* at 71883. Moreover, a commenter in another proceeding has asserted that a regulation or ordinance is ''enforced'' whenever it remains in effect, because persons feel compelled to comply with the requirement even when there have not been citations or other ''enforcement proceedings.'' Thus, there may be an issue whether a non-Federal requirement is an obstacle to the

safe transportation of hazardous materials and the specific requirements in the HMR, even when not enforced, because the requirement may cause offerors or transporters of hazardous materials to take actions that are not required by the HMR, or refrain from actions that are permitted under the HMR.

While it may not be necessary to look at the actual application of a non-Federal requirement, except when applying the ''obstacle'' test, the words in the requirement always set the scope of the requirement. In some cases, terms may be defined in the statute, regulation, or ordinance. Otherwise, those terms must be given their usual and customary meaning. But RSPA cannot accept efforts to interpret a non-Federal requirement in a manner that ''is in direct conflict with the plain language'' of the State, local, or tribal statute, regulation, or ordinance. PD–14(R), Houston, Texas, Fire Code Requirements on the Storage, Transportation, and Handling of Hazardous Materials, 63 FR 67506, 67510 (Dec. 7, 1998), decision on petition for reconsideration, 64 FR 33949 (June 24, 1999).

Here, both NTTC and Safco appear to support Kiesel's position that RSPA should consider the ''plain language'' of Missouri's prohibition against recontainerization of hazardous waste and find that the Missouri regulation is preempted because it is not substantively the same as Federal requirements on ''the packing, repacking, [and] handling * * * of hazardous material.'' 49 U.S.C. 5125(b)(1)(B). Kiesel also specifically refers to PD–12(R), where the applicant and other persons indicated, without contradiction, that New York's repackaging prohibition prevented a transporter ''from transferring the contents of rail cars into trucks.'' 60 FR at 62536.

To date, very few comments have been submitted on Kiesel's application. Neither Kiesel nor DNR has provided a copy of the ''written assurances'' explaining why the prohibition against recontainerization in 10 CSR 25–6.263(2)(A).10.h would not apply to Kiesel's planned operations, nor has DNR submitted any comments explaining its regulation and why it is not preempted by 49 U.S.C. 5125(b)(1)(B). Under these circumstances, it is appropriate to reopen the comment period rather than simply to proceed to a determination in this proceeding.

IV. Reopening of Comment Periods

The period to submit comments on Kiesel's application is reopened to allow a new initial comment period of 45 days, followed by a 45-day period for rebuttal comments.

All comments should address whether 49 U.S.C. 5125 preempts the prohibition against recontainerization in 10 CSR 25–6.263(2)(A)10.H, and, in the context of the preemption criteria discussed in the August 14, 2000 public notice:

(1) explain the meaning of the Missouri prohibition against recontainerization of hazardous wastes and the manner in which that prohibition is applied and enforced; and

(2) address the assertions in Kiesel's August 30, 2000 letter that the Missouri prohibition against recontainerization precludes a transfer of hazardous waste from a rail car to a motor vehicle and is preempted because it is not substantively the same as RSPA's regulations on the ''packing, repacking, [and] handling * * * of hazardous material.'' 49 U.S.C. 5125(b)(1)(B).

Persons intending to comment should review the standards and procedures governing consideration of applications for preemption determinations, set forth at 49 CFR 107.201–107.211.

Issued in Washington, DC on December 4, 2000.

Robert A. McGuire,

Associate Administrator for Hazardous Materials Safety, Research and Special Programs Administration.

[FR Doc. 00–31477 Filed 12–8–00; 8:45 am]

BILLING CODE 4910–60–P

DEPARTMENT OF TRANSPORTATION

Research and Special Programs Administration (RSPA), DOT

[Docket No. RSPA–00–8452; Notice 1]

Pipeline Safety: Intent To Approve Waiver and Environmental Assessment of Waiver for Duke Energy

AGENCY: Office of Pipeline Safety, Research and Special Programs Administration, DOT.

ACTION: Notice of Intent to Consider Waiver and Environmental Assessment of Waiver.

SUMMARY: The Office of Pipeline Safety (OPS) is conducting a Risk Management Demonstration Program with pipeline operators to determine how risk management might be used to complement and improve the existing Federal pipeline safety regulatory process. OPS selected Duke Energy (Duke) as a candidate for participation in the Demonstration Program; subsequently, OPS and Duke held discussions as part of a consultation process. During the consultation, Duke identified a portion of its system where it believed performing alternative risk control activities in lieu of compliance with current regulations would result in a comparable margin of safety and environmental protection. Duke submitted an application to OPS to temporarily waive certain regulatory requirements relating to class location changes for five locations in a 3-line system, ranging from 0.5 miles to 0.88 miles in length and totaling 12.2 miles in fifteen pipeline segments. Duke had previously reduced the operating pressure along the fifteen segments in accordance with these requirements and seeks to return the pipeline to its historical operating pressure. Duke has completed many of the proposed alternative risk control activities related to assuring integrity of the pipeline in the segments for which regulatory relief is sought. Discussions continue between OPS and Duke regarding programmatic aspects of the company's risk management demonstration project.

This Notice announces OPS's intent to approve a waiver to allow Duke to increase the allowable operating pressure in these fifteen pipe segments. OPS has reviewed the terms of this waiver and found them to be appropriate. Among the terms of the waiver that were crucial to OPS's decision to consider granting the waiver were Duke's selection as a candidate for the Risk Management Demonstration Program, Duke's subsequent participation in the consultation process with an OPS Project Review Team (PRT), the comparable margin of safety and environmental protection provided by the proposed activities, and the expectation that the continuing discussions with Duke may result in approval of their risk management demonstration project. In addition, OPS has found that the overall effect of the waiver is not inconsistent with pipeline safety. If granted, this waiver would expire upon either the approval or disapproval of Duke's risk management demonstration project.

OPS is considering whether or not additional regulations to enhance pipeline integrity in high consequence areas are warranted for natural gas transmission pipelines. Additional information on integrity management rule-related activities is available on the OPS web site at http://ops.dot.gov. Within 90 days of OPS's adoption of new rules related to integrity management of natural gas pipelines,

Duke will be required to re-evaluate the effects of this waiver and report to OPS on whether the terms of the waiver continue to be appropriate and whether the overall effect of the waiver remains consistent with pipeline safety.

This Notice also provides an environmental assessment of Duke's Activities. Based on this environmental assessment, OPS has preliminarily concluded that this waiver will have no significant environmental impacts.

OPS seeks public comment on the proposed waiver and the environmental assessment, so that it may consider and address these comments before making a final decision on this matter.

ADDRESSES: OPS requests that comments to this Notice or about this environmental assessment be submitted on or before January 10, 2001, so they can be considered before a final determination is made whether to grant the waiver to Duke. Written comments should be sent to the Dockets Facility, U.S. Department of Transportation, Plaza 401, 400 Seventh Street, SW., Washington, DC 20590–0001. Comments should identify the docket number RSPA–00–8452. Persons should submit the original comment document and one (1) copy. Persons wishing to receive confirmation of receipt of their comments must include a self-addressed stamped postcard. The Dockets Facility is located on the plaza level of the Nassif Building in Room 401, 400 Seventh Street, SW., Washington, DC. The Dockets Facility is open from 10:00 a.m. to 5:00 p.m., Monday through Friday, except on Federal holidays. You may also submit comments to the docket electronically. To do so, log on to the DMS Web at http://dms.dot.gov. Click on Help & Information to obtain instructions for filing a document electronically.

FOR FURTHER INFORMATION CONTACT: Elizabeth Callsen, OPS, (202) 366–4572, regarding the subject matter of this Notice. Contact the Dockets Unit, (202) 366–5046, for docket material. Comments may also be reviewed online at the DOT Docket Management System website at http://dms.dot.gov/.

SUPPLEMENTARY INFORMATION:

1. Background

The Accountable Pipeline Safety and Partnership Act of 1996 authorizes the Secretary of Transportation to establish risk management demonstration projects in partnership with operators of gas and liquid pipeline facilities, pursuant to U.S.C. § 60126. In 1997, OPS announced that Duke Energy (Duke) and eleven other pipeline companies would be candidates for participation in the Risk Management Demonstration Program.[1] [2] Following this announcement, a consultation process commenced, in which an OPS Project Review Team (PRT) and Duke held discussions on the potential participation of Duke in the Demonstration Program. The consultation process involved technical scrutiny by OPS of Duke's safety practices and pipeline integrity.[3]

During the course of the consultation process, Duke identified seven new Class 2 sites on their 3-line system, comprising twenty-one pipeline segments ranging from 0.5 to 2.7 miles in length where it proposed to conduct risk control alternative activities (the ''Activities '') in lieu of the class location change requirements in 49 CFR 192.611. Fifteen of these segments are located in Tennessee and six are in Kentucky. Operating pressure has already been reduced for the fifteen Tennessee segments, from 1000 psig to 936 psig, pursuant to the requirements of 49 CFR 192.611. Duke submitted an application on October 5, 2000, for a waiver of the requirements of 49 CFR 192.611 for the fifteen Tennessee segments (the ''waiver segments'') while consultative discussions regarding Duke's proposed risk management demonstration project continue. If the waiver is approved, Duke will return the operating pressure along the waiver segments, for which most of the proposed Activities have already been completed, to 1000 psig. This document summarizes OPS's review of the Activities and evaluates the extent to which the terms of this waiver are appropriate and the overall effect of the waiver is not inconsistent with pipeline safety, pursuant to 49 U.S.C. 60118(c).

2. OPS Evaluation of Duke's Proposed Alternative Risk Control Activities

Representatives from OPS Headquarters, OPS Southern Region, and the State of Tennessee evaluated Duke's proposed Activities. OPS has evaluated Duke's current risk assessment and risk control processes, the method Duke used to identify and define the Activities, and the analysis Duke performed when comparing the protection provided by 49 CFR 192.611 to the Activities. The OPS evaluation also included an environmental assessment, which is described in Appendix A of this Notice.

The Duke System transports pressurized natural gas, which is lighter than air and flammable. If released as a result of a pipeline leak or rupture, natural gas can potentially ignite causing fires or explosions, loss of life, and/or damage to property or the environment. Protecting the public and environment through the prevention of pipeline leaks and ruptures is the highest priority for OPS and Duke. A major review criterion for this evaluation was whether the Activities Duke proposes will achieve a margin of safety and environmental protection comparable to that achieved through compliance with 49 CFR 192.611. It is the preliminary opinion of OPS that implementing the proposed Activities will result in a comparable margin of safety and environmental protection.

Once OPS has considered comments it receives in response to this Notice, OPS will make a final determination regarding whether to grant a waiver to Duke to return the operating pressure along the waiver segments to 1000 psig and implement any remaining Activities in lieu of compliance with 49 CFR 192.611.

3. Alternative Risk Control Activity Locations

The proposed Activities focus on controlling risks along fifteen pipeline segments in Tennessee. These waiver segments are located on the three parallel lines 10, 15, and 25, downstream from the Mt. Pleasant Compressor Station. The waiver segments lie in Maury and Williamson Counties, Tennessee. The waiver segments are located at the following specific milepost (M.P.) locations on Line 10, and include the adjacent sections of Lines 15 and 25 in each location:

In Maury County, 1.2 miles southwest of Hollywood, TN—From M.P. 226.47 to M.P. 227.50

In Maury County, one-half mile north of Hollywood, TN—From M.P. 228.49 to M.P. 229.21

In Maury County, one mile east of Union Grove, TN—From M.P. 238.00 to M.P. 238.65

In Maury County, 2.5 miles northwest of Rally Hill, TN—From M.P. 247.78 to M.P. 248.27

In Williamson County, 3.5 miles east-northeast of Arrington, TN—From M.P. 264.03 to M.P. 265.42

[1] *Candidates for the Pipeline Risk Management Demonstration Program* (62 FR 40135, July 25, 1997).

[2] *Pipeline Safety: Remaining Candidates for the Pipeline Risk Management Demonstration Program* (62 FR 53052, October 10, 1997).

[3] The consultation process is in its final stages and the proposed Duke Energy Risk Demonstration Project has been approved by the PRT. Documentation that will formally accept Duke Energy into the Risk Management Demonstration Program is currently being prepared. That documentation will include an order requiring completion of all proposed risk control activities and implementation of measures to evaluate their continued effectiveness.

4. Description of Waiver: Alternative Risk Control Activities Designed To Provide Comparable Margin of Safety

4.1 Current Regulatory Requirements

This section describes the current regulatory requirements in 49 CFR 192.611 governing actions that must be taken by a pipeline operator when population density increases along a pipeline.

OPS categorizes all locations along natural gas pipelines according to the population densities near the pipelines (see 49 CFR 192.5). Locations with the lowest population density (10 or fewer buildings intended for human occupancy within an area that extends 220 yards on either side of the centerline of any continuous one mile length of pipeline) are designated as Class 1. As the population along a pipeline increases, the class location increases. For example, Class 2 locations have more than 10 but fewer than 46 buildings intended for human occupancy. Class 3 locations have 46 or more buildings intended for human occupancy, or are areas where a pipeline lies within 100 yards of either a building or small, well-defined outside area (such as a playground, recreation area, outdoor theater, or other place of public assembly) that is occupied by 20 or more persons on at least 5 days a week for 10 weeks in any 12 month period. Class 4 locations are any class location unit where buildings with four or more stories above ground are prevalent (*e.g.* large office buildings).

All of the Duke waiver pipe segments (identified in Section 3) have changed from Class 1 to Class 2.

Pipeline safety regulations impose more stringent design and operational requirements as the class location increases. When a class location changes to a higher class (*e.g.,* from class 1 to class 2), the operator must reduce the operating pressure on the pipeline to provide an additional margin of safety. The operator may be able to avoid a pressure reduction, in some cases, if a pressure test on the pipe has confirmed that a prescribed safety margin exists. In these cases, if a previous pressure test has not confirmed the prescribed safety margin, then the operator must test the pipe to confirm the margin. In other cases, the operator must reduce the pressure or replace the pipe with new pipe. In the case of the waiver segments, Duke has lowered the operating pressure from 1000 psig to 936 psig.

Duke has stated that in order to provide reliable natural gas service to its customers, it cannot maintain the current pressure reduction along the waiver segments. Consequently, in order to increase pressure and provide reliable service, Duke would be required to replace the pipe in the fifteen waiver segments. By replacing the existing pipe with new pipe that has the prescribed design factor, Duke could eliminate the possibility that defects in the original materials and construction, as well as corrosion that may have occurred since installation, would result in a failure.

4.2 Duke's Proposed Alternative Risk Control Activities

For each waiver segment, Duke proposes to perform the following alternative risk control activities, with the objective of providing a margin of safety and environmental protection comparable to pipe replacement:

1. Internally inspect the waiver segments using geometry and magnetic flux leakage in-line inspection tools, which are not required under current regulations. These tools identify indications of wall loss (*e.g.* corrosion), as well as dents and gouges from initial construction damage or third party excavators working along the pipeline right-of-way. These internal inspections have been performed and the OPS Southern Region has reviewed the inspection results.

2. Internally inspect approximately 166 miles of additional pipe on the three parallel lines in the Mt. Pleasant Discharge. These internal inspections have been performed and the OPS Southern Region has reviewed the inspection results.

3. Investigate dents upon completion of the dent inspections for an extended length of pipe (the ''extended segments'') bordering and including each waiver segment to further extend the benefits of the integrity analysis. The extended segments cover a length of pipe totaling 660 feet on both ends of each waiver segment. These internal inspections have been performed and the OPS Southern Region has reviewed the inspection results.

4. Repair indications of corrosion, existing construction damage, and existing outside force damage identified by the internal inspection using conservative investigation and repair criteria. The criteria used by Duke calls for investigation and repairs of small dents and anomalies that are well below the threshold where pipeline integrity might be compromised.

5. Perform hydrostatic tests of the portions of Line 10 which have not previously been tested to 100 percent (SMYS). This includes two of the waiver segments, 2.5 miles northwest of Rally Hill in Maury County and 3.5 miles east-northeast of Arrington in Williamson County. These hydrostatic tests have been completed.

6. Implement a Communications Plan designed to inform and educate appropriate stakeholders and Duke Energy employees about risk management concepts and the purposes and expected benefits of the Duke Energy Demonstration Project.

7. Perform enhanced damage prevention activities including implementing selected recommendations from a recent study of one-call systems and damage prevention programs best practice, ''Common Ground''. Duke will also install, for a trial period, the TransWave monitoring system covering all of the waiver segments. This system will be tested to determine its reliability and usefulness for detecting third-party encroachments (construction, excavation, etc.) in the pipeline right-of-way.

As part of the company's risk evaluation, Duke has compared the expected risk reduction produced by increasing the operating pressure and implementing the Activities to that which would be achieved by compliance with the current regulations. OPS has reviewed this evaluation and concluded that the Activities will likely achieve a margin of safety and environmental protection comparable to the margin which would be achieved through compliance with 49 CFR 192.611.

5. OPS's Proposed Action

Based on OPS's evaluation of Duke's proposed Activities, OPS is considering granting Duke a waiver from the pressure confirmation and pipe replacement requirements of 49 CFR 192.611. This waiver would accept Duke's implementation of the Activities in lieu of compliance with this requirement and will allow Duke to return the operating pressure in the waiver segments to 1000 psig. In addition, Duke along with OPS, would be required to monitor the Activities' effectiveness.

OPS is considering whether or not additional regulations to enhance pipeline integrity in high consequence areas are warranted for natural gas transmission pipelines. Additional information on integrity management rule-related activities is available on the OPS web site at http://ops.dot.gov. No more than 90 days after OPS adopts new rules related to integrity management of natural gas pipelines, Duke will be required to re-evaluate the terms and effects of this waiver and report to OPS on whether the terms of the waiver continue to be appropriate and whether

the overall effect of the waiver remains consistent with pipeline safety. If, after reviewing the Duke evaluation and report, OPS determines that the terms of the terms of the waiver are no longer appropriate or that the overall effect of the waiver is inconsistent with pipeline safety, OPS will revoke the waiver and require Duke to comply with 49 CFR 192.611 and all other applicable regulations. This waiver will expire upon approval of Duke's risk management demonstration project or in the event that the Duke risk management demonstration project is disapproved. If either of these actions occur earlier than 90 days after OPS adopts new rules related to integrity management of natural gas pipelines, then this re-evaluation will not be required.

6. Regulatory Perspective

Why is OPS Considering This Waiver?

OPS has determined that the terms of the waiver are appropriate and that the overall effect of the waiver is not inconsistent with pipeline safety. The following factors were considered when making this determination:

1. The proposed Activities will provide a comparable margin of safety and protection for the environment and the communities in the vicinity of Duke's pipelines.

2. Duke's risk-based justification of the alternatives to the class location change regulations is technically sound.

3. The fifteen waiver segments have a good integrity history, with no leaks recorded during operation or hydrostatic testing.

4. Duke has internally inspected a total of 191 miles of pipe on the three parallel lines in the Mt. Pleasant discharge, including all of the waiver segments. These inspections provide added protection against pipeline failures from corrosion, manufacturing and construction defects, and outside third-party damage along the full 191 mile length. Compliance with 49 CFR 192.611 would require replacement of pipe within the waiver segments only (approximately 12 miles of pipe) with no added protection for the extended segments (approximately 181 miles of pipe). The proposed Activities provide added protection by including the additional pipe. Duke also conducted hydrostatic tests to 100% SMYS on Line 10. In addition, Duke has installed the TransWave system and will be evaluating it over the coming year.

5. Duke was selected as a candidate for the Risk Management Demonstration Program and has participated in a rigorous consultation process with OPS, which included an enhanced sharing with OPS of information related to the integrity Duke's pipeline. The consultation process is nearly complete and may result in acceptance of Duke into the Risk Management Demonstration Program including enforceable commitments for the additional risk control activities.

How Will OPS Oversee the Activities?

OPS retains its authority to enforce Duke's compliance with the pipeline safety regulations. OPS is only considering whether to grant a waiver from compliance with 49 CFR 192.611 at those fifteen segments where Duke has demonstrated that its proposed Activities achieve a comparable margin of safety and environmental protection. Should any information subsequently indicate that the terms of the waiver are no longer appropriate or that the overall effect of the waiver is inconsistent with pipeline safety, then OPS retains its authority to revoke the waiver and require Duke to again comply with 49 CFR 192.611 and all other applicable regulations.

This Notice is OPS's final request for public comment before OPS makes a final decision on granting the waiver to Duke.

Issued in Washington, DC, on December 5, 2000.

Stacey L. Gerard,

Associate Administrator for Pipeline Safety.

[FR Doc. 00–31340 Filed 12–8–00; 8:45 am]

BILLING CODE 4910–60–P

DEPARTMENT OF TRANSPORTATION

Research and Special Programs Administration

[Docket No. RSPA–00–8453; Notice 1]

Pipeline Safety: Intent To Consider Waiver and Environmental Assessment of Waiver for Tennessee Gas Pipeline Company

AGENCY: Office of Pipeline Safety, Research and Special Programs Administration, DOT.

ACTION: Notice of intent to consider waiver and environmental assessment of waiver.

SUMMARY: The Office of Pipeline Safety (OPS) is conducting a Risk Management Demonstration Program with pipeline operators to determine how risk management might be used to complement and improve the existing Federal pipeline safety regulatory process. OPS selected Tennessee Gas Pipeline Company (TGP) as a candidate for participation in the Demonstration Program; subsequently, OPS and TGP held discussions as part of a consultation process. During the consultation, TGP identified a portion of its system where it believed performing alternative risk control activities in lieu of compliance with current regulations would result in a comparable margin of safety and environmental protection. TGP submitted an application to OPS to waive certain regulatory requirements relating to class location changes for four pipeline segments. TGP's application stated that TGP would carry out the proposed alternative risk control activities in lieu of compliance with these regulations.

This Notice announces OPS's intent to consider granting a waiver to allow TGP to perform the proposed alternative risk control activities. OPS has reviewed the terms of this waiver and found them to be appropriate. Among the terms of the waiver that were crucial to OPS's decision to consider granting the waiver were TGP's selection as a candidate for the Risk Management Demonstration Program and TGP's subsequent participation in a consultation process with OPS. In addition, OPS has found that the overall effect of the waiver is not inconsistent with pipeline safety, because TGP's proposed Activities achieve a margin of safety and environmental protection comparable to the margin achieved by compliance with current regulations. Within 90 days of OPS's adoption of new rules related to integrity management of natural gas pipelines [1], TGP will be required to re-evaluate the effects of its proposed alternative risk control activities and report to OPS on whether the terms of the waiver continue to be appropriate and whether the overall effect of the waiver remains consistent with pipeline safety. This Notice also provides an environmental assessment of TGP's Activities. Based on this environmental assessment, OPS has preliminarily concluded that this waiver will have no significant environmental impacts.

OPS seeks public comment on the proposed waiver and the environmental assessment, so that it may consider and address these comments before making a final decision on this matter.

ADDRESSES: OPS requests that comments to this Notice or about this environmental assessment be submitted on or before January 10, 2001, so they can be considered before a final determination is made whether to grant

[1] OPS is considering whether or not additional regulations to enhance pipeline integrity in high consequence areas is warranted for natural gas transmission pipelines. Additional information on integrity management rule-related activities is available on the OPS web site at http://ops.dot.gov.

the waiver to TGP. Written comments should be sent to the Dockets Facility, U.S. Department of Transportation, Plaza 401, 400 Seventh Street, SW., Washington, DC 20590–0001. Comments should identify the docket number RSPA–00–8453. Persons should submit the original comment document and one (1) copy. Persons wishing to receive confirmation of receipt of their comments must include a self-addressed stamped postcard. The Dockets Facility is located on the plaza level of the Nassif Building in Room 401, 400 Seventh Street, SW., Washington, DC. The Dockets Facility is open from 10 a.m. to 5 p.m., Monday through Friday, except on Federal holidays. You may also submit comments to the docket electronically. To do so, log on to the DMS Web at http://dms.dot.gov. Click on Help & Information to obtain instructions for filing a document electronically.

FOR FURTHER INFORMATION CONTACT: Elizabeth Callsen, OPS, (202) 366–4572, regarding the subject matter of this Notice. Contact the Dockets Unit, (202) 366–5046, for docket material. Comments may also be reviewed online at the DOT Docket Management System website at http://dms.dot.gov/.

SUPPLEMENTARY INFORMATION:

1. Background

The Accountable Pipeline Safety and Partnership Act of 1996 authorizes the Secretary of Transportation to establish risk management demonstration projects in partnership with operators of gas and liquid pipeline facilities, pursuant to U.S.C. 60126. In 1997, OPS announced that Tennessee Gas Pipeline Company (TGP) and eleven other pipeline companies would be candidates for participation in the Risk Management Demonstration Program.[2] [3] Following this announcement, a consultation process commenced, in which an OPS Project Review Team (PRT) and TGP held discussions on the potential participation of TGP in the Demonstration Program. The consultation process involved technical scrutiny by OPS of TGP's safety practices and pipeline integrity.

During the course of the consultation process, TGP identified four pipeline segments in its system where it proposed to conduct risk control alternative activities (the ''Activities'') in lieu of the class location change requirements in 49 CFR 192.611. TGP submitted an application [4] for a waiver of the requirements of 49 CFR 192.611 for the four segments (the ''waiver segments'') and implementation of the Activities in lieu of compliance. This document summarizes OPS's review of the Activities and evaluates the extent to which the terms of the waiver are appropriate and the overall effect of the waiver is not inconsistent with pipeline safety pursuant to 49 U.S.C. 60118(c).

2. OPS Evaluation of TGP's Proposed Alternative Risk Control Activities

Representatives from OPS Headquarters and Southern Region evaluated TGP's proposed Activities. OPS met with TGP to discuss the current risk assessment and risk control processes TGP uses, how these processes were used to identify and define the Activities, and the analysis of the protection achieved by the Activities compared to the protection 49 CFR 192.611 provides. The evaluation also included an environmental assessment, which is described in Appendix A of this Notice. (Appendix A is available in the Dockets Facility. See the **ADDRESSES** Section above).

The TGP System transports pressurized natural gas, which is lighter than air and flammable. If released as a result of a pipeline leak or rupture, natural gas can potentially ignite causing fires or explosions. Protection of the public and environment by the prevention of pipeline leaks and ruptures is the highest priority for OPS and TGP. A major review criterion for this evaluation is whether the Activities TGP has proposed will achieve a margin of safety and environmental protection comparable to that achieved through compliance with 49 CFR 192.611. It is the preliminary opinion of OPS that implementing the proposed Activities will result in a comparable margin of safety and environmental protection.

Once OPS has considered comments it receives in response to this Notice, OPS will make a final determination regarding whether to grant a waiver to TGP to allow implementation of the Activities in lieu of compliance with 49 CFR 192.611.

3. Alternative Risk Control Activity Locations

The proposed Activities focus on controlling the risks in four pipeline segments located together in Tennessee. These waiver segments are located on the four parallel Lines 800–1, 500–1, 500–2, and 500–3, approximately 11.2 miles downstream of Compressor Station 860. The waiver segments lie in both Hickman and Dickson Counties, Tennessee. The specific milepost (M.P.) locations and lengths of the four segments are:

Line 800–1: From M.P. 860–1+10.70 to M.P. 860–1+11.60 (4745 feet)
Line 500–1: From M.P. 559–1+10.72 to M.P. 559–1+11.58 (4521 feet)
Line 500–2: From M.P. 559–2+10.77 to M.P. 559–2+11.57 (4200 feet)
Line 500–3: From M.P. 559–3+11.35 to M.P. 559–3+11.64 (1540 feet)

4. Description of Waiver: Alternative Risk Control Activities Designed To Provide Comparable Margin of Safety

4.1 Current Regulatory Requirements

This section describes the current regulatory requirements in 49 CFR 192.611 governing actions that must be taken by a pipeline operator when population density increases along a pipeline.

OPS categorizes all locations along natural gas pipelines according to the population densities near the pipelines (see 49 CFR 192.5). Locations with the lowest population density (10 or fewer buildings intended for human occupancy within an area that extends 220 yards on either side of the centerline of any continuous one mile length pipeline) are designated as Class 1. As the population along a pipeline increases, the class location increases. For example, Class 2 locations have more than 10 but fewer than 46 buildings intended for human occupancy. Class 3 locations have 46 or more buildings intended for human occupancy, or are areas where a pipeline lies within 100 yards of either a building or small, well-defined outside area (such as a playground, recreation area, outdoor theater, or other place of public assembly) that is occupied by 20 or more persons on at least 5 days a week for 10 weeks in any 12 month period. Class 4 locations are any class location unit where buildings with four or more stories above ground are prevalent (*e.g.* large office buildings).

All four of the TGP waiver segments (identified in Section 3) have changed from Class 2 to Class 3.

Pipeline safety regulations impose more stringent design and operational requirements as the class location increases. When a class location changes to a higher class (*e.g.,* from Class 2 to Class 3), the operator must reduce the operating pressure on the pipeline to provide an additional margin of safety. The operator may be able to avoid reducing pressure, in some cases, if a pressure test on the pipe has

[2] Candidates for the Pipeline Risk Management Demonstration Program (62 FR 40135, July 25, 1997).

[3] Pipeline Safety: Remaining Candidates for the Pipeline Risk Management Demonstration Program (62 FR 53052, October 10, 1997).

confirmed that a prescribed safety margin exists. In these cases, if a previous pressure test has not confirmed the prescribed safety margin, then the operator must test the pipe to confirm the margin. In other cases, the operator must reduce the pressure or replace the pipe with new pipe.

TGP has stated that in order to provide reliable natural gas service to its customers, it cannot permanently reduce the operating pressure along the waiver segments. Consequently, in order to meet pipeline safety regulations, TGP would be required to conduct a requalification test or replace the pipe in the four waiver segments. In some portions of the waiver segments, current regulations would require TGP to replace the pipe. In other portions, current regulations allow TGP to conduct a requalification test (TGP has already tested these portions). By replacing the existing pipe with new pipe that has the prescribed design factor, TGP could eliminate the possibility that defects in the original materials and construction, as well as corrosion that may have occurred since installation, would result in a failure. By conducting a requalification test, TGP could verify the pipeline integrity.

4.2 TGP's Proposed Alternative Risk Control Activities

For each waiver segment, TGP proposes to perform the following alternative risk control activities, with the objective of providing a margin of safety and environmental protection comparable to pipe replacement or requalification testing:

5. Internally inspect the waiver segments using geometry and magnetic flux leakage in-line inspection tools, which are not required under current regulations. These tools reliably identify indications of wall loss (*e.g.* corrosion), as well as dents and gouges from initial construction damage or third party excavators working along the pipeline right-of-way. These internal inspections have been performed and the OPS Southern region has reviewed the inspection results.

6. Internally inspect an extended length of pipe (the ''extended segments'') bordering each waiver segment to further extend the benefits of the integrity analysis. The extended segments cover the distance between Compressor Station 860 and mainline valves 861–1, 560–1, 560–2, and 560–3, a distance of approximately 18.2 miles on each pipeline.

7. Repair indications of corrosion, existing construction damage, and existing outside force damage identified by the internal inspection. TGP used more conservative investigation and repair criteria in the waiver segments and extended segments than is currently required by the regulations. The criteria call for investigation and repairs of small dents and anomalies that are well below the threshold where pipeline integrity might be compromised.

8. Perform close-interval surveys on the waiver segments and extended segments, as an additional method to detect possible pipeline corrosion. Close-interval surveys are not required on these segments under current regulations. TGP has performed close-interval surveys on approximately 18.2 miles of pipe on each line .

OPS has compared the expected risk reduction produced by the Activities to that which would be achieved by compliance with current regulations and concluded that the Activities will likely achieve a margin of safety and environmental protection comparable to the margin which would be achieved through compliance with 49 CFR 192.611. Furthermore, because of the resources saved by not having to replace pipe in the waiver segments, TGP will be able to assess the integrity of additional portions of its system, which reduces the overall risks along the TGP pipeline system.

5. OPS's Proposed Action

Based on OPS's evaluation of TGP's proposed Activities, OPS is considering granting TGP a waiver from the pressure confirmation and pipe replacement requirements of 49 CFR 192.611.

This waiver accepts TGP's implementation of the Activities in lieu of compliance with this requirement. In addition, TGP along with OPS, would be required to monitor the Activities' effectiveness.

No more than 90 days after OPS adopts new rules related to integrity management of natural gas pipelines, TGP will be required to re-evaluate the terms and effects of this waiver and report to OPS on whether the terms of the waiver continue to be appropriate and whether the overall effect of the waiver remains consistent with pipeline safety. If, after reviewing the TGP evaluation and report, OPS determines that the terms of the waiver are no longer appropriate or that the overall effect of the waiver is inconsistent with pipeline safety, OPS will revoke the waiver and require TGP to comply with 49 CFR 192.611 and all other applicable regulations.

6. Regulatory Perspective

Why Is OPS Considering This Waiver?

OPS has determined that the terms of the waiver are appropriate and that the overall effect of the waiver is not inconsistent with pipeline safety. The following factors were considered when making this determination:

1. The proposed activities will provide comparable margin of safety and protection for the environment and the communities in the vicinity of TGP's pipelines;

2. The four waiver segments have a good integrity history, with no leaks recorded during operation or hydrostatic testing.

3. TGP has internally inspected and conducted close-interval surveys on a total of 72.8 miles of pipe, including the waiver segments. These activities add protection against pipeline failures from corrosion, manufacturing and construction defects, and outside third-party damage along this full 72.8 mile length. Compliance with 49 CFR 192.611 would require replacement of pipe or requalification tests within the waiver segments only (less than 3 miles of pipe), with no added protection for the extended segments (approximately 69 miles of pipe). The TGP Activities provide added protection by including the extended segments.

4. TGP was selected as a candidate for the Risk Management Demonstration Program and has participated in a consultation process with OPS, which included an enhanced sharing with OPS of information related to the integrity TGP's pipeline.

How Will OPS Oversee the Activities?

OPS retains its authority to enforce TGP's compliance with the pipeline safety regulations. OPS is only considering whether to grant a waiver from compliance with 49 CFR 192.611 at those four segments where TGP has demonstrated that its proposed Activities achieve a comparable margin of safety and environmental protection. Should any information subsequently indicate that the terms of the waiver are no longer appropriate or that the overall effect of the waiver is inconsistent with pipeline safety, then OPS retains its authority to revoke the waiver and require TGP to again comply with 49 CFR 192.611 and all other applicable regulations.

This Notice is OPS's final request for public comment before OPS makes a final decision on whether to grant the waiver to TGP.

Issued in Washington, DC, on December 5, 2000.

Stacey L. Gerard,

Associate Administrator for Pipeline Safety.

[FR Doc. 00–31339 Filed 12–8–00; 8:45 am]

BILLING CODE 4910–60–U

DEPARTMENT OF TRANSPORTATION

Surface Transportation Board

[STB Finance Docket No. 33944]

Texas Pacifico Transportation, Ltd.—Lease [1] and Operation Exemption—State of Texas

Texas Pacifico Transportation, Ltd. (Pacifico), a noncarrier Texas limited partnership, has filed a notice of exemption under 49 CFR 1150.31 to lease from the State of Texas, acting by and through the Texas Department of Transportation (TxDOT), and to operate as a common carrier approximately 370.5 miles of rail line in Brewster, Coleman, Crane, Crockett, Irion, Pecos, Presidio, Reagan, Runnels, Tom Green, and Upton Counties, TX.[2] Pacifico would acquire the right to operate between milepost 1029.1 on the International Bridge near Presidio, TX, and milepost 956.7 at Paisano Junction, and between milepost 945.3, at Alpine Junction, and milepost 0 + 330 feet, near San Angelo Junction on the east, and Lampasas Subdivision milepost 373 + 4362 feet, near San Angelo Junction on the west. According to Pacifico, SORC has assigned to Pacifico, with the consent of the Union Pacific Railroad Company (UP), SORC's trackage rights over an additional 11.4 miles of UP line located between milepost 956.7 at Paisano Junction and milepost 945.3 at Alpine Junction. The operations by Pacifico would thus extend over approximately 381.9 miles. Pacifico states that its projected revenues will not exceed those of a Class III rail carrier as a result of this transaction.[3]

The transaction was expected to be consummated on or after November 29, 2000.

If the notice contains false or misleading information, the exemption is void *ab initio.* Petitions to revoke the exemption under 49 U.S.C. 10502(d) may be filed at any time. The filing of a petition to revoke will not automatically stay the transaction.

An original and 10 copies of all pleadings, referring to STB Finance Docket No. 33944, must be filed with the Surface Transportation Board, Office of the Secretary, Case Control Unit, 1925 K Street, NW, Washington, DC 20423–0001. In addition, a copy of each pleading must be served on Fritz R. Kahn, Esq., 1920 N Street, NW (8th floor), Washington, DC 20036–1601.

Board decisions and notices are available on our website at ''www.stb.dot.gov.''

Decided: December 4, 2000.

By the Board, David M. Konschnik, Director, Office of Proceedings.

Vernon A. Williams,

Secretary.

[FR Doc. 00–31343 Filed 12–8–00; 8:45 am]

BILLING CODE 4915–00–P

[1] The filed notice is captioned as an ''acquisition'' and operation exemption, but the described transaction involves a lease. Accordingly, this notice has been re-captioned to reflect the lease.

[2] TxDOT acquired the rail line between milepost 1029.1 and milepost 956.7 from South Orient Railroad Company, Ltd. (SORC), pursuant to the transaction that was the subject of a notice of exemption in *State of Texas Acting by and Through the Texas Department of Transportation—Acquisition and Operation Exemption—South Orient Railroad Company, Ltd.,* STB Finance Docket No. 33946 (STB served Nov. 2, 2000).

[3] Earlier this year, Pacifico had evidently planned to acquire SORC's rights to operate over these lines directly from SORC. *See Texas Pacifico Transportation, Ltd.—Acquisition and Operation Exemption—South Orient Railroad Company, Ltd.,* STB Finance Docket No. 33851 (STB served Mar. 3, 2000). According to Pacifico, the previously authorized transaction was never consummated and did not result in the initiation of railroad operations.

DEPARTMENT OF THE TREASURY

Submission for OMB review; comment request

November 30, 2000.

The Department of Treasury has submitted the following public information collection requirement(s) to OMB for review and clearance under the Paperwork Reduction Act of 1995, Public Law 104–13. Copies of the submission(s) may be obtained by calling the Treasury Bureau Clearance Officer listed. Comments regarding this information collection should be addressed to the OMB reviewer listed and to the Treasury Department Clearance Officer, Department of the Treasury, Room 2110, 1425 New York Avenue, NW., Washington, DC 20220.

DATES: Written comments should be received on or before January 10, 2001.

Internal Revenue Service (IRS)

OMB Number: 1545–1151.

Form Number: IRS Form 8818.

Type of Review: Extension.

Title: Optional Form to Record Redemption of Series EE and I U.S. Savings Bonds Issued After 1989.

Description: Under Internal Revenue Code section 135, if an individual redeems U.S. Savings Bonds issued after 1989 and pays qualified higher education expenses during the year, the interest on the bonds is excludable from income. Form 8818 can be used to keep a record of the bonds cashed so that the taxpayer can claim the proper interest exclusion.

Respondents: Individuals or households.

Estimated Number of Respondents/Recordkeepers: 25,000.

Estimated Burden Hours Per Respondent/Recordkeeper:

	Minutes
Recordkeeping	13
Learning about the law or the form	5
Preparing the form	21

Frequency of Response: On occasion.

Estimated Total Reporting/Recordkeeping Burden: 32,000 hours.

OMB Number: 1545–1567.

Form Number: IRS Form 8854.

Type of Review: Extension.

Title: Expatriation Information Statement.

Description: Internal Revenue Code Section 6039G requires persons who lost U.S. citizenship to provide information concerning citizenship, income tax liability, net worth, and net assets. Form 8854 is used to report this information.

Respondents: Individuals or households.

Estimated Number of Respondents/Recordkeepers: 11,000.

Estimated Burden Hours Per Respondent/Recordkeeper:

	Part I (in minutes)	Parts I and II
Recordkeeping	33	2 hr., 57 min.
Learning about the law or the form	13	26 min.
Preparing the form	40	1 hr., 24 min.
Copying, assembling, and sending the form to the IRS	20	35 min.

Frequency of Response: Other (Once).

Estimated Total Reporting/Recordkeeping Burden: 23,060 hours.

Clearance Officer: Garrick Shear, Internal Revenue Service, Room 5244, 1111 Constitution Avenue, NW, Washington, DC 20224

OMB Reviewer: Alexander T. Hunt, (202) 395–7860, Office of Management and Budget, Room 10202, New Executive Office Building, Washington, DC 20503

Lois K. Holland,

Departmental Reports Management Officer.

[FR Doc. 00–31375 Filed 12–8–00; 8:45 am]

BILLING CODE 4830–01–U

DEPARTMENT OF THE TREASURY

Submission for OMB Review; Comment Request

December 5, 2000.

The Department of Treasury has submitted the following public information collection requirement(s) to OMB for review and clearance under the Paperwork Reduction Act of 1995, Public Law 104–13. Copies of the submission(s) may be obtained by calling the Treasury Bureau Clearance Officer listed. Comments regarding this information collection should be addressed to the OMB reviewer listed and to the Treasury Department Clearance Officer, Department of the Treasury, Room 2110, 1425 New York Avenue, NW., Washington, DC 20220.

DATES: Written comments should be received on or before January 10, 2001, to be assured of consideration.

Internal Revenue Service (IRS)

OMB Number: 1545–1701.

Revenue Procedure Number: Revenue Procedure 2000–37.

Type of Review: Extension.

Title: Reverse Like-Kind Exchanges.

Description: The revenue procedure provides a safe harbor for reverse like-kind exchanges under which a transaction using a ''qualified exchange accommodation agreement'' will qualify for non-recognition treatment under § 1031 of the Internal Revenue Code.

Respondents: Business or other for-profit, Individuals or households, farms.

Estimated Number of Respondents/Recordkeepers: 1,600.

Estimated Burden Hours Per Respondent/Recordkeeper: 2 hours.

Frequency of Response: Other (one time per transaction).

Estimated Total Reporting/Recordkeeping Burden: 3,200 hours.

Clearance Officer: Garrick Shear, Internal Revenue Service, Room 5244, 1111 Constitution Avenue, NW, Washington, DC 20224

OMB Reviewer: Alexander T. Hunt, (202) 395–7860, Office of Management and Budget, Room 10202, New Executive Office Building, Washington, DC 20503

Lois K. Holland,

Departmental Reports Management Officer.

[FR Doc. 00–31376 Filed 12–8–00; 8:45 am]

BILLING CODE 4830–01–U

DEPARTMENT OF THE TREASURY

Bureau of Alcohol, Tobacco and Firearms

Proposed Collection; Comment Request

ACTION: Notice and request for comments.

SUMMARY: The Department of the Treasury, as part of its continuing effort to reduce paperwork and respondent burden, invites the general public and other Federal agencies to take this opportunity to comment on proposed and/or continuing information collections, as required by the Paperwork Reduction Act of 1995, Public Law 104–13 (44 U.S.C. 3506(c)(2)(A)). Currently, the Bureau of Alcohol, Tobacco and Firearms within the Department of the Treasury is soliciting comments concerning the Brewer's Operations Reports.

DATES: Written comments should be received on or before February 9, 2001 to be assured of consideration.

ADDRESSES: Direct all written comments to Bureau of Alcohol, Tobacco and Firearms, Linda Barnes, 650 Massachusetts Avenue, NW., Washington, DC 20226, (202) 927–8930.

FOR FURTHER INFORMATION CONTACT: Requests for additional information or copies of the form(s) and instructions should be directed to William H. Foster, Regulations Division, 650 Massachusetts Avenue, NW., Washington, DC 20226, (202) 927–8210.

SUPPLEMENTARY INFORMATION:

Title: Brewer's Operations Report.

OMB Number: 1512–0052.

Form Number: ATF F 5130.9, Brewer's Report of Operations and ATF F 5130.26, Brewpub Report of Operations.

Abstract: The Internal Revenue Code requires brewers to pay excise taxes on beer they remove for consumption or sale. The tax is imposed by 26 U.S.C. 5051. Related operational requirements are imposed by Section 5415, including a requirement to report production and other elements of brewery operations to ATF. Brewers must file operations reports for various periods, depending on the quantity of beer they produce. The reports must be available for inspection by ATF officers during normal business hours. The brewers must keep the reports for a period of 3 years.

Current Actions: The Brewer's Report of Operations, ATF F 5130.9 is being reduced in size and a new form, ATF F 5130.26, Brewpub Report of Operations is being created for certain smaller brewers whose production is not more than 5,000 barrels per year and who do not bottle or keg their beer. Both forms are in the plain language style, include more extensive instructions, and eliminate current formatting deficiencies. There is an increase in burden hours.

Type of Review: Revision.

Affected Public: Business or other for-profit.

Estimated Number of Respondents: 1,750.

Estimated Time Per Respondent: 30 minutes for each ATF F 5130.26 and 45 minutes for each ATF F 5130.9.

Estimated Total Annual Burden Hours: 5,405.

Request for Comments: Comments submitted in response to this notice will be summarized and/or included in the request for OMB approval. All comments will become a matter of public record. Comments are invited on: (a) Whether the collection of information is necessary for the proper performance of the functions of the agency, including whether the information shall have practical utility; (b) the accuracy of the agency's estimate of the burden of the collection of information; (c) ways to enhance the quality, utility, and clarity of the information to be collected; (d) ways to minimize the burden of the collection of information on respondents, including through the use of automated collection techniques or other forms of information technology; and (e) estimates of capital or start-up costs and costs of operation, maintenance, and purchase of services to provide information.

Dated: September 4, 2000.

William T. Earle,

Assistant Director (Management) CFO.

[FR Doc. 00–31474 Filed 12–8–00; 8:45 am]

BILLING CODE 4810–31–P

DEPARTMENT OF THE TREASURY

Bureau of Alcohol, Tobacco and Firearms

Proposed Collection; Comment Request

ACTION: Notice and request for comments.

SUMMARY: The Department of the Treasury, as part of its continuing effort to reduce paperwork and respondent burden, invites the general public and other Federal agencies to take this opportunity to comment on proposed and/or continuing information collections, as required by the Paperwork Reduction Act of 1995, Public Law 104–13 (44 U.S.C. 3506(c)(2)(A)). Currently, the Bureau of Alcohol, Tobacco and Firearms within the Department of the Treasury is soliciting comments concerning the Brewer's Bonds and Continuation Certificates.

DATES: Written comments should be received on or before February 9, 2001 to be assured of consideration.

ADDRESSES: Direct all written comments to Bureau of Alcohol, Tobacco and Firearms, Linda Barnes, 650 Massachusetts Avenue, NW., Washington, DC 20226, (202) 927–8930.

FOR FURTHER INFORMATION CONTACT: Requests for additional information or copies of the form(s) and instructions should be directed to William H. Foster, Regulations Division, 650 Massachusetts Avenue, NW., Washington, DC 20226, (202) 927–8210.

SUPPLEMENTARY INFORMATION:

Title: Brewer's Bonds and Continuation Certificates.

OMB Number: 1512–0081.

Form Number: ATF F 5130.22, Brewer's Bond, ATF F 5130.23, Brewer's Bond Continuation Certificate, ATF F 5130.25, Brewer's Collateral Bond, ATF F 5130.27, Brewer's Collateral Bond Continuation Certificate.

Abstract: The Internal Revenue Code requires brewers to give a bond to protect the revenue and to ensure compliance with the requirements of laws and regulations. Bonds and continuation certificates are required by law and are necessary to protect government interests in the excise tax revenues that brewers pay. Brewer's must keep their current bonds for as long as the brewery is in operation.

Current Actions: ATF F 5130.25, Brewer's Collateral Bond is a new form that replaces the attachments, strikeouts and insertions of the existing surety bond, ATF F 5130.22 with a correct and easy-to-use form to meet the requirements of 26 U.S.C. 5401 with collateral transactions instead of a surety bond. ATF F 5130.27, Brewer's Collateral Bond Continuation Certificate is a new form in which a brewer has the option of using this form in order to continue the collateral bond for 4 years. ATF F 5130.22, Brewer's Bond has been revised to include additional instructions that are more easily understood and the entire form has been rewritten in the plain language format. ATF F 5130.23, Brewer's Bond Continuation Certificate has been rewritten in the plain language format and the collateral option transaction has been placed in the new ATF F 5130.27. ATF estimates that the forms will reduce the burden by 25% for each individual, depending on circumstances. The total burden will increase, however, since there is a significant increase in the number of brewers since the last submission.

Type of Review: Revision.

Affected Public: Business or other for-profit.

Estimated Number of Respondents: 1,750.

Estimated Time Per Respondent: 45 minutes per form.

Estimated Total Annual Burden Hours: 600

Request for Comments: Comments submitted in response to this notice will be summarized and/or included in the request for OMB approval. All comments will become a matter of public record. Comments are invited on: (a) Whether the collection of information is necessary for the proper performance of the functions of the agency, including whether the information shall have practical utility; (b) the accuracy of the agency's estimate of the burden of the collection of information; (c) ways to enhance the quality, utility, and clarity of the information to be collected; (d) ways to minimize the burden of the collection of information on respondents, including through the use of automated collection techniques or other forms of information technology; and (e) estimates of capital or start-up costs and costs of operation, maintenance, and purchase of services to provide information.

Dated: December 4, 2000.

William T. Earle,

Assistant Director (Management), CFO.

[FR Doc. 00–31475 Filed 12–8–00; 8:45 am]

BILLING CODE 4810–31–P

DEPARTMENT OF THE TREASURY

Office of Thrift Supervision

Proposed Agency Information Collection Activities; Comment Request

ACTION: Notice and request for comments.

SUMMARY: The Department of the Treasury, as part of its continuing effort to reduce paperwork and respondent burden, invites the general public and other Federal agencies to comment on proposed and continuing information collections, as required by the Paperwork Reduction Act of 1995, Public Law 104–13. Today, the Office of Thrift Supervision within the Department of the Treasury solicits comments on Minimum Security Devices and Procedures.

DATES: Submit written comments on or before February 9, 2001.

ADDRESSES: *Mail:* Send comments to Manager, Dissemination Branch, Information Management and Services Division, Office of Thrift Supervision, 1700 G Street, NW., Washington, DC 20552, Attention 1550–0062.

Delivery: Hand deliver comments to the Guard's Desk, East Lobby Entrance, 1700 G Street, NW., from 9:00 a.m. to 4:00 p.m. on business days, Attention 1550–0062.

Facsimiles: Send facsimile transmissions to FAX Number (202) 906–7755, Attention 1550–0062; or (202) 906–6956 (if comments are over 25 pages).

E-Mail: Send e-mails to ''public.info@ots.treas.gov'', Attention 1550–0062, and include your name and telephone number.

Public Inspection: Interested persons may inspect comments at the Public Reference Room, 1700 G St. NW., from 10:00 a.m. until 4:00 p.m. on Tuesdays and Thursdays or obtain comments and/or an index of comments by facsimile by telephoning the Public Reference Room at (202) 906–5900 from 9:00 a.m. until 5:00 p.m. on business days. Comments and the related index will also be posted on the OTS Internet Site at ''www.OTS.treas.gov''.

FOR FURTHER INFORMATION CONTACT: Richard Riese, Supervision, Office of Thrift Supervision, 1700 G Street, NW., Washington, DC 20552, (202) 906–6134.

SUPPLEMENTARY INFORMATION:

Title: Minimum Security Devices and Procdures.

OMB Number: 1550–0062.

Form Number: Not applicable.

Abstract: The Bank Protection Act and OTS implementing regulations

require thrifts to establish security devices and procedures. Written security programs allow OTS to evaluate whether thrifts have adopted policies and procedures to ensure compliance with the law and regulations. FDIC, OCC and FRB have substantially similar regulations.

Current Actions: OTS proposes to renew this information collection without revision.

Type of Review: Renewal.

Affected Public: Business or For Profit.

Estimated Number of Respondents: 1,080.

Estimated Time Per Respondent: 2 hours.

Estimated Total Annual Burden Hours: 2,160 hours.

Request for Comments: The OTS will summarize comments submitted in response to this notice or will include these comments in its request for OMB approval. All comments will become a matter of public record. The OTS invites comment on: (a) Whether the collection of information is necessary for the proper performance of the functions of the agency, including whether the information shall have practical utility; (b) the accuracy of the agency's estimate of the burden of the collection of information; (c) ways to enhance the quality; (d) ways to minimize the burden of the collection of information on respondents, including the use of automated collection techniques or other forms of information technology; and (e) estimates of capital or starting costs and costs of operation, maintenance, and purchase of services to provide information.

Dated: December 5, 2000.

John E. Werner,

Director, Information & Management Services Division.

[FR Doc. 00–31473 Filed 12–8–00; 8:45 am]

BILLING CODE 6720–01–P

Corrections

Federal Register

Vol. 65, No. 238

Monday, December 11, 2000

This section of the FEDERAL REGISTER contains editorial corrections of previously published Presidential, Rule, Proposed Rule, and Notice documents. These corrections are prepared by the Office of the Federal Register. Agency prepared corrections are issued as signed documents and appear in the appropriate document categories elsewhere in the issue.

ENVIRONMENTAL PROTECTION AGENCY

40 CFR Part 261

[SW–FRL–6904–3]

Hazardous Waste Management System; Proposed Exclusion for Identification and Listing Hazardous Waste

Correction

In proposed rule document 00–29647 beginning on page 75897 in the issue of Tuesday, December 5, 2000, make the following correction:

On page 75897, in the third column, in the **DATES** section, in the last line, ''January 19, 2000'' should read ''January 19, 2001''.

[FR Doc. C0–29647 Filed 12–8–00; 8:45 am]

BILLING CODE 1505–01–D

PENSION BENEFIT GUARANTY CORPORATION

29 CFR Parts 4006 and 4007

RIN 1212-AA58

Premium Rates; Payment of Premium

Correction

In rule document 00–30322 beginning on page 75160, in the issue of Friday, December 1, 2000, make the following corrections:

1. On page 75161, in the third column, in the first full paragraph, in the eighth line and in the 10th line, ''3 1/12'' should read '' 3/12''.

[FR Doc. C0–30322 Filed 12–8–00; 8:45 am]

BILLING CODE 1505–01–D

SECURITIES AND EXCHANGE COMMISSION

[Release No. 34–43614; File No. SR–Phlx–00–101]

Self-Regulatory Organizations; Notice of Filing and Immediate Effectiveness of Proposed Rule Change by the Philadelphia Stock Exchange, Inc. Extending the Pilot Program for Exchange Rule 98, Emergency Committee Until April 30, 2001

November 22, 2000.

Correction

In notice document 00–30667 beginning on page 75332 in the issue of Friday, December 1, 2000, the date is added to read as set forth above.

[FR Doc. C0–30667 Filed 12–8–00; 8:45 am]

BILLING CODE 1505–01–D

Federal Register

Monday,
December 11, 2000

Part II

Department of Education

34 CFR Part 373

Special Demonstration Programs; Final Rule

DEPARTMENT OF EDUCATION

34 CFR Part 373

Special Demonstration Programs

AGENCY: Office of Special Education and Rehabilitative Services, Department of Education.

ACTION: Final regulations.

SUMMARY: The Secretary issues regulations governing the Special Demonstration Programs. These regulations are needed to implement changes in the Rehabilitation Act Amendments of 1998. The regulations provide definitions and requirements for grants and contracts under the expanded authority of the Special Demonstration Programs.

DATES: These regulations are effective January 10, 2001.

FOR FURTHER INFORMATION CONTACT: Thomas E. Finch, Ph.D., U.S. Department of Education, 400 Maryland Avenue, SW., room 3038 MES, Washington, DC 20202–2575. Telephone: (202) 205–8292. If you use a telecommunications device for the deaf (TDD), you may call the Federal Information Relay Service (FIRS) at 1–800–877–8339.

Individuals with disabilities may obtain this document in an alternative format (*e.g.,* Braille, large print, audiotape, or computer diskette) on request to the contact person listed in the preceding paragraph.

SUPPLEMENTARY INFORMATION: These regulations implement changes to the Rehabilitation Act of 1973, as amended (Act), made by the Rehabilitation Act Amendments of 1998, enacted as part of the Workforce Investment Act of 1998 (Pub. L. 105–220), on August 7, 1998, and as further amended in 1998 by technical amendments in the Reading Excellence Act and the Carl D. Perkins Vocational and Applied Technology Education Act Amendments of 1998 (hereinafter collectively referred to as the 1998 Amendments).

On June 23, 2000 we published a notice of proposed rulemaking (NPRM) for the Special Demonstration Programs in the **Federal Register** (65 FR 39252). In the preamble to the NPRM, we noted that section 303(b) of the Act, which contains the authority for these programs, had undergone considerable changes. While continuing to focus on the expansion and improvement of rehabilitation services, the Special Demonstration Programs now include the expansion and improvement of other services authorized under the Act.

In addition to reflecting this statutory change in the purpose of the Special Demonstration Programs, these regulations have been designed to give the Secretary greater flexibility in making awards that are relevant and responsive to the needs of individuals with disabilities. The following overview, which was originally contained in the preamble to the NPRM (pages 39252 and 39253), describes the benefits of the regulations:

Section 373.2 provides additional flexibility in determining eligible entities.

Section 373.4 contains terms from the Act and other terms that may be used in applying for a grant and administering a grant project.

Section 373.6 permits the Secretary to meet the current trends and needs relative to services for individuals with disabilities and on accepted methods of improving and expanding those services. In addition, the Secretary may announce priorities without further public comment. Additional information and requirements pertinent to the priorities will be announced in the **Federal Register** and in the application package for a given competition.

Section 373.11 permits the Secretary to inform the potential applicant of information the Secretary may consider, in addition to the peer review scores, when making an award.

Section 373.20 permits the Secretary to institute a matching requirement not to exceed 10 percent of the total project costs. The matching funds may be provided in cash or in-kind.

Section 373.21 informs grantees under section 306 of the Act that the Secretary may require that recipients of grants under this title submit information, including data, necessary to measure project outcomes and performance, including any data needed to comply with the Government Performance and Results Act of 1993 (GPRA). We are developing a uniform data collection instrument for future use by grantees under this program. This instrument will be published in the **Federal Register** for public comment. The inclusion of § 373.21 emphasizes the authority for the Secretary to require needed information.

Section 373.22 limits indirect cost reimbursement for grants under this program to the recipient's actual indirect costs, as determined by its negotiated indirect cost rate agreement, or 10 percent of the total direct cost base, whichever amount is less.

Section 373.23 lists additional requirements for grantees.

There are no differences between the NPRM and these final regulations.

Public Comment

In the NPRM we invited comments on the proposed regulations. We did not receive any substantive comments.

National Education Goals

The eight National Education Goals focus the Nation's education reform efforts and provide a framework for improving teaching and learning.

These regulations address the National Education Goal that every adult American will possess the knowledge and skills necessary to compete in a global economy. These regulations further the objectives of this goal by implementing programs to provide vocational rehabilitation services and other services to provide increased employment opportunities for individuals with disabilities.

Paperwork Reduction Act of 1995

These regulations do not contain any information collection requirements.

Intergovernmental Review

This program is subject to Executive Order 12372 and the regulations in 34 CFR part 79. One of the objectives of the Executive order is to foster an intergovernmental partnership and a strengthened federalism. The Executive order relies on processes developed by State and local governments for coordination and review of proposed Federal financial assistance.

This document provides early notification of our specific plans and actions for this program.

Assessment of Educational Impact

In the NPRM we requested comments on whether the proposed regulations would require transmission of information that any other agency or authority of the United States gathers or makes available.

Based on the response to the NPRM and on our review, we have determined that these final regulations do not require transmission of information that any other agency or authority of the United States gathers or makes available.

Electronic Access to This Document

You may view this document, as well as all other Department of Education documents published in the **Federal Register**, in text or Adobe Portable Document Format (PDF) on the Internet at either of the following sites:

http://ocfo.ed.gov/fedreg.htm
http://www.ed.gov/news.html

To use PDF you must have Adobe Acrobat Reader, which is available free at either of the previous sites. If you

have questions about using PDF, call the U.S. Government Printing Office (GPO), toll free, at 1–888–293–6498; or in the Washington, DC, area at (202) 512–1530.

Note: The official version of this document is the document published in the **Federal Register**. Free Internet access to the official edition of the **Federal Register** and the Code of Federal Regulations is available on GPO Access at:

http://www.access.gpo.gov/nara/index.html

(Catalog of Federal Domestic Assistance Number 84.235 Special Demonstration Program)

List of Subjects in 34 CFR Part 373

Grant programs—education, Vocational rehabilitation.

Dated: December 5, 2000.

Judith E. Heumann,

Assistant Secretary for Special Education and Rehabilitative Services.

For the reasons discussed in the preamble, the Secretary amends title 34 of the Code of Federal Regulations by adding a new part 373 to read as follows:

PART 373—SPECIAL DEMONSTRATION PROGRAMS

Subpart A—General

Sec.
373.1 What is the purpose of the Special Demonstration Programs?
373.2 Who is eligible for assistance?
373.3 What regulations apply?
373.4 What definitions apply?
373.5 Who is eligible to receive services and to benefit from activities conducted by eligible entities?
373.6 What are the priorities and other factors and requirements for competitions?

Subpart B—How Does the Secretary Make a Grant?

373.10 What selection criteria does the Secretary use?
373.11 What other factors does the Secretary consider when making a grant?

Subpart C—What Conditions Must Be Met by a Grantee?

373.20 What are the matching requirements?
373.21 What are the reporting requirements?
373.22 What are the limitations on indirect costs?
373.23 What additional requirements must be met?
373.24 What are the special requirements pertaining to the protection, use, and release of personal information?

Authority: 29 U.S.C. 773(b), unless otherwise noted.

Subpart A—General

§ 373.1 What is the purpose of the Special Demonstration Programs?

The purpose of this program is to provide competitive grants to, or enter into contracts with, eligible entities to expand and improve the provision of rehabilitation and other services authorized under the Rehabilitation Act of 1973, as amended (Act), or to further the purposes and policies in sections 2(b) and (c) of the Act by supporting activities that increase the provision, extent, availability, scope, and quality of rehabilitation services under the Act, including related research and evaluations activities.

(Authority: 29 U.S.C. 701(b) and (c), 711(c), and 773(b))

§ 373.2 Who is eligible for assistance?

(a) The following types of organizations are eligible for assistance under this program:

(1) State vocational rehabilitation agencies.

(2) Community rehabilitation programs.

(3) Indian tribes or tribal organizations.

(4) Other public or nonprofit agencies or organizations, including institutions of higher education.

(5) For-profit organizations, if the Secretary considers them to be appropriate.

(6) Consortia that meet the requirements of 34 CFR 75.128 and 75.129.

(7) Other organizations identified by the Secretary and published in the **Federal Register**.

(b) In competitions held under this program, the Secretary may limit competitions to one or more types of these organizations.

(Authority: 29 U.S.C. 711(c) and 773(b)(2))

§ 373.3 What regulations apply?

The following regulations apply to this program:

(a) The Education Department General Administrative Regulations (EDGAR) as follows:

(1) 34 CFR part 74 (Administration of Grants and Agreements with Institutions of Higher Education, Hospitals, and other Non-profit Organizations).

(2) 34 CFR part 75 (Direct Grant Programs).

(3) 34 CFR part 77 (Definitions that Apply to Department Regulations).

(4) 34 CFR part 79 (Intergovernmental Review of Department of Education Programs and Activities).

(5) 34 CFR part 80 (Uniform Administrative Requirements for Grants and Cooperative Agreements to State and Local Governments).

(6) 34 CFR part 81 (General Education Provisions Act—Enforcement).

(7) 35 CFR part 82 (New Restrictions on Lobbying).

(8) 34 CFR part 85 (Governmentwide Debarment and Suspension (Nonprocurement) and Governmentwide Requirements for Drug-Free Workplace (Grants)).

(9) 34 CFR part 86 (Drug and Alcohol Abuse Prevention).

(10) 34 CFR part 97 (Protection of Human Subjects).

(11) 34 CFR part 99 (Family Educational Rights and Privacy).

(b) The regulations in this part 373.

(c) The regulations in 48 CFR part 31 (Contracts Cost Principles and Procedures).

(Authority: 29 U.S.C. 711(c))

§ 373.4 What definitions apply?

The following definitions apply to this part:

Act means the Rehabilitation Act of 1973, as amended.

(Authority: 29 U.S.C. 701 *et seq.*)

Early intervention means a service delivery or model demonstration program for adults with disabilities designed to begin the rehabilitation services as soon as possible after the onset or identification of actually or potentially disabling conditions. The populations served may include, but are not limited to, the following:

(a) Individuals with chronic and progressive diseases that may become more disabling, such as multiple sclerosis, progressive visual disabilities, or HIV.

(b) Individuals in the acute stages of injury or illness, including, but not limited to, diabetes, traumatic brain injury, stroke, burns, or amputation.

(Authority: 29 U.S.C. 711(c))

Employment outcome is defined in 34 CFR 361.5.

(Authority: 29 U.S.C. 711(c))

Individual with a disability is defined as follows:

(a) For an individual who will receive rehabilitation services under this part, an individual with a disability means an individual—

(1) Who has a physical or mental impairment which, for that individual, constitutes or results in a substantial impediment to employment; and

(2) Who can benefit in terms of an employment outcome from vocational rehabilitation services.

(b) For all other purposes of this part, an individual with a disability means an individual—

(1) Who has a physical or mental impairment that substantially limits one or more major life activities;

(2) Who has a record of such an impairment; or

(3) Who is regarded as having such an impairment.

(c) For purposes of paragraph (b) of this definition, projects that carry out services or activities pertaining to Title V of the Act must also meet the requirements for ''an individual with a disability'' in section 7(20)(c) through (e) of the Act, as applicable.

(Authority: 29 U.S.C 705(20)(A) and (B))

Individual with a significant disability means an individual—

(a) Who has a severe physical or mental impairment that seriously limits one or more functional capacities (such as mobility, communication, self-care, self-direction, interpersonal skills, work tolerance, or work skills) in terms of an employment outcome;

(b) Whose vocational rehabilitation can be expected to require multiple vocational rehabilitation services over an extended period of time; and

(c) Who has one or more physical or mental disabilities resulting from amputation, arthritis, autism, blindness, burn injury, cancer, cerebral palsy, cystic fibrosis, deafness, head injury, heart disease, hemiplegia, hemophilia, respiratory or pulmonary dysfunction, mental retardation, mental illness, multiple sclerosis, muscular dystrophy, musculo-skeletal disorders, neurological disorders (including stroke and epilepsy), paraplegia, quadriplegia and other spinal cord conditions, sickle-cell anemia, specific learning disabilities, end-stage renal disease, or another disability or combination of disabilities determined on the basis of an assessment for determining eligibility and vocational rehabilitation needs to cause comparable substantial functional limitation.

(Authority: 29 U.S.C. 705(21)(A))

Informed choice means the provision of activities whereby individuals with disabilities served by projects under this part have the opportunity to be active, full partners in the rehabilitation process, making meaningful and informed choices as follows:

(a) During assessments of eligibility and vocational rehabilitation needs.

(b) In the selection of employment outcomes, services needed to achieve the outcomes, entities providing these services, and the methods used to secure these services.

(Authority: 29 U.S.C. 711(c))

Rehabilitation services means services provided to an individual with a disability in preparing for, securing, retaining, or regaining an employment outcome that is consistent with the strengths, resources, priorities, concerns, abilities, capabilities, interests, and informed choice of the individual. Rehabilitation services for an individual with a disability may include—

(a) An assessment for determining eligibility and vocational rehabilitation needs by qualified personnel, including, if appropriate, an assessment by personnel skilled in rehabilitation technology;

(b) Counseling and guidance, including information and support services to assist an individual in exercising informed choice;

(c) Referral and other services to secure needed services from other agencies;

(d) Job-related services, including job search and placement assistance, job retention services, follow-up services, and follow-along services;

(e) Vocational and other training services, including the provision of personal and vocational adjustment services, books, tools, and other training materials;

(f) Diagnosis and treatment of physical and mental impairments;

(g) Maintenance for additional costs incurred while the individual is receiving services;

(h) Transportation;

(i) On-the-job or other related personal assistance services;

(j) Interpreter and reader services;

(k) Rehabilitation teaching services, and orientation and mobility services;

(l) Occupational licenses, tools, equipment, and initial stocks and supplies;

(m) Technical assistance and other consultation services to conduct market analysis, develop business plans, and otherwise provide resources to eligible individuals who are pursuing self-employment or telecommuting or establishing a small business operation as an employment outcome;

(n) Rehabilitation technology, including telecommunications, sensory, and other technological aids and devices;

(o) Transition services for individuals with disabilities that facilitate the achievement of employment outcomes;

(p) Supported employment services;

(q) Services to the family of an individual with a disability necessary to assist the individual to achieve an employment outcome;

(r) Post-employment services necessary to assist an individual with a disability to retain, regain, or advance in employment; and

(s) Expansion of employment opportunities for individuals with disabilities, which includes, but is not limited to—

(1) Self-employment, business ownership, and entreprenuership;

(2) Non-traditional jobs, professional employment, and work settings;

(3) Collaborating with employers, Economic Development Councils, and others in creating new jobs and career advancement options in local job markets through the use of job restructuring and other methods; and

(4) Other services as identified by the Secretary and published in the **Federal Register**.

(Authority: 29 U.S.C. 711(c) and 723(a))

Substantial impediment to employment means that a physical or mental impairment (in light of attendant medical, psychological, vocational, educational, and other related factors) hinders an individual from preparing for, entering into, engaging in, or retaining employment consistent with the individual's capacities and abilities.

(Authority: 29 U.S.C. 705(20)(A))

Youth or Young adults with disabilities means individuals with disabilities who are between the ages of 16 and 26 inclusive when entering the program.

(Authority: 29 U.S.C. 711(c) and 723(a))

§ 373.5 Who is eligible to receive services and to benefit from activities conducted by eligible entities?

(a)(1) For projects that provide rehabilitation services or activities to expand and improve the provision of rehabilitation services and other services authorized under Titles I, III, and VI of the Act, individuals are eligible who meet the definition in paragraph (a) of an ''individual with a disability'' as stated in § 373.4.

(2) For projects that provide independent living services or activities, individuals are eligible who meet the definition in paragraph (b) of an ''individual with a disability'' as stated in § 373.4.

(3) For projects that provide other services or activities that further the purposes of the Act, individuals are eligible who meet the definition in paragraph (b) of an ''individual with a disability'' as stated in § 373.4.

(b) By publishing a notice in the **Federal Register**, the Secretary may identify individuals determined to be eligible under one or more of the provisions in paragraph (a) of this section.

(Authority: 29 U.S.C. 711(c) and 723(a))

§ 373.6 What are the priorities and other factors and requirements for competitions?

(a)(1) In making an award, the Secretary may limit competitions to, or

otherwise give priority to, one or more of the priority projects listed in paragraph (b) of this section that are identified by the Secretary and published in a notice in the **Federal Register**.

(2) The Secretary also will identify in the notice the following:

(i) Specific required priority project activities authorized under section 303 of the Act that the applicant must conduct for the priority project to be approved for funding.

(ii) Any of the additional factors listed in paragraph (c) of this section that the Secretary may consider in making an award.

(b) Priority projects are as follows:

(1) Special projects of service delivery.

(2) Model demonstration.

(3) Technical assistance.

(4) Systems change.

(5) Special studies, research, or evaluations.

(6) Dissemination and utilization.

(7) Replication.

(8) Special projects and demonstration of service delivery for adults who are low-functioning and deaf or low-functioning and hard of hearing.

(9) Supported employment.

(10) Model transitional rehabilitation services for youth and young adults with disabilities.

(11) Expansion of employment opportunities for individuals with disabilities, as authorized in paragraph (s) of the definition of ''rehabilitation services'' as stated in § 373.4.

(12) Projects to promote meaningful access of individuals with disabilities to employment-related services under Title I of the Workforce Investment Act of 1998 and under other Federal laws.

(13) Innovative methods of promoting achievement of high-quality employment outcomes.

(14) The demonstration of the effectiveness of early intervention activities in improving employment outcomes.

(15) Projects to find alternative methods of providing affordable transportation services to individuals with disabilities.

(16) Other projects that will expand and improve the provision, extent, availability, scope, and quality of rehabilitation and other services under the Act or that further the purpose and policy of the Act as stated in section 2(b) and (c) of the Act.

(c) The Secretary may identify and publish in the **Federal Register** for specific projects listed in paragraph (b) of this section one or more of the following factors, including any specific elements defining any factor (*e.g.*, the Secretary may identify ages 16 through 21 to be the specific age range for a particular competition):

(1) Specific stages of the rehabilitation process.

(2) Unserved and underserved populations.

(3) Unserved and underserved geographical areas.

(4) Individuals with significant disabilities.

(5) Low-incidence disability populations.

(6) Individuals residing in federally designated Empowerment Zones and Enterprise Communities.

(7) Types of disabilities.

(8) Specific age ranges.

(9) Other specific populations and geographical areas.

(d) The Secretary may require that an applicant certify that the project does not include building upon or expanding activities that have previously been conducted or funded, for that applicant or in that service area.

(e) The Secretary may require that the project widely disseminate the methods of rehabilitation service delivery or model proven to be effective, so that they may be adapted, replicated, or purchased under fee-for-service arrangements by State vocational rehabilitation agencies and other disability organizations in the project's targeted service area or other locations.

(Authority: 29 U.S.C. 711(c) and 773(b)(4) and (5))

Subpart B—How Does the Secretary Make a Grant?

§ 373.10 What selection criteria does the Secretary use?

The Secretary publishes in the **Federal Register** or includes in the application package the selection criteria for each competition under this program. To evaluate the applications for new grants under this program, the Secretary may use the following:

(a) Selection criteria established under 34 CFR 75.209.

(b) Selection criteria in 34 CFR 75.210.

(c) Any combination of selection criteria from paragraphs (a) and (b) of this section.

(Authority: 29 U.S.C. 711(c) and 723(a))

§ 373.11 What other factors does the Secretary consider when making a grant?

(a) The Secretary funds only those applications submitted in response to competitions announced in the **Federal Register**.

(b) The Secretary may consider the past performance of the applicant in carrying out activities under previously awarded grants.

(c) The Secretary awards bonus points if identified and published in the **Federal Register** for specific competitions.

(Authority: 29 U.S.C. 711(c) and 723(a))

Subpart C—What Conditions Must Be Met By a Grantee?

§ 373.20 What are the matching requirements?

The Secretary may make grants to pay all or part of the cost of activities covered under this program. If the Secretary determines that the grantee is required to pay part of the costs, the amount of grantee participation is specified in the application notice, and the Secretary will not require grantee participation to be more than 10 percent of the total cost of the project.

(Authority: 29 U.S.C. 711(c) and 723(a))

§ 373.21 What are the reporting requirements?

(a) In addition to the program and fiscal reporting requirements in EDGAR that are applicable to projects funded under this program, the Secretary may require that recipients of grants under this part submit information determined by the Secretary to be necessary to measure project outcomes and performance, including any data needed to comply with the Government Performance and Results Act.

(b) Specific reporting requirements for competitions will be identified by the Secretary and published in the **Federal Register**.

(Authority: 29 U.S.C. 711(c) and 776)

§ 373.22 What are the limitations on indirect costs?

(a) Indirect cost reimbursement for grants under this program is limited to the recipient's actual indirect costs, as determined by its negotiated indirect cost rate agreement, or 10 percent of the total direct cost base, whichever amount is less.

(b) Indirect costs in excess of the 10 percent limit may be used to satisfy matching or cost-sharing requirements.

(c) The 10 percent limit does not apply to federally recognized Indian tribal governments and their tribal representatives.

(Authority: 29 U.S.C. 711(c))

§ 373.23 What additional requirements must be met?

(a) Each grantee must do the following:

(1) Ensure equal access and treatment for eligible project participants who are members of groups that have traditionally been underrepresented

based on race, color, national origin, gender, age, or disabilities.

(2) Encourage applications for employment from persons who are members of groups that have traditionally been underrepresented based on race, color, national origin, gender, age, or disabilities.

(3) Advise individuals with disabilities who are applicants for or recipients of the services, or the applicants' representatives or the individuals' representatives, of the availability and purposes of the Client Assistance Program, including information on means of seeking assistance under that program.

(4) Provide, through a careful appraisal and study, an assessment and evaluation of the project that indicates the significance or worth of processes, methodologies, and practices implemented by the project.

(b) A grantee may not make a subgrant under this part. However, a grantee may contract for supplies, equipment, and other services, in accordance with 34 CFR part 74, subpart C—Post-Award Requirements, Procurement Standards.

(Authority: 29 U.S.C. 711(c) and 717)

§ 373.24 What are the special requirements pertaining to the protection, use, and release of personal information?

(a) All personal information about individuals served by any project under this part, including lists of names, addresses, photographs, and records of evaluation, must be confidential.

(b) The use of information and records concerning individuals must be limited only to purposes directly connected with the project, including project reporting and evaluation activities. This information may not be disclosed, directly or indirectly, other than in the administration of the project unless the consent of the agency providing the information and the individual to whom the information applies, or his or her representative, has been obtained in writing. The Secretary or other Federal officials responsible for enforcing legal requirements have access to this information without written consent being obtained. The final products of the project may not reveal any personal identifying information without written consent of the individual or his or her representative.

(Authority: 29 U.S.C. 711(c))

[FR Doc. 00–31378 Filed 12–8–00; 8:45 am]

BILLING CODE 4000–01–P

Federal Register

Monday,
December 11, 2000

Part III

Equal Employment Opportunity Commission

29 CFR Part 1625
Waivers of Rights and Claims; Tender Back of Consideration; Final Rule

EQUAL EMPLOYMENT OPPORTUNITY COMMISSION

29 CFR Part 1625

RIN 3046–AA68

Waivers of Rights and Claims: Tender Back of Consideration

AGENCY: Equal Employment Opportunity Commission.

ACTION: Final rule.

SUMMARY: The Equal Employment Opportunity Commission (EEOC or Commission) is publishing this final regulation stating that, under the Older Workers Benefit Protection Act of 1990, employees cannot be required to tender back the consideration received under a waiver agreement before being permitted to challenge the waiver agreement in court, and addressing related issues. The regulation protects older workers' rights under the Older Workers Benefit Protection Act.

DATES: Effective January 10, 2001.

FOR FURTHER INFORMATION CONTACT: Carol R. Miaskoff, Assistant Legal Counsel, or Corbett L. Anderson, Attorney-Advisor, 202–663–4689 (voice), 202–663–7026 (TDD).

SUPPLEMENTARY INFORMATION:

I. Background

A. The Older Workers Benefit Protection Act of 1990

In Title II of the Older Workers Benefit Protection Act of 1990 (Title II or OWBPA), Congress added section 7(f) to the Age Discrimination in Employment Act of 1967, 29 U.S.C. 626(f) (ADEA), to set out requirements for ADEA waivers that would ensure that ''older workers [are] not coerced or manipulated into waiving their rights under the ADEA.'' [1] Congress decided not to require supervision of ADEA waivers by the Equal Employment Opportunity Commission (EEOC or Commission), but emphasized ''that the requirements of [T]itle II [are to] be strictly interpreted to protect those individuals covered by the Act.'' [2]

In the OWBPA, Congress proclaimed that ''[a]n individual may not waive any right or claim * * * unless the waiver is knowing and voluntary.'' 29 U.S.C. 626(f)(1). An ADEA waiver is valid only ''if certain threshold requirements [are met and the waiver is] otherwise shown to be knowing and voluntary.'' [3] The OWBPA states that the waiver agreement must be ''written in a manner calculated to be understood [by the employee], or by the average individual eligible to participate''; must specifically reference ADEA rights or claims; and must advise employees to consult an attorney before signing the agreement. ADEA waivers also must be in exchange for extra consideration, and must not waive rights or claims that arise after the agreement is executed.[4] Finally, the OWBPA directs employers to give employees specified periods of time to consider waivers and to revoke them. *Id.* section 626(f)(1)(A)–(G). When employers offer waivers in connection with an exit incentive or other group employment termination program, they must give employees certain information about the termination program itself, as well as lists of the job titles and ages of individuals eligible or selected for the program and the ages of those not eligible or selected but who were in the same job classification or organizational unit. *Id.* section 626(f)(1)(H). *See also* 29 CFR Part 1625.22.

In addition, an ADEA waiver is ''knowing and voluntary'' only if the employee accepts it ''in the absence of fraud, duress, coercion, or mistake of material fact.'' [5] According to the OWBPA legislative history, courts evaluating the validity of an ADEA waiver should analyze this aspect of the ''knowing and voluntary'' question under the ''totality of the circumstances approach.'' Congress rejected traditional contract principles as the basis for determining if an ADEA waiver is knowing and voluntary.[6]

Congress also provided that a court of competent jurisdiction would resolve ''any dispute'' that may arise over whether a waiver agreement was entered in compliance with the statutory requirements. 29 U.S.C. 626(f)(3). Congress intended that a valid OWBPA waiver would act as an affirmative defense.[7] The statute directs that the employer has the burden of proving that an ADEA waiver complies with the enumerated OWBPA requirements, assuming that the employer is the party asserting the validity of the waiver. *Id.*[8] Moreover, legislative history reveals that ''once that occurs, the employee may produce additional evidence to suggest that the waiver was not 'knowing and voluntary,''—*i.e.*, that the waiver is not valid due to one or more of the non-enumerated elements of the ''knowing and voluntary'' standard, such as fraud, duress, coercion or mistake of material fact.[9] In such a circumstance, the employer then must prove, with respect to the issues raised by the employee, that the waiver was both knowing and voluntary.[10]

B. The Negotiated Rule on Waivers of Rights and Claims Under the ADEA

In 1998, the EEOC published a final regulation on Title II of the ADEA, the product of a negotiated rulemaking under the procedures in the Negotiated Rulemaking Act, 5 U.S.C. 561 *et seq.* The final rule set forth the EEOC's interpretation of the standards in section 7(f) of the ADEA, covering the following subjects, among others: the wording of waiver agreements, waivers of future rights, consideration, time periods, informational requirements, waivers settling charges and lawsuits, the burden of proof, and the EEOC's enforcement powers. *See* 29 CFR 1625.22.

Some commenters on the negotiated rule had urged the Commission to address the question of whether employees can be required to tender back the consideration received under a waiver agreement before challenging the waiver agreement in court. However, about four months prior to publication

[1] 136 Cong. Rec. 27,061 (1990), *reprinted in* 1 Staff of Senate Comm. on Labor and Human Resources, 102d Cong., Legislative History of the Older Workers Benefit Protection Act (S. 1511 and Related Bills), at 23 (1991).

[2] S. Rep. No. 101–263, at 31 (1990, *reprinted in* 1 Staff of Senate Comm. on Labor and Human Resources, 102d Cong., Legislative History of the Older Workers Benefit Protection Act (S. 1511 and Related Bills), at 350 (1991) [hereinafter S. Rep. No. 101–263].

[3] *Id.* at 31–32.

[4] These requirements also apply to a waiver in settlement of an ADEA charge filed with the EEOC. 29 U.S.C. 626(f)(2).

[5] S. Rep. No. 101–263, *supra* note 2, at 31. *See also* 29 CFR 1625.22(a)(3) (''Other facts and circumstances may bear on the question of whether the waiver is knowing and voluntary, as, for example, if there is a material mistake, omission, or misstatement in the information furnished by the employer to an employee in connection with the waiver.''). *Accord Bennett* v. *Coors Brewing Co.*, 189 F.3d 1221, 1228–29 (10th Cir. 1999); *EEOC* v. *Johnson & Higgins*, 5 F. Supp. 2d 181, 186 (S.D.N.Y. 1998).

[6] S. Rep. No. 101–263, *supra* note 2, at 32. For the analysis of ''knowing and voluntary,'' the Senate Committee gave its approval to the ''totality of circumstances'' analysis used to uphold an ADEA waiver in *Cirillo* v. *Arco Chemical Co.*, 862 F.2d 448 (3d Cir. 1988), but disapproved of ''the approach adopted in *Lancaster* v. *Buerkle Buick Honda Co.*, 809 F.2d 539 (8th Cir.), *cert. denied*, 482 U.S. 928 (1987),'' which applied ordinary contract principles.

[7] S. Rep. No. 101–263, *supra* note 2, at 35 (''A waiver of rights or release of claims is generally available as an affirmative defense.'')

[8] *See also* 136 Cong. Rec. 27,062 (1990) (Final Statement of Floor Managers) *reprinted in* 1 Staff of Senate Comm. on Labor and Human Resources, 102d Cong., Legislative History of the Older Workers Benefit Protection Act (S. 1511 and Related Bills), at 26 (1991).

[9] S. Rep. No. 101–263, *supra* note 2, at 35. Congress did not intend to force employers to ''prove a negative' where no evidence of fraud, duress, or coercion exists.'' *Id.*

[10] *Id.*

of the final negotiated rule, the Supreme Court decided the issue of tender back in *Oubre* v. *Entergy Operations, Inc.*, 522 U.S. 422 (1998). The Supreme Court held that a release that does not comply with the OWBPA requirements cannot bar an employee's ADEA claims, even if the employee did not tender back the consideration. The Commission decided, in light of *Oubre*, to address tender back and related issues in a subsequent guidance rather than in the negotiated rule.[11] The legislative rule published today fulfills that goal.

C. The EEOC's Rulemaking Authority Under the ADEA

Congress granted the EEOC authority under the ADEA to issue legislative rules that it considers ''necessary or appropriate'' in enforcing the Act. 29 U.S.C. 628.[12] ADEA legislative regulations are properly used to resolve statutory ambiguities or omissions, through policies that are consistent with the purposes of the Act.[13] If the ADEA does not directly address a particular matter, the EEOC may adopt any rule that is ''permissible'' under the Act. *Chevron* v. *Natural Resources Defense Council*, 467 U.S. 837 (1984). A legislative rule is permissible if it is a reasonable exercise of an agency's rulemaking authority. *Id.* at 844, 845, 865, 866; *Sanchez* v. *Pacific Powder Co.*, 147 F.3d 1097, 1100 (9th Cir. 1998); *Doe* v. *Dekalb County Sch. Dist.*, 145 F.3d 1441, 1448 (11th Cir. 1998). A legislative rule is not permissible if it is ''arbitrary, capricious, or manifestly contrary to the statute.'' *Chevron*, 467 U.S. at 843; *Arnold* v. *United Parcel Serv., Inc.*, 136 F.3d 854, 864 n.8 (1st Cir. 1998). Legislative rules have the effect of law and are binding on the general public, subject to limited review by the courts. *United States* v. *Storer Broadcasting Co.*, 351 U.S. 192 (1956) (legislative rule has force and effect of law).

D. The Decision in Oubre v. Entergy Operations, Inc.

In *Oubre* v. *Entergy Operations, Inc.*, 522 U.S. 422 (1998), the Supreme Court addressed the question of whether the OWBPA's statutory waiver scheme permits an employer to rely on contract theories of ratification and tender back to defend an ADEA waiver that does not comply with the OWBPA. The waiver in *Oubre* did not comply with three of the OWBPA's threshold requirements,[14] but the employer argued that it nonetheless was enforceable based on contract principles of ratification and tender back. The employer maintained that Ms. Oubre ratified the defective waiver because she did not return the money paid by the employer after discovering the waiver's deficiencies. *Oubre*, 522 U.S. at 425.

Rejecting this argument, the Supreme Court held that Ms. Oubre's waiver could not be given effect because it did not comply with the OWBPA, notwithstanding contract theories of ratification and tender back. The Court reasoned that the validity of an ADEA waiver should be determined solely with reference to the statutory scheme, because ''[t]he OWBPA sets up its own regime for assessing the effect of ADEA waivers, separate and apart from contract law.'' *Oubre*, 522 U.S. at 427. The Court explained:

> Congress imposed specific duties on employers who seek releases of certain claims created by statute. Congress delineated these duties with precision and without qualification: An employee ''may not waive'' an ADEA claim unless the employer complies with the statute. Courts cannot with ease presume ratification of that which Congress forbids.

The Court also explained that reliance on these contract principles would ''frustrate [the OWBPA's] practical operation as well as its formal command.'' [15] Many discharged employees would lack the resources to return funds received for the waiver, as a condition of ADEA litigation. The Court expressed concern that ''[t]hese realities might tempt employers to risk noncompliance with the OWBPA's waiver provisions * * *. We ought not to open the door to an evasion of the statute by this device.'' [16]

Finally, the Court observed that, in the future, lower courts may need to inquire ''whether the employer has claims for restitution, recoupment, or setoff against the employee'' for return of the consideration paid in exchange for the invalid waiver. The Court expressly stated that it ''need not decide those issues here, however.'' [17] In his concurrence, Justice Breyer raised the possibility of employers seeking restitution after suit commenced.[18]

II. Review and Discussion of Public Comments

A. Introduction and General Comments

The Commission received 27 comments in response to this Notice of Proposed Rulemaking (NPRM or Rulemaking), which was published in the **Federal Register** on April 23, 1999. 64 FR 19952. Of these comments, 19 were from representatives of employers and eight were from representatives of employees or older persons. Before reviewing and discussing the public comments on specific sections of the NPRM, the Commission addresses some general comments received from representatives of employers.

First, employer representatives questioned the Commission's authority to promulgate this regulation, arguing that the EEOC cannot regulate the contents of an ADEA waiver agreement if the agreement was entered into in a ''knowing and voluntary'' fashion under the OWBPA. As explained in detail below, however, the Commission is regulating the content of waivers only to the extent necessary to fully effectuate the OWBPA's ''knowing and voluntary'' standard.

Employer commenters also asserted that the Commission does not have the authority to regulate covenants not to sue. These comments led the Commission to refine its reasoning related to covenants not to sue. For the reasons set forth below, the Commission has the authority to regulate covenants not to sue because they operate as waivers in the ADEA context. Thus, as a logical outgrowth of the proposed rule and the comments on it, the Commission has drafted the final rule to reflect a unified approach to waivers and covenants not to sue, as well as tender back and damages.

Furthermore, an employer representative contended that the proposed regulation would not be

[11] However, with regard to the administrative process, section (i)(3) of the negotiated rule provides that a waiver agreement cannot impose ''any condition precedent, any penalty, or any other limitation adversely affecting'' an individual's right to file a charge or complaint with the EEOC or assist the EEOC in an investigation. As noted in the preamble to the final negotiated rule, this provision forbids a requirement in a waiver agreement that an individual tender back the consideration before filing a charge or complaint of discrimination with the EEOC or assisting the EEOC in an investigation. 63 FR 30627 (1998).

[12] *See American Ass'n of Retired Persons* v. *EEOC*, 823 F.2d 600, 604 (D.C. Cir. 1987) (''It would be very difficult to find more permissive statutory language [than in 29 U.S.C. 628].'').

[13] *See Pauly* v. *BethEnergy Mines, Inc.*, 501 U.S. 680, 696 (1991) (''When Congress, through express delegation or the introduction of an interpretive gap in the statutory structure, has delegated policymaking authority to an administrative agency, the extent of judicial review of the agency's policy determinations is limited.'').

[14] In procuring Ms. Oubre's ADEA waiver, Entergy Operations, Inc., did not comply with OWBPA in at least three aspects: (1) it did not give her enough time to consider the waiver; (2) it did not give her seven days after she signed the waiver to change her mind; and (3) the text of the waiver did not specifically refer to ADEA claims. *Oubre*, 522 U.S. at 424–25 (majority opinion).

[15] *Oubre*, 522 U.S. at 427 (majority opinion).

[16] *Id.*

[17] *Id.* at 428.

[18] *Id.* at 433 (Breyer, J., and O'Connor, J., concurring).

entitled to judicial deference because it interprets the Supreme Court's decision in *Oubre* rather than the OWBPA itself. However, these rules do not solely interpret the decision in *Oubre*. The EEOC is construing the OWBPA through this regulation, and the regulation promulgated herein is fully supported by a reasoned interpretation of the requirements of the OWBPA. Obviously, the Commission is required to take the Supreme Court's decision in *Oubre* into account in promulgating the regulations.

Finally, several management representatives commented that this regulation may undermine the Commission's support of voluntary resolution of cases through mediation. Specifically, they contended that this regulation may discourage employers from participating in EEOC mediations because waivers entered into in conjunction with ADEA mediation settlements will be perceived as vulnerable to challenge. The Commission, however, is satisfied that this regulation will not weaken its mediation program.

According to a recent independent and comprehensive survey of employers and charging parties who have participated in the EEOC's National Mediation Program, the overwhelming majority of participants find it to be highly effective, express strong satisfaction with the process, and are willing to participate again if party to a discrimination charge.[19] These survey results reflect that, among other things, EEOC mediation is fully voluntary and is a process in which the basic interests of both parties are addressed. A mediation settlement is only achieved when the parties have addressed all of their interests and identified a mutually satisfactory solution, including agreement to any waiver provision. This is entirely distinct from the situation where an employer conditions severance, early retirement, or other benefits offered in connection with a layoff or reduction-in-force on the signing of a waiver.

B. Comments on Proposed 29 CFR 1625.23(a): Tender Back

Paragraph (a) of this rule, as proposed and published for comment in the **Federal Register**, stated:

An individual alleging that a waiver agreement was not knowing and voluntary under the ADEA is not required to tender back the consideration given for that agreement before filing either a lawsuit or a charge of discrimination with EEOC or any state or local fair employment practices agency. Retention of consideration does not foreclose a challenge to any waiver agreement; nor does the retention constitute the ratification of any waiver. A clause requiring tender back is invalid under the ADEA.

Comments on this provision were not numerous. One employer representative stated that the provision, while perhaps unnecessary in light of the Supreme Court's holding in *Oubre*, was mostly ''unobjectionable.'' A few employer representatives objected vigorously to aspects of the proposal, as discussed below. Employee representatives did not comment.

1. The ''No Tender Back'' Rule Applies to All Waiver Challenges

The basic rationale for paragraph (a) of this regulation is that the OWBPA forecloses the employer defenses of tender back and ratification[20] because these defenses would effectively result in enforcement of noncompliant OWBPA waivers despite Congress' admonition that ''[a]n individual may not waive'' an ADEA right or claim unless the waiver is knowing and voluntary.[21] Paragraph (a) of the proposed regulation stated that ''[r]etention of consideration does not foreclose a challenge to any waiver agreement; nor does the retention constitute the ratification of any waiver.'' Three management representatives asserted that the ''no tender back'' rule should apply only if the waiver obviously fails to comply with OWBPA's enumerated statutory requirements (for example, if the waiver does not refer to the ADEA, or it does not advise legal consultation). Under this approach, it would follow that tender back *could* be required if an individual challenged a waiver on the basis of fraud, duress, or other circumstances beyond the document itself.

The Commission considered these comments but concluded, for the following reasons, that the ''no tender back'' rule must apply regardless of a waiver's facial OWBPA compliance. First, the validity of a waiver agreement is not always apparent from its face, even with regard to the enumerated OWBPA requirements. For example, assessing the validity of a waiver in connection with an exit incentive or a group termination program subject to the OWBPA's informational requirements generally requires an examination of the unique facts of a particular workforce reduction or termination. If the commenters' suggested approach were adopted, the tender back requirement could operate to allow employers to enforce group waivers that did not, in fact, comply with the informational requirements. Such a result would undermine enforcement of one of the OWBPA's critical components.[22]

Second, the commenters' suggestion would open the door to enforcement of OWBPA waivers that did not comply with the statute because they were tainted by fraud or duress. The Commission does not agree with the view that the OWBPA omits these common law prohibitions and, therefore, that any such challenge remains subject to ratification and tender back, even in the aftermath of *Oubre*. To the contrary, Congress contemplated that the OWBPA's standard for ''knowing and voluntary'' would incorporate *both* the enumerated statutory requirements *and* the requirement that the waivers be adopted ''in the absence of fraud, duress, coercion, or mistake of material fact.''[23] If the ''no tender back'' rule is necessary to effectuate the OWBPA's enumerated requirements, then it also must be applicable to enforce the fundamental requirement that OWBPA waivers be free of fraud, duress, coercion, or mistake of material fact.[24]

[19] *See* Dr. E. Patrick McDermott, Dr. Ruth Obar & Dr. Anita Jose, *An Evaluation of the Equal Employment Opportunity Commission Mediation Program* (Sept. 20, 2000) http://www.eeoc.gov/mediate/report/.

[20] *Oubre*, 522 U.S. at 430–31 (Breyer, J., and O'Connor, J., concurring) (''As a conceptuall matter, a 'tender back' requirement would imply that the worker had ratified her promise by keeping her employer's payment.'').

[21] *Oubre*, 522 U.S. at 427 (majority opinion). *See also id.* at 430–31 (Breyer, J., and O'Connor, J., concurring).

[22] In enacting the OWBPA, Congress was especially concerned about protecting older employees included in group terminations. *See* S. Rep. No. 101–263, *supra* note 2, at 32 (''[E]mployees affected by these programs have little or no basis to suspect that action is being taken based on their individual characteristics. Indeed, the employer generally advises them that the termination is *not* a function of their individual status. Under these circumstances, the need for adequate information * * * before waivers are signed is especially acute.'').

[23] *Id.* at 31–32 (''The unsupervised waiver must be knowing and voluntary. At a minimum, the waiving party must have genuinely intended to release ADEA claims and must have understood that he was accomplishing this goal. The individual also must have acted in the absence of fraud, duress, coercion, or mistake of material fact.''). *See also id.* at 35.

[24] The Commission agrees with the conclusion reached on this point by the court in *Bennett* v. *Coors Brewing Co.*, 189 F.3d 1221, 1229 (10th Cir. 1999), in which the releases at issue complied with the express statutory requirements of the OWBPA, but the court nevertheless held that ''the appellants' failure to tender back their severance benefits * * * ha[d] no effect on their ability to challenge the waivers of their ADEA claims under the OWBPA'' because of fraud, duress or other reasons. *But see Reid* v. *IBM Corp.*, 95 Civ. 1755 (MBM), 1997 WL 357969 (S.D.N.Y. June 26, 1997) (holding that the principles of ratification and tender back would

2. Tender Back Clauses

One employer representative recommended that the Commission permit negotiation of tender back clauses as part of waiver agreements. The Commission does not adopt this recommendation, and the final rule retains the prohibition against tender back clauses.[25] Allowing a tender back clause would undermine the OWBPA, as interpreted in *Oubre*. The basic rationale for this regulation is that the OWBPA abrogates the common law doctrines of tender back and ratification because their operation opens the door to enforcement of noncompliant OWBPA waivers.[26] Prohibiting tender back by operation of law, but allowing it by operation of contract, would unacceptably undermine the statute and elevate form over substance.

One employer representative commented that the Commission's use of the word ''invalid'' in the NPRM as to tender back clauses ''leaves open the question of whether * * * the inclusion of such provisions might somehow invalidate the ADEA waiver itself.'' [27] This employer representative maintained that inclusion of a tender back clause should not invalidate a waiver that otherwise was ''knowing and voluntary'' under the OWBPA. The final regulation does not address the question of severability because the NPRM did not present the issue, and the record on it is very limited. The Commission believes, however, that contrary to the position advanced by the employer, there is a strong argument that inclusion of an invalid provision in an ADEA waiver agreement—such as a tender back clause or a damages provision—should invalidate the entire waiver. Under this point of view, inclusion of such provisions in a waiver would make the agreement misleading in a material sense and thus violate the OWBPA's requirement that waivers be calculated to be understandable by the individual or by the average individual eligible to participate.[28]

3. Tender Back and State or Local Fair Employment Practices Agencies

Two management commenters objected to the wording of paragraph (a) where it stated that if an individual alleges that a waiver is not knowing and voluntary, tender back is not required prior to ''filing either a lawsuit or a charge of discrimination with * * * any state or local fair employment practices agency.'' These commenters contended that the Commission lacks authority to specify the conditions required to file a complaint with state or local agencies. To clarify this regulation, the Commission incorporates the following language in the sentence referring to state and local agencies:

> * * * or any state or local fair employment agency acting as an EEOC referral agency for purposes filing the charge with EEOC.

4. Final Regulatory Language for Paragraph (a)

Accordingly, paragraph (a) of the final rule will state: [29]

> An individual alleging that a waiver agreement, covenant not to sue, or other equivalent arrangement was not knowing and voluntary under the ADEA is not required to tender back the consideration given for that agreement before filing either a lawsuit or a charge of discrimination with EEOC or any state or local fair employment practices agency acting as an EEOC referral agency for purposes of filing the charge with EEOC. Retention of consideration does not foreclose a challenge to any waiver agreement, covenant not to sue, or other equivalent arrangement; nor does the retention constitute the ratification of any waiver agreement, covenant not to sue, or other equivalent arrangement.

C. Comments on 29 CFR 1625.23(b): Covenants Not To Sue

Paragraph (b) of the proposed regulation, as published for comment in the **Federal Register**, stated:

> A covenant not to challenge a waiver agreement, or any other arrangement that imposes any condition precedent, any penalty, or any other limitation adversely affecting any individual's right to challenge a waiver agreement, is invalid under the ADEA, whether the covenant or other arrangement is part of the agreement or is contained in a separate document. A provision allowing an employer to recover costs, attorneys' fees, and/or damages for the breach of any covenant or other arrangement is not permitted.

1. Summary of Employee Comments

Employee representatives stated that the use of covenants not to sue clearly offends Congress' intent to allow individuals to test ADEA waivers in court. One employee representative maintained that the Commission needs to implement more powerful disincentives for using covenants not to sue than simply stating that they are invalid under the OWBPA. According to this commenter, an employer that uses a covenant not to sue should be subject to: A rebuttable presumption in related litigation that the waiver was not knowing and voluntary; an automatic finding of a willful ADEA violation; and a finding of retaliation if the employer seeks to recoup past benefits or abrogate future benefits. The Commission has considered these comments but believes that the final rule reflects the commenters' concerns without unduly altering the legislative balance crafted by Congress.

2. Summary of Employer Comments

A number of management representatives acknowledged that a covenant not to sue that is part of a waiver agreement is enforceable only if the overall waiver agreement is knowing and voluntary under the OWBPA. As a corollary to this proposition, several commenters agreed with the employer representative who stated that ''[i]f the employee successfully invalidates the release because it does not comply with OWBPA, an employer's breach of contract claim is worthless.''

Some representatives of employers asserted that the Commission does not have the authority to regulate covenants not to sue. Employers also contended that the OWBPA does not affect the ability of the employer and employee to enter into a covenant not to sue, under which the employer is entitled to damages and/or attorneys' fees if the employee goes to court and the covenant is upheld. Commenters on behalf of employers asserted that a contrary result would encourage litigation and discourage employers from offering attractive severance packages in exchange for waivers. According to these commenters, the chilling effect of the damages provisions commonly included in such covenants is necessary to retain the OWBPA's balance between employer and employee interests.

One employer representative argued against paragraph (b) of the proposed rule because, in the commenter's view, ''a prevailing defendant is already

---

apply where a waiver met the minimum requirements of the OWBPA even if not knowing and voluntary for some other reason, such as fraud or duress). For the reasons discussed herein, the Commission believes that *Reid*, which predates the Supreme Court's decision in *Oubre*, was decided incorrectly.

[25] However, the rule on tender back clauses has been removed from paragraph (a) and incorporated into paragraph (b).

[26] *See Oubre,* 522 U.S. at 427 (majority opinion).

[27] This commenter made the same observation regarding the Commission's use of the phrase ''not permitted'' in paragraph (b) of the NPRM as to covenants not to sue, and the discussion above also applies to covenant not to see. One employee representative argued however, that inclusion of a convenant not to sue should create a rebuttable presumption in related litigation that the waiver was not knowing and voluntary.

[28] 29 U.S.C. 626(f)(1)(A).

[29] Note that paragraph (a) of the final rule uses the phrase ''waiver agreement, covenant not to sue, or other equivalent arrangement'' where appropriate to reflect the Commission's unified approach to waivers and covenants not to sue. Section C of the Preamble discusses covenants not to sue.

entitled as a matter of right to receive full reimbursement for all of its taxable costs (*see* 28 U.S.C. 1920), and may also be awarded its counsel fees if * * * the employee's claim 'was frivolous, unreasonable or groundless.' *Christiansburg Garment Co.* v. *EEOC,* 434 U.S. 412 (1978).'' Other commenters made similar arguments. Finally, an employer representative contended that, even if the Commission ultimately concludes that the use of covenants not to sue is inconsistent with the OWBPA, the Commission should provide that only the covenant, rather than the entire waiver agreement, is unenforceable.

3. Discussion

The NPRM addressed the legality of covenants not to sue and stated that such covenants were invalid due to the chilling effect on valid ADEA claims of damages and/or attorneys' fees provisions as well as the language of the covenants themselves. Because the chilling effect of damages or attorneys' fees could give life to waiver agreements that violate the OWBPA, the final rule continues to prohibit the use of provisions allowing the recovery of damages and/or attorneys' fees simply because suit has been filed. Based on further analysis in light of the comments, however, the final rule recognizes that an ADEA promise not to sue, by itself, is the functional equivalent of a waiver and therefore subject to the OWBPA requirements and restrictions. Thus, a covenant not to sue that comports with the requirements of the OWBPA will provide the employer with a defense against the employee's ADEA claim of age discrimination, and will entitle the employer to a dismissal of the employee's suit after the covenant has been upheld. In addition, attorneys' fees and costs will continue to be available under established principles. The final rule prohibits additional damages and/or attorneys fees because they would violate the statute. The final rule adopts a unified standard for waivers and covenants not to sue (and any other equivalent arrangements), pursuant to the Commission's authority to enforce the OWBPA.

(a) *Attorneys' Fees and Damages*

(i) *Attorneys' Fees and Costs Will Continue to be Available to Employers Under Established Principles*

As noted above, a few management commenters contended that the prohibition against covenants not to sue in paragraph (b) of the NPRM was inconsistent with the established law which permits the award of attorneys' fees and costs to prevailing employers in certain circumstances. One commenter took the position that prevailing employers are entitled to attorneys' fees if the employee's claim was ''frivolous, unreasonable or groundless,'' and to costs as a matter of right.

The courts have held that attorneys' fees are available for ADEA defendants where the plaintiff litigated in ''bad faith.'' [30] The ''frivolousness'' standard suggested by one commenter is the Title VII standard and does not apply to the ADEA.[31] In any event, the Commission does not intend to displace the established principles governing attorneys' fees under the ADEA. An employer would be entitled to attorneys' fees if the employee's suit were brought in bad faith.

The Commission agrees with the commenters' point on the issue of costs and therefore has deleted references to costs from the final rule where appropriate. As with attorneys' fees, the Commission does not intend to disturb established law with respect to costs. However, employers may not recover costs beyond those available under established law in ADEA cases.

In order to clarify these matters, the Commission has added a sentence to paragraph (b) stating that the rule is ''not intended to preclude employers from recovering attorneys'' fees or costs specifically authorized under federal law.''

(ii) *The Chilling Effect Conflicts with the OWBPA*

The Commission remains concerned about the chilling effect that the potential for attorneys' fees (other than those currently available) and damages would have on good faith OWBPA challenges. Several commenters in fact agreed that the possibility of such remedies exerts a chilling effect on ADEA litigation, although employee and employer representatives disagreed about the propriety of that chilling effect. In the Commission's view, the financial risk of pursuing an ADEA claim in the face of such remedies would, as a practical matter, discourage individuals from pursuing even cases about which they were fairly optimistic. Because the chilling effect of these penalties could give life to waiver agreements that were not compliant with the OWBPA, and thereby undermine enforcement of the statute, the Commission's final rule forbids any provision that threatens to impose any condition precedent, penalty, or other limitation that would adversely affect an individual who exercises his or her right to challenge an agreement covered by the OWBPA.

The Commission's conclusion that the chilling effect of damages or attorneys' fees is at odds with the OWBPA is supported by the Supreme Court's reasoning in *Oubre.* The Supreme Court in *Oubre* recognized the effect that financial pressure may have on an individual's willingness to bring a case. In the context of tender back, the Court reasoned that many individuals will ''lack the means to tender [the] return'' of funds received in exchange for the waiver and, therefore, will refrain from bringing cases they otherwise might pursue.[32] Employers' perceptions that individuals will be deterred from seeking judicial assessment of ADEA waivers, in turn, may ''open the door to an evasion of the statute.'' [33] The same unacceptable consequences that led the Supreme Court to reject a tender back requirement in *Oubre* would result if employee litigants faced the prospect of damages and/or attorney fees for breach of covenants not to sue.[34]

The chilling effect of damages or attorneys' fees also disturbs the balance between litigation and voluntary resolution that Congress crafted in the OWBPA. Congress was concerned about protecting employee rights, particularly in the group termination context, as it allowed unsupervised ADEA waivers.[35] In the OWBPA, Congress allowed employers to offer OWBPA-compliant waivers without EEOC supervision, but at the same time vested in ''a court of competent jurisdiction'' the authority to resolve ''any dispute that may arise'' over the validity of the waiver.[36] Permitting employers to chill employees from testing unsupervised ADEA waivers, by threatening to impose damages or attorneys' fees, would

[30] *See Turlington* v. *Atlanta Gas Light Co.*, 135 F.3d 1428, 1437 (11th Cir.) (citing cases, and reasoning that because the ADEA borrows the attorneys' fee provision of the Fair Labor Standards Act, which speaks only in terms of attorneys' fees for plaintiffs, ''a district court may award attorneys' fees to a prevailing ADEA defendant only upon a finding that the plaintiff litigated in bad faith''), *cert denied*, 119 S. Ct. 405 (1998); *Cesaro* v. *Thompson Publishing Group*, 20 F. Supp. 2d 725, 726–27 (D.N.J. 1998) (same).

[31] *Cf. Christiansburg Garment Co.* v. *EEOC*, 434 U.S. 412, 421 (1978) (under Title VII a prevailing defendant can get attorneys' fees ''upon a finding that the plaintiff's action was frivolous, unreasonable, or without foundation, *even though not brought in subjective bad faith*'') (emphasis added).

[32] *Oubre*, 522 U.S. at 427 (majority opinion).

[33] *Id.*

[34] *Cf. Oubre*, 522 U.S. at 431 (Breyer, J., and O'Connor, J., concurring) (''Courts must avoid allowing a recovery that has the effect of substantially enforcing the contract that has been declared unenforceable, since to do so would defeat the policy that lead to the rule in the first place.'' (quoting d. Dobbs, Law of Remedies 982 (1973))).

[35] *See* S. Rep. No. 101–263, *supra* note 2, at 31–32.

[36] *See* 29 U.S.C. 626(f)(3). *See also supra* notes 7–9.

impede access to judicial review and thus undermine this legislative balance.

Representatives of employers stated that a final regulation prohibiting damages and attorneys' fees would send a signal to employees that they could bring ADEA challenges ''with impunity.'' In the Commission's view, the suggestion that such a regulation will result in a flood of litigation is not persuasive. The Commission notes that no facts have been offered in support of such a suggestion. Employees executing waivers, covenants, or equivalent arrangements will understand the consequence of the agreement—that their pursuit of ADEA discrimination claims in litigation will fail if they knowingly and voluntarily entered into their agreements. While the possibility of frivolous lawsuits always exists, the Commission believes that a knowing and voluntary process helps ensure that an employee who has signed a waiver will not view a later lawsuit as fruitful.

(iii) *The Chilling Effect of Damages Provisions Cannot Be Limited to Situations Where the Underlying Waiver Is Valid.*

Some employer representatives contended that damages provisions at least should be enforceable when they are included in waiver agreements that are found to be knowing and voluntary under the OWBPA. In this circumstance, they reasoned, OWBPA compliance would not be undermined if litigation were chilled. The Commission does not agree that the chilling effect can be limited so neatly.

These commenters assume that the validity of ADEA waivers is easily discernable from the face of the agreement. However, as discussed above with respect to tender back, compliance with the OWBPA may not be apparent from the face of the document if the statute's informational requirements are applicable, or if the individual alleges that the waiver is not knowing and voluntary on the basis of fraud, duress, coercion, or mistake of material fact. *See supra* at II.B. Additionally, as another management commenter acknowledged, even individuals who are fairly certain that an ADEA waiver is unenforceable may choose not to bring suit simply because they are unwilling to risk liability for damages or the employer's attorneys' fees.

Two management commenters asserted that the Commission's own administrative investigation of ADEA charges guarantees that the Commission will advise individuals of the validity of their OWBPA waivers before filing suit. The nature of the ADEA's enforcement mechanism, however, belies this reasoning. ADEA charging parties need not receive a ''right to sue'' letter before going to court. They ''need only wait 60 days after filing the EEOC charge. Thus, the ADEA plaintiff can sue in court even if the EEOC has not yet completed its investigation * * *.'' [37] Moreover, were the Commission to assign staff attorneys to assess the legal sufficiency of all waivers presented in ADEA charges, as one commenter suggested, the waivers would then be supervised by the EEOC. However, Congress rejected proposals that EEOC supervise waivers.[38] In any event, such administrative assessment would not be determinative because ADEA litigation in court is *de novo. Cf.* 29 U.S.C. 626(c)(1).

(b) *ADEA Covenants Not To Sue Are Equivalents of ADEA Waivers and Therefore Subject to EEOC Regulation.*

Absent imposition of attorneys' fees and/or damages for breach, ADEA covenants not to sue are the functional equivalent of waivers. The Commission interprets the OWBPA proscription that ''[a]n individual may not waive any right or claim unless the waiver is knowing and voluntary'' [39] to govern covenants not to sue just as it does waivers. The Commission finds support for its unified approach in traditional contract principles,[40] the decision in *Oubre* and in other case law,[41] and in discussion in the OWBPA legislative history.[42] Common law distinctions between waivers and covenants not to sue [43] are insufficient to exclude ADEA covenants from the OWBPA requirements. Reading the statute to include covenants not to sue best respects the OWBPA's ''practical operation as well as its formal command.'' [44] Accordingly, a covenant not to sue under the ADEA is subject to the OWBPA, as interpreted in this regulation, whether the covenant is included in a waiver agreement, is in a second document, or is standing alone. Under this analysis, an OWBPA-compliant covenant not to sue can be asserted as a defense to defeat an ADEA claim, and thus will entitle the employer to a dismissal of the employee's suit after the covenant has been upheld. (An accompanying provision for damages is not enforceable. *See supra* discussion at II.C.3.a)).

However, a point of caution is warranted with respect to such covenants. Although ADEA covenants not to sue (absent damages) operate as the functional equivalent of waivers, they carry a higher risk of violating the OWBPA by virtue of their wording. An employee could read ''covenant not to sue'' or ''promise not to sue'' as giving up not only the right to challenge a past employment consequence as an ADEA violation, but also the right to challenge in court the knowing and voluntary nature of his or her waiver agreement. The chance of misunderstanding is heightened if the covenant not to sue is added to an agreement that already includes an ADEA waiver clause. The covenant in such a case would have no legal effect separate from the waiver clause. Nonetheless, its language would appear to bar an individual's access to court.

Employers therefore must take precautions in drafting covenants not to sue so that employees understand that the covenants do not affect their right to test the knowing and voluntary nature of the agreements in court under the OWBPA. By investing ''court[s] of competent jurisdiction'' with the authority to resolve ''any dispute that may arise over * * * the validity of a waiver,'' [45] Congress manifested in the plain language of the statute its intention to permit an employee who signed an ADEA waiver, to sue his or her employer upon the belief that the waiver did not comply with the

[37] *Hodge* v. *New York College of Podiatric Medicine*, 157 F.3d 164, 168 (2d Cir. 1998) (citations omitted). *See* 29 U.S.C. 626(d).

[38] S. Rep. No. 101–263, *supra* note 2, at 31 (stating the OWBPA ''provides for the first time by statute that waivers not supervised by the EEOC may be valid and enforceable'').

[39] 29 U.S.C. 626(f)(1).

[40] *See* J.D. Calamari, The Law of Contracts § 21.11 (4th ed. 1998) (''[i]f the promise is one never to sue, it operates as a discharge just as does a release'') (citing 5A Corbin on Contracts § 1251 (1964)); 66 Am Jur. 2d *Release* § 2 (1973).

[41] *See Oubre*, 522 U.S. at 433 (Breyer, J., and O'Connor, J., concurring) (writing interchangeably about waivers and promises not to sue); *Klee* v. *Lehigh Valley Hosp.*, No. 97–4642, 1998 WL 995850, at *4 (E.D. Pa. Nov. 5, 1998) (treating covenant not to sue as falling under the OWBPA: ''We also note that the covenant not to sue in the severance agreement is valid because it comports with the requirements elucidated by the statute for a knowing and voluntary waiver of the right to sue under the ADEA.''), *aff'd on other grounds*, 203 F.3d 817 (3d Cir. 1999).

[42] *Cf.* H.R. Rep. No. 101–664, at 86 (1990), *reprinted in* 1 Staff of Senate Comm. on Labor and Human Resources, 102d Cong., Legislative History of the Older Workers Benefit Protection Act (S. 1511 and Related Bills), at 293 (1991) [hereinafter H.R. Rep. No. 101–664]; S. Rep. No. 101–263, *supra* note 2, at 60 (''Employees are typically offered a substantial cash bonus to retire early in exchange for signing a waiver or release agreeing not to sue the company later for age discrimination.'').

[43] ''The difference [between a release and a covenant not to sue] is primarily in the effect as to third parties * * *.'' 66 Am Jur. 2d *Release* § 2 (1973). ''A general release of one among several joint tortfeasors operates to release from liability all of them. In contrast, a covenant not to sue will only release the one to whom it is given.'' *Frey* v. *Independence Fire & Cas. Co.*, 698 P.2d 17, 21 (Okla. 1985).

[44] *Oubre*, 522 U.S. at 427 (majority opinion).

[45] 29 U.S.C. 626(f)(3).

OWBPA. Thus, any provision in a waiver agreement that would cause an employee to believe that he or she could not seek a judicial determination of the validity of the waiver misrepresents the rights and obligations of the parties to the agreement. Such a misrepresentation conflicts with the OWBPA requirement that a valid waiver agreement must be ''written in a manner calculated to be understood'' by the employee ''or by the average individual eligible to participate.'' 29 U.S.C. 626(f)(1)(A).

(c) *Discussion of Additional Management Recommendations.*

Management representatives also commented that the proposed regulation's reference to ''other arrangements'' could be read to prohibit an employer from enforcing covenants not to sue that were negotiated as part of noncompetition or trade secret clauses. The Commission did not intend its regulation to extend beyond the ADEA in this fashion. Accordingly, the Commission has revised the regulation to refer specifically to an *ADEA* waiver agreement, covenant not to sue, or other equivalent arrangement.

In addition, while the Commission takes no position on non-ADEA provisions such as non-disparagement and confidentiality clauses, it notes that settlement agreements sometimes contain such clauses along with liquidated damages provisions for breach. A reasonable employee must be able to determine that any liquidated damages provisions for breach of non-ADEA clauses have no effect on the employee's ability to bring an ADEA charge or lawsuit challenging the waiver.

4. *Final Regulatory Language for Paragraph (b)*

Accordingly, paragraph (b) of the final rule will state:

No ADEA waiver agreement, covenant not to sue, or other equivalent arrangement may impose any condition precedent, any penalty, or any other limitation adversely affecting any individual's right to challenge the agreement. This prohibition includes, but is not limited to, provisions requiring employees to tender back consideration received, and provisions allowing employers to recover attorneys' fees and/or damages because of the filing of an ADEA suit. This rule is not intended to preclude employers from recovering attorneys' fees or costs specifically authorized under federal law.

D. Comments on 29 CFR 1625.23(c): Restitution, Recoupment, or Setoff

Paragraph (c) of the proposed regulation stated that if an employee successfully challenged a waiver and prevailed on the merits of an ADEA claim, courts have the discretion to determine whether an employer is entitled to restitution, recoupment, or setoff (hereinafter, ''reduction'') against the employee's damages award. These amounts never can exceed the lesser of the consideration the employee received for signing the waiver agreement or the amount recovered by the employee.

The remainder of this proposed regulation included, among other provisions, ''[a] nonexhaustive list of the factors that may be relevant to determine whether, or in what amount, a reduction should be granted.''

1. Summary of Employee Comments

Employee representatives endorsed the position that only setoff or recoupment should be allowed, and only to the extent that the employee wins damages based on a finding of employment discrimination. These commenters contended that employees would be chilled from bringing meritorious waiver challenges and age discrimination cases by the possibility of being required to return a severance payment under any other circumstances. They contended that this chilling effect also would discourage individuals from pursuing injunctive relief in the absence of significant damages. Even if damages were awarded, however, employee representatives favored denying recoupment or setoff when the consideration for the release was paid by a party other than the employer. For example, they stated that employers should not be allowed to recoup their consideration when it had been paid by a *bona fide* employee pension or welfare benefit plan under ERISA in the form of enhanced benefits. One employee representative also asserted that a reduction should not be permitted if the employer had willfully violated the ADEA. Finally, this commenter urged the Commission to delete employers' financial condition as a factor for courts to consider in determining whether recoupment was appropriate.

2. Summary of Employer Comments

Commenters representing employers criticized the Commission's proposal that restitution, recoupment, or setoff be permitted only to the extent that the employee is ultimately awarded damages for employment discrimination. Employers emphasized that the Supreme Court in *Oubre* did not decide the question of restitution, recoupment, or setoff, and that Justice Breyer explored the possibility of restitution in his concurrence.

Employers contended that restitution should not be limited to the lesser of the consideration or the plaintiff's recovery. They reasoned that restitution in excess of the plaintiff's recovery is ''a reflection of the plaintiff's overcompensation for the satisfaction of potential claims,'' rather than a tender back penalty. Some employers expressed concern about the situation of the employer whose waiver is invalid but who prevails on the underlying age claim; under the Commission's proposed rule, this employer would not be entitled to restitution.

Employers also asserted that setoff should not be discretionary if damages are awarded, because existing law entitles them to a reduction of back pay awards by the amount of severance pay. Most employer representatives criticized the factors proposed by the Commission for courts to use when deciding whether to grant a reduction, or how much to grant. They contended that some of the equitable factors proposed by the Commission would result in ADEA plaintiffs receiving double recovery because the court already would have addressed the same considerations in awarding damages. Employers also criticized the Commission's proposal that courts could equitably apportion the amount paid for the waiver among the rights waived, to calculate the proper reduction in ADEA damages. Employers emphasized that they pay one amount to a departing employee in exchange for a waiver of all his or her rights under the pertinent laws, and in their view, this amount cannot be apportioned.

3. Discussion

The Commission has considered the comments submitted and, for the reasons set forth below, has not changed its position that restitution, recoupment, or setoff must be limited to the lesser of the amount of the award to the prevailing ADEA plaintiff, or the amount of consideration the employee received for the waiver. The Commission, however, has decided to delete from the final regulation the list of factors ''that may be relevant to determine whether, or in what amount, a reduction should be granted.'' [46]

The Commission's rule on restitution, recoupment, and setoff, is based on the same statutory interpretation as the rule prohibiting employers from obtaining damages or attorneys' fees for breach of a covenant not to sue or another agreement covered by the OWBPA. Restitution can be tantamount to tender back if it is awarded in the absence of plaintiff's damages or in excess of those

[46] 64 FR at 19957.

damages.[47] If the prospect of making tender back before litigation would deter those who lack funds from pursuing good faith cases, then the prospect of making the same payment at the conclusion of litigation also would have a chilling effect. To state the obvious, plaintiffs do not know before bringing a case whether, or to what extent, they will obtain damages.

Accordingly, if restitution were not limited in the way set out in paragraph (c), employees deciding whether to bring suit would confront the possibility of not winning damages (or winning negligible damages) but still being compelled to return their full severance pay.[48] For those individuals who have used the severance pay for living expenses and lack the means to return it now or in the future, the prospect of restitution would present a large financial risk that would discourage them from moving forward. Even though this potential financial cost of bringing suit would not impose the same immediate and certain obstacle as a tender-back requirement, it nonetheless could be significant, especially for those older workers with limited or declining earning potential. As a result, older workers could be deterred from bringing age discrimination claims even though their waivers, if so challenged, might not be knowing and voluntary under the OWBPA. The Commission cannot allow this result consistent with its mandate to enforce the OWBPA.[49]

This position is consistent with the Supreme Court's interpretation of the OWBPA in *Oubre.* The majority and Justice Breyer spoke of employer claims and requests for restitution, recoupment, or setoff against the former employee.[50] The Commission is not barring claims for restitution, recoupment, or setoff. The Court in *Oubre,* however, did not rule on the availability of restitution, recoupment, or setoff. Therefore, *Oubre* does not preclude all limits on the extent to which these remedies may be available. In the Commission's view, the limits contained in this regulation are appropriate because they will reinforce compliance with the OWBPA waiver provisions. Importantly, they also are consistent with the Court's reasoning in *Oubre* that common law contract principles cannot be allowed to interfere with enforcement of the statute.[51]

The Commission, however, has deleted the list of factors for deciding whether, and to what extent, to award restitution, recoupment, or setoff. These factors were not central to the Commission's interpretation of the statute. Additionally, many of the employer comments regarding the factors were persuasive. For example, the Commission agrees that it typically would be difficult to equitably apportion a waiver payment among all the different claims waived. The Commission also understands employers' concerns about the proposed factors addressing the nature and severity of the underlying employment discrimination. Finally, the Commission understands employee representatives' comments favoring the deletion of the factor addressing the employer's financial condition.

Because the Commission is deleting this list of factors, it would be inappropriate to add new factors as suggested by employee representatives. The Commission, therefore, cannot incorporate two employee representatives' recommendation to direct courts to consider whether a release payment was provided directly by the employer or by an ERISA pension fund. While the Commission agrees that this may be an important consideration,[52] the Commission believes its significance is properly resolved by the courts.

4. Final Regulatory Language for Paragraph (c)

Accordingly, the paragraph (c) of the final rule will state:

Restitution, Recoupment, or Setoff

(1) Where an employee successfully challenges a waiver agreement, covenant not to sue, or other equivalent arrangement, and prevails on the merits of an ADEA claim, courts have the discretion to determine whether an employer is entitled to restitution, recoupment or setoff (hereinafter, ''reduction'') against the employee's monetary award. A reduction never can exceed the amount recovered by the employee, or the consideration the employee received for signing the waiver agreement, covenant not to sue, or other equivalent arrangement, whichever is less.

(2) In a case involving more than one plaintiff, any reduction must be applied on a plaintiff-by-plaintiff basis. No individual's award can be reduced based on the consideration received by any other person.

E. Comments on 29 CFR 1625.23(d): Abrogation

Paragraph (d) of the proposed regulation stated that:

No employer may unilaterally abrogate its duties under a waiver agreement to any signatory, even if one or more of the signatories to the agreement or EEOC successfully challenges the validity of that agreement under the ADEA.

The Commission received several comments from representatives of employers about this provision. One commenter stated that this proposed rule could be interpreted as prohibiting abrogation in circumstances in which there has not been an *ADEA* challenge. By its terms, the proposed language only pertains to the ADEA, and therefore no change is warranted.

Another commenter stated that an employer and employee should be allowed to include as part of a waiver agreement a provision stating that if the ADEA waiver is defective under the OWBPA, the employer will correct the defect and the employee will be required to execute the corrected waiver rather than file suit in court. The Commission is not persuaded by this comment. Congress could not have intended, in commanding that employees ''may not waive'' an ADEA claim unless the waiver satisfies the OWBPA, to allow employees' OWBPA rights to be subject to a promise which itself does not comply with the OWBPA. Accordingly, a promise to correct a defective waiver has no effect on the

[47] As stated in note 3 of the NPRM, recoupment and setoff, by definition, serve to limit the defendant's recovery to no more than the amount of plaintiff's damages. Black's Law Dictionary 1275, 1372 (6th ed. 1990).

[48] These individuals would include those who contemplate seeking primarily injunctive relief, for example, reinstatement in their former position.

[49] *Cf.* H.R. Rep. No. 101–664, *supra* note 42 at 90–91 (stating that legislation on ADEA waivers could impose, among others, the requirement that, ''[i]f the waiver is set aside for any reason, any damages received through a discrimination action shall be *offset* by the consideration received for the waiver'') (emphasis supplied).

[50] *Oubre*, 522 U.S. at 428 (majority); *id.* at 433 (Breyer, J., and O'Connor, J., concurring).

[51] *See id.* at 427 (''The OWBPA sets up its own regime for assessing the effect of ADEA waivers, separate and apart from contract law.''). *Cf. supra* note 6, discussing legislative history showing that Congress rejected the use of contract law principles for analyzing OWBPA waivers.

The Commission is not persuaded that an employer who prevails on the merits of the ADEA discrimination claim, but who nonetheless used an invalid OWBPA waiver, should receive restitution of the amount paid for the waiver. The basic principle is that restitution generally is unavailable if the agreement is unenforceable on grounds of public policy, ''unless denial of restitution would cause disproportionate forfeiture.'' Restatement (Second) of Contracts § 197 (1981). As one employee representative observed, the denial of restitution would not cause a disproportionate forfeiture if the employer materially violated the OWBPA waiver provisions.

[52] *See Doyne* v. *Union Elec. Co.*, 953 F.2d 447, 451 (8th Cir. 1992) (''The magistrate judge held that Doyne's back and front pay awards should be reduced by the amount of pension benefits he has received and will receive * * *. We are persuaded by the arguments of Doyne and the Equal Employment Opportunity Commission, *amicus curiae*, that the pension payments are from a collateral source and should not have been deducted.'') *EEOC* v. *O'Grady*, 857 F.2d 383, 391 (7th Cir. 1988) (district court's refusal to offset pension benefits against a back pay award was not an abuse of discretion).

employee's ability to pursue an ADEA claim.

Another commenter argued for a rule stating that when an employer learns that a release is invalid under OWBPA, the employer may stop making payments due under the release, cure the defect, and offer the employee a new release in exchange for new consideration. According to this commenter, the employee in that situation would be free to sign the new release or pursue an ADEA claim. The Commission does not agree that an employer may cancel its obligation to the employee as soon as it learns that a waiver does not comply with the OWBPA.[53] The Commission agrees, however, that the employer in this circumstance may present the employee with a new ADEA waiver, independently valid under each of OWBPA's requirements, which the employee is free to accept or reject.

One commenter interpreted the language that no employer may ''unilaterally'' abrogate to mean that an employer may abrogate its duties with respect to an individual who has challenged the waiver as not knowing and voluntary, reasoning that the employee's action would make the abrogation bilateral. The Commission does not intend this interpretation. An employee does not abrogate a waiver agreement, covenant not to sue, or other equivalent arrangement by exercising the guaranteed OWBPA right to have the agreement's validity determined by a court.[54] As stated above, an OWBPA waiver gives the employer an affirmative defense, not a guarantee of freedom from litigation. To avoid any further misinterpretation, the Commission has removed the word ''unilaterally'' from the final rule.

The Commission has adopted the following final rule on abrogation in paragraph (d):

No employer may abrogate its duties to any signatory under a waiver agreement, covenant not to sue, or other equivalent arrangement, even if one or more of the signatories or the EEOC successfully challenges the validity of that agreement under the ADEA.

This rule applies to the Commission's administrative process as well as litigation.

[53] *See Butcher* v. *Gerber Prods. Co.*, 8 F. Supp. 2d 307, 315–17 (S.D.N.Y. 1998) (interpreting Justice Breyer's concurrence in *Oubre*, and deciding that an invalid release could not permit the employer to use ''self help'' by withholding severance benefits from an employee who filed an ADEA claim).

[54] The Commission thus does not agree with the *Butcher* court's suggestion that if a waiver is held valid, the employer is entitled to terminate severance benefits because the employee breached the release agreement by filign suit. *Id.* at 313.

Executive Order 12866, Regulatory Planning and Review

Pursuant to section 6(a)(3)(B) of Executive Order 12866, this final rule has been reviewed by the Office of Management and Budget. Under section 3(f)(1) of Executive Order 12866, EEOC has determined that the regulation is significant, but will not have an annual effect on the economy of $100 million or more or adversely affect in a material way the economy, a sector of the economy, productivity, competition, jobs, the environment, public health or safety, or State or local or tribal governments or communities. Therefore, a detailed cost-benefit assessment of the regulation is not required.

Paperwork Reduction Act

EEOC certifies that the rule does not require the collection of information by EEOC or any other agency of the United States Government. The rule does not require any employer or other person or entity to collect, report, or distribute any information.

Regulatory Flexibility Act

In the NPRM, the Commission certified that the proposed regulation will not have a significant economic impact on a substantial number of small entities. The Commission reached this conclusion because the regulation does not impose a burden that is not imposed by the OWBPA. One management representative commented that the Commission did not provide a factual basis for the certification, pursuant to 5 U.S.C. 605(b).

The Commission has reconsidered the issue of certification. It continues to believe that its initial analysis is correct. It also concludes that, even assuming that the regulation imposes additional burdens on small entities, it would not have a significant economic effect on a substantial number of small entities. Between 1995 and 1999, a total of 98 charges involving waivers under the ADEA were filed against ADEA-covered small entities (those with between 20 and 499 employees)[55] with the EEOC and with state and local fair employment practices agencies, combined. This results in an average of only about 20 charges per year against small entities. An ADEA lawsuit cannot be filed without first filing an ADEA charge with the EEOC.

According to statistics published by the Small Business Administration, Office of Advocacy, there are about 530,000 ADEA-covered small entities.[56] Thus, on average each year, there is only one ADEA charge filed against a small entity challenging a waiver for every 26,500 ADEA-covered small entities. No evidence has been presented to the Commission supporting the conclusion that there would be an increase in charges against small entities. Even if, after this regulation takes effect, there is a discernable percentage increase in ADEA charges involving waivers filed against small entities, the total number of such charges will remain insignificant because the current number of charges is so small. Based on the foregoing, the Commission concludes that the rule will not have a significant economic impact on a substantial number of small entities.

[55] The size standard used by the Small Business Administration varies by industry; however, the SBA uses the ''fewer than 500 employees'' cut off when making an across-the-board classification.

[56] The Commission used figures for the years 1992 through 1996, the most recent years for which statistics are available from the Small Business Administration. Although the number of small entities generally does not vary greatly from year to year, it rose slightly each year during that period, from 508,000 in 1992 to 552,000 in 1996. If that upward trend has continued, then the average number of small entities during the period of 1995 to 1999 would be somewhat higher.

List of Subjects in 29 CFR Part 1625

Advertising, Age, Employee benefit plans, Equal employment opportunity, Retirement.

Dated: December 5, 2000.

Ida L. Castro,

Chairwoman.

For the reasons set forth in the preamble, the Equal Employment Opportunity Commission amends 29 CFR part 1625 as follows:

PART 1625—AGE DISCRIMINATION IN EMPLOYMENT ACT

1. The authority citation for part 1625 continues to read as follows:

Authority: 81 Stat. 602; 29 U.S.C. 621; 5 U.S.C. 301; Secretary's Order No. 10–68; Secretary's Order No. 11–68; sec. 12, 29 U.S.C. 631; Pub. L. 99–592, 100 Stat. 3342; sec. 2, Reorg. Plan No. 1 of 1978, 43 FR 19807.

2. Section 1625.23 is added to Subpart B—Substantive Regulations, to read as follows:

§ 1625.23 Waivers of rights and claims: Tender back of consideration.

(a) An individual alleging that a waiver agreement, covenant not to sue, or other equivalent arrangement was not knowing and voluntary under the ADEA is not required to tender back the consideration given for that agreement before filing either a lawsuit or a charge of discrimination with EEOC or any state or local fair employment practices

agency acting as an EEOC referral agency for purposes of filing the charge with EEOC. Retention of consideration does not foreclose a challenge to any waiver agreement, covenant not to sue, or other equivalent arrangement; nor does the retention constitute the ratification of any waiver agreement, covenant not to sue, or other equivalent arrangement.

(b) No ADEA waiver agreement, covenant not to sue, or other equivalent arrangement may impose any condition precedent, any penalty, or any other limitation adversely affecting any individual's right to challenge the agreement. This prohibition includes, but is not limited to, provisions requiring employees to tender back consideration received, and provisions allowing employers to recover attorneys' fees and/or damages because of the filing of an ADEA suit. This rule is not intended to preclude employers from recovering attorneys' fees or costs specifically authorized under federal law.

(c) *Restitution, recoupment, or setoff.* (1) Where an employee successfully challenges a waiver agreement, covenant not to sue, or other equivalent arrangement, and prevails on the merits of an ADEA claim, courts have the discretion to determine whether an employer is entitled to restitution, recoupment or setoff (hereinafter, ''reduction'') against the employee's monetary award. A reduction never can exceed the amount recovered by the employee, or the consideration the employee received for signing the waiver agreement, covenant not to sue, or other equivalent arrangement, whichever is less.

(2) In a case involving more than one plaintiff, any reduction must be applied on a plaintiff-by-plaintiff basis. No individual's award can be reduced based on the consideration received by any other person.

(d) No employer may abrogate its duties to any signatory under a waiver agreement, covenant not to sue, or other equivalent arrangement, even if one or more of the signatories or the EEOC successfully challenges the validity of that agreement under the ADEA.

[FR Doc. 00–31367 Filed 12–8–00; 8:45 am]

BILLING CODE 6570–01–P

Federal Register

Monday,
December 11, 2000

Part IV

Department of Commerce

National Oceanic and Atmospheric Administration

15 CFR Part 902

50 CFR Parts 600 and 648

Magnuson-Stevens Fishery Conservation and Management Act Provisions; Fisheries of the Northeastern United States; Atlantic Herring Fishery; Atlantic Herring Fishery Management Plan; Final Rules

50 CFR Part 648

Fisheries of the Northeastern United States; Atlantic Herring Fisheries; 2000 Specifications; Adjustment; Closure; Final Rule

DEPARTMENT OF COMMERCE

National Oceanic and Atmospheric Administration

15 CFR Part 902

50 CFR Parts 600 and 648

[Docket No. 000105004-0260-02; I.D. 063099A]

RIN 0648-AI78

Magnuson-Stevens Fishery Conservation and Management Act Provisions; Fisheries of the Northeastern United States; Atlantic Herring Fishery; Atlantic Herring Fishery Management Plan

AGENCY: National Marine Fisheries Service (NMFS), National Oceanic and Atmospheric Administration (NOAA), Commerce.

ACTION: Final rule.

SUMMARY: NMFS issues this final rule to implement approved measures contained in the Atlantic Herring Fishery Management Plan (FMP). These regulations implement the following measures: A target total allowable catch (TAC) level for each of three management areas, one of which is divided into inshore and offshore sub-areas; a procedure for the development and revision of annual specifications; initial specifications for the 2000 fishing year; incidental harvest limits upon closure of a management area; a vessel monitoring system (VMS) requirement for certain vessels; vessel size limits; a framework adjustment process; permitting and reporting requirements; restrictions on transfers at sea; and other measures for administration and enforcement. The intended effect of this final rule is to manage the Atlantic herring (*Clupea harengus*) fishery pursuant to the Magnuson-Stevens Fishery Conservation and Management Act (Magnuson-Stevens Act) and the FMP and to prevent overfishing of the Atlantic herring resource. This final rule also withdraws approval of the Preliminary Management Plan (PMP) for the Atlantic Herring Fishery of the Northwestern Atlantic and removes existing regulations related to Atlantic herring upon the effective date of the final rule. Finally, NMFS informs the public of the approval by the Office of Management and Budget (OMB) of the collection-of-information requirements contained in this final rule and publishes the OMB control numbers for these collections.

DATES: This final rule is effective December 11, 2000, except for the amendments to the following sections:

1. Sections 15 CFR 902.1, 50 CFR 600.525, 648.4, 648.5, 648.6, 648.7, 648.9, 648.11, 648.12, 648.13, 648.14(a)(103), (bb)(1)-(6), (bb)(8) and (9), (bb)(11)-(14), (bb)(17) and (18), 648.203, 648.204, and 648.205(b)-(c), which will be effective January 10, 2001; and

2. Sections 50 CFR 648.14(bb)(15) and (16) and 648.205(a), which will be effective March 12, 2001.

ADDRESSES: Copies of the FMP, its Regulatory Impact Review (RIR), the Final Regulatory Flexibility Analysis (FRFA), and the Final Environmental Impact Statement (FEIS), as prepared by the New England Fishery Management Council (Council), are available from Paul J. Howard, Executive Director, New England Fishery Management Council, 50 Water Street, The Tannery - Mill 2, Newburyport, MA 01950.

Comments regarding the collection-of-information requirements contained in this final rule should be sent to Patricia A. Kurkul, Regional Administrator, NMFS, Northeast Regional Office, One Blackburn Drive, Gloucester, MA 01930, and to the Office of Information and Regulatory Affairs, Office of Management and Budget, Washington, DC 20503 (Attn: NOAA Desk Officer).

Send comments regarding any ambiguity or unnecessary complexity arising from the language used in this rule to Patricia Kurkul.

FOR FURTHER INFORMATION CONTACT: E. Martin Jaffe, Fishery Policy Analyst, 978-281-9272.

SUPPLEMENTARY INFORMATION: This final rule implements approved measures contained in the FMP, which was partially approved by NMFS on behalf of the Secretary of Commerce (Secretary) on October 27, 1999. All of the measures but four were approved. The disapproved measures and the reasons for their disapproval are described in the preamble to the proposed rule to implement the approved measures (65 FR 11956, March 7, 2000) and are not repeated here.

Details concerning the justification for and development of the FMP and the implementing regulations were also provided in the notice of availability (NOA) of the Atlantic Herring FMP (64 FR 40542, July 27, 1999) and in the preamble to the proposed rule (65 FR 11956, March 7, 2000) and are not repeated here.

Approved Measures

Annual Specifications

The FMP enacts a procedure for establishing Optimum Yield (OY) that is based on the allowable biological catch (ABC). The ABC will be determined by multiplying the estimate of current stock size by the target fishing mortality rate (F). OY cannot exceed ABC, adjusted by the Canadian Georges Bank (GB) and New Brunswick (NB) fixed gear catches, which cannot exceed 20,000 mt for the Canadian NB fixed gear harvest and 10,000 mt for the Canadian GB harvest. The FMP limits the amount of Canadian catch that will be considered when setting OY. OY also will not exceed the maximum sustainable yield (MSY), unless an OY that exceeds MSY in a specific year is consistent with a control rule that ensures the achievement of MSY and OY on a continuing basis. However, OY will not exceed MSY prior to the 2001 fishing year. Because of some uncertainty in the current stock size estimates, the Council recommended, for purposes of setting the initial ABC, that the current stock size be assumed to equal B_{MSY}(the biomass level that produces MSY), rather than basing it on actual estimates of current stock size, which exceed B_{MSY}. This precautionary approach will limit catches until the estimates can be improved. The resulting ABC and OY, however, are still more than twice the amount of current landings.

The FMP establishes four additional specifications: Total amount allocated to processing by foreign ships (JVPt), either in state waters (IWP) or in the exclusive economic zone (EEZ) (JVP); amount of the domestic annual processing (DAP) allocated for at-sea processing by domestic vessels that exceed the vessel size limits established in the FMP (USAP); total amount of herring that can be taken in U.S. waters and transferred to Canadian herring carriers for transshipment to Canada (BT) as authorized by the Sustainable Fisheries Act (SFA)(Pub. L. 104-297, section 105(e)); and total allowable level of foreign fishing (TALFF), if any, from that portion of OY that will not be harvested by domestic vessels. The Council and the Atlantic States Marine Fisheries Commission (Commission) will consult annually to determine the allocation of JVPt to IWP and JVP.

Initial Specifications

The FMP establishes initial specifications for the 2000 fishing year. (The FMP as submitted recommended specifications for the 1999 fishing year that would remain in effect for the 2000

fishing year, unless revised through the specification process.) Because the 1999 fishing year has passed (the fishing year coincides with the calendar year), the initial specifications for the 2000 fishing year are established at the levels specified in the FMP for the 1999 fishing year.

The approved specifications include an ABC of 300,000 mt and an OY of 224,000 mt. Because the domestic annual harvest (DAH) is equal to the OY, TALFF is specified at zero for the 2000 fishing year. Estimates of DAP are based on recent processing estimates and allow for possible errors in estimates of the bait market and increased development of processing capacity. Since no herring is allocated to USAP for the 2000 fishing year, at-sea processing by domestic vessels exceeding the proposed size limits cannot take place. Table 1 contains the initial specifications for the 2000 Atlantic herring fishery which are effective January 1, 2000, through December 31, 2000.

TABLE 1.—ANNUAL SPECIFICATIONS[1] (MT) FOR THE ATLANTIC HERRING FISHERY, JANUARY 1 THROUGH DECEMBER 31, 2000

Specification	Atlantic Herring
ABC	300,000
OY	224,000
DAH	224,000
DAP	180,000
USAP	0
BT	4,000
JVPt	
JVP–Management Area 2	10,000
JVP– Management Area 3	5,000
JVP–Subtotal	15,000
IWP	25,000
JVPt–Total	40,000
TALFF	0
Reserve	0

[1] See Table 2 for Area TACs for Fishing Year 2000.

Management Areas

The FMP establishes three management areas based on the existing areas established by the Commission's FMP and the former PMP. However, Management Area 1 is divided into inshore (Area 1A) and offshore (Area 1B) areas. The Council uses the management areas as the basis for recommending the distribution of the TAC to different spawning components and for the distribution of JVP allocations and may use the management areas as the basis for implementation of other management measures in the future.

Total Allowable Catch

The FMP established a target TAC for the 1999 fishing year that remains in effect for the 2000 fishing year, unless revised through the specification process. Because the 1999 fishing year has passed, the FMP establishes the target TAC for the 2000 fishing year at the level specified in the FMP for the 1999 fishing year. The TAC will be re-specified for each fishing year beyond 2000. The TAC for a given year is distributed to the management areas based on existing knowledge of fishing patterns, herring stock structure, and herring migration. For the 2000 fishing year, the percentage allocations for the various areas are: Area 1A - 20 percent; Area 1B - 11 percent; Area 2 - 22 percent; Area 3 - 22 percent; Area 2 TAC Reserve - 24 percent. (Note: Does not total 100 percent due to rounding. See Table 2 for resultant management area target TACs.) Each year, the Council's Herring Plan Development Team will examine available data and recommend a TAC and its distribution to the Council. The Council will then consult with the Commission before it recommends a TAC to NMFS. NMFS will review the Council's recommendations and set the TAC, publish the proposed TAC in the **Federal Register** for public comment, make a final determination, and publish the final TAC and responses to public comments in the **Federal Register**. All harvests of Atlantic herring, from both state and Federal waters, will be applied against the TAC.

The directed fishery for herring will be closed in a management area after the date on which 95 percent of the area TAC would be caught, as projected by NMFS. Closure of the directed fishery with 5 percent remaining for an area TAC will allow the incidental harvest of herring in other fisheries to continue, while minimizing the likelihood the area TAC would be exceeded. This percentage is based on estimates of the incidental harvest of herring in other fisheries. If the percentage allocated to the incidental harvest overestimates the amount caught (incidental harvests after a closure are less than 5 percent), the 5-percent remainder for a given area TAC may be reduced by NMFS during the annual specification process the following year. If the percentage allocated to the incidental harvest underestimates the amount caught (incidental harvests after a closure are more than 5 percent), the remainder for a given area TAC may be increased the following year through a framework adjustment. After an area is closed to directed fishing, vessels are allowed to possess, transfer, or land ≤ 2,000 lb (907.2 kg) of herring in or from the closed area. Vessels that harvest 2,000 lb (907.2 kg) of herring in an open area are allowed to transit the closed area, provided all gear is stowed.

The industry will be notified of the closure of the directed fishery for herring in a management area through notification published in the **Federal Register** and a variety of other methods, including news releases, and through state agencies.

Area TACs for Fishing Year 2000

Table 2 lists the area TACs for the 2000 fishing year.

TABLE 2.—AREA TACS FOR FISHING YEAR JANUARY 1, 2000, THROUGH DECEMBER 31, 2000

Management Area	TAC (mt)
Area 1A	45,000
Area 1B	25,000
Area 2	50,000
Area 3	50,000
TAC Reserve–Area 2	54,000
TAC Total	224,000

Transfers at Sea

There are no specific restrictions on transfers of herring at sea, unless a management area is closed to directed fishing for Atlantic herring (i.e., harvesting more than 2,000 lb (907.2 kg) of Atlantic herring per trip) and/or other restrictions in the regulations apply. When a management area is closed to directed fishing for Atlantic herring, transfers are limited to no more than 2,000 lb (907.2 kg) of herring per day, in or from, an area subject to the closure. A vessel may not transfer more than 2,000 lb (907.2 kg) of herring taken from a closed area, nor transfer or sell any herring taken from a closed area to a joint venture vessel.

U.S. vessels authorized pursuant to the SFA, section 105(e), may not transfer herring to Canadian herring carriers that transship U.S.-caught herring after the amount of herring transshipped equals the amount of the BT specification. Canadian herring carriers may not receive U.S.-caught herring after the amount transshipped equals the amount of the BT specification.

Vessel Size Limits

Domestic vessels ≥ 165 ft (50.3 m) in length overall (LOA), or > 750 gross registered tons (GRT)/(680.4 mt), or > 3,000 horsepower are not permitted to catch, take, or harvest herring in or from the EEZ. Domestic vessels > 165 ft (50.3 m) LOA or > 750 GRT (680.4 mt) are

allowed, however, to process or receive herring in the EEZ, but are limited to the allocated amount specified pursuant to the specification process for USAP, which is zero for the 2000 fishing year.

Roe Fishery

The harvest of Atlantic herring for roe is allowed, provided the carcasses are not discarded. The Council will monitor the development of a roe fishery and may, in the future, recommend a limit on the amount of herring that may be harvested for roe. Any restrictions or limitations on the amount of herring harvested for roe must be implemented through the amendment process or the framework adjustment process in accordance with 50 CFR 648.206.

Foreign Fishing Vessel Restrictions

Foreign fishing vessel permitting and reporting requirements are established by 50 CFR part 600, subpart F, which include regulations on harvesting by foreign fishing vessels and joint ventures and internal waters processing and support. The Council may recommend joint ventures and TALFF in all management areas, subject to an annual review. The Council may choose to determine joint venture specifications and TALFF by management area. If joint venture allocations and TALFF are specified by area, all herring supplied to the joint venture and/or TALFF must come from that management area.

Vessel Monitoring Systems

The FMP requires the installation and use of a VMS unit on vessels in the directed herring fishery that caught > 500 mt in the previous year, or vessels whose owner intends to harvest > 500 mt in the current year. A VMS helps facilitate the monitoring of area-specific TACs and assists with the enforcement of closures of management areas to directed fishing for Atlantic herring, as well as facilitating the enforcement of closures imposed under regulations implementing other FMPs. If a vessel owner does not declare the intention to harvest > 500 mt at the start of the year, and does not install a VMS unit on the vessel, the vessel may not harvest > 500 mt in that fishing year. The VMS unit must be installed no later than March 12, 2001 and/or prior to the beginning of the subsequent fishing year in order to land > 500 mt in that fishing year, unless otherwise specified by the Regional Administrator. Because in this application VMS is intended primarily to monitor areas fished as opposed to days-at-sea effort, a VMS unit must be operating any time an Atlantic herring vessel is underway, but does not have to be operating when a vessel is moored or maneuvering in a harbor. This minimizes communication costs to vessel operators and removes the necessity to provide power to a moored vessel with a VMS unit.

Permitting Requirements

All commercial vessels meeting certain eligibility criteria fishing for, possessing, or landing herring in or from the EEZ are required to obtain a Federal Atlantic herring permit. Domestic vessels ≥ 165 ft (50.3 m) LOA, or > than 750 GRT (680.4 mt), or > 3,000 horsepower are not eligible to be issued a permit to harvest or take herring. However, domestic vessels > 165 ft (50.3 m) LOA or > 750 GRT (680.4 mt), regardless of horsepower, are eligible to obtain a processing permit to process or receive herring in the EEZ, limited to the amount allocated for USAP pursuant to the specification process. Other than this restriction on vessel size, there are no restrictions or qualification criteria necessary for a domestic vessel to receive a permit. A vessel with a Federal Atlantic herring fishing permit must be marked in accordance with 50 CFR 648.8.

An Atlantic herring carrier vessel is required to obtain, in addition to a Federal Atlantic herring permit, a letter of authorization from the Regional Administrator that will allow such vessel to transport herring caught by another fishing vessel.

Operators of vessels issued an Atlantic herring fishing or processing permit are required to obtain an operator permit. There is no qualification or test for this permit. Dealers of Atlantic herring are required to obtain a dealer permit and to comply with reporting requirements.

This FMP requires Atlantic herring processors to obtain a processing permit and to comply with reporting requirements. Atlantic herring processors are defined as persons who receive or obtain unprocessed Atlantic herring for the purposes of rendering it suitable for human consumption, bait, commercial uses, industrial uses, or long-term storage. These requirements may result in a person needing both a dealer and a processor permit. For example, a person who purchases herring directly from a vessel and then sells it as bait will need both permits.

Reporting Requirements

The FMP extends the existing Vessel Trip Report (VTR) system to vessels with Atlantic herring permits. This requires the owner/operator to submit monthly reports on fishing effort, landings, and discards on forms supplied by the Regional Administrator. In addition, in order to improve real-time monitoring of the harvest, an Interactive Voice Response (IVR) system is required to be used. The FMP uses area-specific TACs to control fishing mortality. To be effective, harvests need to be closely monitored to ensure that the TAC is not exceeded. Since only vessel operators can identify where they harvest herring, the area-specific TACs cannot be monitored effectively through only the dealer reporting system. The VTR system relies on monthly reports on paper that are entered into a database. Accurate harvest statistics from this system are typically not available until 30 to 45 days after fish are landed. Given the high harvest rates in the herring fishery at certain times of the year, the delay in obtaining statistics makes it difficult to project landings accurately in a timely way. In order to improve the timely collection of harvest information, this rule requires that an owner/operator of a vessel required to be equipped with a VMS unit report its harvest (landings and discards, both of which are applied against the TACs), by area, on a weekly basis. These reports are called in (using a toll free number) to an IVR system. An owner/operator of a vessel with a VMS unit must call in a report for each week of the year, even if still at sea, including weeks it does not harvest herring. In addition, an owner/operator of any vessel issued a permit for Atlantic herring that is not required by § 648.205 to have a VMS unit on board, or any vessel that catches herring in or from the EEZ, but catches ≥ 2,000 lb (907.2 kg) of Atlantic herring on any trip in a week, must submit an Atlantic herring catch report via the IVR system by Tuesday of the following week, even if the herring has not yet been landed. This system improves the timeliness of information on harvests of herring, which will facilitate more accurate predictions about when the TAC will be attained.

Atlantic herring dealers are required to submit weekly dealer reports by mail. Although dealers are required to submit a weekly report to an IVR system for other Northeast Region quota-managed species, Atlantic herring dealers are not required to submit a weekly report to an IVR system unless the Regional Administrator determines that there is a need for such reports.

Atlantic herring processors are required to submit annually the Fishery Products Report, U.S. Processors, Annual Survey, (NOAA Form 88-13). This report, which collects information on the uses of herring, facilitates the management of the fishery to achieve OY.

Essential Fish Habitat

The Council submitted an omnibus essential fish habitat (EFH) amendment to address EFH provisions for several FMPs for Northeastern fisheries. The omnibus EFH amendment document also included the EFH components of the Atlantic Herring FMP, which was then still under development by the Council. Although the Atlantic herring EFH components were included in the omnibus EFH amendment, they were not considered during Secretarial review of the omnibus EFH amendment. The EFH information for Atlantic herring was incorporated by reference into the FMP when that FMP was submitted for Secretarial approval. The NOA for the FMP invited comment on the approvability of the herring EFH provisions in the Council's omnibus EFH amendment. Under the framework adjustment process for Atlantic herring, measures may be added or adjusted to describe, identify, and protect EFH and designate habitat areas of particular concern within EFH.

Annual Monitoring and Framework Adjustment Measures

The FMP will be monitored on an annual basis. The status of the resource and the fishery will be reviewed by the Council's Atlantic Herring Oversight Committee in consultation with the Commission's Atlantic Herring Section. Recommendations on specifications will be developed, as well as any suggested changes to the management measures. These will be forwarded by the Herring Oversight Committee to the Council, which will take appropriate action. Specifications will be recommended to NMFS, and changes to management measures may be adopted through a framework adjustment or FMP amendment, as appropriate. This process will begin by July of each year so that changes can be implemented by January 1 of the following fishing year. The Commission is expected to implement any corresponding changes in state waters.

The framework adjustment process adopted in the FMP is identical to that used in other Northeast Region fisheries. This process allows changes to be made to the regulations in a timely manner, without going through the plan amendment process, as appropriate. It provides a formal opportunity for public comment that substitutes for the customary public comment period provided by publishing a proposed rule. If changes to the management measures were contemplated in the FMP and if sufficient opportunity for public comment on the framework action exists, NMFS may bypass the proposed rule stage and publish a final rule in the **Federal Register**. The management measures that may be implemented and adjusted through the framework process include: (1) Management area boundaries; (2) size, timing, or location of spawning area closures; (3) closed areas other than spawning closures; (4) restrictions in the amount of fishing time; (5) a days-at-sea effort control system; (6) adjustments to specifications; (7) adjustments to the Canadian catch deducted when determining specifications; (8) distribution of the TAC; (9) gear restrictions (such as mesh size) or requirements (such as bycatch-reduction devices); (10) vessel size or horsepower restrictions; (11) closed seasons; (12) minimum fish size; (13) trip limits; (14) seasonal, area, or industry sector quotas; (15) measures to describe EFH, fishing gear management measures to protect EFH, and designation of habitat areas of particular concern within EFH; (16) measures to facilitate aquaculture, such as minimum fish sizes, gear restrictions, minimum mesh sizes, possession limits, tagging requirements, monitoring requirements, reporting requirements, permit restrictions, area closures, establishment of special management areas or zones, and any other measures included in the FMP; (17) changes to the overfishing definition; (18) vessel monitoring system requirements; (19) limits or restrictions on the harvest of herring for specific uses; (20) quota monitoring tools, such as vessel, operator, or dealer reporting requirements; (21) permit and vessel upgrading restrictions; (22) implementation of measures to reduce gear conflicts, such as mandatory monitoring of a radio channel by fishing vessels, gear location reporting by fixed gear fishermen, mandatory plotting of gear by mobile fishermen, standards of operation when conflict occurs, fixed gear marking or setting practices; gear restrictions for certain areas, vessel monitoring systems, restrictions on the maximum number of fishing vessels, and special permitting conditions; (23) limited entry or controlled access system; (24) specification of the amount of herring to be used for roe; and (25) any other measure currently included in the FMP.

Clarification of Initial "Fishing-up" Period

The Council, in its discussion of specifications for the Herring FMP, referred to an initial "fishing-up" period in which OY would not exceed MSY. A complete discussion is contained in section 3.2 of Volume I of the FMP. NMFS interprets the initial "fishing-up" period to mean the 2000 fishing year.

Preliminary Management Plan for the Atlantic Herring Fishery of the Northwestern Atlantic

On July 24, 1995 (60 FR 37848), NMFS announced approval of the PMP to regulate foreign joint venture activities for Atlantic herring in the EEZ. The PMP, which set the initial specification for Atlantic herring, provided joint venture opportunities in the EEZ by allocating a portion of the allowable biological catch for joint venture processing. The PMP also established permit conditions and restrictions for foreign vessels that participate in joint ventures. Because the FMP addresses issues related to Atlantic herring foreign joint venture activities, NMFS withdraws approval of the PMP and removes existing regulations related to Atlantic herring (50 CFR 600.525) effective January 10, 2001.

Comments and Responses

Twelve sets of written comments on the FMP were received during the comment period date established by the NOA, which ended September 27, 1999. Those comments were considered by NMFS before it partially approved the FMP on October 27, 1999, and, while not specifically repeated here, those comments are characterized below.

NMFS also received 14 sets of written comments on the proposed rule, some of which included comments on the FMP, during the comment period specified in the proposed rule, which ended on April 21, 2000. Because the comment period for the proposed rule was distinct from, and followed, the comment period for the FMP, comments received during the proposed rule comment period were not considered in NMFS' determination to approve the FMP. However, the comments addressing the proposed rule itself were considered in approval and implementation of the final rule effecting the FMP and its management measures and are responded to here. Those comments specifically addressing the FMP submitted after September 27, 1999, are not responded to here, since the comment period on the FMP had closed prior to their submission.

Comment 1: A commenter expressed concern that the FMP prohibits TALFF even though the FMP acknowledges Atlantic herring is not fully harvested by the available domestic harvesting capacity. The commenter further stated that the provision on TALFF, as currently written, is not consistent with section 303(a)(4)(B) of the Magnuson-

Stevens Act and that the FMP should be revised to provide for an annual specification of TALFF even if, in any given year, it is determined that the amount should be zero.

Response: NMFS concurs and disapproved the prohibition on TALFF. Section 303(a)(4)(B) of the Magnuson-Stevens Act provides that any fishery management plan that is prepared by any Council, or by the Secretary, with respect to any fishery, shall assess and specify the portion of OY which, on an annual basis, will not be harvested by fis hing vessels of the United States and can be made available for foreign fishing.

Comment 2: A commenter reiterated EFH issues raised previously pertaining to the Northeast Omnibus EFH Amendment. The commenter also provided extensive comments on technical aspects of the Omnibus Amendment's discussion of potential impacts to EFH from oil, gas, and mineral extraction, and the recommended conservation and enhancement measures dealing with these activities.

Response: The Northeast Omnibus EFH Amendment included the EFH components of the Atlantic Herring FMP, which was then still under development by the Council. When NMFS announced approval of the EFH amendments to several fishery management plans (64 FR 19503, April 21, 1999) it stated that the EFH information for Atlantic herring would be incorporated by reference into the Atlantic Herring FMP when that FMP was submitted for Secretarial approval. NMFS responded to the commenter's comments submitted on the Northeast Omnibus EFH Amendment at that time.

Comment 3: A commenter expressed concern about the level of effort in Management Area 1A and disagreed with NMFS' concerns about the following: Discrepancies in vessel size between the Atlantic mackerel and Atlantic herring fisheries (which the commenter asked to have clarified); the lack of a real-time mechanism to monitor Canadian catch (tied to the adjustment of the TAC for Management Area 1A); and the lack of sufficient benefits from adjusting the TAC in Management Area 1A after October 1 because the fishing year ends December 31. The commenter also stated that a real-time monitoring system for the Canadian fishery does exist; that adjusting the TAC after October 1 could have substantial benefits to the eastern Maine fixed gear fishery; that date-certain spawning closures are problematic and do not protect spawning herring; that the overall strategy for protection of spawning herring is inconsistent between Federal and state waters; and that NMFS and the Council need to address the impacts of other fisheries on spawning herring, whereby vessels from other fisheries are not constrained from fishing in the spawning closures.

Response: Regarding the commenter's concern about the level of effort in Management Area 1A, the management measures are intended to reduce herring landings from this area. The FMP effects TACs, assigned by management areas, to help prevent overfishing of the resource, and Management Area 1A in particular.

NMFS approved the vessel size restrictions. Regarding the commenter's request to clarify differences in domestic vessel size restrictions between the Atlantic herring and Atlantic mackerel fisheries, the FMP states that domestic vessels ≥ 165 ft (50.3 m) in length, or > 750 GRT, or 3,000 horsepower are not permitted to catch, take, or harvest herring in or from the EEZ. Amendment 8 to the Atlantic Mackerel, Squid and Butterfish Fishery Management Plan, however, provides that domestic vessels > 165 ft (50.3 m) in length and 750 GRT, or > 3,000 horsepower are not permitted to catch, take, or harvest mackerel in or from the EEZ.

Further, regarding vessel restrictions for processing, the FMP states that domestic vessels > 165 ft (50.3 m) in length, or > 750 GRT, are allowed to process or receive herring in the EEZ, but are limited to the allocated amount specified pursuant to the specification process for USAP. Amendment 8 to the Atlantic Mackerel, Squid and Butterfish Fishery Management Plan, however, provides no size restrictions for processing vessels.

The differences between the mackerel and herring size specifications do not result in any practical differential impact on vessels currently subject to these specifications. Nevertheless, NMFS will continue to work with the New England and Mid-Atlantic Councils (Councils) and the Commission to resolve these minor inconsistencies in order to facilitate FMP administration.

Regarding NMFS' concern that there is no real-time mechanism to monitor Canadian catch, even if Canadian data could be obtained, there is no way to ensure that it would be provided in future years. Therefore, NMFS disapproved adjustment of the TAC for Management Area 1A if the NB, Canada, fixed gear fishery would not harvest 20,000 mt of Atlantic herring by October 1.

NMFS disapproved the spawning closures measure.

Comment 4: The Commission commented in support of the FMP's full implementation and acknowledged its close coordination with the Council during the development of the FMP.

Response: The Commission coordinated development of its Amendment 1 to its Interstate Fishery Management Plan for Atlantic Sea Herring simultaneously with the Council's development of the FMP. In its attempt to maintain consistency with the Federal FMP, the Commission adopted the Council's proposed measures, where feasible, in its own plan, which was effective in February 1999. Disapproval by NMFS of several measures of concern in the Federal FMP has resulted in inconsistencies between the Commission and Federal plans. NMFS is working with the Commission and Councils to resolve any inconsistencies as they cooperatively develop future management measures.

Comment 5: A commenter stated that the FMP fails to prevent overfishing, minimize bycatch, and protect EFH. With regard to EFH, the commenter said that the Omnibus EFH Amendment incorrectly concluded that mid-water trawls have minimal effects on EFH; the Omnibus Amendment and the FMP failed to minimize fishing gear impacts on EFH; and the FMP fails to protect herring egg beds throughout the range of the stock. The commenter also stated that the Environmental Impact Statement for the FMP fails to discuss adequately the direct, indirect and cumulative environmental impacts of the proposed action; and that NMFS failed to undertake an Endangered Species Act (ESA) Section 7 formal consultation to determine the proposed action's potential to jeopardize threatened or endangered species.

Response: The Northeast Fisheries Science Center (NEFSC) reviewed the overfishing definition for Atlantic herring for compliance with guidelines provided in 50 CFR part 600, including consideration of whether the overfishing definition has sufficient scientific merit, is likely to result in effective action to protect the stock from closely approaching or reaching an overfished status, provides a basis for the objective measurement of the status of the stock against the overfishing definition, and is operationally feasible. Based on its review, the NEFSC certified that the overfishing definition complies with 50 CFR part 600 guidelines. The NEFSC further stated that the current estimates of biological reference points for this stock complex are based on the best available scientific information but

added that the Herring Plan Development Team (PDT), Stock Assessment Review Committee (SARC)-Pelagic Working Group, and the Commission's Herring Section recognize that further work and analyses are necessary for the stock complex and its components, and revisions will probably be required. These committees will continue to work on improving estimates of Bmsy, Fmsy (the fishing mortality rate consistent with the production of MSY), and MSY for Atlantic herring and may recommend changes in the future. The NEFSC will continue to monitor abundance, recruitment, fishing mortality and other information for the Atlantic herring stock complex and fishery and will recommend adjustments, if and when necessary.

The information available on the extent of bycatch in the herring fishery is summarized in sec. E.6.4.2.6. of the FMP and is further addressed throughout the FMP. This information, while not representative of the entire fishery in all areas and seasons, indicates that the traditional purse seine and mid-water trawl herring fisheries are relatively ''clean'' fisheries, with limited bycatch of other species.

There is some concern over possible marine mammal interactions with the herring mid-water trawl fishery, based on experience with other mid-water trawl fisheries. For this reason, NOAA listed the herring mid-water trawl fishery as a Category II fishery (defined at § 229.2 (60 FR 45086, August 30, 1995)). This will facilitate the use of marine mammal observers to determine the extent of any interactions. Further, restrictions on the size of vessels in the herring fishery may reduce the likelihood of bycatch of marine mammals. Large pelagic trawlers in the mackerel fishery are known to have taken marine mammals. The prohibition on the catching of herring by large domestic vessels may prevent a possible recurrence of this problem.

Management of the Atlantic herring fishery relies on accurate estimates of catches, catch rates, and bycatch. The FMP contains a measure that provides NMFS (and, cooperatively, the states) with the ability to place observers on board vessels to collect this information if necessary.

With regard to EFH issues, NMFS disagrees that the omnibus amendment incorrectly concluded that mid-water trawls have minimal effects on EFH. The 1998 Auster and Langton report referenced in the Omnibus Amendment provided a literature review of all available scientific information pertaining to gear impacts on habitat. No reference was made to mid-water trawl gear. Pursuant to 50 CFR 648.2, a mid-water trawl is defined as trawl gear designed to fish for, or that is capable of fishing for, or that is being used to fish for pelagic species, no portion of which is designed to be or is operated in contact with the bottom at any time. Based upon this definition and the lack of information documenting adverse impacts to bottom habitat from mid-water trawls, the Council correctly concluded that mid-water trawls do not significantly impact the sea floor or other EFH.

The Councils approached the evaluation of impacts from fishing gears methodically. They identified the major gears used in the region based on landings, described the major gears, identified that otter trawls and scallop dredges were the most likely to have adverse impacts on habitat, appended a summary of the literature on fishing gear impacts to habitat, and described other impacts from fishing activities such as the impacts of fishing-related marine debris and lost gear, impacts of aquaculture, and impacts of at-sea fish processing. The Councils also evaluated fisheries management measures currently in place and assessed their impact on EFH. Finally, the Councils identified a number of areas that require further research in order to provide a better basis for determining fishing gear impacts, such as the spatial distribution and extent of fishing effort for gear types; the effects of specific gear types along a gradient of effort on specific habitat types; and recovery rates of various habitat types following fishing activity. Although the commenter may disagree with the manner in which the information was presented, NMFS concludes that the Councils satisfied the requirements of the Magnuson-Stevens Act and the EFH requirements (50 CFR 600.815(a)(3)) regarding the assessment of fishing gear impacts.

The Council can use the framework adjustment process to address future identified impacts to herring EFH. Based upon management measures in place in other fishery management plans, as well as those within the Herring FMP as explained in the Northeast Omnibus Amendment, the Council has satisfied its requirement under 50 CFR 600.815(a)(3)(iii) to minimize, to the extent practicable, adverse effects on EFH.

Environmental impacts of this action are discussed in section E.7.0 of the FMP. The action is not expected to have a negative impact on the biological components of the herring fishery and is expected to have a net positive impact on the economic and social components of the herring fishery. Spawning stock biomass is projected to continue to increase at the same time that landings of herring could double. In the long-term, the establishment of TACs and effort controls are expected to result in a sustainable herring fishery. The social impacts of the action are not expected to be large in scale, long-term, or far-reaching. Fishermen in the Gulf of Maine (GOM) may be the most affected, primarily by forcing a redistribution of fishing effort from the inshore area. Some fishermen in other fisheries will have the opportunity to enter the herring fishery, which may alleviate problems caused by increasing restrictions in those fisheries.

NMFS completed a biological opinion (BO), pursuant to section 7 of the ESA, on the FMP on September 17, 1999. The BO concluded that while competition with the herring fishery may affect the availability of sufficient prey for endangered whales, the complexity of ecosystem interactions and the logistical difficulties of conducting necessary sampling have hindered conclusive demonstration of the existence of competition. This opinion further concluded that the proposed Federal herring fishery is not likely to jeopardize the continued existence of threatened or endangered species or designated critical habitat. The BO also includes an Incidental Take Statement that provides the fishery with an exemption from the take prohibitions established in section 9 of the ESA.

Comment 6: A commenter expressed concern that a serious decline in the herring stock in the GOM is due to mid-water trawling and suggested closing areas in the GOM to mid-water gear.

Response: While NMFS acknowledges some concern for the inshore portion of the stock in the GOM, the stocks offshore are robust. There is no credible evidence that any decline in the herring stock in the inshore GOM is due to any particular type of gear. The FMP limits TACs in each of the established herring management areas. Attainment of the TAC, therefore, would close a management area to directed herring fishing by any gear type. The measures do not, however, include the establishment of closed areas to address fishing mortality or other concerns.

Comment 7: A commenter supported the FMP as submitted, with the following exceptions: That the spawning area closures scheme is seriously flawed and should be rejected; JVP should be disapproved; and the word ''shoreside'' should be added to one of the FMP objectives, to read, ''To maximize domestic shoreside use and

encourage value-added product utilization.''

In requesting that the Secretary reject spawning area closures, the commenter stated that the date-certain approach proposed in the FMP will eliminate fishing opportunities. The commenter added that it will also be unsuccessful in reducing spawning fish mortality if herring are not spawning during the dates that the areas are closed. The commenter further added that spawning closures should also apply to mobile, bottom-tending vessels in addition to purse seiners and mid-water trawlers. The commenter also opposed the 2,000-lb (907.2-kg) incidental catch allowance.

In requesting disapproval of JVP, the commenter argued that the FMP seriously underestimates the amount of DAP that exists to freeze, or otherwise process, herring. The commenter also raised the equity issue that a zero allocation for JVP would be consistent with the zero allocation for USAP.

The commenter requested that the word ''shoreside'' be added to one of the FMP objectives because the word was removed by the Council in finalizing this objective after 2 years of having been included in that objective. The commenter stated that, by eliminating this word, the Region's shoreside processors become less competitive globally than large offshore processing vessels would be, which the commenter found contrary to national standard 8.

The commenter also included suggestions for EFH, which it submitted to the Council on July 27, 1998, and other suggestions for improving management of the fishery.

Response: NMFS disapproved the spawning closures.

Regarding the request for disapproval of JVP, the amount expected to be used by DAP was estimated and subtracted from the DAH, along with herring transported to Canada (BT). The FMP provides that, if there is any DAH remaining, it may be made available for JVP. Such was the case. Regarding the comment that since USAP is zero, JVP should be zero, the Council addressed this issue by voting at its July 1999 meeting to increase USAP to 20,000 mt for the 2000 fishing year and to establish the same amount for JVPt. The Council's request and attendant analysis are under NMFS review.

In response to the commenter's request that the word ''shoreside'' should be added to one of the FMP objectives the Council, after public discussion, chose not to take the position that either shoreside processors or existing small freezer trawlers were more desirable than the other and decided to forward the FMP without the word ''shoreside'' in that objective. NMFS disagrees that the objective, as approved, violates national standard 8.

The commenter's suggestions for EFH and improving management of the fishery are acknowledged and were previously responded to in association with approval of the Northeast Omnibus EFH Amendment.

Comment 8: A commenter stated that USAP should be at least equal to JVP; the Mid-Atlantic Council should align large vessel size in the mackerel fishery with the New England Council's herring vessel size; the days out of the fishery scheme is too burdensome to be effective; and a roe fishery should not be allowed because while searching for herring with the proper roe content, large amounts of herring are discarded. The commenter added that allowing roe fishing is shortsighted because once established, the economic pressure of such a lucrative fishery would make curtailing it politically impossible.

Response: As to USAP being equal to JVP, see response to comment 7.

With regard to aligning large vessel size in the mackerel fishery with the vessel size established by this FMP, as stated previously, the Atlantic Herring and Atlantic Mackerel fishery management plans are separate from each other (neither adversely affecting the other). Their differences do not hinder either plan from meeting its respective objectives and there are no practical differential impacts on vessels currently subject to the size specifications. Nevertheless, NMFS will continue to work with the Councils and the Commission to resolve these inconsistencies in order to facilitate FMP administration as they continue to develop future management measures.

NMFS disapproved the proposed days-out-of-the-fishery provision.

After exploring alternatives for allowing a roe fishery, the Council chose to allow this activity and to monitor its development. This allows the cautious development of a fishery that takes advantage of the high value of herring roe, while at the same time protecting the resource. Furthermore, the possession of herring roe is only authorized if carcasses are retained. Should the amount of herring harvested for roe become a concern, the Council may initiate a framework adjustment action to implement additional management measures to limit the harvest of herring for roe.

Comment 9: A commenter raised the need for an ecosystem-wide, integrated approach to population assessments.

Response: NMFS acknowledges that ecosystem approaches to fishery assessment and management are desirable and is working on such approaches that may prove useful in the future. However, the current population assessment is consistent with the best available scientific information and scientific practices, is consistent with requirements of applicable law, and is adequate to manage the herring fishery effectively.

Comment 10: A commenter argued for a prohibition on bottom trawls during the spawning season and added that fixed-date spawning closures will not be effective.

Response: NMFS disapproved the spawning closures measure.

Comment 11: A commenter disagreed with the size restrictions on domestic vessels and the establishment of an ''at-sea processing'' sector, which could discriminate against large vessels. The commenter argued that the size restriction was included in the FMP with the intent of eliminating an existing freezer trawler. The commenter argued further that there is no analysis on ''the effect or consequence of including or excluding vessels based on their length, tonnage, or horsepower either individually, all three, or a combination of any two of the specifications''. The commenter concluded that the vessel size limits adversely affect the ability of those who would develop and supply the export markets for whole round frozen-at-sea herring.

Response: The Council did not intend to exclude any current participants in the herring fishery, but only to restrict the size of vessels. The Council reasoned that restricting the size of vessels entering the open access fishery would slow the increase in harvest rates. It stated that this is consistent with the 1998 SARC recommendation that the herring harvest be increased in an incremental manner until the precision of stock estimates can be improved. In actual effect, this measure allocates the herring resource to existing participants and future participants that comply with the size restrictions. For the vessels identified as having caught herring in 1997, the maximum length was 126 ft (38.4 m), the maximum horsepower was 2,100, and the maximum GRT was 246. While there are mid-water trawl vessels that exceed these criteria and may desire to participate in the fishery in the future, there were no vessels actively participating in the herring fishery during development of this FMP that exceeded the size limits specified in the FMP.

The FMP provides that vessels over the size limits for harvesting herring may participate in the fishery by

processing at sea. The annual specification process, in this case, USAP, which is set at zero initially, is intended to provide a mechanism for the Council to control, if necessary, the development of large vessel at-sea processing capability for the herring fishery. While the question of excess capacity is not solely one of vessel size, given the existence of available capacity in the Northeast Region and recent attempts to reduce overall capacity in other U.S. fisheries, the Council chose not to allow large domestic vessels in the fishery until it is certain that the capacity they represent can be accommodated.

The Council set the initial specification for USAP at zero. However, it voted at its July 1999 meeting to request an increase in USAP to 20,000 mt for the 2000 fishing year. The Council request and analysis are currently under NMFS review.

Comment 12: A commenter considered the FMP to be overly broad and exceeding the intent of Congress. The commenter specifically cited the breadth of EFH designation, noting that EFH appeared to be designated over the range of the species, and in estuarine and coastal waters of the states.

Response: These concerns were addressed in the Northeast Omnibus EFH Amendment, which is incorporated into this action, and summarized here. The Magnuson-Stevens Act defines EFH as those waters and substrate necessary to fish for spawning, breeding, feeding, or growth to maturity. Therefore, the geographic scope of EFH must be sufficiently broad to encompass the biological requirements of the species. The information that the Councils used for EFH designation was primarily species distribution and relative abundance data, which is ''level 2'' information under the EFH regulations (50 CFR 600.815). Since the information available was not more specific (e.g., did not show species production by habitat type), the approach prescribed by the regulations led to fairly broad EFH designations. The EFH regulations at 50 CFR 600.10 interpret the statutory definition of EFH to include aquatic areas that are used by fish, including historically used areas, where appropriate, to support a sustainable fishery and the managed species' contribution to a healthy ecosystem, provided that restoration is technologically and economically feasible. The Councils' EFH designation is consistent with these requirements.

Comment 13: A commenter stated that the conservation and enhancement recommendations for non-fishing impacts to EFH that are provided in the omnibus EFH amendments are neither based on the best available science, nor sufficiently supported. The commenter contended that the recommended measures do not take into consideration current practices, and are likely to be in conflict with measures being pursued under other regulatory programs. The commenter also stated that the Magnuson-Stevens Act did not empower the Councils to address non-fishing activities.

Response: NMFS disagrees. The information presented in the omnibus EFH amendments is well researched and is substantiated by the best available scientific information. The commenter did not provide examples of specific information not considered by the Councils.

Conservation and enhancement recommendations for non-fishing industries were included to satisfy the requirements of section 303(a)(7) of the Magnuson-Stevens Act to ''identify other actions to encourage the conservation and enhancement of [EFH].'' This information is provided to assist non-fishing industries in avoiding impacts to EFH. The recommendations are neither posed as, nor meant to be, binding in nature. It is up to the discretion of the non-fishing industries and relevant regulatory agencies whether these recommendations are implemented.

Additionally, under section 305(b) of the Magnuson-Stevens Act, NMFS is required, and the Councils are authorized, to make conservation recommendations to any Federal or state agency regarding any activity that would adversely affect EFH. Moreover, Federal agencies are required to respond to these recommendations in writing.

Comment 14: A commenter stated that the amendment contains no meaningful threshold of significance or likelihood of adverse effect on habitat for non-fishing impacts. The commenter suggested that the consultation and conservation recommendation provisions of the Magnuson-Stevens Act will be burdensome and unworkable. The commenter also contended that the consultation procedures will be redundant with requirements of the National Environmental Policy Act (NEPA), costly, and time-consuming.

Response: The Magnuson-Stevens Act requires Federal action agencies to consult with NMFS on activities that may adversely affect EFH. Adverse effects, as defined at 50 CFR 600.810(a), means any impact that reduces the quality and/or quantity of EFH. Adverse effects may include, for example, direct effects through contamination or physical disruption, indirect effects such as loss of prey or reduction in species fecundity, and site-specific or habitat-wide impacts, including individual, cumulative, or synergistic consequences of actions. Only actions that have a reasonably foreseeable adverse effect require consultation.

Consultations are not likely to be redundant or inefficient. The EFH regulations provide for streamlined consultation procedures, such as general concurrences and abbreviated consultations, that may be used when the activities at issue do not have the potential to cause substantial adverse effects on EFH. The EFH consultation requirements will be consolidated with other existing consultation and environmental review procedures wherever appropriate. This approach will ensure that EFH consultations do not duplicate other environmental reviews, yet still fulfill the statutory requirement for Federal actions to consider potential effects on EFH.

Comment 15: A commenter stated that the Omnibus EFH Amendment generally failed to address the potential for significant adverse impacts of this amendment on non-fishing entities, specifically citing the requirements of NEPA and the Regulatory Flexibility Act (RFA).

Response: The conservation and enhancement recommendations outlined in the Omnibus EFH Amendment include a review of suggested measures for municipal, state, and Federal agencies and other organizations for the conservation and enhancement of EFH. As stated earlier, these recommendations are non-binding. Any regulatory action that may reflect these recommendations will be subject to the analysis and public review required by state or Federal law, which will be the appropriate vehicle for consideration of impacts to both fishing and non-fishing entities.

In the environmental assessment (EA) included with the Omnibus EFH Amendment, the Council found, and NMFS concurs, that there will be no significant impacts on the human environment as a result of this amendment. The EFH regulations and NOAA policy require that NMFS coordinate EFH consultations with other consultation and commenting requirements under environmental review procedures currently in place. This will eliminate duplication and ensure a workable review process. The analytical requirements of the RFA apply only to regulatory actions for which a general notice of proposed rulemaking (i.e., notice-and- comment rulemaking) is required under the Administrative Procedure Act (APA) or

another statute. The requirements of the RFA did not apply to the approval of the EFH portions of the FMP, since a general notice of proposed rulemaking was not required. Nothing related to EFH of Atlantic herring was codified in regulatory text in 50 CFR part 600, because no regulatory measures related to EFH were proposed in the FMP.

Comment 16: A commenter charged that the EFH provisions of the FMP do not comply with Magnuson-Stevens Act national standards 2 (best available scientific information), and 7 (unnecessary duplication).

Response: As a part of the Council's Omnibus EFH Amendment, the Atlantic herring section was intended to address only habitat issues, including the EFH requirements of the Magnuson-Stevens Act.

The Omnibus EFH Amendment was developed with significant input from scientists of the NEFSC and is based upon the best scientific information available. In the strategic plan portion of the amendment, the Councils clearly stated their commitment to updating the amendment as new information becomes available. NMFS finds the amendment consistent with national standard 2.

The commenter did not elaborate upon the assertion that the amendment violates national standard 7, so NMFS assumes, for the purpose of responding to this comment, that the commenter believes that the EFH consultation process is duplicative of other federally required consultation processes. NMFS has determined that the EFH amendment is consistent with the Magnuson-Stevens Act, including national standard 7. Inter-agency consultations on Federal activities that may adversely affect EFH are required by the Magnuson-Stevens Act; they are not optional. Section 305(b)(2) of the Magnuson-Stevens Act states: ''Each Federal agency shall consult with the Secretary with respect to any action authorized, funded, or undertaken, or proposed to be authorized, funded, or undertaken, by such agency that may adversely affect any essential fish habitat identified under this Act.''

Existing Federal statutes such as the Fish and Wildlife Coordination Act, the Endangered Species Act (ESA), and NEPA already require consultation or coordination between NMFS and other Federal agencies. As explained earlier, EFH consultations will be conducted to the greatest extent possible under existing review processes and within existing process time frames. NMFS is committed to a consultation process that will be effective, efficient, and to the extent possible non-duplicative. The EFH regulations at 50 CFR 600.920 suggest that NMFS be consulted as early as possible in project planning so that appropriate conservation measures can minimize the potential for adverse effects to EFH. The amendment contains conservation recommendations that are appropriate for many Federal actions, and they can also serve as guidelines that should be considered during project planning.

Comment 17: A commenter expressed concern regarding the application of a framework adjustment process to EFH. The commenter was concerned that the framework process would allow changes to these measures to be published as a final rule without first publishing them as a proposed rule. The commenter stated that non-fishing interests lack representation at Council meetings and, therefore, will not have an opportunity to comment on actions regarding EFH. The commenter asserted that the framework adjustment process will foster inconsistencies in treatment among the different NMFS Regions and the Fishery Management Councils, thereby complicating the EFH consultation process. The commenter requested that the inclusion of these measures be delayed until revision of NMFS EFH interim final regulations and guidelines.

Response: The framework adjustment process requires the Councils, when making specifically allowed adjustments to the FMP, to develop and analyze the actions over the span of at least two Council meetings. The Councils must provide the public with advance notice of the meetings through publication of the meeting agenda in the **Federal Register**, the proposals and the analysis, and provide an opportunity to comment on the proposals prior to, and at, the second Council meeting. Upon review of the analysis and public comment, the Council may recommend to NMFS that the measures be published as a final rule, if certain conditions are met. NMFS may either publish the measures as a final rule, or as a proposed rule if NMFS or the Council determines that additional public comment is needed. NMFS believes that there is enough flexibility in the framework system to ensure that the affected parties will be able to participate. NMFS also believes that there is little likelihood of significant inconsistencies occurring between regions, since all measures are reviewed by NMFS Headquarters.

The list of measures that can be implemented by framework included in the FMP is inclusive to give the Councils maximum flexibility to respond quickly to fishery information as it becomes available and to adjust the regulations accordingly. As such, modifications to EFH and Habitat Areas of Particular Concern (HAPC) can be implemented in an expedited manner if circumstances warrant, based upon Council and NMFS approval. The framework adjustment process requires adherence to all applicable law.

Comment 18: A commenter recommended that the Area 1A TAC be adjusted upward, not to exceed 60,000 mt, with the condition that the combined TAC for Area 1A and 1B not exceed 70,000 mt. Other commenters asked for an upward adjustment to 55,000 mt or that Areas 1A and 1B be combined for a single quota of 70,000 mt.

Response: Since NMFS may only approve or disapprove an FMP measure, it was constrained to accept the 45,000 mt TAC for Area 1A. However, the Council voted at its May 3-4, 2000, meeting to request an inseason transfer of 15,000 mt of TAC from Area 1B (offshore) to Area 1A (inshore). The Council's request would increase the Area 1A quota to 60,000 mt and reduce the quota in Area 1B to 10,000 mt. The Council's request is currently under review.

Comment 19: A commenter stated that language should be clarified to allow landing of herring caught in any open area in an area that has been closed to directed fishing due to attainment of that area's TAC.

Response: The Council did not intend to disallow landing of herring caught in open areas in areas closed to directed fishing. Regulatory language has been clarified to allow landing of any amount of herring in areas where possession is restricted to 2,000 lb (907.2 kg) of Atlantic herring due to attainment of 95 percent of that area's TAC, provided such herring was caught lawfully in an open area and all gear is stowed and is not available for immediate use.

Comment 20: A commenter stated that the regulations prohibit transferring fish in or from closed areas, but that IWPs and USAPs in state waters are allowed to do so.

Response: The FMP allows vessels to transfer up to 2,000 lb (907.2 kg) of herring per day to other U.S. vessels in or from closed areas in Federal waters.

Comment 21: A commenter stated that the requirement that lobster and tuna fishermen who occasionally purchase bait at sea obtain permits is unnecessarily burdensome.

Response: Section 648.4(a)(10)(i)(A)(*1*) exempts a vessel that possesses herring solely for its own use as bait, providing the vessel does not have purse seine, mid-water trawl,

pelagic gillnet, sink gillnet, or bottom trawl gear on board, from the requirement to obtain an Atlantic herring permit. Also exempted under § 648.4(a)(10)(i)(2) is a skiff or other similar craft used exclusively to deploy the net in a purse seine operation during the fishing trip of a vessel that is duly permitted under part 648.

Comment 22: A commenter stated that defining a shore-based pump operator as a herring dealer will add confusion to dealer reporting requirements and will decrease report quality.

Response: NMFS agrees and has removed shore-based pump operators from the herring dealer definition.

Comment 23: A commenter stated that the definition for the VMS currently limits fishers to one approved system and that the regulation should provide a choice of VMS systems. Another commenter, who proposed its own VMS system as a low cost alternative to the existing NMFS-approved system, suggested that the unnecessarily high cost of the one approved VMS is inconsistent with national standard 8.

Response: To ensure efficient and expeditious implementation of the VMS requirement in the herring fishery, the Regional Administrator has determined that such requirements, at this time, should be consistent with existing VMS requirements in other fisheries, such as the Atlantic scallop fishery. The definition does not limit the fishery to one approved system. The opportunity exists for any vendor to apply to the Regional Administrator for approval of the vendor's VMS system. NMFS will annually approve VMS systems that meet the minimum performance criteria specified in § 648.9(b). Any changes to the performance criteria will be published annually in the **Federal Register** and a list of approved VMS systems will be published in the **Federal Register** upon addition or deletion of a VMS from the list.

Comment 24: A commenter stated that the final rule should consider incorporating the Council's recommended 2000 specifications previously approved by the Council (decreases JVPt by 20,000 mt and increases USAP by 20,000 mt).

Response: The Council has submitted its recommended 2000 specifications with an accompanying analysis to NMFS. Its submission package is undergoing NMFS review and is being processed separately as an inseason adjustment.

Comment 25: A commenter stated that it is unfair to U.S. fishermen selling herring to Canadian carriers to be limited by the FMP. The commenter suggested that the Boat Transfer (BT) of 4,000 mt be removed from the FMP to enhance free trade. The commenter further stated that the fixed gear (weir/stop seine) sector of the U.S. herring fishery should be exempted from the Area 1 TAC, as the Canadian fixed gear fishery is in New Brunswick, at least until the sector's annual harvest becomes a significant portion of the region's herring fishery.

Response: Because the removal of herring for purposes of transferring to Canadian carriers is part of the DAH, it must be included in OY calculations and restricted accordingly. The specification of BT allows the continuation of the historic trade in herring between the U.S. and Canada, while addressing the concerns of other U.S. processors by preventing this trade from being an unlimited transfer that reduces their access to the resource. While the commenter's suggestions are directed to future management measures rather than to these regulations, upon implementation of this rule the Council will have the ability to revise the specifications and TAC distribution method. It would be appropriate for the commenter to raise his concerns in the Council forum.

Comment 26: A commenter stated that the regulations should clarify the intent of the FMP, which is that a vessel may only land 2,000 lb (907.2 kg) of herring taken in an area closed because the TAC has been reached in a given calendar day. Other commenters stated that the regulations correctly note this limit, but do not include the FMP language, which reflects the Council's intent that a vessel on a 5-day trip (for instance) would not be allowed to land 10,000 lb (4,536 kg) of herring.

Response: The regulations have been clarified.

Comment 27: A commenter stated that NMFS authorized the broad use of framework adjustments to allow for expedited rulemaking, without demonstrating a need for such a provision. The commenter stated that this violates the APA because regulations could be implemented without adequate opportunity for public comment. The commenter also stated that the framework process violates the Magnuson-Stevens Act because it fails to conform with the statutorily required FMP process for proposing regulatory changes.

Response: The FMP allows the Council to initiate action to add or adjust management measures if it finds that action is necessary to meet or be consistent with the goals and objectives of the FMP, or to address gear conflicts. After a management action has been initiated, the Council develops and analyzes appropriate actions over the span of at least two Council meetings. Prior to the second Council meeting, a framework document is prepared that discusses and shows the impacts of the alternatives, which is made available to the public prior to the second or final framework meeting. The public is invited to participate and comment, in person or writing, at all pertinent Council and Committee meetings during the development of the framework action. If the Council recommends to NMFS that the action be issued as a final rule, the Council must first consider and provide support and analysis for several factors, one of which is whether there has been adequate notice and opportunity for participation by the public and members of the affected industry.

NMFS believes that there is enough flexibility in the framework system to ensure that the affected parties are able to participate. For further discussion of the framework adjustment process, see response 17.

Comment 28: A commenter stated that the final rule needs to clearly express NMFS' commitment to protecting EFH of Atlantic herring to the greatest extent practicable and that HAPC need to be identified. At a minimum, at least one of the identified herring schools in each inshore and offshore area should be managed as a no-take school. The commenter also stated that this final rule should explicitly state that the Council, through its EFH Committee, consider impacts of fishing gear and practices (as well as non-fishing impacts) to this school-as-habitat approach to EFH and HAPC for herring.

Response: As stated in the Northeast Omnibus EFH Amendment incorporated into the FMP and this action, the Council determined, and NMFS concurred, that the most appropriate way to identify EFH for herring was by using scientific studies to quantify herring abundance and distribution, and applying this information as a proxy for estimating habitat utilization. The identification of HAPC is recommended by the EFH regulations, but not required. Further, the approach proposed by the commenter appears to be more of an attempt to manage the herring fishery than a provision for conservation of herring EFH.

Comment 29: A commenter stated that the final rule should require the applicable fishery managers to factor in the dietary needs of humpback whales and other marine mammals that are feeding on the Atlantic herring resource. The commenter said that the whale watching industry has been significantly impacted by the departure of whales

from nearshore Federal waters due to the commercial removals of entire herring schools from areas such as Schoodic Ledge.

Response: The FMP states that the annual specification of OY will include consideration of economic, social, and ecological factors, which is consistent with the Magnuson-Stevens Act and national standard guidelines. For fishing year 2000, the OY has been set at 224,000 mt with a total herring biomass estimated at 2.9 million mt. It is projected that there will be a 39 percent increase in overall stock size. The 2000 specifications have been set at a conservative level well below ABC to allow for controlled industry growth. This conservative specification level also acknowledges the need to provide for an adequate forage base for marine mammals. However, the degree to which whales are dependent on the herring resource is unknown. Trophic interactions between the herring fishery and humpback and fin whales, as well as other marine mammals, were considered during the ESA consultation on the FMP. Given the complexity of ecosystem interactions, there is no demonstrated link between herring abundance and marine mammal survival and recovery. The ESA consultation recognizes that in the past the herring fishery has apparently affected the distribution of whales that eat herring. However, it also notes that the conversion of the herring fishery into a regulated fishery will benefit protected species management by the overall monitoring of effort patterns in the fishery and the designation of area-based TACs based on the health of the resource in those areas. In addition, one effect of the FMP is to limit harvest from Area 1 in the Gulf of Maine where the resource is considered fully utilized and move more of the fishery further offshore to Areas 2 and 3, where the resource is not considered fully utilized. The combination of area-based TACs and the movement of the herring fishery further offshore would benefit the whale watching industry in the nearshore Federal waters by preventing localized depletions of herring that may affect the distribution of whales in that area.

Comment 30: A commenter stated that the NEFMC/Commission meetings were held in locations that were relatively inaccessible to the fixed gear fishermen in the herring fishery. The commenter said that this resulted in unfair representation at Council meetings of some sectors of the industry.

Response: Both the Council and Commission attempt to accommodate as much as possible all sectors of the fisheries within their areas of authority. Council meetings are held throughout New England during the course of the year. In deciding upon meeting sites, the Council and Commission must balance budgetary, staff, travel, facilities and other issues. Industry representatives and members of the public have the opportunity to submit written comments for the Council to consider during its deliberations. However, at least one representative of the fixed gear sector of this fishery is a member of the Council.

Regarding the 2001 meeting schedule, the commenter may appropriately raise his concern directly with the Council and Commission.

Comment 31: A commenter stated the need to clarify vessel sizes in the regulations. Another commenter would extend this clarification to capacity, horsepower, and to discrepancies between Herring and Mackerel fishery management plans. A third commenter asked for clarification that a vessel's total (not a single engine) horsepower of its main propulsion machinery cannot exceed 3,000 horsepower.

Response: Clarifications have been made, where possible, through modification of the regulatory text in this final rule (See Changes from the Proposed Rule).

Comment 32: A commenter suggested that the Atlantic herring dealer definition include harvesters who sell herring to individuals for personal use.

Response: The definition of a dealer is not intended to identify persons who sell herring to end users, but rather to identify the person who first receives herring from a harvesting vessel. Including harvesters who sell herring to individuals for personal use in the Atlantic herring dealer definition, therefore, was not the intent of the Council, nor would it be consistent with the definition of a dealer in § 648.2.

Comment 33: A commenter stated that the definition of USAP is not clear as to whether the specification refers to the quantity of whole round herring received by vessels for processing, or the quantity of finished, processed product.

Response: The definition of USAP has been modified in this final rule to clarify that it is the quantity of whole round herring that can be received for processing by U.S. vessels issued an Atlantic herring processing permit.

Comment 34: A commenter stated that the SARC recommended that it would not be prudent to consider MSY above 200,000 mt until the sizes of recent year classes were better estimated.

Response: The Council's Herring PDT and the Commission's Technical Committee considered the SARC's recommendation. Their response and a complete discussion of this issue may be found in the Overfishing Definition Section, Volume I, section 2.6 of the FMP.

Comment 35: A commenter mentioned that, because of NMFS' rejected management measures in the proposed rule that would have protected species of concern, it must undertake an additional Section 7 formal consultation to determine if the regulations implementing the partially approved FMP jeopardize any of these listed species.

Response: On July 13, 1999, a BO on the proposed FMP concluded that the operation of the Federal Atlantic herring fishery under the FMP could adversely affect but would not likely jeopardize the continued existence of endangered and threatened species under NMFS' jurisdiction and also would not likely destroy or adversely modify right whale critical habitat.

Subsequent to completion of the BO, NMFS disapproved certain management measures in the proposed FMP. These included: (1) mandatory days out of the fishery; (2) spawning area closures; (3) adjustment of the TAC for Management Area 1A; and (4) a prohibition on specifying TALFF. Modification of the FMP does not automatically trigger reinitiating a formal Section 7 consultation. Re-initiation is only required if the consulting agency has retained involvement or control over the action, and the agency action has been modified in a manner that causes an effect to the listed species or critical habitat not considered in the BO. The FMP, as amended, will not cause an effect to listed species or critical habitat that has not been previously considered in the BO.

As stated in the BO, the primary benefit of regulating the Atlantic herring fishery will be the overall monitoring of effort patterns in the fishery and designation of area-based TACs established based on the health of the resource in those areas. An annual scientific review of the resource will allow for adjustments to the fishery as a result of fluctuations in stock size. The BO considered the adjustment of TAC in Management Area 1A, mandatory days out of the fishery and prohibition on specifying a TALFF as supporting administrative measures to the area-based TAC effort control measure. Since the method for controlling effort in the herring fishery has not been changed, disapproval of the measure for adjustment of the Area 1A TAC is not expected to result in effects to protected species or critical habitat not previously considered in the BO. Similarly,

although the measure that would have required mandatory days out of the fishery has been disapproved, the trigger that closes the fishery in any one management area is still in place and is the same as what was considered in the BO. Finally, while NMFS disapproved the prohibition on establishing a TALFF, it has set the TALFF for the herring fishery at zero. Even if specified above zero, a TALFF would be specified from that portion of the OY that would not be taken in the domestic harvest. Therefore, disapproval of a prohibition on setting a TALFF is not expected to result in an effect to protected species that was not considered in the BO.

The Council included Area 1 spawning closures as an additional measure to help ensure the health of the herring resource. The Council also included a provision to add area closures by framework action. That provision of the FMP remains in place. The BO considered the effect that spawning closures would have on listed species, and concluded that spawning closures could provide some benefit to listed species. This conclusion was moderated, however, with information in the BO that the efficacy of spawning closures could be affected by the 2,000-lb (907.2-kg)/day incidental catch allowance and/or be offset by the potential for effort shifts causing amplification of any adverse effects of the fishery during the time right before and after spawning closures and in areas outside the boundaries of these closures. In addition to these considerations, the BO also examined the trophic relationships between listed species and herring in the current fishery where there are no spawning closures. Given the limited information available on these trophic relationships, the BO could only conclude that while competition with the herring fishery may affect the availability of sufficient prey for endangered whales, the complexity of ecosystem interactions and the logistical difficulties of conducting necessary sampling have hindered conclusive demonstration of the existence of competition. Since the BO did consider the effects to listed species and critical habitat in the presence and absence of spawning closures, re-initiation of the Section 7 consultation is not required. A new Section 7 consultation would not provide any additional or new information that could change the final determination of the BO.

Changes from the Proposed Rule

In § 648.2, the definition of ''Atlantic herring dealer'' is changed to reflect that shore-based pump operators do not automatically qualify as Atlantic herring dealers. In the proposed rule, shore-based pump operators were designated as dealers because of the difficulty in identifying all the persons who receive herring from the pump operator. These persons have since been identified and will provide fisheries managers with better and more complete data.

In § 648.2, the definition of ''Atlantic herring processor'' is clarified by stipulating that an Atlantic herring dealer who purchases Atlantic herring for resale as bait must do so from a fishing vessel with a Federal Atlantic herring permit to be considered an Atlantic herring processor.

In § 648.2, the definition of ''Council'' is modified by adding ''spiny dogfish fishery'' to the list of fisheries under the auspices of the Mid-Atlantic Fishery Management Council. This brings the definition up to date to reflect approval of the Spiny Dogfish Fishery Management Plan.

In § 648.2, the definition of ''horsepower'' is removed because, as proposed, it would have been administratively inconsistent with its use as applied to other fisheries of the Northeastern United States.

In § 648.2, the definition of ''processing'' is corrected by removing the words ''icing, bleeding, heading or gutting'' of Atlantic herring as an exception to the means of preparation of herring to render it suitable for use as bait.

In § 648.2, the definition of ''U.S. at-sea processing (USAP)'' is clarified to show that USAP means the specification of the total amount of herring available for processing by U.S. vessels issued an Atlantic herring processing permit.

In § 648.4, paragraph (a)(10)(i)(B) is clarified to show that the total horsepower of a vessel's main propulsion machinery cannot exceed 3,000 horsepower. Prior to this clarification, the regulation could have been interpreted to apply horsepower restrictions to a single engine, which would have allowed a multi-engine vessel to exceed the limit established in the FMP.

In § 648.4, paragraph (c)(2)(vi)(C) is revised to indicate that the VMS vendor receipt required for certain vessels must be submitted initially not later than March 12, 2001.

In § 648.6, the first sentence of paragraph (a) is corrected by substituting the word ''dealers'' for ''purchasers.'' The section further retains language pertaining to small-mesh multispecies used as bait, which was added to § 648.6 after submission of the proposed rule for Atlantic herring. Atlantic herring is also added as an exemption from the requirement to possess a valid permit or letter of authorization when purchasing herring at sea if it is to be used for one's own use as bait and certain specific fishing gear is not on board.

In § 648.7, the first sentence of paragraphs (a)(3)(i) and (b)(1)(i) were proposed for revision and the heading of paragraph (b)(1)(i) was proposed for removal. However, these revisions were implemented in the final rule implementing Amendment 1 to the FMP for Atlantic Bluefish Fishery and, therefore, are not repeated in this final rule.

In § 648.7, paragraph (b)(1)(iii)(A) is clarified.

In § 648.11, paragraph (a) is corrected by substituting the word ''require'' for the word ''request'' as pertains to the Regional Administrator's authority to place sea samplers/observers aboard federally permitted fishing vessels.

In § 648.13, paragraph (e) is redesignated as paragraph (f) and is further corrected by modifying paragraph (f)(1) to reflect that persons receiving bait at sea for their own personal use are exempt from the requirement to possess a valid Atlantic herring permit or a letter of authorization from the Regional Administrator, providing certain specific fishing gear is not on board the vessel.

In § 648.14, paragraph (a)(103) is corrected to reflect that purchasers of herring at sea to be used for their own use as bait do not require an Atlantic herring dealer permit.

In § 648.200, paragraph (a) is corrected to reflect that the Atlantic Herring Plan Development Team shall meet at least annually, but no later than July, with the Commission's Atlantic Herring Plan Review Team to develop and recommend specifications for the following year to the Council. The requirement in the proposed rule to present the specifications recommendation to the Council at its July meeting is removed.

In § 648.202, paragraph (d) is redesignated as paragraph (e) and a new paragraph (d) is added. The new paragraph (d) corrects an inadvertent omission in the proposed rule by allowing the landing of herring in closed areas if such herring were caught in open areas. Paragraph (a) is corrected to reflect the addition of paragraph (d) and the newly re-designated paragraph (e). Paragraph (a) is also modified to clarify that once the TAC is reached, a vessel may only land 2,000 lb (907.2 kg) of herring in a given calendar day, without regard to the length of the trip.

In § 648.203, paragraph (b) is corrected to refer to the U.S. at-sea processing specification as ''USAP.''

In § 648.206, the title is changed from ''Framework specifications'' to ''Framework provisions.''

NOAA codifies its OMB control numbers for information collection at 15 CFR part 902. Part 902 collects and displays the control numbers assigned to information collection requirements of NOAA by OMB pursuant to the Paperwork Reduction Act (PRA). This final rule codifies OMB control numbers for 0648-0404 for §§ 648.9 and 648.205.

Under NOAA Administrative Order 205-11, dated December 17, 1990, the Under Secretary for Oceans and Atmosphere, NOAA, has delegated to the Assistant Administrator for Fisheries, NOAA, the authority to sign material for publication in the **Federal Register**.

The President has directed Federal agencies to use plain language in their communications with the public including regulations. To comply with this directive, we seek public comment on any ambiguity or unnecessary complexity arising form the language used in this rule. Send comments to Patricia Kurkul (see **ADDRESSES**).

Classification

NMFS has determined that the FMP that this rule implements is necessary for the conservation and management of the Atlantic herring fishery and is consistent with the national standards of the Magnuson-Stevens Act and other applicable laws.

Because current data indicate that the 2000 TAC this final rule implements for Management Area 1A is fast being reached, and an inseason adjustment that has been requested by the Council to address the situation cannot be considered until the 2000 specifications are in place, and given the immediate conservation benefit that would result from implementing the 2000 fishing specifications, it is contrary to the public interest to delay for 30 days the effective date of regulatory provisions establishing the specification process, management areas, TAC controls and prohibitions related to the TAC controls. Failure to implement the 2000 specifications without delay could have a negative impact on fishers and other entities dependent on a steady supply of herring. Therefore, the Assistant Administrator for Fisheries, NOAA, finds under 5 U.S.C. 553(d)(3) that good cause exists not to delay for 30 days the effective date of §§ 648.14(x)(10) and (bb)(7) and (bb)(10), 648.200, 648.201 and 648.202. In addition, §§ 648.1, 648.2 and 648.206 contain provisions which have no substantive effect and therefore 5 U.S.C. 553 does not apply.

This action has been determined to be significant for the purposes of Executive Order 12866.

The Council prepared an FEIS for the FMP; a notice of availability was published on September 24, 1999 (64 FR 51753). NMFS determined, upon review of the FMP/FEIS and public comments, that approval and implementation of the FMP is environmentally preferable to the status quo. The FEIS demonstrates that it contains management measures able to prevent overfishing; protect harbor porpoise; provide economic and social benefits to the fishing industry in the long term; and contribute to better balance in the ecosystem in terms of the herring resource.

NMFS completed a FRFA that contains the items specified in 5 U.S.C. 604(a) as follows:

Final Regulatory Flexibility Analysis

Need for and Objectives of the Final Rule

This final rule is necessary to implement approved measures contained in the Atlantic Herring FMP. The intent of this final rule is to manage the Atlantic herring fishery in compliance with the regulations pursuant to the Magnuson-Stevens Act and the FMP and to prevent overfishing of the herring resource. This final rule also withdraws approval of the Atlantic herring PMP and removes previous regulations related to Atlantic herring (50 CFR 600.525).

Public Comments

There were 12 sets of public comments on the FMP submitted during the comment period established by the NOA. Those comments were considered by NMFS before it partially approved the FMP and are characterized and responded to by NMFS in the Comments and Responses section of this final rule. NMFS also received 14 sets of written comments on the proposed rule and those comments that specifically addressed the proposed rule were considered in approval and implementation of the final rule effecting the FMP and its management measures. Responses to comments on economic impacts of the proposed rule are contained in the Response to Comments section in the preamble and are not repeated here. Most of the comments made on the proposed rule addressed the management measures in the FMP that were previously disapproved by NMFS, rather than the proposed rule itself. No significant changes to the rule were made as a result of comments received.

Number of Small Entities

The identification of the number of small entities affected by this final rule is complicated in two ways. First, vessels fishing for herring are not currently required to possess Federal herring permits. Second, while many vessels currently landing herring possess other Federal permits or letters of authorization, there are some vessels that fish for herring only in state waters that do not possess such permits or authorizations. Only those vessels that have another Federal permit are required to submit vessel trip reports and can be readily identified in the permit, vessel trip report, and dealer weighout databases.

Because some vessels may target herring for a small number of trips each year, vessels were identified as participating in a ''directed'' fishery for herring if they landed at least one trip of one metric ton (2,205 lb) or more of herring during 1997. There were only 61 vessels, which landed 97,300 mt, amounting to 99 percent of all herring landings in the Northeast, while 140 vessels landing herring during 1997 accounted for less than 71 mt. Expressed in terms of revenues, the 61 vessels derived about $10.7 million from herring fishing while the remaining vessels' total herring revenues did not exceed $8,000. Therefore, for RFA purposes, the set of affected vessels is limited to these 61 vessels in the directed herring fishery.

Of the 61 vessels, 17 of them derived, on average, less than $1,000 in herring revenues in 1997. The remaining 44 vessels were divided into two groups. The first group of 25 vessels derived, on average, $5,534 from herring revenues in 1997. The remaining group of 19 vessels earned, on average, $524,000 from herring revenues in 1997. The 44 vessels constitute 22 percent of the 201 vessels that landed some herring in 1997 and 72 percent of the 61 vessels in the directed herring fishery. The regulations would mostly affect the group of 19 vessels that, on average, earned $524,000 from herring revenues in 1997. These vessels alone represent 31 percent of all business entities in the directed herring fishery. Whether the affected set of vessels is defined to include only 61 vessels or all of the 201 vessels that landed herring in 1997, the regulations would affect a substantial number of the small entities in the fishery.

Cost of Compliance

Vessels, dealers, and processors would be required to obtain permits and comply with reporting requirements. Some participants in the fishery already have a Federal permit and comply with reporting requirements for another fishery. The compliance costs are primarily due to the time required to complete and submit the necessary forms. The annual costs to comply with these requirements, per vessel, are estimated at $7.80 for vessel permits, $25.32 for operator permits, $27.00 for vessel trip reports, and $52.00 (maximum) for interactive voice reports. Total annual compliance costs per vessel are thus about $112 per vessel for these measures. The total annual cost for each dealer is estimated to be $1.58 for permits and $78.70 for weekly landing reports, for an annual total of about $80 per dealer. The annual compliance costs for each processor is also estimated to be $1.58 for permits and $7.83 for an annual report, or a total of $9.41 per processor. These costs are considered insignificant relative to other costs of doing business.

Vessels that intend to harvest > 500 mt of herring per year, or that harvested > 500 mt of herring in the previous year, would be required to operate a VMS unit. The annual cost per vessel to purchase, install, and operate a VMS unit is estimated to be $2,700. Additional costs would be incurred due to burden-hour estimates of the requirements associated with VMS, estimated at an additional $111 per vessel per year. At the > 500 mt threshold, this would be approximately 4 percent of annual revenues from herring. When compared to the average herring revenues of the 19 vessels that landed most of the herring in 1997 and that would be required to have a VMS, based on their 1997 landings, this cost is equal to approximately 0.5 percent of the average revenues for this group.

Minimizing Significant Economic Impacts on Small Entities

An analysis indicated that the alternatives implemented by this final rule would minimize significant economic impacts while achieving the conservation goals and objectives of the FMP. The Council considered other alternatives but did not choose them because it determined that they would limit the ability of some smaller vessels in other fisheries to shift into the herring fishery, or would be difficult to implement or monitor accurately, or would conflict with FMP goals. For a description of the alternatives considered but rejected, see the section of the proposed rule (65 FR 11956).

Notwithstanding any other provision of law, no person is required to respond to nor shall any person be subject to a penalty for failure to comply with a collection of information subject to the requirements of the Paperwork Reduction Act (PRA) unless that collection-of-information displays a currently valid OMB control number.

This final rule references foreign fishing vessel activity reports, which is a collection-of-information requirement subject to the PRA that was previously approved by OMB under control number 0648-0075. These reports are estimated to require 6 minutes/response.

This final rule also contains 12 new collection-of-information requirements subject to the PRA. The collection of this information has been approved by OMB, and the OMB control numbers and the estimated time for a response are listed as follows:

Open access Atlantic herring permits, OMB control number 0648–0202 (30 minutes/response).

Operator permits, OMB control number 0648–0202 (60 minutes/response).

Dealer permits, OMB control number 0648–0202 (5 minutes/response(trip)).

Processor permits, OMB control number 0648–0202 (5 minutes/response).

Vessel trip reports, OMB control number 0648–0212 (5 minutes/response).

Interactive voice response system reports, OMB control number 0648–0212 (4 minutes/response).

Dealer logbooks reports, OMB control number 0648–0229 (2 minutes/response).

Annual processor reports, OMB control number 0648–0018 (30 minutes/response).

Vessel monitoring system verification requirement, OMB control number 0648–0404 (2 minutes/response).

Vessel monitoring system reports, OMB control number 0648–0404 (5 seconds/response).

Vessel monitoring system installation, OMB control number 0648–0404 (60 minutes/response).

Herring carrier exemption from VMS requirements authorization letter, OMB control number 0648–0404 (2 minutes/response).

The aforementioned response estimates include the time for reviewing instructions, searching existing data sources, gathering and maintaining the data needed, and completing and reviewing the collection of information. Send comments regarding these burden estimates, or any other aspect of this data collection, including suggestions for reducing the burden, to NMFS and OMB (see **ADDRESSES**).

List of Subjects

15 CFR Part 902

Reporting and recordkeeping requirements.

50 CFR Parts 600 and 648

Fisheries, Fishing, Foreign Vessels, Reporting and recordkeeping requirements.

Dated: November 29, 2000.

William T. Hogarth,

Deputy Assistant Administrator for Fisheries, National Marine Fisheries Service.

For the reasons set out in the preamble, 15 CFR chapter IX, part 902 and 50 CFR chapter VI, parts 600 and 648 are amended as follows:

15 CFR Chapter IX

PART 902—NOAA INFORMATION COLLECTION REQUIREMENTS UNDER THE PAPERWORK REDUCTION ACT; OMB CONTROL NUMBERS

1. The authority citation for part 902 continues to read as follows:

Authority: 44 U.S.C. 3501 *et seq.*

2. In § 902.1, the table in paragraph (b) under 50 CFR is amended by revising the OMB control number in numerical order for § 648.9, and by adding in numerical order an entry for § 648.205 with a new OMB control number to read as follows:

§ 902.1 OMB control numbers assigned pursuant to the Paperwork Reduction Act.

* * * * *

(b) * * *

CFR part or section where the information collection requirement is located	Current OMB control number (all numbers begin with 0648–)
* * * * *	
50 CFR	
* * * * *	
648.9	* * * -0202, -0307, and -0404
* * * * *	
648.205	-0404
* * * * *	

50 CFR Chapter VI

PART 600—MAGNUSON-STEVENS ACT PROVISIONS

1. The authority citation for part 600 continues to read as follows:

Authority: 5 U.S.C. 561 and 16 U.S.C. 1801 *et seq.*

§ 600.525 [Removed]

2. Remove § 600.525.

PART 648—FISHERIES OF THE NORTHEASTERN UNITED STATES

1. The authority citation for part 648 continues to read as follows:

Authority: 16 U.S.C. 1801 *et seq.*

2. In § 648.1, the first sentence of paragraph (a) is revised to read as follows:

§ 648.1 Purpose and scope.

(a) This part implements the fishery management plans (FMPs) for the Atlantic mackerel, squid, and butterfish fisheries (Atlantic mackerel, Squid, and Butterfish FMP); Atlantic salmon (Atlantic Salmon FMP); the Atlantic sea scallop fishery (Atlantic Sea Scallop FMP); the Atlantic surf clam and ocean quahog fisheries (Atlantic Surf Clam and Ocean Quahog FMP); the Northeast multispecies and monkfish fisheries ((NE Multispecies FMP) and (Monkfish FMP)); the summer flounder, scup, and black sea bass fisheries (Summer Flounder, Scup, and Black Sea Bass FMP); the Atlantic bluefish fishery (Atlantic Bluefish FMP); the spiny dogfish fishery (Spiny Dogfish FMP); and the Atlantic herring fishery (Atlantic Herring FMP).* * *

* * * * *

3. In § 648.2, the definitions for ''Council'', ''IVR system'', and ''Vessel Monitoring System'' are revised and the definitions for ''Atlantic herring'', ''Atlantic herring carrier'', ''Atlantic herring dealer'', ''Atlantic herring processor'', ''Border transfer'', ''JVPt'', ''Processing'', and ''U.S. at-sea-processing'' are added alphabetically to read as follows:

§ 648.2 Definitions.

* * * * *

Atlantic herring means *Clupea harengus*.

Atlantic herring carrier means a fishing vessel with an Atlantic herring permit that does not have any gear on board capable of catching or processing herring and that has on board a letter of authorization from the Regional Administrator to transport herring caught by another fishing vessel.

Atlantic herring dealer means:

(1) Any person who purchases or receives for a commercial purpose other than solely for transport or pumping operations any herring from a vessel issued a Federal Atlantic herring permit, whether offloaded directly from the vessel or from a shore-based pump, for any purpose other than for the purchaser's own use as bait; or

(2) Any person owning or operating a processing vessel that receives any Atlantic herring from a vessel issued a Federal Atlantic herring permit whether at sea or in port.

Atlantic herring processor means a person who receives unprocessed Atlantic herring from a fishing vessel issued a Federal Atlantic herring permit or from an Atlantic herring dealer for the purposes of processing; or the owner or operator of a fishing vessel that processes Atlantic herring; or an Atlantic herring dealer who purchases Atlantic herring from a fishing vessel with a Federal Atlantic herring permit for resale as bait.

* * * * *

Border transfer (BT) means the amount of herring specified pursuant to § 648.200 that may be transferred to a Canadian transport vessel that is permitted under the provisions of Pub. L. 104-297, section 105(e).

* * * * *

Council means the New England Fishery Management Council (NEFMC) for the Atlantic herring, Atlantic sea scallop, and the NE multispecies fisheries, and the Mid-Atlantic Fishery Management Council (MAFMC) for the Atlantic mackerel, squid, and butterfish; the Atlantic surf clam and ocean quahog; the summer flounder, scup, and black sea bass fisheries; the spiny dogfish fishery; and the Atlantic bluefish fishery.

* * * * *

IVR System means the Interactive Voice Response reporting system established by the Regional Administrator for the purpose of monitoring harvest levels for certain species.

* * * * *

JVPt, with respect to the Atlantic herring fishery, means the specification of the total amount of herring available for joint venture processing by foreign vessels in the EEZ and state waters.

* * * * *

Processing, or to process, in the Atlantic herring fishery means the preparation of Atlantic herring to render it suitable for human consumption, bait, commercial uses, industrial uses, or long-term storage, including but not limited to cooking, canning, roe extraction, smoking, salting, drying, freezing, or rendering into meal or oil.

* * * * *

U.S. at-sea processing (USAP), with respect to the Atlantic herring fishery, means the specification, pursuant to § 648.200, of the amount of herring available for processing by U.S. vessels issued an Atlantic herring processing permit as described in § 648.4(a)(10)(ii).

* * * * *

Vessel Monitoring System (VMS) means a vessel monitoring system or VMS unit as set forth in § 648.9 and approved by NMFS for use on Atlantic sea scallop, NE multispecies, monkfish, and Atlantic herring vessels, as required by this part.

* * * * *

4. In § 648.4, the section heading is revised, and paragraphs (a)(10) and (c)(2)(vi) are added to read as follows:

§ 648.4 Vessel permits.

(a) * * *

(10) *Atlantic herring vessels*—(i) *Atlantic herring permit.*

(A) Except as provided herein, any vessel of the United States must have been issued and have on board a valid Atlantic herring permit to fish for, catch, possess, transport, land, or process Atlantic herring in or from the EEZ. This requirement does not apply to the following:

(*1*) A vessel that possesses herring solely for its own use as bait, providing the vessel does not have purse seine, mid-water trawl, pelagic gillnet, sink gillnet, or bottom trawl gear on board; or

(*2*) A skiff or other similar craft used exclusively to deploy the net in a purse seine operation during a fishing trip of a vessel that is duly permitted under this part.

(B) *Eligibility*. A vessel of the United States is eligible for and may be issued an Atlantic herring permit to fish for, catch, take, harvest, and possess Atlantic herring in or from the EEZ unless the vessel is ≥ 165 feet (50.3 m) in length overall (LOA), or > 750 GRT (680.4 mt), or the vessel's total main propulsion machinery is > 3,000 horsepower.

(ii) Atlantic herring processing permit. A vessel of the United States that is > 165 feet (50.3 m) LOA, or > 750 GRT (680.4 mt) is eligible to obtain an Atlantic herring processing permit to receive and process Atlantic herring subject to the U.S. at-sea processing (USAP) allocation published by the Regional Administrator pursuant to § 648.200. Such vessel may not receive or process Atlantic herring caught in or from the EEZ unless the vessel has been

issued and has on board an Atlantic herring processing permit.

(iii) *Atlantic herring carrier vessels—letter of authorization.* An Atlantic herring carrier vessel permitted under paragraph (a)(10)(i)(A) of this section must have been issued and have on board the vessel a letter of authorization to transport Atlantic herring caught by another permitted fishing vessel. The letter of authorization exempts such vessel from the VMS and IVR reporting requirements as specified in subpart K, except as otherwise required by this part. An Atlantic herring carrier vessel may request and obtain a letter of authorization from the Regional Administrator.

(iv) *Change in ownership.* See paragraph (a)(1)(i)(D) of this section.

* * * * *

(c) * * *

(2) * * *

(vi) An application for an Atlantic herring permit must also contain the following information:

(A) If the vessel operator caught > 500 mt of Atlantic herring in the previous fishing year, a statement so stating;

(B) If the vessel operator intends to catch > 500 mt of Atlantic herring in the current fishing year, a statement so stating;

(C) If the vessel operator either caught > 500 mt of Atlantic herring in the previous fishing year, or intends to catch > 500 mt of Atlantic herring in the current fishing year, a copy of a vendor installation receipt from a NMFS-approved VMS vendor, as described in § 648.9, must also be provided:

(*1*) From January 10, 2001, through March 12, 2001, not later than March 12, 2001;

(*2*) After March 12, 2001, with the application.

* * * * *

5. In § 648.5, the first sentence of paragraph (a) is revised to read as follows:

§ 648.5 Operator permits.

(a) *General.* Any operator of a vessel fishing for or possessing Atlantic sea scallops in excess of 40 lb (18.1 kg), NE multispecies, spiny dogfish, monkfish, Atlantic herring, Atlantic surf clam, ocean quahog, Atlantic mackerel, squid, butterfish, scup, black sea bass, or bluefish, harvested in or from the EEZ, or issued a permit, including carrier and processing permits, for these species under this part, must have been issued under this section, and carry on board, a valid operator permit.* * *

* * * * *

6. In § 648.6, paragraph (a) is revised to read as follows:

§ 648.6 Dealer/processor permits.

(a) *General.* (1) All dealers of NE multispecies, monkfish, Atlantic herring, Atlantic sea scallop, spiny dogfish, summer flounder, Atlantic surf clam, ocean quahog, Atlantic mackerel, squid, butterfish, scup, bluefish, and black sea bass, Atlantic surf clam and ocean quahog processors, and Atlantic herring processors or dealers as described in § 648.2, must have been issued under this section, and have in their possession, a valid permit or permits for these species. A person who meets the requirements of both the dealer and processor definitions of any of the aforementioned species' fishery regulations may need to obtain both a dealer and a processor permit, consistent with the requirements of that particular species' fishery regulations. Persons aboard vessels receiving small-mesh multispecies and/or Atlantic herring at sea for their own use exclusively as bait are deemed not to be dealers, and are not required to possess a valid dealer permit under this section, for purposes of receiving such small-mesh multispecies and/or Atlantic herring, provided the vessel complies with the provisions of § 648.13.

(2) [Reserved]

* * * * *

7. In § 648.7, the first sentence of paragraphs (a)(1)(i), and (a)(2)(i), and paragraph (f)(3) are revised; and new paragraphs (a)(3)(iii) and (b)(1)(iii) are added, to read as follows:

§ 648.7 Recordkeeping and reporting requirements.

(a) * * *

(1) * * *

(i) All dealers issued a dealer permit under this part, with the exception of those utilizing the surf clam or ocean quahog dealer permit, must provide: Dealer name and mailing address; dealer permit number; name and permit number or name and hull number (USCG documentation number or state registration number, whichever is applicable) of vessels from which fish are landed or received; trip identifier for a trip from which fish are landed or received; dates of purchases; pounds by species (by market category, if applicable); price per pound by species (by market category, if applicable) or total value by species (by market category, if applicable); port landed; signature of person supplying the information; and any other information deemed necessary by the Regional Administrator. * * *

* * * * *

(2) * * *

(i) Federally permitted dealers, other than Atlantic herring dealers, purchasing quota-managed species not deferred from coverage by the Regional Administrator pursuant to paragraph (a)(2)(ii) of this section must submit, within the time period specified in paragraph (f) of this section, the following information, and any other information required by the Regional Administrator, to the Regional Administrator or to an official designee, via the IVR system established by the Regional Administrator: Dealer permit number; dealer code; pounds purchased, by species, other than Atlantic herring; reporting week in which species were purchased; and state of landing for each species purchased. * * *

* * * * *

(3) * * *

(iii) Atlantic herring processors, including processing vessels, must complete and submit all sections of the Annual Processed Products Report.

(b) * * *

(1) * * *

(iii) The owner or operator of a vessel described here must report catches (retained and discarded) of herring each week to an IVR system. The report shall include at least the following information, and any other information required by the Regional Administrator: Vessel identification, reporting week in which species are caught, pounds retained, pounds discarded, management area fished, and pounds of herring caught in each management area for the previous week. Weekly Atlantic herring catch reports must be submitted via the IVR system by midnight, Eastern time, each Tuesday for the previous week. Reports are required even if herring caught during the week has not yet been landed. This report does not exempt the owner or operator from other applicable reporting requirements of § 648.7.

(A) The owner or operator of any vessel issued a permit for Atlantic herring subject to the requirements specified by § 648.4(c)(2)(vi)(C) that is required by § 648.205 to have a VMS unit on board must submit an Atlantic herring catch report via the IVR system each week (including weeks when no herring is caught), unless exempted from this requirement by the Regional Administrator.

(B) An owner or operator of any vessel issued a permit for Atlantic herring that is not required by § 648.205 to have a VMS unit on board, or any vessel that catches herring in or from the EEZ, but catches ≥ 2,000 lb (907.2 kg) of Atlantic herring on any trip in a week, must submit an Atlantic herring catch report via the IVR system for that week as required by the Regional Administrator.

(C) Atlantic herring IVR reports are not required from Atlantic herring carrier vessels.

* * * * *

(f) * * *

(3) *At-sea purchasers, receivers, or processors.* All persons, except persons on Atlantic herring carrier vessels, purchasing, receiving, or processing any Atlantic herring, summer flounder, Atlantic mackerel, squid, butterfish, scup, or black sea bass at sea for landing at any port of the United States must submit information identical to that required by paragraphs (a)(1) or (a)(2) of this section, as applicable, and provide those reports to the Regional Administrator or designee on the same frequency basis.

* * * * *

8. In § 648.9, paragraphs (c)(1) and (f) are revised and paragraph (c)(2)(iii) is added to read as follows:

§ 648.9 VMS requirements.

* * * * *

(c) * * *

(1) Except as provided in paragraph (c)(2) of this section, or unless otherwise required by § 648.58(h), all required VMS units must transmit a signal indicating the vessel's accurate position at least every hour, 24 hours a day, throughout the year.

(2) * * *

(iii) Any VMS-equipped vessel with an Atlantic herring permit, unless required by other fishery regulations to have on board a fully operational VMS unit at all times, need not transmit a signal when the vessel is in port.

* * * * *

(f) *Access.* As a condition to obtaining a limited access scallop or multispecies permit, or an Atlantic herring permit, all vessel owners must allow NMFS, the USCG, and their authorized officers or designees access to the vessel's DAS data, if applicable, and location data obtained from its VMS unit, if required, at the time of or after its transmission to the vendor or receiver, as the case may be.

* * * * *

9. In § 648.11, the first sentence of paragraph (a) is revised to read as follows:

§ 648.11 At-sea sampler/observer coverage.

(a) The Regional Administrator may require any vessel holding any of the following permits to carry a NMFS-approved sea sampler/observer: Atlantic sea scallop, Atlantic herring, NE multispecies, monkfish, Atlantic mackerel, spiny dogfish, squid, butterfish, scup, bluefish, black sea bass, or a moratorium permit for summer flounder. * * *

* * * * *

10. In § 648.12, the first sentence of the introductory text is revised to read as follows:

§ 648.12 Experimental fishing.

The Regional Administrator may exempt any person or vessel from the requirements of subparts A (General Provisions), B (Atlantic Mackerel, Squid, and Butterfish Fisheries), D (Atlantic Sea Scallop Fishery), E (Atlantic Surf Clam and Ocean Quahog Fisheries), F (NE Multispecies and Monkfish Fisheries), G (Summer Flounder Fishery), H (Scup Fishery), I (Black Sea Bass Fishery), J (Atlantic Bluefish Fishery), K (Atlantic Herring Fishery), or L (Spiny Dogfish Fishery) of this part for the conduct of experimental fishing beneficial to the management of the resources or fishery managed under that subpart. * * *

* * * * *

11. In § 648.13, paragraph (f) is added to read as follows:

§ 648.13 Transfers at sea.

* * * * *

(f) *Atlantic herring.* Except for a person who purchases and/or receives Atlantic herring at sea for his own personal use as bait and who does not have purse seine, mid-water trawl, pelagic gillnet, sink gillnet, or bottom trawl gear on board, any person or vessel is prohibited from transferring, receiving, or attempting to transfer or receive any Atlantic herring taken from the EEZ, and any vessel issued an Atlantic herring permit is prohibited from transferring, receiving, or attempting to transfer or receive, Atlantic herring, unless the person or vessel complies with the following:

(1) The transferring and receiving vessels have been issued valid Atlantic herring permits and/or other applicable authorization, such as a letter of authorization from the Regional Administrator, to transfer or receive herring.

(2) The vessel does not transfer to a U.S. vessel, and a U.S. vessel does not receive, > 2,000 lb (907.2 kg) of herring per day in or from a management area closed to directed fishing for Atlantic herring.

(3) The vessel does not transfer herring in or from an area closed to directed fishing for Atlantic herring to an IWP or Joint Venture vessel.

(4) The vessel does not transfer Atlantic herring to a Canadian transshipment vessel that is permitted in accordance with Pub. L. 104-297 after the amount of herring transshipped equals the amount of the BT specified pursuant to § 648.200.

12. In § 648.14, paragraph (a)(103) is revised, and paragraphs (x)(10) and (bb) are added to read as follows:

§ 648.14 Prohibitions.

(a) * * *

(103) Sell, barter, trade, or transfer, or attempt to sell, barter, trade, or transfer, other than solely for transport, any Atlantic herring, multispecies, or monkfish, unless the dealer or transferee has a valid dealer permit issued under § 648.6. A person who purchases and/or receives Atlantic herring at sea for his own personal use as bait, and does not have purse seine, mid-water trawl, pelagic gillnet, sink gillnet, or bottom trawl gear on board, is exempt from the requirement to possess an Atlantic herring dealer permit.

* * * * *

(x) * * *

(10) *Atlantic herring.* All Atlantic herring retained or possessed on a vessel issued any permit under § 648.4 are deemed to have been harvested from the EEZ, unless the preponderance of all submitted evidence demonstrates that such Atlantic herring were harvested by a vessel fishing exclusively in state waters.

* * * * *

(bb) In addition to the general prohibitions specified in § 600.725 of this chapter and in paragraph (a) of this section, it is unlawful for any person to do any of the following:

(1) Fish for, possess, retain or land Atlantic herring, unless:

(i) The Atlantic herring are being fished for or were harvested in or from the EEZ by a vessel holding a valid Atlantic herring permit under this part, and the operator on board such vessel has been issued an operator permit that is on board the vessel; or

(ii) The Atlantic herring were harvested by a vessel not issued an Atlantic herring permit that was fishing exclusively in state waters; or

(iii) The Atlantic herring were harvested in or from the EEZ by a vessel engaged in recreational fishing; or

(iv) Unless otherwise specified in accordance with § 648.17.

(2) Operate, or act as an operator of, a vessel with an Atlantic herring permit, or a vessel fishing for or possessing Atlantic herring in or from the EEZ, unless the operator has been issued, and is in possession of, a valid operator permit.

(3) Purchase, possess, receive, or attempt to purchase, possess, or receive, as a dealer, or in the capacity of a

dealer, Atlantic herring that were harvested in or from the EEZ, without having been issued, and in possession of, a valid Atlantic herring dealer permit.

(4) Purchase, possess, receive, or attempt to purchase, possess, or receive, as a processor, or in the capacity of a processor, Atlantic herring from a fishing vessel with an Atlantic herring permit or from a dealer with an Atlantic herring dealer permit, without having been issued, and in possession of, a valid Atlantic herring processor permit.

(5) Sell, barter, trade, or otherwise transfer, or attempt to sell, barter, trade, or otherwise transfer, for a commercial purpose, any Atlantic herring, unless the vessel has been issued an Atlantic herring permit, or unless the Atlantic herring were harvested by a vessel without an Atlantic herring permit that fished exclusively in state waters.

(6) Purchase, possess, or receive, for a commercial purpose, or attempt to purchase, possess or receive, for a commercial purpose, Atlantic herring caught by a vessel without an Atlantic herring permit, unless the Atlantic herring were harvested by a vessel without an Atlantic herring permit that fished exclusively in state waters.

(7) Possess, transfer, receive, or sell, or attempt to transfer, receive, or sell 2,000 lb (907.2 kg) of Atlantic herring per trip, or land, or attempt to land > 2,000 lb (907.2 kg) of Atlantic herring per day in or from an area of the EEZ subject to restrictions pursuant to § 648.202(a).

(8) Possess, transfer, receive, or sell, or attempt to transfer, receive, or sell 2,000 lb (907.2 kg) of Atlantic herring per trip, or land, or attempt to land > 2,000 lb (907.2 kg) of Atlantic herring per day in or from state waters subject to restrictions pursuant to § 648.202(a), if the vessel has been issued a valid Atlantic herring permit.

(9) Transfer or attempt to transfer Atlantic herring to a Canadian transshipment vessel that is permitted in accordance with Pub. L. 104-297 after the amount of herring transshipped equals the amount of the BT specified pursuant to § 648.200.

(10) Transit an area of the EEZ that is subject to a closure to directed fishing for Atlantic herring or restrictions pursuant to § 648.202(a) with > 2,000 lb (907.2 kg) of herring on board, unless all fishing gear is stowed as specified by § 648.23(b).

(11) Catch, take, or harvest Atlantic herring in or from the EEZ with a U.S. vessel that exceeds the size limits specified in § 648.203.

(12) Process Atlantic herring caught in or from the EEZ in excess of the specification of USAP with a U.S. vessel that exceeds the size limits specified in § 648.203(b).

(13) Discard herring carcasses in the EEZ, or at sea if a federally-permitted vessel, after removing the roe.

(14) Catch, take, or harvest Atlantic herring in or from the EEZ for roe in excess of any allowed limit that may be established pursuant to § 648.204(b).

(15) Catch, take, or harvest Atlantic herring in or from the EEZ, unless equipped with an operable VMS unit if a vessel caught > 500 mt of Atlantic herring in the previous fishing year, or intends to catch > 500 mt of Atlantic herring in the current fishing year, as required by § 648.205(a).

(16) Catch, take, or harvest > 500 mt of Atlantic herring in or from the EEZ during the fishing year, unless equipped with an operable VMS unit as required by § 648.205(a).

(17) Receive Atlantic herring in or from the EEZ solely for transport, unless issued a letter of authorization from the Regional Administrator.

(18) Fail to comply with any of the requirements of a letter of authorization from the Regional Administrator.

13. Subpart K is added to read as follows:

PART 648—FISHERIES OF THE NORTHEASTERN UNITED STATES

Sec.

Subpart K—Management Measures for the Atlantic Herring Fishery

648.200 Specifications.
648.201 Management areas.
648.202 Total allowable catch (TAC) controls.
648.203 Vessel size/horsepower limits.
648.204 Herring roe restrictions.
648.205 VMS requirements.
648.206 Framework provisions.

§ 648.200 Specifications.

(a) The Atlantic Herring Plan Development Team (PDT) shall meet at least annually, but no later than July, with the Atlantic States Marine Fisheries Commission's (Commission) Atlantic Herring Plan Review Team (PRT) to develop and recommend the following specifications for consideration by the New England Fishery Management Council's Atlantic Herring Oversight Committee: Optimum yield (OY), domestic annual harvest (DAH), domestic annual processing (DAP), total foreign processing (JVPt), joint venture processing (JVP), internal waters processing (IWP), U.S. at-sea processing (USAP), border transfer (BT), total allowable level of foreign fishing (TALFF), and reserve (if any). The PDT and PRT shall also recommend the total allowable catch (TAC) for each management area and sub-area. Recommended specifications shall be presented to the New England Fishery Management Council (Council)

(b) *Guidelines.* As the basis for its recommendations under paragraph (a) of this section, the PDT shall review available data pertaining to: commercial and recreational catch data; current estimates of fishing mortality; stock status; recent estimates of recruitment; virtual population analysis results and other estimates of stock size; sea sampling and trawl survey data or, if sea sampling data are unavailable, length frequency information from trawl surveys; impact of other fisheries on herring mortality; and any other relevant information. The specifications recommended pursuant to paragraph (a) of this section must be consistent with the following:

(1) OY must be equal to or less than the allowable biological catch (ABC) minus an estimate of the expected Canadian NB fixed gear and GB herring catch, which shall not exceed 20,000 mt for the NB fixed gear harvest and 10,000 mt for the Canadian GB harvest.

(2) OY shall not exceed maximum sustainable yield (MSY), unless an OY that exceeds MSY in a specific year is consistent with a control rule that ensures the achievement of MSY and OY on a continuing basis; however, OY shall not exceed MSY prior to the 2001 fishing year.

(3) Factors to be considered in assigning an amount, if any, to the reserve shall include:

(i) Uncertainty and variability in the estimates of stock size and ABC;

(ii) Uncertainty in the estimates of Canadian harvest from the coastal stock complex;

(iii) The requirement to insure the availability of herring to provide controlled opportunities for vessels in other fisheries in the Mid-Atlantic and New England;

(iv) Excess U.S. harvesting capacity available to enter the herring fishery;

(v) Total world export potential by herring producer countries;

(vi) Total world import demand by herring consuming countries;

(vii) U.S. export potential based on expected U.S. harvests, expected U.S. consumption, relative prices, exchange rates, and foreign trade barriers;

(viii) Increased/decreased revenues to U.S. harvesters (with/without joint ventures);

(ix) Increased/decreased revenues to U.S. processors and exporters; and

(x) Increased/decreased U.S. processing productivity.

(4) Adjustments to TALFF, if any, will be made based on updated information relating to status of stocks, estimated and actual performance of domestic and foreign fleets, and other relevant factors.

(c) The Atlantic Herring Oversight Committee shall review the recommendations of the PDT and shall consult with the Commission's Herring Section. Based on these recommendations and any public comment received, the Herring Oversight Committee shall recommend to the Council appropriate specifications. The Council shall review these recommendations and, after considering public comment, shall recommend appropriate specifications to NMFS. NMFS shall review the recommendations, consider any comments received from the Commission and, on or about September 15, shall publish notification in the **Federal Register** proposing specifications and providing a 30-day public comment period. If the proposed specifications differ from those recommended by the Council, the reasons for any differences shall be clearly stated and the revised specifications must satisfy the criteria set forth in this section.

(d) On or about November 1 of each year, NMFS shall make a final determination concerning the specifications for Atlantic herring. Notification of the final specifications and responses to public comments shall be published in the **Federal Register.** If the final specification amounts differ from those recommended by the Council, the reason(s) for the difference(s) must be clearly stated and the revised specifications must be consistent with the criteria set forth in paragraph (b) of this section. The previous year's specifications shall remain effective unless revised through the specification process. NMFS shall issue notification in the **Federal Register** if the previous year's specifications will not be changed.

(e) *In-season adjustments.* (1) The specifications and TACs established pursuant to this section may be adjusted by NMFS, after consulting with the Council, during the fishing year by publishing notification in the **Federal Register** stating the reasons for such action and providing an opportunity for prior public comment. Any adjustments must be consistent with the Atlantic Herring FMP objectives and other FMP provisions.

(2) If a total allowable catch reserve (TAC reserve) is specified for an area, NMFS may make any or all of that TAC reserve available to fishers after consulting with the Council. NMFS shall propose any release of the TAC reserve in the **Federal Register** and provide an opportunity for public comment. After considering any comments received, any release of the TAC reserve shall be announced through notification in the **Federal Register.**

§ 648.201 Management areas.

Three management areas, which may have different management measures, are established for the Atlantic herring fishery. Management Area 1 is subdivided into inshore and offshore sub-areas. The management areas are defined as follows:

(a) *Management Area 1 (Gulf of Maine)*: All U.S. waters of the Gulf of Maine (GOM) north of a line extending from the eastern shore of Monomoy Island at 41° 35' N. lat., eastward to a point at 41° 35' N. lat., 69° 00' W. long., thence northeasterly to a point along the Hague Line at 42° 53'14'' N. lat., 67° 44'35'' W. long., thence northerly along the Hague Line to the U.S.-Canadian border, to include state and Federal waters adjacent to the States of Maine, New Hampshire, and Massachusetts. Management Area 1 is divided into Area 1A (inshore) and Area 1B (offshore). The line dividing these areas is described by the following coordinates:

AREA 1

N. Latitude	W. Longitude
41° 58'	70° 00' at Cape Cod shoreline
42°38.4'	70° 00'
42° 53'	69° 40'
43°12'	69° 00'
43°40'	68° 00'
43° 58'	67° 22' (the U.S.-Canada Maritime Boundary)
(1)	(1)

[1]Northward along the irregular U.S.-Canada maritime boundary to the shoreline.

(b) *Management Area 2 (South Coastal Area)*: All waters west of 69° 00' W. long. and south of 41° 35' N. lat., to include state and Federal waters adjacent to the States of Massachusetts, Rhode Island, Connecticut, New York, New Jersey, Delaware, Maryland, Virginia, and North Carolina.

(c) *Management Area 3 (Georges Bank)*: All U.S. waters east of 69° 00' W. long. and southeast of the line that runs from a point at 69° 00' W. long. and 41° 35' N. lat., northeasterly to the Hague Line at 67° 44'35'' W. long. and 42° 53'14'' N. lat.

§ 648.202 Total allowable catch (TAC) controls.

(a) If NMFS determines that catch will reach or exceed 95 percent of the TAC in a management area before the end of the fishing year, NMFS shall prohibit a vessel, beginning the date the catch is projected to reach 95 percent of the TAC, from fishing for, possessing, catching, transferring, or landing > 2,000 lb (907.2 kg) of Atlantic herring per trip and/or > 2,000 lb (907.2 kg) of Atlantic herring per day in such area pursuant to paragraph (e) of this section, except as provided in paragraphs (c) and (d) of this section. These limits shall be enforced based on a calendar day, without regard to the length of the trip.

(b) NMFS may raise the percent of the TAC that triggers imposition of the 2,000-lb (907.2-kg) limit specified in paragraph (a) of this section through the annual specification process described in § 648.200. Any lowering of the percent of the TAC that triggers the 2,000-lb (907.2-kg) limit specified in paragraph (a) of this section must be accomplished through the framework adjustment or amendment processes.

(c) A vessel may transit an area that is limited to the 2,000-lb (907.2-kg) limit specified in paragraph (a) of this section with > 2,000 lb (907.2 kg) of herring on board, providing all fishing gear is stowed and not available for immediate use as required by § 648.23(b).

(d) A vessel may land in an area that is limited to the 2,000-lb (907.2-kg) limit specified in paragraph (a) of this section with > 2,000 lb (907.2 kg) of herring on board, providing such herring were caught in an area or areas not subject to the 2,000-lb (907.2-kg) limit specified in paragraph (a) of this section and providing all fishing gear is stowed and not available for immediate use as required by § 648.23(b).

(e) NMFS shall implement fishing restrictions as specified in paragraph (a) of this section by publication of a notification in the **Federal Register**, without further opportunity for public comment.

§ 648.203 Vessel size/horsepower limits.

(a) To catch, take, or harvest Atlantic herring, a U.S. vessel issued an Atlantic herring permit must not exceed the specifications contained in § 648.4(a)(10)(i)(B). If any such vessel exceeds such specifications, its permit automatically becomes invalid and the vessel may not catch, take, or harvest Atlantic herring, as applicable, in or from the EEZ.

(b) A U.S. vessel issued an Atlantic herring processor permit may receive and process herring, providing such vessel is ≤ 165 feet (50.3 m) in length

overall, and ≤ 750 GRT (680.4 mt). A U.S. vessel that is > 165 feet (50.3 m) in length overall, or > 750 GRT (680.4 mt), may only receive and process herring provided that the vessel is issued an ''Atlantic herring processor permit'' described in § 648.4(a)(10)(ii) and that the total amount of herring received or processed by such vessel does not exceed the USAP established in accordance with § 648.200.

§ 648.204 Herring roe restrictions.

(a) Retention of herring roe. Herring may be processed for roe, provided that the carcasses of the herring are not discarded at sea.

(b) Limits on the harvest of herring for roe. The Council may recommend to NMFS a limit on the amount of herring that may be harvested for roe to be implemented by framework adjustment in accordance with § 648.206.

§ 648.205 VMS requirements.

(a) Except for Atlantic herring carrier vessels, the owner or operator of any vessel issued an Atlantic herring permit that caught or landed > 500 mt of Atlantic herring in the previous fishing year, or intends to catch or land, or catches or lands > 500 mt of Atlantic herring in the current fishing year, must have an operable VMS unit installed on board that meets the requirements of § 648.9. The VMS unit must be certified, installed on board, and operable before the vessel may begin fishing.

(b) A vessel owner or operator, except an owner or operator of an Atlantic herring carrier vessel, who intends to catch and land > 500 mt of Atlantic herring must declare such intention to the Regional Administrator prior to obtaining an Atlantic herring fishing permit for the fishing year.

(c) Except for Atlantic herring carrier vessels, the owner or operator of a vessel is prohibited from landing > 500 mt of Atlantic herring caught in or from the EEZ during a fishing year, unless in compliance with § 648.205(b).

§ 648.206 Framework provisions.

(a) *Annual review.* The Herring PDT, in consultation with the Commission's PRT, shall review the status of the stock and the fishery. The PDT shall review available data pertaining to commercial and recreational catches, current estimates of fishing mortality, stock status, estimates of recruitment, virtual population analysis, and other estimates of stock size, sea sampling and trawl survey data or, if sea sampling data are unavailable, length frequency information from trawl surveys, the impact of other fisheries on herring mortality, and any other relevant information. Based on this review, the PDT shall report to the Council's Herring Oversight Committee no later than July, any necessary adjustments to the management measures and recommendations for the Atlantic herring annual specifications. The PDT, in consultation with the PRT, shall recommend the specifications, as well as an estimated TAC, as required by § 648.200, for the following fishing year.

(b) Based on these recommendations, the Herring Oversight Committee shall further recommend to the Council any measures necessary to insure that the annual specifications shall not be exceeded. The Council shall review these recommendations and any public comment received and, after consulting with the Commission, shall recommend appropriate specifications to NMFS, as described in § 648.200. Any suggested revisions to management measures may be implemented through the framework process or through an amendment to the FMP.

(c) *Framework adjustment process.* In response to the annual review, or at any other time, the Council may initiate action to add or adjust management measures if it finds that action is necessary to meet or be consistent with the goals and objectives of the Atlantic herring FMP, or to address gear conflicts as defined under § 600.10 of this chapter.

(1) *Adjustment process.* After a management action has been initiated, the Council shall develop and analyze appropriate management actions over the span of at least two Council meetings. The Council may delegate authority to the Herring Oversight Committee to conduct an initial review of the options being considered. The oversight committee shall review the options and relevant information, consider public comment, and make a recommendation to the Council.

(2) After the first framework meeting, the Council may refer the issue back to the Herring Oversight Committee for further consideration, make adjustments to the measures that were proposed, or approve of the measures and begin developing the necessary documents to support the framework adjustments. If the Council approves the proposed framework adjustments, the Council shall identify, at this meeting, a preferred alternative and/or identify the possible alternatives.

(3) A framework document shall be prepared that discusses and shows the impacts of the alternatives. It shall be available to the public prior to the second or final framework meeting.

(4) After developing management actions and receiving public testimony, the Council shall make a recommendation to NMFS. The Council's recommendation must include supporting rationale and, if changes to the management measures are recommended, an analysis of impacts and a recommendation to NMFS on whether to issue the management measures as a final rule. If the Council recommends that the management measures should be issued as a final rule, the Council must consider at least the following factors and provide support and analysis for each factor considered:

(i) Whether the availability of data on which the recommended management measures are based allows for adequate time to publish a proposed rule, and whether regulations have to be in place for an entire harvest/fishing season.

(ii) Whether there has been adequate notice and opportunity for participation by the public and members of the affected industry in the development of the Council's recommended management measures.

(iii) Whether there is an immediate need to protect the resource or to impose management measures to resolve gear conflicts.

(iv) Whether there will be a continuing evaluation of management measures adopted following their implementation as a final rule.

(5) If the Council's recommendation to NMFS includes adjustments or additions to management measures, after reviewing the Council's recommendation and supporting information NMFS may:

(i) Concur with the Council's recommended management measures and determine that the recommended management measures should be published as a final rule in the **Federal Register** based on the factors specified in paragraphs (c)(4)(i), (ii), (iii) and (iv) of this section.

(ii) Concur with the Council's recommendation and determine that the recommended management measures should be first published as a proposed rule in the **Federal Register**. After additional public comment, if NMFS concurs with the Council's recommendation, the measures shall be issued as a final rule in the **Federal Register**.

(iii) If NMFS does not concur, the Council shall be notified in writing of the reasons for the non-concurrence.

(d) Possible framework adjustment measures. Measures that may be changed or implemented through framework action include:

(1) Management area boundaries or additional management areas;

(2) Size, timing, or location of new or existing spawning area closures;
(3) Closed areas other than spawning closures;
(4) Restrictions in the amount of fishing time;
(5) A days-at-sea system;
(6) Adjustments to specifications;
(7) Adjustments to the Canadian catch deducted when determining specifications;
(8) Distribution of the TAC;
(9) Gear restrictions (such as mesh size, etc.) or requirements (such as bycatch-reduction devices, etc.);
(10) Vessel size or horsepower restrictions;
(11) Closed seasons;
(12) Minimum fish size;
(13) Trip limits;
(14) Seasonal, area, or industry sector quotas;
(15) Measures to describe and identify essential fish habitat (EFH), fishing gear management measures to protect EFH, and designation of habitat areas of particular concern within EFH;
(16) Measures to facilitate aquaculture, such as minimum fish sizes, gear restrictions, minimum mesh sizes, possession limits, tagging requirements, monitoring requirements, reporting requirements, permit restrictions, area closures, establishment of special management areas or zones, and any other measures included in the FMP;
(17) Changes to the overfishing definition;
(18) Vessel monitoring system requirements;
(19) Limits or restrictions on the harvest of herring for specific uses;
(20) Quota monitoring tools, such as vessel, operator, or dealer reporting requirements;
(21) Permit and vessel upgrading restrictions;
(22) Implementation of measures to reduce gear conflicts, such as mandatory monitoring of a radio channel by fishing vessels, gear location reporting by fixed gear fishermen, mandatory plotting of gear by mobile fishermen, standards of operation when conflict occurs, fixed gear marking or setting practices; gear restrictions for certain areas, vessel monitoring systems, restrictions on the maximum number of fishing vessels, and special permitting conditions;
(23) Limited entry or controlled access system;
(24) Specification of the amount of herring to be used for roe; and
(5) Any other measure currently included in the FMP.

(e) *Emergency action.* Nothing in this section is meant to derogate from the authority of the Secretary to take emergency action under section 305(e) of the Magnuson-Stevens Act.

[FR Doc. 00–31220 Filed 12–8–00; 8:45 am]
BILLING CODE 3510–22–S

DEPARTMENT OF COMMERCE

National Oceanic and Atmospheric Administration

50 CFR Part 648

[Docket No. 000105004–0260–02 ;I.D. 120400A]

RIN 0648–AI78

Fisheries of the Northeastern United States; Atlantic Herring Fisheries; 2000 Specifications; Adjustment; Closure

AGENCY: National Marine Fisheries Service (NMFS), National Oceanic and Atmospheric Administration (NOAA), Commerce.

ACTION: Inseason adjustment of the 2000 Atlantic herring specifications; closure of Area 1A.

SUMMARY: NMFS adjusts the 2000 annual specifications for the Atlantic herring fishery including total joint venture processing (JVPt), joint venture processing (JVP), internal waters processing (IWP), U.S. at–sea processing (USAP), and total allowable catch (TAC) for Areas 1A and 1B. The intent is to reapportion allowable catches of herring within the fishery sectors and areas to allow for the achievement of the objectives of the Fishery Management Plan for Atlantic Herring (FMP). NMFS also announces that the directed fishery for Atlantic herring in Area 1A in the exclusive economic zone (EEZ) will be closed.

DATES: The closure of Area 1A is effective December 14, 2000 through 0001 hours, January 1, 2001. After 0001 hours, December 14, 2000, vessels may not fish for, possess, catch, transfer, or land more than 2,000 lb (907.2 kg) of Atlantic herring per trip and per calendar day. Comments on the inseason adjustment must be received by January 10, 2001.

ADDRESSES: Comments on the inseason adjustment should be sent to Patricia A. Kurkul, Regional Administrator, NMFS, Northeast Regional Office, 1 Blackburn Drive, Gloucester, MA 01930. Mark on the outside of the envelope ''Comments on Inseason Adjustment of 2000 Atlantic herring specifications.'' Comments may also be sent via facsimile (fax) to (978) 281–9371. Comments will not be accepted if submitted via e–mail or the Internet.

FOR FURTHER INFORMATION CONTACT: Myles Raizin, Fishery Policy Analyst, 978–281–9288, fax at (978) 281–9135.

SUPPLEMENTARY INFORMATION:

Inseason Adjustment

The inseason adjustment adjusts the 2000 specifications for the Atlantic herring fishery by transferring 5,000 mt specified for JVP and 15,000 mt specified for IWP to USAP, and transferring 15,000 mt of Atlantic herring from the Area 1B TAC to the Area 1A TAC. This action is consistent with the FMP.

JVP is the amount of herring purchased over the side from U.S. vessels and processed by foreign vessels in the EEZ; IWP is the amount of herring purchased over the side from U.S. vessels and processed by foreign vessels at anchor in state waters; JVPt is the sum of JVP and IWP; and USAP is the amount of herring purchased over the side from U.S. vessels and processed in the EEZ by U.S. vessels of the United States that are larger than 165 ft (50.3 m) in length overall or greater than 750 gross registered tons (680.4 mt). For fishing year 2000, JVP allocations were specified for Areas 2 and 3.

Regulations at § 648.200(e) allow NMFS, after consulting with the New England Fishery Management Council (Council), to adjust annual specifications for the Atlantic herring fishery during the fishing year by publishing notification in the **Federal Register** stating the reasons for such action and providing an opportunity for public comment. Any adjustments must be consistent with the FMP objectives and other FMP provisions.

2000 Herring Specifications

The FMP, which was submitted for Secretarial review by the Council on March 8, 1999, and partially approved on October 27, 1999, contains specifications for the 1999 fishery. The 2000 specifications are unchanged from those designated as 1999 specifications in the FMP (see Table 1). The FMP and the 2000 fishery specifications were implemented through a final rule published in the final rule section of this edition of the **Federal Register**.

TABLE 1. 2000 ATLANTIC HERRING SPECIFICATIONS (UNADJUSTED)

Specification	Recommended Amount (mt)
ABC	300,000
OY	224,000
DAH	224,000
DAP	180,000
USAP	0
BT	4,000
JVPt	40,000
JVP–Area 2	10,000
JVP–Area 3	5,000
IWP	25,000
Reserve	0
TAC–Area 1A	45,000
TAC–Area 1B	25,000
TAC–Area 2	50,000 (54,000 TAC reserve)
TAC–Area 3	50,000

Since submission of the FMP, the Council has received new information that has prompted the Council to reconsider the 2000 specifications and request NMFS to adjust those specifications for the remainder of the 2000 fishery. The adjusted specifications are presented in Table 2 and discussed here.

TABLE 2. 2000 ATLANTIC HERRING SPECIFICATIONS (ADJUSTED)

Specification	Recommended Amount (mt)
ABC	300,000
OY	224,000
DAH	224,000
DAP	180,000
USAP	20,000
BT	4,000
JVPt	20,000
JVP–Area 2 and Area 3	10,000
IWP	10,000
Reserve	0
TAC–Area 1A	60,000
TAC–Area 1B	10,000
TAC–Area 2	50,000 (54,000 TAC reserve)
TAC–Area 3	50,000

Adjustment to the TAC Specification for Herring in Areas 1A and 1B

Area 1A and 1B together comprise Area 1, also referred to as the Gulf of Maine (GOM) stock component of the herring fishery. In preparing the FMP and specifications for the 1999 fishery, the Council received management advice from Stock Assessment Workshop 27 that cautioned that any increase in catch in the herring fishery should not come from Area 1. Information available at that time indicated that the historic fishery harvested, on average, approximately 70,000 mt per year from Area 1. Therefore, the Council established a TAC of 70,000 mt for Area 1, consistent with the scientific advice.

The 2000 specifications for herring contained in the FMP divided the 70,000 mt Area 1 TAC into a TAC of 45,000 mt in Area 1A and 25,000 mt in Area 1B. In setting the Area 1 TAC in the FMP, the Council noted that estimated landings from the area were relatively low in 1998 and early 1999. Area 1A landings for 1998 totaled only 43,586 mt, down from 67,608 mt in 1997. Since the majority of herring spawning occurs in Area 1A, the Council reacted to the reduction in landings in that area by specifying a TAC of only 45,000 mt TAC, to afford more protection for the spawning stock, noting that there was uncertainty as to whether the decline in 1998 was due to a drastic change in stock size or simply due to a change in availability. However, landings from Area 1A rebounded to an estimated 63,195 mt in 1999, causing the Council to reconsider the appropriate TAC for Area 1A. The Council concluded that the reduction in landings in 1998 was not a result of low herring abundance, but only in availability of fish in Area 1A in 1998. Therefore, the Council determined that there was no biological risk in increasing the TAC in Area 1A to 60,000 mt, while reducing the TAC in Area 1B to 10,000 mt. In addition, the Council noted in its request that any conservation concerns regarding spawning potential for Area 1A herring are further alleviated by the Atlantic States Marine Fisheries Commission's decision to close sub–areas in Area 1A to directed fishing during peak spawning periods.

The Council determined that the maintenance of a 45,000–mt TAC in Area 1A for the 2000 fishery could result in an unnecessary and unintended adverse economic impact, since TAC in Area 1A in 2000 would be approximately 23,000 mt less than estimated 1999 landings. In Table E.58 of the Regulatory Impact Review (RIR) accompanying the FMP, the Council estimated that a 60,000–mt TAC in Area 1A, relative to 1997 landings, would yield a gain in total revenues of $121,275, while a TAC of 45,000 mt would yield a loss in total revenue of $1,863,225, relative to 1997.

Adjustment to JVP and USAP

In July 1999, the Council approved recommendations for herring specifications for the 2000 fishery and subsequently submitted those recommendations to NMFS with an accompanying environmental analysis and RIR. The public was invited to comment on those recommendations at meetings of the Herring Committee and Council. At that time, the Council assumed that final regulations implementing the FMP would be effective prior to the beginning of the 2000 fishing year. However, in the final rule implementing the FMP, NMFS extended the 1999 specifications approved in the FMP to the 2000 fishery. NMFS informed the Council that its submission would be considered as an adjustment to the 2000 specifications, once the final rule implementing the FMP was published.

The 2000 specifications implemented by the FMP set USAP at 0 mt, JVPt at 40,000 mt, JVP at 15,000 mt, and IWP at 25,000 mt. In its submission, the Council recommended an adjustment that transfers 20,000 mt from JVPt, including 5,000 mt from JVP and 15,000 mt from IWP, to USAP, resulting in a USAP of 20,000 mt, a JVPt of 20,000 mt, and JVP and IWP of 10,000 mt each. In addition, the 10,000 mt specification of JVP now reflects the combined allocation in Areas 2 and 3, whereas, the 2000 specifications allocated 5,000 mt to Area 2 and 10,000 mt to Area 3.

There are currently no large U.S. vessels processing herring at sea in Areas 1, 2, or 3. However, the Council determined that capacity exists to process 20,000 mt. The Council does not want to deprive large U.S. vessels of the opportunity to accept herring over the side and process it at sea; large foreign boats have the potential to do this under joint venture arrangements. Specification of USAP is consistent with an objective of the FMP that directs the Council to adopt measures that would maximize domestic use and encourage value–added product utilization.

Closure of Area 1A

The regulations at 50 CFR 648.202 require NMFS to close, by notification action, the directed Atlantic herring fishery in any of the four management areas designated in the FMP, if the harvest of Atlantic herring is projected to reach 95 percent of the TAC allocated to that area. NMFS determined, based on available data, that 95 percent of the adjusted Area 1A TAC of 60,000 mt has been harvested. Therefore, NMFS

announces that the directed fishery for Atlantic herring in Area 1A in the EEZ will be closed. The closure of Area 1A is effective December 14, 2000 through 0001 hours, January 1, 2001. After 0001 hours, December 14, 2000, vessels may not fish for, possess, catch, transfer, or land more than 2,000 lb (907.2 kg) of Atlantic herring per trip. In addition, vessels may not land more than one trip or 2,000 lb (907.2 kg) of Atlantic herring per calendar day. Vessels may transit Area 1A with more than 2,000 lb (907.2 kg) of herring on board providing all fishing gear is stowed and not available for immediate use as required by § 648.23(b).

Classification

This action is authorized by 50 CFR part 648 and is exempt from review under Executive Order 12866.

Authority: 16 U.S.C. 1801 *et seq.*

Dated: December 4, 2000.

Richard W. Surdi,

Acting Director, Office of Sustainable Fisheries, National Marine Fisheries Service.

[FR Doc. 00–31371 Filed 12–8–00; 8:45 am]

BILLING CODE: 3510–22–S

Federal Register

Monday,
December 11, 2000

Part V

Department of Transportation

Federal Motor Carrier Safety Administration

Qualification of Drivers; Exemption Applications; Vision; Notice

DEPARTMENT OF TRANSPORTATION

Federal Motor Carrier Safety Administration

Qualification of Drivers; Exemption Applications; Vision

AGENCY: Federal Motor Carrier Safety Administration (FMCSA), DOT.

ACTION: Notice of denials.

SUMMARY: The FMCSA is publishing the names of persons denied exemptions from the vision standard in 49 CFR 391.41(b)(10) and the reasons for the denials.

FOR FURTHER INFORMATION CONTACT: For information about the applications addressed in this notice, Ms. Teresa Doggett, Office of Bus and Truck Standards and Operations, MC-PSD, (202) 366–2990; for information about legal issues related to this notice, Mr. Joe Solomey, Office of the Chief Counsel, (202) 366–1374, FMCSA, 400 Seventh Street, SW., Washington, D.C. 20590–0001. Office hours are from 7:45 a.m. to 4:15 p.m., e.t., Monday through Friday, except Federal holidays.

SUPPLEMENTARY INFORMATION: The Secretary of Transportation (Secretary) has the authority under 49 U.S.C. 31502 and 31136 to establish standards for physical qualifications that must be met by commercial motor vehicle drivers in interstate commerce. These standards are published in Part 391 of the Federal Motor Carrier Safety Regulations. The history and delegation of authority to the Federal Motor Carrier Safety Administration (FMCSA) was published in the **Federal Register** on January 4, 2000 (65 FR 220).

Background

On June 9, 1998, the FHWA's waiver authority changed with enactment of the Transportation Equity Act for the 21st Century (TEA–21), Public Law 105–178, 112 Stat. 107. Section 4007 of TEA–21 amended the waiver provisions of 49 U.S.C. 31136(e) and 31315 to change the standard for evaluating waiver requests, to distinguish between a waiver and an exemption, and to establish term limits for both. Under revised section 31136(e), the FMCSA may grant a waiver for a period of up to 3 months or an exemption for a renewable 2-year period.

The amendments to 49 U.S.C. 31136(e) also changed the criteria for exempting a person from application of a regulation. Previously an exemption was appropriate if it was consistent with the public interest and the safe operation of CMVs. Now the FMCSA may grant an exemption if it finds ''such exemption would likely achieve a level of safety that is equivalent to, or greater than, the level that would be achieved absent such exemption.'' According to the legislative history, the Congress changed the statutory standard to give the agency greater discretion to consider exemptions. The previous standard was judicially construed as requiring an advance determination that absolutely no reduction in safety would result from an exemption. The Congress revised the standard to require that an ''equivalent'' level of safety be achieved by the exemption.

The FMCSA individually evaluated 247 exemption requests on their merits, as required by the decision in *Rauenhorst* v. *United States Department of Transportation, Federal Highway Administration,* 95 F. 3d. 715 (8th Cir. 1996), and determined that the applicants do not satisfy the criteria established to demonstrate that granting the exemptions is likely to achieve an equal or greater level of safety than exists without the exemption. Each applicant has, prior to this notice, received a letter of final disposition on his/her individual exemption request. Those decision letters fully outlined the basis for the denial and constitute final agency action. The list published today summarizes the agency's recent denials as required under 49 U.S.C. 31315(b)(4) by periodically publishing names and reason for denials.

Two hundred and six applicants lacked sufficient recent driving experience over the past three years. Thirteen applicants lacked at least three years of experience driving a commercial motor vehicle with their respective vision deficiencies. Two applicants had no experience driving a commercial motor vehicle. Five applicants were convicted of moving violations in conjunction with accidents. An applicant for an exemption cannot be involved in an accident for which he or she received a citation for a moving violation. Two applicants could not qualify for the exemption because they were convicted of three speeding violations in a three-year period, thus exceeding the two speeding violation maximum in a three-year period to qualify for the vision exemption. Two applicants had their licenses suspended during the three-year period and, therefore, could not qualify for the exemption. Two applicants did not qualify for the vision exemption because, in addition to the vision deficiency, they have other disqualifying medical conditions, and cannot meet the physical qualifications standards found at 49 CFR 391.41. One applicant did not have sufficient peripheral vision in the better eye to qualify for an exemption. Fourteen applicants did not qualify for the exemption because they meet the vision standards at 49 CFR 391.41(b)(10).

Summary of Causes for Not Granting Exemptions

The FMCSA has denied the following petitions for exemption from the vision standard in 49 CFR 391.41(b)(10). In accordance with 49 U.S.C. 31315(b)(4) and 31136(e), the agency is publishing the names of the applicants and the reasons for not granting exemptions.

1. Darryl P. Aalvik

Mr. Aalvik does not have sufficient driving experience over the past 3 years under normal highway operating conditions that would serve as an adequate predictor of future safe performance.

2. Raymond Albernaz

Mr. Albernaz does not have sufficient driving experience over the past 3 years under normal highway operating conditions that would serve as an adequate predictor of future safe performance.

3. Jesse D. Alligood

Mr. Alligood does not have sufficient driving experience over the past 3 years under normal highway operating conditions that would serve as an adequate predictor of future safe performance.

4. Roberto E. Alvarado

Mr. Alvarado has no experience operating a commercial motor vehicle and therefore presented no evidence from which the FMCSA can conclude that granting the exemption is likely to achieve a level of safety equal to that existing without the exemption.

5. Tracy Ammons

Mr. Ammons does not have sufficient driving experience over the past 3 years under normal highway operating conditions that would serve as an adequate predictor of future safety performance.

6. Mike Anderson

Mr. Anderson does not have 3 years of experience driving a commercial motor vehicle with his vision deficiency.

7. Melvin R. Athey, Jr.

Mr. Athey does not have sufficient driving experience over the past 3 years under normal highway operating conditions that would serve as an adequate predictor of future safe performance.

8. Doug Aulbach

Mr. Aulbach does not have sufficient driving experience over the past 3 years under normal highway operating conditions that would serve as an adequate predictor of future safe performance.

9. Richard M. Ault

Mr. Ault does not have sufficient driving experience over the past 3 years under normal highway operating conditions that would serve as an adequate predictor of future safe performance.

10. John W. Badgley

Mr. Badgley does not have sufficient driving experience over the past 3 years under normal highway operating conditions that would serve as an adequate predictor of future safe performance.

11. Stanley C. Bailey

Mr. Bailey does not have sufficient driving experience over the past 3 years under normal highway operating conditions that would serve as an adequate predictor of future safe performance.

12. John E. Baker

Mr. Baker does not have sufficient driving experience over the past 3 years under normal highway operating conditions that would serve as an adequate predictor of future safe performance.

13. William H. Ballew

Mr. Ballew does not have sufficient driving experience over the past 3 years under normal highway operating conditions that would serve as an adequate predictor of future safe performance.

14. Michael L. Balmer

Mr. Balmer does not have sufficient driving experience over the past 3 years under normal highway operating conditions that would serve as an adequate predictor of future safe performance.

15. Bobby Balusek, Sr.

Mr. Balusek does not have sufficient driving experience over the past 3 years under normal highway operating conditions that would serve as an adequate predictor of future safe performance.

16. Timothy D. Barger

Mr. Barger does not have sufficient driving experience over the past 3 years under normal highway operating conditions that would serve as an adequate predictor of future safe performance.

17. Ronald Becklund

Mr. Becklund does not have sufficient driving experience over the past 3 years under normal highway operating conditions that would serve as an adequate predictor of future safe performance.

18. James J. Belfiore

Mr. Belfiore does not have sufficient driving experience over the past 3 years under normal highway operating conditions that would serve as an adequate predictor of future safe performance.

19. Martin Bellcour

Mr. Bellcour does not have 3 years recent experience driving a commercial motor vehicle with his vision deficiency.

20. Donald Bersano

Mr. Bersano does not have sufficient driving experience over the past 3 years under normal highway operating conditions that would serve as an adequate predictor of future safe performance.

21. Paul D. Berube

Mr. Berube does not have sufficient driving experience over the past 3 years under normal highway operating conditions that would serve as an adequate predictor of future safe performance.

22. Walter E. Bible

Mr. Bible does not have sufficient driving experience over the past 3 years under normal highway operating conditions that would serve as an adequate predictor of future safe performance.

23. John M. Bigler

Mr. Bigler does not have sufficient driving experience over the past 3 years under normal highway operating conditions that would serve as an adequate predictor of future safe performance.

24. William Bonivich

Mr. Bonivich does not have sufficient driving experience over the past 3 years under normal highway operating conditions that would serve as an adequate predictor of future safe performance.

25. Allen G. Bors

Mr. Bors does not have sufficient driving experience over the past 3 years under normal highway operating conditions that would serve as an adequate predictor of future safe performance.

26. Claude Bowden

Mr. Bowden does not have sufficient driving experience over the past 3 years under normal highway operating conditions that would serve as an adequate predictor of future safe performance.

27. Howard A. Bradeen

Mr. Bradeen does not have sufficient driving experience over the past 3 years under normal highway operating conditions that would serve as an adequate predictor of future safe performance.

28. Russell Bradshaw

Mr. Bradshaw does not have sufficient driving experience over the past 3 years under normal highway operating conditions that would serve as an adequate predictor of future safe performance.

29. Joe C. Briones

Mr. Briones does not have sufficient driving experience over the past 3 years under normal highway operating conditions that would serve as an adequate predictor of future safe performance.

30. William R. Broman

Mr. Broman does not have sufficient driving experience over the past 3 years under normal highway operating conditions that would serve as an adequate predictor of future safe performance.

31. Andrew E. Brown

Mr. Brown does not have sufficient driving experience over the past 3 years under normal highway operating conditions that would serve as an adequate predictor of future safe performance.

32. Anthony D. Brown

Mr. Brown does not have sufficient driving experience over the past 3 years under normal highway operating conditions that would serve as an adequate predictor of future safe performance.

33. Richard D. Brown

Mr. Brown does not have sufficient driving experience over the past 3 years under normal highway operating conditions that would serve as an adequate predictor of future safe performance.

34. Saul Brown

Mr. Brown does not have sufficient driving experience over the past 3 years

under normal highway operating conditions that would serve as an adequate predictor of future safe performance.

35. Robert J. Bruce

Mr. Bruce does not have sufficient driving experience over the past 3 years under normal highway operating conditions that would serve as an adequate predictor of future safe performance.

36. Franklin Brume

Mr. Brume meets the vision requirements at 49 CFR 391.41(b)(10). According to an exam, his corrected visual acuity is 20/20 in the right eye and 20/25 in the left eye. He does not need a vision exemption.

37. Charles Buller

Mr. Buller does not have sufficient driving experience over the past 3 years under normal highway operating conditions that would serve as an adequate predictor of future safe performance.

38. Clifford Burnside

Mr. Burnside does not have 3 years recent experience driving a commercial motor vehicle with his vision deficiency.

39. Joseph Cameron

Mr. Cameron does not have sufficient driving experience over the past 3 years under normal highway operating conditions that would serve as an adequate predictor of future safe performance.

40. Timothy Campo

Mr. Campo does not have sufficient driving experience over the past 3 years under normal highway operating conditions that would serve as an adequate predictor of future safe performance.

41. Bobby R. Carroll

Mr. Carroll does not have sufficient driving experience over the past 3 years under normal highway operating conditions that would serve as an adequate predictor of future safe performance.

42. Corey J. Catt

Mr. Catt does not have sufficient driving experience over the past 3 years under normal highway operating conditions that would serve as an adequate predictor of future safe performance.

43. William J. Caudill

Mr. Caudill does not have sufficient driving experience over the past 3 years under normal highway operating conditions that would serve as an adequate predictor of future safe performance.

44. Charles R. Chambers

Mr. Chambers does not have sufficient driving experience over the past 3 years under normal highway operating conditions that would serve as an adequate predictor of future safe performance.

45. Al Chance

Mr. Chance does not have sufficient driving experience over the past 3 years under normal highway operating conditions that would serve as an adequate predictor of future safe performance.

46. John D. Chaney

Mr. Chaney does not have sufficient driving experience over the past 3 years under normal highway operating conditions that would serve as an adequate predictor of future safe performance.

47. Jay A. Chapman

Mr. Chapman does not have sufficient driving experience over the past 3 years under normal highway operating conditions that would serve as an adequate predictor of future safe performance.

48. James Christian

Mr. Christian does not have sufficient driving experience over the past 3 years under normal highway operating conditions that would serve as an adequate predictor of future safe performance.

49. Stanley Christman

Mr. Christman does not have sufficient driving experience over the past 3 years under normal highway operating conditions that would serve as an adequate predictor of future safe performance.

50. Edward Cieslik

Mr. Cieslik does not have sufficient driving experience over the past 3 years under normal highway operating conditions that would serve as an adequate predictor of future safe performance.

51. Anthony T. Cinque

Mr. Cinque does not have sufficient driving experience over the past 3 years under normal highway operating conditions that would serve as an adequate predictor of future safe performance.

52. Peter D. Clark

Mr. Clark does not have sufficient driving experience over the past 3 years under normal highway operating conditions that would serve as an adequate predictor of future safe performance.

53. Lindon R. Coates

Mr. Coates does not have sufficient driving experience over the past 3 years under normal highway operating conditions that would serve as an adequate predictor of future safe performance.

54. Robert Coates, Jr.

Mr. Coates does not have sufficient driving experience over the past 3 years under normal highway operating conditions that would serve as an adequate predictor of future safe performance.

55. Roger L. Collins

Mr. Collins was charged with a moving violation on August 20, 1996, in conjunction with an accident, which disqualifies him.

56. Rusbel P. Contreras

Mr. Contreras does not have sufficient driving experience over the past 3 years under normal highway operating conditions that would serve as an adequate predictor of future safe performance.

57. George E. Cooper

Mr. Cooper does not have sufficient driving experience over the past 3 years under normal highway operating conditions that would serve as an adequate predictor of future safe performance.

58. Charles Cornwell

Mr. Cornwell does not have sufficient driving experience over the past 3 years under normal highway operating conditions that would serve as an adequate predictor of future safe performance.

59. Randy Cowgill

Mr. Cowgill does not have sufficient driving experience over the past 3 years under normal highway operating conditions that would serve as an adequate predictor of future safe performance.

60. David L. Creamer

Mr. Creamer does not have sufficient driving experience over the past 3 years under normal highway operating conditions that would serve as an adequate predictor of future safe performance.

61. Jo E. Crocker

Mr. Crocker does not have sufficient driving experience over the past 3 years under normal highway operating conditions that would serve as an adequate predictor of future safe performance.

62. Gerald Culverwell

Mr. Culverwell does not have sufficient driving experience over the past 3 years under normal highway operating conditions that would serve as an adequate predictor of future safe performance.

63. Jefferey A. Darge

Mr. Darge does not have sufficient driving experience over the past 3 years under normal highway operating conditions that would serve as an adequate predictor of future safe performance.

64. Eric Davis, Sr.

Mr. Davis does not have sufficient driving experience over the past 3 years under normal highway operating conditions that would serve as an adequate predictor of future safe performance.

65. Milton Day

Mr. Day had three commercial motor vehicle speeding violations within a 3-year period while operating a commercial motor vehicle. He does not qualify since each applicant is allowed only 2 citations.

66. William A. Decker

Mr. Decker had three commercial motor vehicle speeding violations within a 3-year period while operating a commercial motor vehicle. He does not qualify since each applicant is allowed only 2 citations.

67. Bradley D. DeHaven

Mr. DeHaven meets the vision requirements at 49 CFR 391.41(b)(10) according to his most recent eye exam. His corrected visual acuity is 20/20 in the right eye and 20/40 in the left eye. He does not need an exemption.

68. George P. Deon

Mr. Deon does not have three years of experience driving a commercial motor vehicle with his vision deficiency.

69. Rod Dowden-Parrott

Mr. Dowden-Parrott does not have sufficient driving experience over the past 3 years under normal highway operating conditions that would serve as an adequate predictor of future safe performance.

70.William E. Droll, Jr

Mr. Droll does not have sufficient driving experience over the past 3 years under normal highway operating conditions that would serve as an adequate predictor of future safe performance.

71. George Eicholz

Mr. Eicholz does not have sufficient driving experience over the past 3 years under normal highway operating conditions that would serve as an adequate predictor of future safe performance.

72. Frederick B. Ellis

Mr. Ellis does not have 3 years recent experience driving a commercial motor vehicle with his vision deficiency.

73. Van Emery, Jr.

Mr. Emery does not have sufficient driving experience over the past 3 years under normal highway operating conditions that would serve as an adequate predictor of future safety performance.

74. Mitchell E. Estep

Mr. Estep meets the vision requirements at 49 CFR 391.41(b)(10) according to his most recent eye exam. The doctor was able to correct the driver's vision to 20/40 in the weaker left eye. The right eye is normal with an uncorrected visual acuity of 20/20. He does not need an exemption.

75. John Evenson

Mr. Evenson does not have sufficient driving experience over the past 3 years under normal highway operating conditions that would serve as an adequate predictor of future safe performance.

76. Mark Everline

Mr. Everline does not have sufficient driving experience over the past 3 years under normal highway operating conditions that would serve as an adequate predictor of future safe performance.

77. Loel Faulkinham

Mr. Faulkinham does not have sufficient peripheral vision in the better eye to qualify for an exemption.

78. Thomas Ferris

Mr. Ferris does not have sufficient driving experience over the past 3 years under normal highway operating conditions that would serve as an adequate predictor of future safe performance.

79. Jerald Ford

Mr. Ford does not have sufficient driving experience over the past 3 years under normal highway operating conditions that would serve as an adequate predictor of future safe performance.

80. Vernon L. Forman

Mr. Forman has other medical conditions making him otherwise unqualified under the Federal Motor Carrier Safety Regulations. All applicants must meet all other physical qualifications standards in 49 CFR 391.41(b)(1–13).

81. Hyman Fowler

Mr. Fowler does not have sufficient driving experience over the past 3 years under normal highway operating conditions that would serve as an adequate predictor of future safe performance.

82. Michael S. Gancasz

Mr. Gancasz does not have sufficient driving experience over the past 3 years under normal highway operating conditions that would serve as an adequate predictor of future safe performance.

83. Martin E. Gard

Mr. Gard does not have sufficient driving experience over the past 3 years under normal highway operating conditions that would serve as an adequate predictor of future safe performance.

84. Alexander J. Gater

Mr. Gater does not have sufficient driving experience over the past 3 years under normal highway operating conditions that would serve as an adequate predictor of future safe performance.

85. William C. Greenberg

Mr. Greenberg does not have sufficient driving experience over the past 3 years under normal highway operating conditions that would serve as an adequate predictor of future safe performance.

86. David J. Greenwood

Mr. Greenwood does not have sufficient driving experience over the past 3 years under normal highway operating conditions that would serve as an adequate predictor of future safe performance.

87. William K. Grider

Mr. Grider does not have sufficient driving experience over the past 3 years under normal highway operating

conditions that would serve as an adequate predictor of future safe performance.

88. Mark A. Grissom

Mr. Grissom does not have sufficient driving experience over the past 3 years under normal highway operating conditions that would serve as an adequate predictor of future safe performance.

89. Harold Gunter

Mr. Gunter meets the vision requirements at 49 CFR 391.41(b)(10). His corrected visual acuity is 20/20 in the right eye and 20/30 in the left eye. He does not need an exemption.

90. Jeffrey Hahn, Jr.

Mr. Hahn does not have sufficient driving experience over the past 3 years under normal highway operating conditions that would serve as an adequate predictor of future safe performance.

91. James W. Harris

Mr. Harris does not have 3 years of experience driving a commercial motor vehicle with his vision deficiency.

92. Johnny W. Hartley

Mr. Hartley does not have sufficient driving experience over the past 3 years under normal highway operating conditions that would serve as an adequate predictor of future safe performance.

93. Calvin Hastings

Mr. Hastings does not have sufficient driving experience over the past 3 years under normal highway operating conditions that would serve as an adequate predictor of future safe performance.

94. Timmie E. Headley

Mr. Headley does not have sufficient driving experience over the past 3 years under normal highway operating conditions that would serve as an adequate predictor of future safe performance.

95. Thomas E. Henderson, Sr.

Mr. Henderson does not have sufficient driving experience over the past 3 years under normal highway operating conditions that would serve as an adequate predictor of future safe performance.

96. Terry Hendrickson

Mr. Hendrickson does not have sufficient driving experience over the past 3 years under normal highway operating conditions that would serve as an adequate predictor of future safe performance.

97. Robert Henrikson

Mr. Henrikson does not have sufficient driving experience over the past 3 years under normal highway operating conditions that would serve as an adequate predictor of future safe performance.

98. Francis K. Hill

Mr. Hill does not have sufficient driving experience over the past 3 years under normal highway operating conditions that would serve as an adequate predictor of future safe performance.

99. Donn Hinkle

Mr. Hinkle does not have sufficient driving experience over the past 3 years under normal highway operating conditions that would serve as an adequate predictor of future safe performance.

100. James Hoeft

Mr. Hoeft does not have 3 years of experience driving a commercial motor vehicle with his vision deficiency.

101. Craig Hoffman

Mr. Hoffman does not have sufficient driving experience over the past 3 years under normal highway operating conditions that would serve as an adequate predictor of future safe performance.

102. James B. Houchins

Mr. Houchins does not have sufficient driving experience over the past 3 years under normal highway operating conditions that would serve as an adequate predictor of future safe performance.

103. Willie J. Howard, Jr.

Mr. Howard does not have sufficient driving experience over the past 3 years under normal highway operating conditions that would serve as an adequate predictor of future safe performance.

104. Randy C. Howell

Mr. Howell does not have sufficient driving experience over the past 3 years under normal highway operating conditions that would serve as an adequate predictor of future safe performance.

105. William J. Humphrey

Mr. Humphrey does not have sufficient driving experience over the past 3 years under normal highway operating conditions that would serve as an adequate predictor of future safe performance.

106. Aldeny Hurst, Jr.

Mr. Hurst does not have sufficient driving experience over the past 3 years under normal highway operating conditions that would serve as an adequate predictor of future safe performance.

107. Danny L. Hyde

Mr. Hyde does not have sufficient driving experience over the past 3 years under normal highway operating conditions that would serve as an adequate predictor of future safe performance.

108. James Jackson

Mr. Jackson does not have sufficient driving experience over the past 3 years under normal highway operating conditions that would serve as an adequate predictor of future safe performance.

109. Keith W. Jackson

Mr. Jackson does not have sufficient driving experience over the past 3 years under normal highway operating conditions that would serve as an adequate predictor of future safe performance.

110. Kelvin C. Jackson

Mr. Jackson does not have sufficient driving experience over the past 3 years under normal highway operating conditions that would serve as an adequate predictor of future safe performance.

111. Monte L. Jarvis

Mr. Jarvis does not have sufficient driving experience over the past 3 years under normal highway operating conditions that would serve as an adequate predictor of future safe performance.

112. Chris D. Johnson

Mr. Johnson does not have sufficient driving experience over the past 3 years under normal highway operating conditions that would serve as an adequate predictor of future safe performance.

113. Curtis Jones

Mr. Jones does not have sufficient driving experience over the past 3 years under normal highway operating conditions that would serve as an adequate predictor of future safe performance.

114. Derek L. Jones

Mr. Jones does not have sufficient driving experience over the past 3 years

under normal highway operating conditions that would serve as an adequate predictor of future safe performance.

115. Harold D. Jones

Mr. Jones does not have sufficient driving experience over the past 3 years under normal highway operating conditions that would serve as an adequate predictor of future safe performance.

116. Paul Jones

Mr. Jones does not have sufficient driving experience over the past 3 years under normal highway operating conditions that would serve as an adequate predictor of future safe performance.

117. James J. Keranen

Mr. Keranen does not have sufficient driving experience over the past 3 years under normal highway operating conditions that would serve as an adequate predictor of future safe performance.

118. Leora J. Kirby

Ms. Kirby does not have sufficient driving experience over the past 3 years under normal highway operating conditions that would serve as an adequate predictor of future safe performance.

119. Mark Knochelman

Mr. Knochelman does not have sufficient driving experience over the past 3 years under normal highway operating conditions that would serve as an adequate predictor of future safe performance.

120. Kelly R. Konesky

Mr. Konesky does not have sufficient driving experience over the past 3 years under normal highway operating conditions that would serve as an adequate predictor of future safe performance.

121. Charles P. Landrus

Mr. Landrus does not have sufficient driving experience over the past 3 years under normal highway operating conditions that would serve as an adequate predictor of future safe performance.

122. Gary B. Laramore, Sr.

Mr. Laramore does not have sufficient driving experience over the past 3 years under normal highway operating conditions that would serve as an adequate predictor of future safe performance.

123. John Lawrence

Mr. Lawrence does not have sufficient driving experience over the past 3 years under normal highway operating conditions that would serve as an adequate predictor of future safe performance.

124. Didge Lawson

Mr. Lawson does not have sufficient driving experience over the past 3 years under normal highway operating conditions that would serve as an adequate predictor of future safe performance.

125. Byron K. Leggett

Mr. Leggett does not have sufficient driving experience over the past 3 years under normal highway operating conditions that would serve as an adequate predictor of future safe performance.

126. Ray P. Lenz

Mr. Lenz does not have sufficient driving experience over the past 3 years under normal highway operating conditions that would serve as an adequate predictor of future safe performance.

127. Earnest W. Lewis

Mr. Lewis does not have 3 years of experience driving a commercial motor vehicle with his vision deficiency.

128. Jerry P. Lindesmith

Mr. Lindesmith does not have 3 years of experience driving a commercial motor vehicle with his vision deficiency.

129. James S. Loggins

Mr. Loggins does not have sufficient driving experience over the past 3 years under normal highway operating conditions that would serve as an adequate predictor of future safe performance.

130. Billy W. Long

Mr. Long does not have sufficient driving experience over the past 3 years under normal highway operating conditions that would serve as an adequate predictor of future safe performance.

131. William Long

Mr. Long does not have sufficient driving experience over the past 3 years under normal highway operating conditions that would serve as an adequate predictor of future safe performance.

132. Michael C. Love

Mr. Love does not have sufficient driving experience over the past 3 years under normal highway operating conditions that would serve as an adequate predictor of future safe performance.

133. Herman G. Lovell

Mr. Lovell does not have sufficient driving experience over the past 3 years under normal highway operating conditions that would serve as an adequate predictor of future safe performance.

134. Bruce A. Lucas

Mr. Lucas does not have sufficient driving experience over the past 3 years under normal highway operating conditions that would serve as an adequate predictor of future safe performance.

135. Marvin M. Lundquist

Mr. Lundquist meets vision requirements at 49 CFR 391.41(b)(10). According to a July 14, 1999, eye exam, his corrected visual acuity is 20/20 in the right eye and 20/30 in the left eye. He does not need an exemption.

136. Randall S. Lunge

Mr. Lunge does not have sufficient driving experience over the past 3 years under normal highway operating conditions that would serve as an adequate predictor of future safe performance.

137. James E. Lutt

Mr. Lutt does not have sufficient driving experience over the past 3 years under normal highway operating conditions that would serve as an adequate predictor of future safe performance.

138. Mervin D. Lytle

Mr. Lytle does not have sufficient driving experience over the past 3 years under normal highway operating conditions that would serve as an adequate predictor of future safe performance.

139. Jacob D. Maestas

Mr. Maestas does not have sufficient driving experience over the past 3 years under normal highway operating conditions that would serve as an adequate predictor of future safe performance.

140. Roland J. Mandigo

Mr. Mandigo does not have sufficient driving experience over the past 3 years under normal highway operating conditions that would serve as an adequate predictor of future safe performance.

141. Michael R. Mangan

Mr. Mangan does not have sufficient driving experience over the past 3 years under normal highway operating conditions that would serve as an adequate predictor of future safe performance.

142. David J. Mansfield

Mr. Mansfield does not have sufficient driving experience over the past 3 years under normal highway operating conditions that would serve as an adequate predictor of future safe performance.

143. Harold W. Martin

Mr. Martin does not have sufficient driving experience over the past 3 years under normal highway operating conditions that would serve as an adequate predictor of future safe performance.

144. Patrick J. Martin, Jr.

Mr. Martin does not have sufficient driving experience over the past 3 years under normal highway operating conditions that would serve as an adequate predictor of future safe performance.

145. Jose L. Martinez

Mr. Martinez meets the vision requirements at 49 CFR 391.41(b)(10). His corrected visual acuity is 20/20 in the right eye and 20/30 in the left eye. He does not need an exemption.

146. Mark A. Massengill

Mr. Massengill does not have sufficient driving experience over the past 3 years under normal highway operating conditions that would serve as an adequate predictor of future safe performance.

147. Jason Masterson

Mr. Masterson does not have sufficient driving experience over the past 3 years under normal highway operating conditions that would serve as an adequate predictor of future safe performance.

148. Walter P. Mathys

Mr. Mathys does not have sufficient driving experience over the past 3 years under normal highway operating conditions that would serve as an adequate predictor of future safe performance.

149. Gerald M. McCay

Mr. McCay does not have sufficient driving experience over the past 3 years under normal highway operating conditions that would serve as an adequate predictor of future safe performance.

150. Dennis M. McDaniel

Mr. McDaniel does not have sufficient driving experience over the past 3 years under normal highway operating conditions that would serve as an adequate predictor of future safe performance.

151. Donald R. McGee

Mr. McGee does not have sufficient driving experience over the past 3 years under normal highway operating conditions that would serve as an adequate predictor of future safe performance.

152. Bernard F. McIlonie

Mr. McIlonie does not have sufficient driving experience over the past 3 years under normal highway operating conditions that would serve as an adequate predictor of future safe performance.

153. Charles O. McWhortler

Mr. McWhortler does not have sufficient driving experience over the past 3 years under normal highway operating conditions that would serve as an adequate predictor of future safe performance.

154. Felipe Medina

Mr. Medina does not have 3 years of experience driving a commercial motor vehicle with his vision deficiency.

155. Rosalio Mendoza

Mr. Mendoza does not have sufficient driving experience over the past 3 years under normal highway operating conditions that would serve as an adequate predictor of future safe performance.

156. Nicholas Mercorella, Jr.

Mr. Mercorella does not have sufficient driving experience over the past 3 years under normal highway operating conditions that would serve as an adequate predictor of future safe performance.

157. Dennis Michaelis

Mr. Michaelis meets the vision requirements at 49 CFR 392.41(b)(10). His vision is corrected to 20/40 in the right eye and 20/20 in the left eye. He does not need an exemption.

158. Charles B. Miller

Mr. Miller does not have sufficient driving experience over the past 3 years under normal highway operating conditions that would serve as an adequate predictor of future safe performance.

159. Darian T. Miller

Mr. Miller does not have sufficient driving experience over the past 3 years under normal highway operating conditions that would serve as an adequate predictor of future safe performance.

160. David S. Moore

Mr. Moore meets the vision requirements at 49 CFR 391.41(b)(10). According to his most recent eye exam the doctor states that his corrected visual acuity is 20/25 in the right eye and 20/40 in the left eye. He does not need an exemption.

161. Jimmy L. Moore

Mr. Moore was involved in an accident on 7/3/98 and was issued a citation for an ''Improper Turn.'' This is a disqualifying offense. An applicant for an exemption cannot be involved in an accident for which he or she received a citation for a moving violation.

162. Philip B.Moore

Mr. Moore does not have 3 years of experience driving a commercial motor vehicle with his vision deficiency.

163. Doug Moos

Mr. Moos does not have sufficient driving experience over the past 3 years under normal highway operating conditions that would serve as an adequate predictor of future safe performance.

164. Benjamin C. Morris

Mr. Morris does not have sufficient driving experience over the past 3 years under normal highway operating conditions that would serve as an adequate predictor of future safe performance.

165. Theodore C. Morris

Mr. Morris does not have sufficient driving experience over the past 3 years under normal highway operating conditions that would serve as an adequate predictor of future safe performance.

166. David L. Norris

Mr. Norris does not have sufficient driving experience over the past 3 years under normal highway operating conditions that would serve as an adequate predictor of future safe performance.

167. Guillermo G. Nuncio

Mr. Nuncio meets the vision requirements at 49 CFR 391.41(b)(10). According to his most recent eye exam, the doctor states that his corrected visual acuity is 20/25 in the right eye

and 20/20 in the left eye. He does not need an exemption.

168. Will H. Ogburn

Mr. Ogburn does not have sufficient driving experience over the past 3 years under normal highway operating conditions that would serve as an adequate predictor of future safe performance.

169. Howard J. Oliver, II

Mr. Oliver does not have sufficient driving experience over the past 3 years under normal highway operating conditions that would serve as an adequate predictor of future safe performance.

170. Keith E. Page

Mr. Page does not have sufficient driving experience over the past 3 years under normal highway operating conditions that would serve as an adequate predictor of future safe performance.

171. Jeffery A. Pate

Mr. Pate does not have sufficient driving experience over the past 3 years under normal highway operating conditions that would serve as an adequate predictor of future safe performance.

172. Craig B. Peay

Mr. Peay does not have sufficient driving experience over the past 3 years under normal highway operating conditions that would serve as an adequate predictor of future safe performance.

173. Randy R. Pedeferri

Mr. Pedeferri does not have sufficient driving experience over the past 3 years under normal highway operating conditions that would serve as an adequate predictor of future safe performance.

174. Rafael O. Perez

Mr. Perez does not have sufficient driving experience over the past 3 years under normal highway operating conditions that would serve as an adequate predictor of future safe performance.

175. Jeffrey Peterson

Mr. Peterson does not have sufficient driving experience over the past 3 years under normal highway operating conditions that would serve as an adequate predictor of future safe performance.

176. David A. Petsch

Mr. Petsch does not have sufficient driving experience over the past 3 years under normal highway operating conditions that would serve as an adequate predictor of future safe performance. He does not have 3 years experience driving a commercial motor vehicle with the vision deficiency.

177. Marvin L. Pond

Mr. Pond does not have sufficient driving experience over the past 3 years under normal highway operating conditions that would serve as an adequate predictor of future safe performance.

178. Vicki L. Powell

Ms. Powell does not have sufficient driving experience over the past 3 years under normal highway operating conditions that would serve as an adequate predictor of future safe performance.

179. James H. Prewitt, Jr.

Mr. Prewitt does not have sufficient driving experience over the past 3 years under normal highway operating conditions that would serve as an adequate predictor of future safe performance.

180. Welcome W. Pryor, Jr.

Mr. Pryor does not have sufficient driving experience over the past 3 years under normal highway operating conditions that would serve as an adequate predictor of future safe performance.

181. James A. Reay

Mr. Reay does not have sufficient driving experience over the past 3 years under normal highway operating conditions that would serve as an adequate predictor of future safe performance.

182. Christopher Reed

Mr. Reed does not have sufficient driving experience over the past 3 years under normal highway operating conditions that would serve as an adequate predictor of future safe performance.

183. Kenion L. Reid

Mr. Reid does not have sufficient driving experience over the past 3 years under normal highway operating conditions that would serve as an adequate predictor of future safe performance.

184. Elmer A. Richmeier

Mr. Richmeier does not have sufficient driving experience over the past 3 years under normal highway operating conditions that would serve as an adequate predictor of future safe performance.

185. Leslie O. Roberson

Mr. Roberson's commercial driver's license was suspended in December 1996 for failing to comply with a fine for a moving violation. He does not qualify for an exemption since he had a suspension during the 3-year period.

186. William Rogers

Mr. Rogers does not have 3 years recent experience driving a commercial motor vehicle with his vision deficiency.

187. Robert L. Roy

Mr. Roy was involved in an accident on July 22, 1997, and he was convicted of ''Following Improperly.'' He does not qualify for an exemption since he was involved in an accident for which he received a citation for a moving violation.

188. Christopher A. Roystan

Mr. Roystan does not have sufficient driving experience over the past 3 years under normal highway operating conditions that would serve as an adequate predictor of future safe performance.

189. Brian K. Ruch

Mr. Ruch does not qualify for an exemption because of involvement in two serious violations and a license suspension during the 3-year period.

190. Robert L. Rundall

Mr. Rundall does not have sufficient driving experience over the past 3 years under normal highway operating conditions that would serve as an adequate predictor of future safe performance.

191. Steven E. Russell

Mr. Russell does not have sufficient driving experience over the past 3 years under normal highway operating conditions that would serve as an adequate predictor of future safe performance.

192. Eugene Ryals

Mr. Ryals does not have sufficient driving experience over the past 3 years under normal highway operating conditions that would serve as an adequate predictor of future safe performance.

193. Robert A. Ryals

Mr. Ryals does not have sufficient driving experience over the past 3 years under normal highway operating conditions that would serve as an adequate predictor of future safe performance.

194. Donald E. Sanders

Mr. Sanders does not have sufficient driving experience over the past 3 years under normal highway operating conditions that would serve as an adequate predictor of future safe performance.

195. Dawna M. Saunders

Ms. Saunders does not have sufficient driving experience over the past 3 years under normal highway operating conditions that would serve as an adequate predictor of future safe performance.

196. James Schaaf

Mr. Schaaf does not have sufficient driving experience over the past 3 years under normal highway operating conditions that would serve as an adequate predictor of future safe performance.

197. Ted Schmidt

Mr. Schmidt does not meet all other physical qualifications standards in 49 CFR 391.41(b)(1–13) to qualify for an exemption.

198. James R. Schnaiter

Mr. Schnaiter does not have sufficient driving experience over the past 3 years under normal highway operating conditions that would serve as an adequate predictor of future safe performance.

199. Jeffery Scholl

Mr. Scholl does not have sufficient driving experience over the past 3 years under normal highway operating conditions that would serve as an adequate predictor of future safe performance.

200. Paul E. Schwartz

Mr. Schwartz does not have sufficient driving experience over the past 3 years under normal highway operating conditions that would serve as an adequate predictor of future safe performance.

201. James A. Scott, Jr.

Mr. Scott does not have sufficient driving experience over the past 3 years under normal highway operating conditions that would serve as an adequate predictor of future safe performance.

202. Robert G. Seils

Mr. Seils does not have sufficient driving experience over the past 3 years under normal highway operating conditions that would serve as an adequate predictor of future safe performance.

203. Carl Sendelbach

Mr. Sendelbach does not have sufficient driving experience over the past 3 years under normal highway operating conditions that would serve as an adequate predictor of future safe performance.

204. Robert Shelley

Mr. Shelley does not have sufficient driving experience over the past 3 years under normal highway operating conditions that would serve as an adequate predictor of future safe performance.

205. Jeffery W. Shelton

Mr. Shelton does not have sufficient driving experience over the past 3 years under normal highway operating conditions that would serve as an adequate predictor of future safe performance.

206. Kirk S. Shenberger

Mr. Shenberger does not have sufficient driving experience over the past 3 years under normal highway operating conditions that would serve as an adequate predictor of future safe performance.

207. Jack Shropshire

Mr. Shropshire does not have sufficient driving experience over the past 3 years under normal highway operating conditions that would serve as an adequate predictor of future safe performance.

208. Donald V. Sill

Mr. Sill does not have sufficient driving experience over the past 3 years under normal highway operating conditions that would serve as an adequate predictor of future safe performance.

209. Gurdeep Singh

Mr. Singh does not have sufficient driving experience over the past 3 years under normal highway operating conditions that would serve as an adequate predictor of future safe performance.

210. Harold E. Singley

Mr. Singley does not have sufficient driving experience over the past 3 years under normal highway operating conditions that would serve as an adequate predictor of future safe performance.

211. Tony Slaughter

Mr. Slaughter does not have 3 years recent experience driving a commercial motor vehicle with his vision deficiency.

212. Gary A. Sluder

Mr. Sluder does not have sufficient driving experience over the past 3 years under normal highway operating conditions that would serve as an adequate predictor of future safe performance.

213. Robert P. Smith

Mr. Smith does not have sufficient driving experience over the past 3 years under normal highway operating conditions that would serve as an adequate predictor of future safe performance.

214. William C. Smith

Mr. Smith does not have sufficient driving experience over the past 3 years under normal highway operating conditions that would serve as an adequate predictor of future safe performance.

215. Patrick W. Sokolik

Mr. Sokolik does not have sufficient driving experience over the past 3 years under normal highway operating conditions that would serve as an adequate predictor of future safe performance.

216. John W. Sommerfeldt

Mr. Sommerfeldt does not have sufficient driving experience over the past 3 years under normal highway operating conditions that would serve as an adequate predictor of future safe performance.

217. Jean Sommers

Ms. Sommers has no experience operating a commercial motor vehicle and therefore presented no evidence from which the FMCSA can conclude that granting the exemption is likely to achieve a level of safety equal to that existing without the exemption.

218. William A. Sonderegger

Mr. Sonderegger does not have sufficient driving experience over the past 3 years under normal highway operating conditions that would serve as an adequate predictor of future safe performance.

219. Marcial Soto-Rivas

Mr. Soto-Rivas was involved in an accident on August 24, 1998, in which he was cited for ''Improper Lane Travel.'' This is a disqualifying offence. An exemption applicant is not allowed involvement in an accident where a citation is received for a moving violation.

220. W.C. Sparks

Mr. Sparks does not have sufficient driving experience over the past 3 years under normal highway operating conditions that would serve as an adequate predictor of future safe performance.

221. Daren E. Switzer

Mr. Switzer does not have sufficient driving experience over the past 3 years under normal highway operating conditions that would serve as an adequate predictor of future safe performance.

222. Peter B. Sylvester

Mr. Sylvester does not have sufficient driving experience over the past 3 years under normal highway operating conditions that would serve as an adequate predictor of future safe performance.

223. Robert J. Szabo

Mr. Szabo does not have sufficient driving experience over the past 3 years under normal highway operating conditions that would serve as an adequate predictor of future safe performance.

224. Jeffrey M. Taber

Mr. Taber does not have sufficient driving experience over the past 3 years under normal highway operating conditions that would serve as an adequate predictor of future safe performance.

225. George A. Tallent

Mr. Tallent does not have sufficient driving experience over the past 3 years under normal highway operating conditions that would serve as an adequate predictor of future safe performance.

226. Ralph J. Tanner

Mr. Tanner meets the vision requirements at 49 CFR 391.41(b)(10). According to his ophthalmologist, he is 20/20 in the left eye and 20/40 in the right eye uncorrected. He does not need an exemption.

227. Johann Theiss

Mr. Theiss meets the vision requirements at 49 CFR 391.41(b)(10). According to his most recent eye exam, the doctor states that his corrected visual acuity is 20/30 in his right and 20/20 his left eye. He does not need an exemption.

228. Barbara Thompson

Ms. Thompson does not have sufficient driving experience over the past 3 years under normal highway operating conditions that would serve as an adequate predictor of future safe performance.

229. John W. Tozer, Jr.

Mr. Tozer was involved in an accident on February 10, 1999. He was cited for speeding in connection with the accident. An applicant for an exemption cannot be involved in an accident for which he or she received a citation for a moving violation.

230. Omer E. Troyer

Mr. Troyer does not have sufficient driving experience over the past 3 years under normal highway operating conditions that would serve as an adequate predictor of future safe performance.

231. Joseph Van Norman

Mr. Van Norman does not have 3 years recent experience driving a commercial vehicle with his vision deficiency.

232. Jeffery A. Voltz

Mr. Voltz does not have sufficient driving experience over the past 3 years under normal highway operating conditions that would serve as an adequate predictor of future safe performance.

233. Kevin M. Walsh

Mr. Walsh does not have sufficient driving experience over the past 3 years under normal highway operating conditions that would serve as an adequate predictor of future safe performance.

234. David E. Ware

Mr. Ware meets the vision requirements at 49 CFR 391.41(b)(10). His corrected visual acuity is 20/20 in the left eye and 20/40 in the right eye. On June 16, 1999, the Alabama Department of Motor Vehicles removed the intrastate restriction from his commercial license. He does not need an exemption.

235. Charles Warren

Mr. Warren does not have sufficient driving experience over the past 3 years under normal highway operating conditions that would serve as an adequate predictor of future safe performance.

236. Howard N. Webster, Jr.

Mr. Webster does not have sufficient driving experience over the past 3 years under normal highway operating conditions that would serve as an adequate predictor of future safe performance.

237. William K. Wells

Mr. Wells does not have sufficient driving experience over the past 3 years under normal highway operating conditions that would serve as an adequate predictor of future safe performance.

238. Scott T. Welter

Mr. Welter does not have sufficient driving experience over the past 3 years under normal highway operating conditions that would serve as an adequate predictor of future safe performance.

239. Thomas P. Werner

Mr. Werner does not have sufficient driving experience over the past 3 years under normal highway operating conditions that would serve as an adequate predictor of future safe performance.

240. Ricky Whitaker

Mr. Whitaker meets the vision requirements at 49 CFR 391.41(b)(10). He does not need a vision exemption.

241. Matthew Whitten

Mr. Whitten does not have sufficient driving experience over the past 3 years under normal highway operating conditions that would serve as an adequate predictor of future safe performance.

242. David M. Wibirt

Mr. Wibirt does not have sufficient driving experience over the past 3 years under normal highway operating conditions that would serve as an adequate predictor of future safe performance.

243. David Wills

Mr. Wills does not have sufficient driving experience over the past 3 years under normal highway operating conditions that would serve as an adequate predictor of future safe performance.

244. James W. Wilson

Mr. Wilson does not have sufficient driving experience over the past 3 years under normal highway operating conditions that would serve as an adequate predictor of future safe performance.

245. Douglas M. Worley

Mr. Worley does not have sufficient driving experience over the past 3 years under normal highway operating conditions that would serve as an adequate predictor of future safe performance.

246. Donald Wright

Mr. Wright does not have sufficient driving experience over the past 3 years under normal highway operating conditions that would serve as an adequate predictor of future safe performance.

247. Allen W. Wyskowski

Mr. Wyskowski does not have sufficient driving experience over the past 3 years under normal highway operating conditions that would serve as an adequate predictor of future safe performance.

Authority: 49 U.S.C. 322, 31315, and 31136; 49 CFR 1.73.

Issued on: December 4, 2000.

Brian M. McLaughlin,

Director, Office of Policy Plans and Regulations.

[FR Doc. 00–31346 Filed 12–8–00; 8:45 am]

BILLING CODE 4910–EX–P

Federal Register

Monday,
December 11, 2000

Part VI

The President

Executive Order 13179—Providing Compensation to America's Nuclear Weapons Workers

Federal Register
Vol. 65, No. 238
Monday, December 11, 2000

Presidential Documents

Title 3—

The President

Executive Order 13179 of December 7, 2000

Providing Compensation to America's Nuclear Weapons Workers

By the authority vested in me as President by the Constitution and the laws of the United States of America, including Public Law 106-398, the Energy Employees Occupational Illness Compensation Program Act of 2000 (Public Law 106-398, the ''Act''), and to allocate the responsibilities imposed by that legislation and to provide for further legislative efforts, it is hereby ordered as follows:

Section 1. *Policy.* Since World War II, hundreds of thousands of men and women have served their Nation in building its nuclear defense. In the course of their work, they overcame previously unimagined scientific and technical challenges. Thousands of these courageous Americans, however, paid a high price for their service, developing disabling or fatal illnesses as a result of exposure to beryllium, ionizing radiation, and other hazards unique to nuclear weapons production and testing. Too often, these workers were neither adequately protected from, nor informed of, the occupational hazards to which they were exposed.

Existing workers' compensation programs have failed to provide for the needs of these workers and their families. Federal workers' compensation programs have generally not included these workers. Further, because of long latency periods, the uniqueness of the hazards to which they were exposed, and inadequate exposure data, many of these individuals have been unable to obtain State workers' compensation benefits. This problem has been exacerbated by the past policy of the Department of Energy (DOE) and its predecessors of encouraging and assisting DOE contractors in opposing the claims of workers who sought those benefits. This policy has recently been reversed.

While the Nation can never fully repay these workers or their families, they deserve recognition and compensation for their sacrifices. Since the Administration's historic announcement in July of 1999 that it intended to compensate DOE nuclear weapons workers who suffered occupational illnesses as a result of exposure to the unique hazards in building the Nation's nuclear defense, it has been the policy of this Administration to support fair and timely compensation for these workers and their survivors. The Federal Government should provide necessary information and otherwise help employees of the DOE or its contractors determine if their illnesses are associated with conditions of their nuclear weapons-related work; it should provide workers and their survivors with all pertinent and available information necessary for evaluating and processing claims; and it should ensure that this program minimizes the administrative burden on workers and their survivors, and respects their dignity and privacy. This order sets out agency responsibilities to accomplish these goals, building on the Administration's articulated principles and the framework set forth in the Energy Employees Occupational Illness Compensation Program Act of 2000. The Departments of Labor, Health and Human Services, and Energy shall be responsible for developing and implementing actions under the Act to compensate these workers and their families in a manner that is compassionate, fair, and timely. Other Federal agencies, as appropriate, shall assist in this effort.

Sec. 2. *Designation of Responsibilities for Administering the Energy Employees' Occupational Illness Compensation Program (''Program'').*

(a) *Secretary of Labor.* The Secretary of Labor shall have primary responsibility for administering the Program. Specifically, the Secretary shall:

(i) Administer and decide all questions arising under the Act not assigned to other agencies by the Act or by this order, including determining the eligibility of individuals

with covered occupational illnesses and their survivors and adjudicating claims for compensation and benefits;

(ii) No later than May 31, 2001, promulgate regulations for the administration of the Program, except for functions assigned to other agencies pursuant to the Act or this order;

(iii) No later than July 31, 2001, ensure the availability, in paper and electronic format, of forms necessary for making claims under the Program; and

(iv) Develop informational materials, in coordination with the Secretary of Energy and the Secretary of Health and Human Services, to help potential claimants understand the Program and the application process, and provide these materials to individuals upon request and to the Secretary of Energy and the Attorney General for dissemination to potentially eligible individuals.

(b) *Secretary of Health and Human Services.* The Secretary of Health and Human Services shall:

(i) No later than May 31, 2001, promulgate regulations establishing:

(A) guidelines, pursuant to section 3623(c) of the Act, to assess the likelihood that an individual with cancer sustained the cancer in the performance of duty at a Department of Energy facility or an atomic weapons employer facility, as defined by the Act; and

(B) methods, pursuant to section 3623(d) of the Act, for arriving at and providing reasonable estimates of the radiation doses received by individuals applying for assistance under this program for whom there are inadequate records of radiation exposure;

(ii) In accordance with procedures developed by the Secretary of Health and Human Services, consider and issue determinations on petitions by classes of employees to be treated as members of the Special Exposure Cohort;

(iii) With the assistance of the Secretary of Energy, apply the methods promulgated under subsection (b)(i)(B) to estimate the radiation doses received by individuals applying for assistance;

(iv) Upon request from the Secretary of Energy, appoint members for a physician panel or panels to consider individual workers' compensation claims as part of the Worker Assistance Program under the process established pursuant to subsection (c)(v); and

(v) Provide the Advisory Board established under section 4 of this order with administrative services, funds, facilities, staff, and other necessary support services and perform the administrative functions of the President under the Federal Advisory Committee Act, as amended (5 U.S.C. App.), with respect to the Advisory Board.

(c) *Secretary of Energy.* The Secretary of Energy shall:

(i) Provide the Secretary of Health and Human Services and the Advisory Board on Radiation and Worker Health access, in accordance with law, to all relevant information pertaining to worker exposures, including access to restricted data, and any other technical assistance needed to carry out their responsibilities under subsection (b)(ii) and section 4(b), respectively.

(ii) Upon request from the Secretary of Health and Human Services or the Secretary of Labor, and as permitted by law, require a DOE contractor, subcontractor, or

designated beryllium vendor, pursuant to section 3631(c) of the Act, to provide information relevant to a claim under this Program;

(iii) Identify and notify potentially eligible individuals of the availability of compensation under the Program;

(iv) Designate, pursuant to sections 3621(4)(B) and 3622 of the Act, atomic weapons employers and additions

to the list of designated beryllium vendors;

(v) Pursuant to Subtitle D of the Act, negotiate agreements with the chief executive officer of each State in which there is a DOE facility, and other States as appropriate, to provide assistance to a DOE contractor employee on filing a State workers' compensation system claim, and establish a Worker Assistance Program to help individuals whose illness is related to employment in the DOE's nuclear weapons complex, or the individual's survivor if the individual is deceased, in applying for State workers' compensation benefits. This assistance shall include:

(1) Submittal of reasonable claims to a physician panel, appointed by the Secretary of Health and Human Services and administered by the Secretary of Energy, under procedures established by the Secretary of Energy, for determination of whether the individual's illness or death arose out of and in the course of employment by the DOE or its contractors and exposure to a toxic substance at a DOE facility; and

(2) For cases determined by the physician panel and the Secretary of Energy under section 3661(d) and (e) of the Act to have arisen out of and in the course of employment by the DOE or its contractors and exposure to a toxic substance at a DOE facility, provide assistance to the individual in filing for workers' compensation benefits. The Secretary shall not contest these claims and, to the extent permitted by law, shall direct a DOE contractor who employed the applicant not to contest the claim;

(vi) Report on the Worker Assistance Program by making publicly available on at least an annual basis claims- related data, including the number of claims filed, the number of illnesses found to be related to work at a DOE

facility, job location and description, and number of successful State workers' compensation claims awarded; and

(vii) No later than January 15, 2001, publish in the **Federal Register** a list of atomic weapons employer facilities within the meaning of section 3621(5) of the Act, Department of Energy employer facilities within the meaning of section 3621(12) of the Act, and a list of facilities owned and operated by a beryllium vendor, within the meaning of section 3621(6) of the Act.

(d) *Attorney General.* The Attorney General shall:

(i) Develop procedures to notify, to the extent possible, each claimant (or the survivor of that claimant if deceased) whose claim for compensation under section 5 of the Radiation Exposure Compensation Act has been or is approved by the Department of Justice, of the availability of supplemental compensation and benefits under the Energy Employees Occupational Illness Compensation Program;

(ii) Identify and notify eligible covered uranium employees or their survivors of the availability of supplemental compensation under the Program; and

(iii) Upon request by the Secretary of Labor, provide information needed to adjudicate the claim of a covered uranium employee under this Program.

Sec. 3. *Establishment of Interagency Working Group.*

(a) There is hereby established an Interagency Working Group to be composed of representatives from the Office of Management and Budget, the National Economic Council, and the Departments of Labor, Energy, Health and Human Services, and Justice.

(b) The Working Group shall:

(i) By January 1, 2001, develop a legislative proposal to ensure the Program's fairness and efficiency, including provisions to assure adequate administrative resources and swift dispute resolution; and

(ii) Address any impediments to timely and coordinated Program implementation.

Sec. 4. *Establishment of Advisory Board on Radiation and Worker Health.*

(a) Pursuant to Public Law 106-398, there is hereby established an Advisory Board on Radiation and Health (Advisory Board). The Advisory Board shall consist of no more than 20 members to be appointed by the President. Members shall include affected workers and their representatives, and representatives from scientific and medical communities. The President shall designate a Chair for the Board among its members.

(b) The Advisory Board shall:

(i) Advise the Secretary of Health and Human Services on the development of guidelines under section 2(b)(i) of this order;

(ii) Advise the Secretary of Health and Human Services on the scientific validity and quality of dose reconstruction efforts performed for this Program; and

(iii) Upon request by the Secretary of Health and Human Services, advise the Secretary on whether there is a class of employees at any Department of Energy facility who were exposed to radiation but for whom it is not feasible to estimate their radiation dose, and on whether there is a reasonable likelihood that such radiation dose may have endangered the health of members of the class.

Sec. 5. *Reporting Requirements.* The Secretaries of Labor, Health and Human Services, and Energy shall, as part of their annual budget submissions, report to the Office of Management and Budget (OMB) on their activities under this Program, including total expenditures related to benefits and program administration. They shall also report to the OMB, no later than March 1, 2001, on the manner in which they will carry out their respective responsibilities under the Act and this order. This report shall include, among other things, a description of the administrative structure established within their agencies to implement the Act and this order. In addition, the Secretary of Labor shall annually report on the total number and types of claims for which compensation was considered and other data pertinent to evaluating the Federal Government's performance fulfilling the requirements of the Act and this order.

Sec. 6. *Administration and Judicial Review.* (a) This Executive Order shall be carried out subject to the availability of appropriations, and to the extent permitted by law.

(b) This Executive Order does not create any right or benefit, substantive or procedural, enforceable at law or equity by a party against the United States, its agencies, its officers or employees, or any other person.

THE WHITE HOUSE,
December 7, 2000.

[FR Doc. 00–31692
Filed 12–8–00; 8:45 am]
Billing code 3195–01–P

Federal Register

Monday,
December 11, 2000

Part VII

The President

Executive Order 13180—Air Traffic Performance-Based Organization

Federal Register
Vol. 65, No. 238
Monday, December 11, 2000

Presidential Documents

Title 3—

The President

Executive Order 13180 of December 7, 2000

Air Traffic Performance-Based Organization

By the authority vested in me as President by the Constitution and the laws of the United States of America, and in order to further improve the provision of air traffic services, an inherently governmental function, in ways that increase efficiency, take better advantage of new technologies, accelerate modernization efforts, and respond more effectively to the needs of the traveling public, while enhancing the safety, security, and efficiency of the Nation's air transportation system, it is hereby ordered as follows:

Section 1. *Establishment of the Air Traffic Organization.* (a) The Secretary of Transportation (Secretary) shall, consistent with his legal authorities, move to establish within the Federal Aviation Administration (FAA) a performance-based organization to be known as the ''Air Traffic Organization'' (ATO).

(b) The ATO shall be composed of those elements of the FAA's Air Traffic Services and Research and Acquisition organizations that have direct connection and give support to the provision of day-to-day operational air traffic services, as determined by the Administrator of the Federal Aviation Administration (Administrator). The Administrator may delegate responsibility for any operational activity of the air traffic control system to the head of the ATO. The Administrator's responsibility for general safety, security, and policymaking functions for the National Airspace System is unaffected by this order.

(c) The Chief Operating Officer (COO) of the Air Traffic Control System, established by the Wendell H. Ford Aviation Investment and Reform Act for the 21st Century (Air-21) (Public Law 106-181), shall head the ATO and shall report directly to the Administrator and be subject to the authority of the Administrator. The COO, in consultation with the Air Traffic Control Subcommittee of the Aviation Management Advisory Committee, shall enter into an annual performance agreement with the Administrator that sets forth measurable organization and individual goals in key operational areas and describes specific targets and how such goals will be achieved. The COO may receive an annual bonus not to exceed 30 percent of the annual rate of basic pay, based upon the Administrator's evaluation of the COO's performance in relation to the targets and goals described above.

(d) The COO shall develop a 5-year strategic plan for the air traffic control system, including a clear statement of the mission and objectives for the system's safety, efficiency, and productivity. This strategic plan must ensure that ATO actions are consistent with long-term FAA strategies for the aviation system as a whole.

(e) The COO shall also enter into a framework agreement with the Administrator that will establish the relationship of the ATO with the other organizations of the FAA.

Sec. 2. *Purpose.* The FAA's primary mission is to ensure the safety, security, and efficiency of the National Airspace System. The purpose of this order is to enhance that mission and further improve the delivery of air traffic services to the American public by reorganizing the FAA's air traffic services and related offices into a performance-based, results-oriented, organization. The ATO will be better able to make use of the unique procurement and personnel authorities that the FAA currently has and to better use the additional management reforms enacted by the Congress this year under Air-21. Specifically, the ATO shall:

(a) optimize use of existing management flexibilities and authorities to improve the efficiency of air traffic services and increase the capacity of the system;

(b) develop methods to accelerate air traffic control modernization and to improve aviation safety related to air traffic control;

(c) develop agreements with the Administrator of the FAA and users of the products, services, and capabilities it will provide;

(d) operate in accordance with safety performance standards developed by the FAA and rapidly respond to FAA safety and security oversight findings;

(e) consult with its customers, the traveling public, including direct users such as airlines, cargo carriers, manufacturers, airports, general aviation, and commercial space transportation providers, and focus on producing results that satisfy the FAA's external customer needs;

(f) consult with appropriate Federal, State, and local public agencies, including the Department of Defense and the National Aeronautics and Space Administration, to determine the best practices for meeting the diverse needs throughout the National Airspace System;

(g) establish strong incentives to managers for achieving results; and

(h) formulate and recommend to the Administrator any management, fiscal, or legislative changes necessary for the organization to achieve its performance goals.

Sec. 3. *Aviation Management Advisory Committee.* The Air Traffic Control Subcommittee of the Aviation Management Advisory Committee shall provide, consistent with its responsibilities under Air-21, general oversight to ATO regarding the administration, management, conduct, direction, and supervision of the air traffic control system.

Sec. 4. *Evaluation and Report.* Not later than 5 years after the date of this order, the Aviation Management Advisory Committee shall provide to the Secretary and the Administrator a report on the operation and effectiveness of the ATO, together with any recommendations for management, fiscal, or legislative changes to enable the organization to achieve its goals.

Sec. 5. *Definitions.* The term ''air traffic control system'' has the same meaning as the term defined by section 40102(a)(42) of title 49, United States Code.

Sec. 6. *Judicial Review.* This order does not create any right or benefit, substantive or procedural, enforceable at law by a party against the United States, its agencies, its officers, or any person.

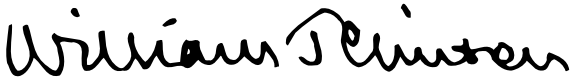

THE WHITE HOUSE,
December 7, 2000.

[FR Doc. 00–31697
Filed 12–8–00; 11:15 am]
Billing code 3195–01–P

Reader Aids

Federal Register

Vol. 65, No. 238

Monday, December 11, 2000

CUSTOMER SERVICE AND INFORMATION

Federal Register/Code of Federal Regulations

General Information, indexes and other finding aids	**202–523–5227**
Laws	**523–5227**

Presidential Documents

Executive orders and proclamations	**523–5227**
The United States Government Manual	**523–5227**

Other Services

Electronic and on-line services (voice)	**523–4534**
Privacy Act Compilation	**523–3187**
Public Laws Update Service (numbers, dates, etc.)	**523–6641**
TTY for the deaf-and-hard-of-hearing	**523–5229**

ELECTRONIC RESEARCH

World Wide Web

Full text of the daily Federal Register, CFR and other publications:

http://www.access.gpo.gov/nara

Federal Register information and research tools, including Public Inspection List, indexes, and links to GPO Access:

http://www.nara.gov/fedreg

E-mail

PENS (Public Law Electronic Notification Service) is an E-mail service for notification of recently enacted Public Laws. To subscribe, send E-mail to

listserv@www.gsa.gov

with the text message:

subscribe PUBLAWS-L your name

Use listserv@www.gsa.gov only to subscribe or unsubscribe to PENS. We cannot respond to specific inquiries.

Reference questions. Send questions and comments about the Federal Register system to:

info@fedreg.nara.gov

The Federal Register staff cannot interpret specific documents or regulations.

FEDERAL REGISTER PAGES AND DATE, DECEMBER

75153–75580 1
75581–75852 4
75853–76114 5
76115–76560 6
76561–76914 7
76915–77244 8
77245–77494 11

CFR PARTS AFFECTED DURING DECEMBER

At the end of each month, the Office of the Federal Register publishes separately a List of CFR Sections Affected (LSA), which lists parts and sections affected by documents published since the revision date of each title.

3 CFR

Proclamations:
5030 (See EO 13178) 76913
5928 (See EO 13178) 76913
6425 (See Proc. 7383) 76551
7219 (See EO 13178) 76913
7382 ..... 75851, 76348
7383 76551
7384 76903

Executive Orders:
April 17, 1926 (Revoked in part by PLO 7470) 76663
11888 (See Proc. 7383) 76551
13089 (See EO 13178) 76913
13158 (See EO 13178) 76913
13177 76558
13178 76913
13179 77487
13180 77493

5 CFR

531 75153

7 CFR

59 75464
246 77245
773 76115
774 76115
1792 76915

Proposed Rules:
15 76115
15b 76115
301 76582
319 75187
930 77323
1000 76832
1001 76832
1005 76832
1006 76832
1007 76832
1030 76832
1032 76832
1033 76832
1124 76832
1126 76832
1131 76832
1135 76832

8 CFR

Proposed Rules:
208 ..... 76121, 76588

9 CFR

78 75581

Proposed Rules:
1 75635
381 75187
424 75187

10 CFR

72 ..... 75869, 76896
440 77210

Proposed Rules:
4 76480
72 ..... 75869, 76899
50 76178
430 75196
1040 76480

11 CFR

100 76138
109 76138
110 76138

12 CFR

3 75856
8 75859
14 75822
19 77250
208 ..... 75822, 75856
225 75856
325 75856
343 75822
536 75822

Proposed Rules:
3 76180
5 ..... 75870, 75872
8 75196
9 75872
208 76180
225 76180
325 76180
567 76180

13 CFR

Proposed Rules:
112 76480
117 76480
121 76184

14 CFR

25 ..... 76147, 77252
39 ..... 75582, 75585, 75588, 75590, 75592, 75595, 75597, 75599, 75601, 75603, 75605, 75608, 75610, 75611, 75613, 75615, 75617, 75618, 75620, 75624, 75625, 76149, 77259, 77261, 77263
71 ..... 76150, 77282
73 76151

Proposed Rules:
39 ..... 75198, 75877, 75879, 75881, 75883, 75887, 76185, 76187, 76950, 76953
1250 76460
1251 76460

1252 76460

15 CFR

736 76561
744 76561
801 77282
902 77450
930 77124
Proposed Rules:
8 76460
8b 76460
20 76460

16 CFR

300 75154
303 75154

17 CFR

210 76012
240 ..... 75414, 75439, 76012
242 76562
270 76189

18 CFR

11 76916
33 76009
284 ..... 75628, 77285
Proposed Rules:
1302 76460
1307 76460
1309 76460

21 CFR

16 76096
73 75158
101 76096
115 76096
179 76096
510 76924
514 76924
556 76930
558 76924
876 76930
Proposed Rules:
101 75887
1308 77328

22 CFR

Proposed Rules:
141 76460
142 76460
143 76460
209 76460
217 76460
218 76460

24 CFR

5 77230
200 77230
Proposed Rules:
30 76520

25 CFR

20 76563
Proposed Rules:
580 75888

26 CFR

1 76932
31 76152
Proposed Rules:
1 76194
31 76194

28 CFR

16 ..... 75158, 75159
Proposed Rules:
16 75201
42 76460

29 CFR

1625 77438
1910 76563
4006 ..... 75160, 77429
4007 ..... 75160, 77429
4011 75164
4022 75164
4044 75165
Proposed Rules:
31 76460
32 76460
1910 76598

30 CFR

42 77292
47 77292
56 77292
57 77292
77 77292
250 76933
Proposed Rules:
938 76954
948 75889

31 CFR

1 76009
Ch. V 75629

32 CFR

Proposed Rules:
311 75897

33 CFR

100 76153
117 ..... 76154, 76935
Proposed Rules:
97 75201
117 76956
165 76195

34 CFR

373 77432

37 CFR

1 76756
201 77292
253 75167
Proposed Rules:
201 77330

38 CFR

1 76937
Proposed Rules:
18 76460
36 76957

39 CFR

20 ..... 76154, 77076, 77302
111 ..... 75167, 75863
Proposed Rules:
111 75210

40 CFR

9 76708
52 ..... 76567, 76938, 77307, 77308
60 ..... 75338, 76350. 76378
63 76941
81 77308
141 76708
142 76708
180 ..... 75168, 75174, 76169, 76171
300 ..... 75179, 76945
Proposed Rules:
7 76460
52 ..... 75215, 76197, 76958
55 77333
63 ..... 76460, 76958
81 76303
86 76797
94 76797
261 ..... 75637, 75897, 77429
268 75651
300 ..... 75215, 76965
1048 76797
1051 76797

41 CFR

Proposed Rules:
101-6 76460
101-8 76460

42 CFR

Proposed Rules:
36 75906

43 CFR

Proposed Rules:
17 76460

44 CFR

64 75632
Proposed Rules:
7 76460
67 75908

45 CFR

270 75633
276 75633
Proposed Rules:
605 76460
611 76460
617 76460
1110 76460
1151 76460
1156 76460
1170 76460
1203 76460
1232 76460

46 CFR

67 76572

47 CFR

73 ..... 76947, 76948, 77318
76 76948
Proposed Rules:
43 75656
73 ..... 75221, 75222, 762096, 76207, 77338
80 76966

48 CFR

1504 75863
1552 75863
Proposed Rules:
1842 76600
1852 76600

49 CFR

195 75378
611 76864
1002 ..... 76174, 77319
Proposed Rules:
21 76460
27 76460
107 76890
195 76968
567 75222
571 ..... 75222, 77339
574 75222
575 75222

50 CFR

20 76886
230 75186
300 75866
600 77450
635 75867
648 ..... 76577, 76578, 77450, 77470
679 ..... 76175, 76578
Proposed Rules:
17 ..... 76207, 77178
216 75230
600 ..... 75911, 75912
635 76601
648 ..... 75232, 75912
697 75916

REMINDERS

The items in this list were editorially compiled as an aid to Federal Register users. Inclusion or exclusion from this list has no legal significance.

RULES GOING INTO EFFECT DECEMBER 11, 2000

COMMERCE DEPARTMENT

National Oceanic and Atmospheric Administration

Fishery conservation and management:

Alaska; fisheries of Exclusive Economic Zone—

Sitka Pinnacles Marine Reserve designation; published 11-9-00

ENERGY DEPARTMENT

Nuclear safety management; contractor- and government-operated nuclear facilities; published 10-10-00

ENVIRONMENTAL PROTECTION AGENCY

Air quality planning purposes; designation of areas:

California; published 10-11-00

FEDERAL COMMUNICATIONS COMMISSION

Radio broadcasting:

Low power FM radio service; creation and operation; published 11-9-00

Correction; published 11-17-00

Radio stations; table of assignments:

California; published 11-13-00

Montana; published 11-9-00

Nebraska; published 11-13-00

New Mexico; published 11-9-00

North Carolina; published 11-13-00

Oregon; published 11-13-00

Pennsylvania; published 11-13-00

Texas; published 11-13-00

Washington; published 11-13-00

Wyoming; published 11-9-00

HEALTH AND HUMAN SERVICES DEPARTMENT

Health Care Financing Administration

Medicare:

Durable medical equipment, prosthetics, othotics, and supplies; supplier standards; published 10-11-00

LIBRARY OF CONGRESS

Copyright Office, Library of Congress

Sound recordings, publicly performed, of nonexempt digital subscription transmissions; definition of a ≥Service≥; published 12-11-00

TRANSPORTATION DEPARTMENT

Coast Guard

Drawbridge operations:

Connecticut; published 12-6-00

Regattas and marine parades:

Charleston Christmas Parade of Boats; published 11-9-00

TRANSPORTATION DEPARTMENT

Federal Aviation Administration

Airworthiness directives:

British Aerospace; published 11-6-00

CFM International; published 6-13-00

Empresa Brasileira de Aeronautica, S.A.; published 11-6-00

TREASURY DEPARTMENT

Comptroller of the Currency

Practice and procedure:

Civil money penalties; inflation adjustment; published 12-11-00

COMMENTS DUE NEXT WEEK

AGRICULTURE DEPARTMENT

Animal and Plant Health Inspection Service

Plant-related quarantine, foreign:

Artificially dwarfed plants in growing media from China; comments due by 12-20-00; published 12-1-00

AGRICULTURE DEPARTMENT

Federal Crop Insurance Corporation

Crop insurance regulations:

Sugarcane; comments due by 12-18-00; published 10-18-00

COMMERCE DEPARTMENT

National Oceanic and Atmospheric Administration

Fishery conservation and management:

Magnuson-Stevens Act provisions—

Domestic fisheries; exempted fishing permits; comments due by 12-20-00; published 12-5-00

Northeastern United States fisheries—

Summer flounder, scup, and black sea bass; comments due by 12-19-00; published 11-28-00

West Coast States and Western Pacific fisheries—

Western Pacific pelagic; comments due by 12-18-00; published 11-3-00

International fisheries regulations:

Fraser River sockeye and pink salmon; inseason orders; comments due by 12-20-00; published 12-5-00

ENVIRONMENTAL PROTECTION AGENCY

Air pollutants, hazardous; national emission standards:

Rubber tire manufacturing facilities; comments due by 12-18-00; published 10-18-00

Air quality implementation plans; approval and promulgation; various States:

Massachusetts; comments due by 12-18-00; published 10-26-00

Texas; comments due by 12-20-00; published 11-20-00

Superfund program:

National oil and hazardous substances contingency plan—

National priorities list update; comments due by 12-22-00; published 11-22-00

National priorities list update; comments due by 12-22-00; published 11-22-00

FEDERAL COMMUNICATIONS COMMISSION

Common carrier services:

Incumbent local exchange carriers; accounting and ARMIS reporting requirements; comprehensive review; biennial regulatory review (Phases 2 and 3); comments due by 12-21-00; published 11-13-00

Frequency allocations and radio treaty matters:

3650-3700 MHz band and 4.9 GHz band; transfer from Federal Government use; comments due by 12-18-00; published 11-17-00

Radio stations; table of assignments:

Alabama; comments due by 12-18-00; published 11-13-00

Arizona; comments due by 12-18-00; published 11-13-00

Colorado and California; comments due by 12-18-00; published 11-13-00

Georgia; comments due by 12-18-00; published 11-13-00

Tennessee; comments due by 12-18-00; published 11-13-00

West Virginia; comments due by 12-18-00; published 11-13-00

Television broadcasting:

Children's television programming reports; filing requirements extension; comments due by 12-18-00; published 11-9-00

Commercial television station public interest obligations; standardized and enhanced disclosure; comments due by 12-18-00; published 10-19-00

Digital television broadcasters; children's television obligations; comments due by 12-18-00; published 11-8-00

HEALTH AND HUMAN SERVICES DEPARTMENT

Child Support Enforcement Office

Child support enforcement program:

Indian Tribe and Tribal organization funding; comments due by 12-19-00; published 8-21-00

HEALTH AND HUMAN SERVICES DEPARTMENT

Food and Drug Administration

Medical devices:

Anesthesiology devices—

Apnea monitor; special controls; comments due by 12-21-00; published 9-22-00

HEALTH AND HUMAN SERVICES DEPARTMENT

Health Care Financing Administration

Medicare:

Clinical social worker services; coverage and payment; comments due

by 12-18-00; published 10-19-00

HEALTH AND HUMAN SERVICES DEPARTMENT

Medical facility construction and modernization:

Uncompensated services; compliance alternatives; comments due by 12-18-00; published 10-19-00

INTERIOR DEPARTMENT

Indian Affairs Bureau

Tribal government:

Certificate of degree of Indian or Alaska Native blood; documentation requirements and filing, processing, and issuing requirements and standards; comments due by 12-20-00; published 10-30-00

INTERIOR DEPARTMENT

Fish and Wildlife Service

Endangered and threatened species:

Recovery plans—

Zayante band-winged grasshopper; comments due by 12-21-00; published 12-6-00

INTERIOR DEPARTMENT

Minerals Management Service

Royalty management:

Rate relief or reduction; deep water royalty relief for post-2000 OCS oil and gas leases; comments due by 12-18-00; published 11-16-00

Correction; comments due by 12-18-00; published 11-22-00

MANAGEMENT AND BUDGET OFFICE

Federal Procurement Policy Office

Acquisition regulations:

Cost Accounting Standards Board—

Post retirement benefit plans sponsored by government contractors; cost accounting standard; comments due by 12-19-00; published 10-5-00

PERSONNEL MANAGEMENT OFFICE

Employment:

Reduction in force—

Retreat rights; comments due by 12-19-00; published 10-20-00

SOCIAL SECURITY ADMINISTRATION

Supplemental security income:

Aged, blind, and disabled—

Consumer reporting agencies information disclosure; administrative offset against Federal payment; comments due by 12-22-00; published 10-23-00

TRANSPORTATION DEPARTMENT

Coast Guard

Ports and waterways safety:

New York annual fireworks displays, NY; safety zones; comments due by 12-18-00; published 11-2-00

TRANSPORTATION DEPARTMENT

Federal Aviation Administration

Airworthiness directives:

Israel Aircraft Industries, Ltd.; comments due by 12-18-00; published 11-17-00

McDonnell Douglas; comments due by 12-20-00; published 11-20-00

Pratt & Whitney; comments due by 12-18-00; published 11-16-00

Airworthiness standards:

Special conditions—

Bombardier Model CL-600-2C10 series airplanes; comments due by 12-18-00; published 11-3-00

Class E airspace; comments due by 12-22-00; published 11-22-00

Commercial space transportation:

Launch site operation; licensing and safety requirements; solid propellants handling and cooperation with National Transportation Safety Board; comments due by 12-18-00; published 10-19-00

TRANSPORTATION DEPARTMENT

National Highway Traffic Safety Administration

Motor vehicle safety standards:

Child restraint systems—

Safety plan; comments due by 12-22-00; published 11-27-00

TRANSPORTATION DEPARTMENT

Research and Special Programs Administration

Hazardous materials:

Hazardous materials transportation—

Harmonization with UN recommendations, International Maritime Dangerous Goods Code, and International Civil Aviation Organization's Technical Instructions; comments due by 12-22-00; published 10-23-00

LIST OF PUBLIC LAWS

This is a continuing list of public bills from the current session of Congress which have become Federal laws. It may be used in conjunction with "P L U S" (Public Laws Update Service) on 202–523–6641. This list is also available online at http://www.nara.gov/fedreg.

The text of laws is not published in the **Federal Register** but may be ordered in "slip law" (individual pamphlet) form from the Superintendent of Documents, U.S. Government Printing Office, Washington, DC 20402 (phone, 202–512–1808). The text will also be made available on the Internet from GPO Access at http://www.access.gpo.gov/nara/index.html. Some laws may not yet be available.

H.J. Res. 127/P.L. 106–539

Making further continuing appropriations for the fiscal year 2001, and for other purposes. (Dec. 7, 2000; 114 Stat. 2570)

Last List December 8, 2000

Public Laws Electronic Notification Service (PENS)

PENS is a free electronic mail notification service of newly enacted public laws. To subscribe, go to http://hydra.gsa.gov/archives/publaws-l.html or send E-mail to **listserv@listserv.gsa.gov** with the following text message:

SUBSCRIBE PUBLAWS-L Your Name.

Note: This service is strictly for E-mail notification of new laws. The text of laws is not available through this service. **PENS** cannot respond to specific inquiries sent to this address.

CFR CHECKLIST

This checklist, prepared by the Office of the Federal Register, is published weekly. It is arranged in the order of CFR titles, stock numbers, prices, and revision dates.

An asterisk (*) precedes each entry that has been issued since last week and which is now available for sale at the Government Printing Office.

A checklist of current CFR volumes comprising a complete CFR set, also appears in the latest issue of the LSA (List of CFR Sections Affected), which is revised monthly.

The CFR is available free on-line through the Government Printing Office's GPO Access Service at http://www.access.gpo.gov/nara/cfr/index.html. For information about GPO Access call the GPO User Support Team at 1-888-293-6498 (toll free) or 202-512-1530.

The annual rate for subscription to all revised paper volumes is $951.00 domestic, $237.75 additional for foreign mailing.

Mail orders to the Superintendent of Documents, Attn: New Orders, P.O. Box 371954, Pittsburgh, PA 15250–7954. All orders must be accompanied by remittance (check, money order, GPO Deposit Account, VISA, Master Card, or Discover). Charge orders may be telephoned to the GPO Order Desk, Monday through Friday, at **(202) 512–1800** from 8:00 a.m. to 4:00 p.m. eastern time, or FAX your charge orders to **(202) 512-2250**.

Title	Stock Number	Price	Revision Date
1, 2 (2 Reserved)	(869–038–00001–3)	6.50	Apr. 1, 2000
3 (1997 Compilation and Parts 100 and 101)	(869–042–00002–1)	22.00	[1] Jan. 1, 2000
4	(869–042–00003–0)	8.50	Jan. 1, 2000
5 Parts:			
1–699	(869–042–00004–8)	43.00	Jan. 1, 2000
700–1199	(869–042–00005–6)	31.00	Jan. 1, 2000
1200–End, 6 (6 Reserved)	(869–042–00006–4)	48.00	Jan. 1, 2000
7 Parts:			
1–26	(869–042–00007–2)	28.00	Jan. 1, 2000
27–52	(869–042–00008–1)	35.00	Jan. 1, 2000
53–209	(869–042–00009–9)	22.00	Jan. 1, 2000
210–299	(869–042–00010–2)	54.00	Jan. 1, 2000
300–399	(869–042–00011–1)	29.00	Jan. 1, 2000
400–699	(869–042–00012–9)	41.00	Jan. 1, 2000
700–899	(869–042–00013–7)	37.00	Jan. 1, 2000
900–999	(869–042–00014–5)	46.00	Jan. 1, 2000
1000–1199	(869–042–00015–3)	18.00	Jan. 1, 2000
1200–1599	(869–042–00016–1)	44.00	Jan. 1, 2000
1600–1899	(869–042–00017–0)	61.00	Jan. 1, 2000
1900–1939	(869–042–00018–8)	21.00	Jan. 1, 2000
1940–1949	(869–042–00019–6)	37.00	Jan. 1, 2000
1950–1999	(869–042–00020–0)	38.00	Jan. 1, 2000
2000–End	(869–042–00021–8)	31.00	Jan. 1, 2000
8	(869–042–00022–6)	41.00	Jan. 1, 2000
9 Parts:			
1–199	(869–042–00023–4)	46.00	Jan. 1, 2000
200–End	(869–042–00024–2)	44.00	Jan. 1, 2000
10 Parts:			
1–50	(869–042–00025–1)	46.00	Jan. 1, 2000
51–199	(869–042–00026–9)	38.00	Jan. 1, 2000
200–499	(869–042–00027–7)	38.00	Jan. 1, 2000
500–End	(869–042–00028–5)	48.00	Jan. 1, 2000
11	(869–042–00029–3)	23.00	Jan. 1, 2000
12 Parts:			
1–199	(869–042–00030–7)	18.00	Jan. 1, 2000
200–219	(869–042–00031–5)	22.00	Jan. 1, 2000
220–299	(869–042–00032–3)	45.00	Jan. 1, 2000
300–499	(869–042–00033–1)	29.00	Jan. 1, 2000
500–599	(869–042–00034–0)	26.00	Jan. 1, 2000
600–End	(869–042–00035–8)	53.00	Jan. 1, 2000
13	(869–042–00036–6)	35.00	Jan. 1, 2000
14 Parts:			
1–59	(869–042–00037–4)	58.00	Jan. 1, 2000
60–139	(869–042–00038–2)	46.00	Jan. 1, 2000
140–199	(869–038–00039–1)	17.00	[4] Jan. 1, 2000
200–1199	(869–042–00040–4)	29.00	Jan. 1, 2000
1200–End	(869–042–00041–2)	25.00	Jan. 1, 2000
15 Parts:			
0–299	(869–042–00042–1)	28.00	Jan. 1, 2000
300–799	(869–042–00043–9)	45.00	Jan. 1, 2000
800–End	(869–042–00044–7)	26.00	Jan. 1, 2000
16 Parts:			
0–999	(869–042–00045–5)	33.00	Jan. 1, 2000
1000–End	(869–042–00046–3)	43.00	Jan. 1, 2000
17 Parts:			
1–199	(869–042–00048–0)	32.00	Apr. 1, 2000
200–239	(869–042–00049–8)	38.00	Apr. 1, 2000
240–End	(869–042–00050–1)	49.00	Apr. 1, 2000
18 Parts:			
1–399	(869–042–00051–0)	54.00	Apr. 1, 2000
400–End	(869–042–00052–8)	15.00	Apr. 1, 2000
19 Parts:			
1–140	(869–042–00053–6)	40.00	Apr. 1, 2000
141–199	(869–042–00054–4)	40.00	Apr. 1, 2000
200–End	(869–042–00055–2)	20.00	Apr. 1, 2000
20 Parts:			
1–399	(869–042–00056–1)	33.00	Apr. 1, 2000
400–499	(869–042–00057–9)	56.00	Apr. 1, 2000
500–End	(869–042–00058–7)	58.00	Apr. 1, 2000
21 Parts:			
1–99	(869–042–00059–5)	26.00	Apr. 1, 2000
100–169	(869–042–00060–9)	30.00	Apr. 1, 2000
170–199	(869–042–00061–7)	29.00	Apr. 1, 2000
200–299	(869–042–00062–5)	13.00	Apr. 1, 2000
300–499	(869–042–00063–3)	20.00	Apr. 1, 2000
500–599	(869–042–00064–1)	31.00	Apr. 1, 2000
600–799	(869–038–00065–0)	10.00	Apr. 1, 2000
800–1299	(869–042–00066–8)	38.00	Apr. 1, 2000
1300–End	(869–042–00067–6)	15.00	Apr. 1, 2000
22 Parts:			
1–299	(869–042–00068–4)	54.00	Apr. 1, 2000
300–End	(869–042–00069–2)	31.00	Apr. 1, 2000
23	(869–042–00070–6)	29.00	Apr. 1, 2000
24 Parts:			
0–199	(869–042–00071–4)	40.00	Apr. 1, 2000
200–499	(869–042–00072–2)	37.00	Apr. 1, 2000
500–699	(869–042–00073–1)	20.00	Apr. 1, 2000
700–1699	(869–042–00074–9)	46.00	Apr. 1, 2000
1700–End	(869–042–00075–7)	18.00	[5] Apr. 1, 2000
25	(869–042–00076–5)	52.00	Apr. 1, 2000
26 Parts:			
§§ 1.0-1–1.60	(869–042–00077–3)	31.00	Apr. 1, 2000
§§ 1.61–1.169	(869–042–00078–1)	56.00	Apr. 1, 2000
§§ 1.170–1.300	(869–042–00079–0)	38.00	Apr. 1, 2000
§§ 1.301–1.400	(869–042–00080–3)	29.00	Apr. 1, 2000
§§ 1.401–1.440	(869–042–00081–1)	47.00	Apr. 1, 2000
§§ 1.441-1.500	(869-042-00082-0)	36.00	Apr. 1, 2000
§§ 1.501–1.640	(869–042–00083–8)	32.00	Apr. 1, 2000
§§ 1.641–1.850	(869–042–00084–6)	41.00	Apr. 1, 2000
§§ 1.851–1.907	(869–042–00085–4)	43.00	Apr. 1, 2000
§§ 1.908–1.1000	(869–042–00086–2)	41.00	Apr. 1, 2000
§§ 1.1001–1.1400	(869–042–00087–1)	45.00	Apr. 1, 2000
§§ 1.1401–End	(869–042–00088–9)	66.00	Apr. 1, 2000
2–29	(869–042–00089–7)	45.00	Apr. 1, 2000
30–39	(869–042–00090–1)	31.00	Apr. 1, 2000
40–49	(869–042–00091–9)	18.00	Apr. 1, 2000
50–299	(869–042–00092–7)	23.00	Apr. 1, 2000
300–499	(869–042–00093–5)	43.00	Apr. 1, 2000
500–599	(869–042–00094–3)	12.00	Apr. 1, 2000
600–End	(869–042–00095–1)	12.00	Apr. 1, 2000
27 Parts:			
1–199	(869–042–00096–0)	59.00	Apr. 1, 2000

Title	Stock Number	Price	Revision Date
200–End	(869–042–00097–8)	18.00	Apr. 1, 2000
28 Parts:			
0-42	(869–042–00098–6)	43.00	July 1, 2000
43-end	(869-042-00099-4)	36.00	July 1, 2000
29 Parts:			
0–99	(869–042–00100–1)	33.00	July 1, 2000
100–499	(869–042–00101–0)	14.00	July 1, 2000
500–899	(869–042–00102–8)	47.00	July 1, 2000
900–1899	(869–042–00103–6)	24.00	July 1, 2000
1900–1910 (§§ 1900 to 1910.999)	(869–042–00104–4)	46.00	[6]July 1, 2000
1910 (§§ 1910.1000 to end)	(869–042–00105–2)	28.00	[6]July 1, 2000
1911–1925	(869–042–00106–1)	20.00	July 1, 2000
1926	(869–042–00107–9)	30.00	[6]July 1, 2000
1927–End	(869–042–00108–7)	49.00	July 1, 2000
30 Parts:			
1–199	(869–042–00109–5)	38.00	July 1, 2000
200–699	(869–042–00110–9)	33.00	July 1, 2000
700–End	(869–042–00111–7)	39.00	July 1, 2000
31 Parts:			
0–199	(869–042–00112–5)	23.00	July 1, 2000
200–End	(869–042–00113–3)	53.00	July 1, 2000
32 Parts:			
1–39, Vol. I		15.00	[2] July 1, 1984
1–39, Vol. II		19.00	[2] July 1, 1984
1–39, Vol. III		18.00	[2] July 1, 1984
1–190	(869–042–00114–1)	51.00	July 1, 2000
191–399	(869–042–00115–0)	62.00	July 1, 2000
400–629	(869–042–00116–8)	35.00	July 1, 2000
630–699	(869–042–00117–6)	25.00	July 1, 2000
700–799	(869–042–00118–4)	31.00	July 1, 2000
800–End	(869–042–00119–2)	32.00	July 1, 2000
33 Parts:			
1–124	(869–042–00120–6)	35.00	July 1, 2000
125–199	(869–042–00121–4)	45.00	July 1, 2000
200–End	(869–042–00122–5)	36.00	July 1, 2000
34 Parts:			
1–299	(869–042–00123–1)	31.00	July 1, 2000
300–399	(869–042–00124–9)	28.00	July 1, 2000
400–End	(869–042–00125–7)	54.00	July 1, 2000
35	(869–042–00126–5)	10.00	July 1, 2000
36 Parts			
1–199	(869–042–00127–3)	24.00	July 1, 2000
200–299	(869–042–00128–1)	24.00	July 1, 2000
300–End	(869–042–00129–0)	43.00	July 1, 2000
37	(869–042–00130–3)	32.00	July 1, 2000
38 Parts:			
0–17	(869–042–00131–1)	40.00	July 1, 2000
18–End	(869–042–00132–0)	47.00	July 1, 2000
39	(869–042–00133–8)	28.00	July 1, 2000
40 Parts:			
1–49	(869–042–00134–6)	37.00	July 1, 2000
50–51	(869–042–00135–4)	28.00	July 1, 2000
52 (52.01–52.1018)	(869–042–00136–2)	36.00	July 1, 2000
52 (52.1019–End)	(869–042–00137–1)	44.00	July 1, 2000
53–59	(869–042–00138–9)	21.00	July 1, 2000
60	(869–042–00139–7)	66.00	July 1, 2000
61–62	(869–042–00140–1)	23.00	July 1, 2000
63 (63.1–63.1119)	(869–042–00141–9)	66.00	July 1, 2000
63 (63.1200–End)	(869–042–00142–7)	49.00	July 1, 2000
64–71	(869–042–00143–5)	12.00	July 1, 2000
72–80	(869–042–00144–3)	47.00	July 1, 2000
81–85	(869–042–00145–1)	36.00	July 1, 2000
86	(869–042–00146–0)	66.00	July 1, 2000
87-135	(869–042–00146–8)	66.00	July 1, 2000
136–149	(869–042–00148–6)	42.00	July 1, 2000
150–189	(869–042–00149–4)	38.00	July 1, 2000
190–259	(869–042–00150–8)	25.00	July 1, 2000
260–265	(869–042–00151–6)	36.00	July 1, 2000
266–299	(869–042–00152–4)	35.00	July 1, 2000
300–399	(869–042–00153–2)	29.00	July 1, 2000
400–424	(869–042–00154–1)	37.00	July 1, 2000
425–699	(869–042–00155–9)	48.00	July 1, 2000
700–789	(869–042–00156–7)	46.00	July 1, 2000
790–End	(869–042–00157–5)	23.00	[6]July 1, 2000
41 Chapters:			
1, 1–1 to 1–10		13.00	[3] July 1, 1984
1, 1–11 to Appendix, 2 (2 Reserved)		13.00	[3] July 1, 1984
3–6		14.00	[3] July 1, 1984
7		6.00	[3] July 1, 1984
8		4.50	[3] July 1, 1984
9		13.00	[3] July 1, 1984
10–17		9.50	[3] July 1, 1984
18, Vol. I, Parts 1–5		13.00	[3] July 1, 1984
18, Vol. II, Parts 6–19		13.00	[3] July 1, 1984
18, Vol. III, Parts 20–52		13.00	[3] July 1, 1984
19–100		13.00	[3] July 1, 1984
1–100	(869–042–00158–3)	15.00	July 1, 2000
101	(869–042–00159–1)	37.00	July 1, 2000
102–200	(869–042–00160–5)	21.00	July 1, 2000
201–End	(869–042–00161–3)	16.00	July 1, 2000
42 Parts:			
1–399	(869–038–00162–4)	36.00	Oct. 1, 1999
400–429	(869–038–00163–2)	44.00	Oct. 1, 1999
430–End	(869–038–00164–1)	54.00	Oct. 1, 1999
43 Parts:			
1–999	(869–038–00165–9)	32.00	Oct. 1, 1999
1000–end	(869–038–00166–7)	47.00	Oct. 1, 1999
44	(869–038–00167–5)	28.00	Oct. 1, 1999
45 Parts:			
1–199	(869–038–00168–3)	33.00	Oct. 1, 1999
200–499	(869–038–00169–1)	16.00	Oct. 1, 1999
500–1199	(869–042–00170–2)	45.00	Oct. 1, 2000
1200–End	(869–038–00171–3)	40.00	Oct. 1, 1999
46 Parts:			
1–40	(869–038–00172–1)	27.00	Oct. 1, 1999
41–69	(869–038–00173–0)	23.00	Oct. 1, 1999
70–89	(869–038–00174–8)	8.00	Oct. 1, 1999
90–139	(869–038–00175–6)	26.00	Oct. 1, 1999
140–155	(869–038–00176–4)	15.00	Oct. 1, 1999
156–165	(869–038–00177–2)	21.00	Oct. 1, 1999
166–199	(869–038–00178–1)	27.00	Oct. 1, 1999
200–499	(869–038–00179–9)	23.00	Oct. 1, 1999
500–End	(869–042–00180–0)	23.00	Oct. 1, 2000
47 Parts:			
0–19	(869–038–00181–1)	39.00	Oct. 1, 1999
20–39	(869–038–00182–9)	26.00	Oct. 1, 1999
40–69	(869–038–00183–7)	26.00	Oct. 1, 1999
70–79	(869–038–00184–5)	39.00	Oct. 1, 1999
80–End	(869–038–00185–3)	40.00	Oct. 1, 1999
48 Chapters:			
1 (Parts 1–51)	(869–038–00186–1)	55.00	Oct. 1, 1999
1 (Parts 52–99)	(869–038–00187–0)	30.00	Oct. 1, 1999
2 (Parts 201–299)	(869–038–00188–8)	36.00	Oct. 1, 1999
*3–6	(869–038–00189–3)	40.00	Oct. 1, 2000
7–14	(869–038–00190–0)	35.00	Oct. 1, 1999
15–28	(869–038–00191–8)	36.00	Oct. 1, 1999
29–End	(869–038–00192–6)	25.00	Oct. 1, 1999
49 Parts:			
1–99	(869–038–00193–4)	34.00	Oct. 1, 1999
100–185	(869–038–00194–2)	53.00	Oct. 1, 1999
186–199	(869–038–00195–1)	13.00	Oct. 1, 1999
200–399	(869–038–00196–9)	53.00	Oct. 1, 1999
400–999	(869–038–00197–7)	57.00	Oct. 1, 1999
1000–1199	(869–038–00198–5)	17.00	Oct. 1, 1999
1200–End	(869–042–00199–1)	21.00	Oct. 1, 2000
50 Parts:			
1–199	(869–038–00200–1)	43.00	Oct. 1, 1999
200–599	(869–038–00201–9)	22.00	Oct. 1, 1999

Title	Stock Number	Price	Revision Date
600–End	(869–038–00202–7)	37.00	Oct. 1, 1999
CFR Index and Findings Aids	(869–042–00047–1)	53.00	Jan. 1, 2000
Complete 1999 CFR set		951.00	1999
Microfiche CFR Edition:			
Subscription (mailed as issued)		290.00	1999
Individual copies		1.00	1999
Complete set (one-time mailing)		247.00	1997
Complete set (one-time mailing)		264.00	1996

[1] Because Title 3 is an annual compilation, this volume and all previous volumes should be retained as a permanent reference source.

[2] The July 1, 1985 edition of 32 CFR Parts 1–189 contains a note only for Parts 1–39 inclusive. For the full text of the Defense Acquisition Regulations in Parts 1–39, consult the three CFR volumes issued as of July 1, 1984, containing those parts.

[3] The July 1, 1985 edition of 41 CFR Chapters 1–100 contains a note only for Chapters 1 to 49 inclusive. For the full text of procurement regulations in Chapters 1 to 49, consult the eleven CFR volumes issued as of July 1, 1984 containing those chapters.

[4] No amendments to this volume were promulgated during the period January 1, 1999, through January 1, 2000. The CFR volume issued as of January 1, 1999 should be retained.

[5] No amendments to this volume were promulgated during the period April 1, 1999, through April 1, 2000. The CFR volume issued as of April 1, 1999 should be retained.

[6] No amendments to this volume were promulgated during the period July 1, 1999, through July 1, 2000. The CFR volume issued as of July 1, 1999 should be retained.