SUPPLEMENTARY INFORMATION: The FAA proposes to rule and invites public comment on the application to impose and use the revenue from a PFC at Wilkes-Barre/Scranton International Airport under the provisions of the Aviation Safety and Capacity Expansion Act of 1990 (Title IX of the Omnibus Budget Reconciliation Act of 1990) (Public Law 101–508) and Part 158 of the Federal Aviation Regulations (14 CFR Part 158).

On August 28, 2000, the FAA determined that the application to impose and use the revenue from a PFC submitted by the Luzerne and Lackawanna Counties By-County Board of Commissioners was substantially complete within the requirements of section 158.25 of Part 158. The FAA will approve or disapprove the application, in while or in part, no later than Nov. 23, 2000. The following is a brief overview of the application.

PFC Application No.: 00–03–C–00–AVP.

Level of the proposed PFC: $4.50.

Proposed charge effective date: January 1, 2001.

Proposed charge expiration date: July 31, 2010.

Total estimated PFC revenue: $10,794,855.

Brief description of proposed project(s):

- Construct New Passenger Terminal Facility
- Construction Access Roadways and Non-Revenue Surface Parking
- Construction Terminal Aircraft Parking Apron
- Architect/Engineering Inspection and Contingency Fees
- Construct Snow Removal Equipment Storage/Maintenance Building
- Airport Master Plan Update
- Design/Construct Perimeter Fence
- Design Runway Safety Areas
- Design/Reconstruct General Aviation ramp
- Purchase Snow Removal Equipment (Three plows/spreaders)

Class or classes of air carriers which the public agency has requested not be required to collect PFCs: Non-Scheduled/On-Demand Air Carriers, with seating capacity of less than 20 seats, filing DOT Form 1800–31.

Any person may inspect the application in person at the FAA office listed above under **FOR FURTHER INFORMATION CONTACT** and at the FAA regional airports office located at: 1 Aviation Plaza, Jamaica, New York 11434–4809.

In addition, any person may, upon request, inspect the application, notice and other documents germane to the application in person at the Luzerne and Lackawanna Counties By-County Board of Commissioners.

Issued in New York City, New York on August 28, 2000.

Thomas Felix,

Manager, Planning and Programming Branch, Eastern Region

[FR Doc. 00–24492 Filed 9–22–00; 8:45 am]

BILLING CODE 4910–13–M

DEPARTMENT OF TRANSPORTATION

National Highway Traffic Safety Administration

Denial of Motor Vehicle Defect Petition, DP00–001

AGENCY: National Highway Traffic Safety Administration (NHTSA), Department of Transportation.

ACTION: Denial of petition for a defect investigation.

SUMMARY: This notice sets forth the reasons for the denial of a petition submitted to NHTSA under 49 U.S.C. § 30162, requesting that the agency commence a proceeding to determine the existence of a defect related to motor vehicle safety. The petition is hereinafter identified as DP00–001.

FOR FURTHER INFORMATION CONTACT: Dr. George Chiang, Office of Defects Investigation, NHTSA, 400 Seventh Street, SW, Washington, D.C. 20590. Telephone: (202) 366–5206.

SUPPLEMENTARY INFORMATION: Mr. Dave Blum (petitioner), 5329 Eagles Nest Road, Fruitland Park, Florida 34731, submitted a petition to NHTSA by letter dated February 1, 2000, requesting that an investigation be initiated on trailer towing hitch platforms (receivers) and related hitch equipment for ''compatibility with National Highway Safety Standards for materials and construction specifications.''

Mr. Blum is a safety committee member of the Region 3 Wally Byam Caravan Club International Airstream travel club. He provided pictures and descriptions of four club members' tow vehicles with cracked Original Equipment Manufacturer hitch receivers. The tow vehicles were model years (MY) 1993, 1994, and 1997 General Motor Corporation Suburban Sport Utility Vehicles and a MY 1995 Dodge 2500 pickup truck.

NHTSA has reviewed and analyzed all available information. The result of this review and analysis is set forth in a Petition Analysis Report for DP00–001 and is published in its entirety as an appendix to this notice.

For the reasons presented in the petition analysis report, it is unlikely that NHTSA would issue an order concerning the notification and remedy of a safety-related defect at the conclusion of an investigation. Therefore, in view of the need to allocate and prioritize NHTSA's limited resources to best accomplish the agency's safety mission, the petition is denied.

Authority: 49 U.S.C. 30162(d); delegations of authority at CFR 1.50 and 501.8.

Kenneth N. Weinstein,

Associate Administrator for Safety Assurance.

Appendix—Petition Analysis—DP00–001

1.0 Introduction

Mr. Dave Blum (petitioner), Fruitland Park, Florida, submitted a petition to NHTSA by letter requesting that an investigation be initiated on trailer towing hitch receivers (platforms) and related hitching equipment ''to assess their compatibility with National Highway Safety Standards for materials and construction specifications.'' The petitioner, who is a member of the Wally Byam Caravan Club International (WBCCI) Airstream travel club safety committee stated that NHTSA's Office of Defects Investigation (ODI) should open an investigation concerning hitch receiver failure because the WBCCI Airstream travel club members allegedly inspected and found cracks in their hitch receivers.

2.0 Vehicle Information

2.1 Subject Vehicle

In his petition, Mr. Blum did not specify the make, model, or year of vehicles he wanted ODI to investigate. However, between December 1999 and January 2000, he supplied information concerning cracked hitch receivers on a 1993, 1994, and 1997 model year (MY) General Motor Corporation (GM) Suburban vehicle and on a 1995 MY Dodge 2500 pickup (PU) truck. ODI selected MY 1992—1997 GM Suburban vehicles as the subject vehicles for the following reasons: (1) the petitioner identified three Suburban vehicles with cracked Original Equipment Manufacturer (OEM) hitch receivers; (2) the ODI consumer complaint database contained a relatively high number of complaints on the subject vehicles; (3) the Suburban has one of the largest towing capacities among the peer vehicles and is commonly used to tow large travel trailers; and (4) ODI had conducted a previous investigation (PE95–036) on certain GM Sport Utility Vehicles (SUVs), including MY 1992–1995 Suburbans to investigate a similar OEM hitch receiver crack problem.

2.2 Vehicles Involved

GM produces the Suburban for both the Chevrolet and GMC Divisions. The combined number of subject vehicles produced in the United States was 738K vehicles.[1] The Chevrolet Division accounted for 512K

[1] Ward's Automotive Yearbook, 1992—1998 Editions for MY 1992—1997 Suburbans.

vehicles and the GMC Division accounted for 226K vehicles. According to GM, among the 738K vehicles, 494K vehicles were equipped with factory installed OEM hitch receivers.

3.0 Previous Recalls and Investigations of Hitch Receivers

ODI is aware of one recall and one previous investigation concerning hitch receiver cracking. DaimlerChrysler recalled certain MY 1998–2000 Dodge 2500 Ram pickup trucks (Recall 00V–107) because the steel had insufficient strength due to poor quality control. ODI opened a Preliminary Evaluation, PE95–036, in June of 1995 into an alleged defect in MY 1992–1993 Suburban vehicles after receiving four (4) complaints, one MY 1992 and three (3) MY 1993, concerning cracked hitch receivers. During this investigation, ODI expanded the scope to include other MY 1992–1995 GM SUVs. By the conclusion of the investigation in late 1995, ODI had received another complaint (MY 1992) and GM reported three (3) additional complaints (one MY 1992 and two MY 1993) bringing the complaints to a combined total of eight (8). The investigation revealed no injuries or crashes related to the alleged defect on the subject vehicles. ODI closed the investigation without any further actions and concluded the following:

* * * it appears that the cracks are readily obvious and slow to propagate. The problem may not be a catastrophic failure of the hitch platform. The high number of warranty claims coupled with the corresponding low number of failures is not indicative of a safety trend at this time.[2]

4.0 Hitch Receiver/Equipment and Towing Limits

Currently, there are no Federal Motor Vehicle Safety Standards (FMVSS) applicable to trailer towing hitch equipment. However, many hitch equipment manufacturers use the Society of Automotive Engineers Standard, SAE J684,[3] for hitch classification and test limits. According to SAE J684 (Table 1), there are four classes of towing capacities or tow ratings for applications less than 10,000 lb. When used with a weight distributing hitch system, the Suburban has a 10,000 lb. maximum towing capacity with the driver and one passenger onboard and no cargo in the tow vehicle. The additional weight of other occupants and cargo in the tow vehicle will reduce the towing capacity accordingly.

TABLE 1.—VARIOUS TYPES OF HITCH RECEIVERS

Class rating per SAE J684	Towing duty	Max. towing weight (in pounds)	Hitch system attachment type	Common payloads
Class I	Light	2,000	Weight Carrying (WC)	Monocycle & Jet Ski trailers.
Class II	Medium	3,500	WC	Small Boat & utility trailers.
Class III	Heavy	5,000	WC	Med. travel & utility trailers, Large boat trailers.
Class IV	Heavy	10,000	Weight Distributing	Large travel & utility trailers Automotive trailers.

4.1 Hitch Receiver

Figure 1 shows a diagram of a typical frame mounted Class III/IV type hitch receiver. There are three basic sections that make up a hitch receiver: (1) the hitch bar and ball assembly that connects the trailer to the tow vehicle, (2) the horizontal box transfer beam and (3) the vertical mounting flanges for attachment to the vehicle frame. Note that the diagram also shows the typical crack patterns found as reported by the petitioner.

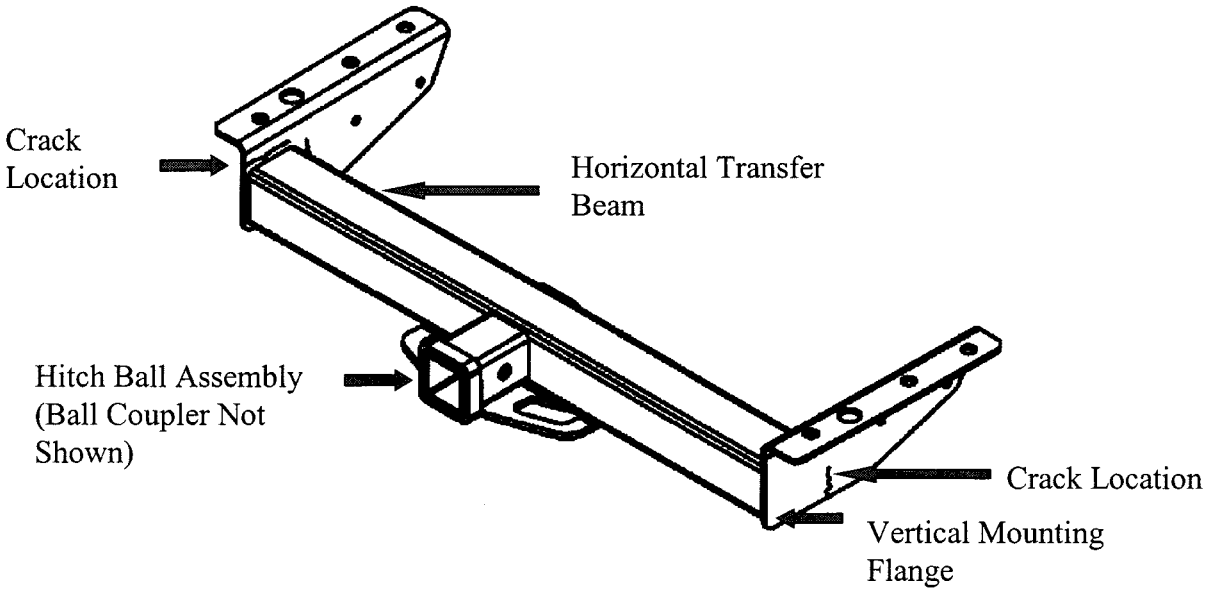

Figure 1. Typical Class III/IV towing Hitch Receiver

[2] NHTSA ODI PE95–036 (J. Abbott) of 31 October, 1995 (closing resume).

[3] "Trailering Couplings, Hitches, and Safety Chains—Automotive Type"—SAE J684 (6/98).

4.2 Weight Distribution (WD) Hitch System

Normally, on the lighter duty Class I/II/III applications, the trailer's tongue weight directly pushes down on the hitch receiver's coupling ball causing the rear of the tow vehicle to drop and the front of the vehicle to rise slightly. With larger and heavier trailers, this can severely affect vehicle handling and stopping distances and further add stresses to the tow vehicle and hitch receiver structures. To reduce these undesirable effects, an 'aftermarket' or 'third party' Weight Distribution (WD) hitch system must be used when towing large trailers. For Class IV applications with the WD system as shown in the set up of Figure 2, the two spring bars are bent upward to apply a counter moment torque to the WD hitch ball mount assembly and redirect or redistribute the point load tongue weight further forward in the tow vehicle. The subject vehicles' hitch receiver has a decal specifying 10,000 lb. towing and 1,000 lb. maximum tongue weight limits when used with the WD hitch system.

4.3 Proper Installation of the WD Hitch System

Based on the information obtained from various trailering sources,[4] a properly installed WD hitch system evenly distributes the loads to the entire tow vehicle. The WD hitch system's spring bars force both the front and rear wheel fenders equally downward. This aligns the tow vehicle so that it is approximately the same 'attitude' or 'level' as it was before the trailer was hooked up. A poorly installed WD hitch system can cause the tow vehicle's front end to 'lift up' resulting in more weight to the hitch receiver and rear axle. In addition, the ball mount height, spring bar angles, spring bar engagement level, and ball mount receiver bar length can also affect the proper installation and effectiveness of the WD hitch system.

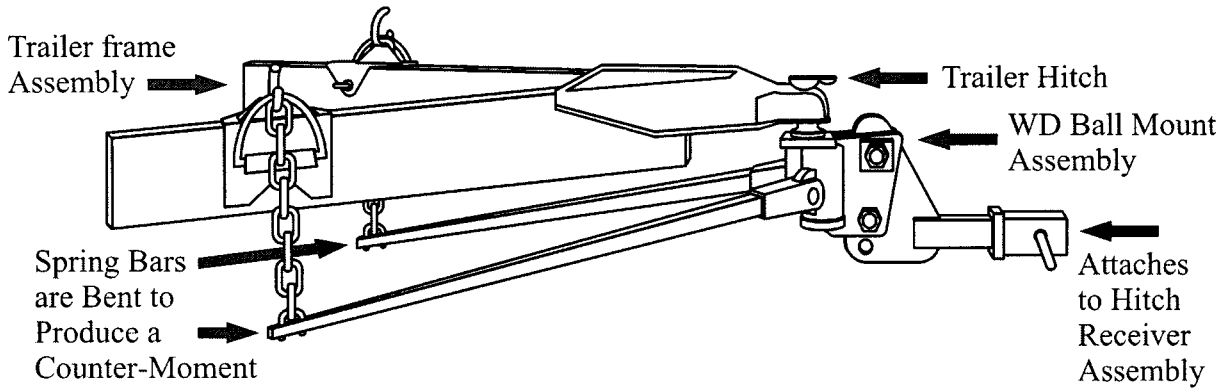

Figure 2. Typical Weight Distributing Hitch System Setup

4.4 Hitch Receiver Performance

For Class IV hitch receivers, SAE recommends a series of static test loads applied to the hitch ball mount and receiver to verify their towing limits. The static test loads include longitudinal, transverse, vertical and moment loads. According to SAE,[5] these static test loads are higher than the loads encountered during actual on-road towing. For example, the 2,100 lb. SAE specified vertical load is more than twice that of the typical trailer tongue weight limit of 1,000 lb. Tests conducted by SAE in the mid-1990s verified that the actual measured dynamic loads under normal towing conditions, such as turns, hills, dips and stops, are well within the higher SAE specified static loads. However, SAE also cautioned that abuse or mishaps such as backing into an object or one side of the trailer falling off the pavement can create loads that exceed the SAE specified loads. Remote and unimproved roadways and certain stretches of highways, with short concrete slabs causing the trailer to ''porpoise'' or oscillate up and down severely, can also create higher than normal loads at the hitch receiver.

5.0 Complaints

5.1 Complaints Submitted to ODI on the Subject Vehicles

ODI searched and analyzed all complaints involving the subject vehicles in its consumer database pertaining to an alleged cracked hitch receiver. As of August 1, 2000, the ODI database had recorded 15 cracked hitch receiver complaints on the subject vehicles. As shown in Table 2, the complaint dates, by calender year, were as follow: five in 1995, one in 1996, two in 1998, one in 1999 and six in 2000. There are high concentrations of complaints submitted in years 1995 and 2000. The first complaint concentration in 1995 was due to an effort of a Northeast region WBCCI Airstream travel club who surveyed its members and submitted all five of the complaints to ODI. The second complaint concentration in year 2000 was due to the efforts of the petitioner's Southeast region Airstream travel club safety committee in conjunction with ODI personnel during the February 2000 RV Rally in Sarasota, Florida. The inspections and field survey during the rally resulted in the submission of five of the six CY 2000 complaints in the ODI database. Otherwise, ODI has received only one or two complaints per year on the subject vehicles.

[4] Various Trailering Guides: Ford 2000 RV & Trailer Towing Guide (8/99); Reese 'Hitching-Up Procedure' distributed during Airstream RV rally in Sarasota, Florida (2/00); 1997 Airstream 34′ Excella Travel Trailer Owners Guide, Sections B and I on Hitching Up and Trailer Specifications; GM Suburban Owners Manuals, Section 4—'Towing a Trailer', MY 1993–1997; GM Suburban Sales Brochures, Section on Trailering, MY 1993–1997; and GMC Trailering Guides, MY 1993–1997.

[5] Discussions with SAE J684 Group Chairman, Mr. Jim Fait, during April and May of 2000.

TABLE 2.—ODI COMPLAINTS BY CALENDAR YEAR

Calendar year	CY95	CY96	CY97	CY98	CY99	CY00	Total
Suburban Total	5	1	0	2	1	6	15

Table 3 shows the complaint counts by model year for the subject vehicles equipped with the OEM installed hitch receivers. Among the fifteen Suburban complaints, eleven complainants were contacted during this petition analysis and they all reported towing 29′ and longer Airstream trailers having a listed Gross Vehicle Weight Rating (GVWR) ranging from 7,000 to 9,800 lb. Most of the complainants never weighed their trailer and do not know the actual gross trailer towing weight (trailer plus cargo in both the tow vehicle and trailer). One recent (CY 2000) complainant reported that prior to towing his current 31′ trailer, he was towing a 30′ long trailer when the trailer's wheels hit a large pothole on the road. The impact was severe enough to damage the trailer's frame and totally destroyed the trailer structure. After receiving the Airstream RV club's newsletter which asked members to inspect their hitch receivers, he found cracks in the hitch receiver. It is unclear whether the cracks were caused by the impact with the pothole or inappropriate loading, or initiated from incorrect installation and usage of the WD hitch system. ODI was unable to contact the other four complainants despite attempting to reach them at the addresses and telephone numbers they provided.

TABLE 3.—ODI COMPLAINTS AND COMPLAINT RATES ON THE SUBJECT VEHICLES AND PEER VEHICLES

Model year	MY92	MY93	MY94	MY95	MY96	MY97	Total	Pop. with hitch	Rate
Suburban Total	2	6	4	0	2	1	15	494K	3.0
Dodge PUs	1	0	0	3	0	0	4	495K	0.8

5.2 Complaints Submitted to ODI on Peer Vehicles

ODI has also searched for cracked hitch receiver complaints in its database on other MY 1992–1997 trucks and vans having similar towing capacities. Except for the Dodge D–150/250/350 and B–1500/2500/3500 series pickup trucks (see Table 3), ODI has received no more than one hitch receiver complaint on any other vehicle. The complaint rate for cracked hitch receivers on the Dodge truck with OEM hitch receivers is 0.8 per 100,000 vehicles [6] as compared with the subject vehicles' rate of 3.0 per 100,000 vehicles.

6.0 Inspection and Survey at the Recreational Vehicle (RV) Rally

6.1 Airstream RV Rally in Sarasota, Florida

ODI personnel, at the invitation of the petitioner and the Airstream Region 3 RV Safety Committee, attended a RV rally held in Sarasota, Florida during the period of February 15–21, 2000. Of the 600 RV participants towing a travel trailer at the RV rally, approximately 150 use the subject vehicle to tow a large 31′–34′ length Airstream travel trailer. Therefore, the percentage of large travel trailers among the 600 travel trailers at the Airstream RV rally was approximately 25%.

6.2 Physical Inspection of the Tow Vehicle Hitch Receivers

During the course of the RV rally, ODI and Airstream RV Safety Committee personnel made several announcements requesting each RV rally participant to inspect his/her hitch receiver for cracks. For those that responded, ODI and safety committee personnel visited them to further inspect their tow vehicles and trailers and to interview the owners. The Suburban was used as the tow vehicle in 21 of the 27 units inspected. Among these 21 units, 10 had cracked OEM hitch receivers, four had previously experienced cracked OEM hitch receivers and since had them replaced, and the remaining seven did not have any problems while using either the OEM or the non-OEM hitch receiver. The older MY 1993–1994 Suburbans accounted for six of the ten cracked receivers. Eight of the these 10 Suburban vehicles towed or previously towed the large 31′–34′ length Airstream travel trailer with GVWR near the 10,000 lb. limit.

Among the remaining six owners who didn't have the Suburban as their tow vehicle, there were two reports of cracked hitch receivers. Specifically, a MY 1995 and a MY 1996 Dodge pickup truck towing Airstream 30′ and 34′ travel trailers respectively.

6.3 Overloading in the RV Community

Present at this rally was the A'Weigh We Go (AWWG) weighing service. AWWG travels across North America to large rallies to provide an on-site weighing service and to give seminars on safe towing practices. RV manufacturers and tire companies partially sponsor AWWG to provide the weighing service at a nominal cost to the participants. AWWG [7] has weighed more than 10,000 vehicles and trailers in the past 10 years including motorhomes, tow vehicles, 5th wheel trailers, and travel trailers (TTs). The majority of the data collected were from motorhomes (5,462 units) and the least amount of data collected were from travel trailers (462 units). They found that overloading or improper matching of equipment and loading is a common problem in the RV communities. Among the 462 travel trailers they have weighed over this period, 54 percent of the tow vehicles and 51 percent of the TTs exceeded load limits in one or more of the loading limits such as the Gross Combination Weight Rating (GCWR), the Gross Vehicle Weight Rating (GVWR), Gross Axle Weight Rating (GAWR), Tire Load Rating (TLR) or net vertical hitch loading. AWWG noted the following concern in their handbook:

Of particular concern is that 57% (percent) were over GCWR, indicating that too many folks are trying to pull too much trailer with too little truck.

6.4 Weighing of Units at the Florida RV Rally

ODI contracted with AWWG to use their weighing services during the Florida RV rally. ODI then requested all of the Suburban owners with cracked hitch receivers and randomly selected a few of the owners without cracked hitch receivers to have their units weighed by the AWWG (at ODI's expense) at the conclusion of the RV rally. ODI instructed each owner to prepare the tow vehicle and trailer as they normally would for road travel. Prior to the day of departure, AWWG weighed each tow vehicle without the trailer attached. Then, on departure day, AWWG weighed the entire tow vehicle and trailer assembly at each wheel and axle. By measuring the loads at each wheel, AWWG can determine if the loads exceed any of the GCWR, GVWR, GAWR limits for both the tow vehicle and the trailer. AWWG also measured and calculated the total trailer towing weight and the net vertical loading on the tow vehicle. According to AWWG, the net vertical loading on the tow vehicle rear axis is roughly equal to the trailer tongue weight within an error of 50 lb.[8] By comparing the measured vehicle loads with the manufacturer's load limits, AWWG can

[6] Dodge light duty pickup truck population equipped with OEM hitch receivers suppled by DCX on 6/20/00.

[7] A'Weigh We Go Recreation Vehicle Weight & Tire Safety Handbook, Textbook Edition, Section I, Rev. 1/00.

[8] Discussons with AWWG president, Mr. J. Anderson, during March–April 2000. Data taken from AWWG's weighing of both tongue and vertical weighing of both tongue and vertical weights on travel trailers in early 1990's.

calculate the amount of 'weight margins' or 'weight overloading' in each of these areas.

During the RV rally, AWWG used calibrated commercial/industrial grade weighing scales that measure up to 20,000 lb. each with an accuracy to +/−50 lb.[9] Many law enforcement agencies use the same type of scale during their highway truck inspections. Throughout the weighing process, ODI personnel observed that AWWG was careful to keep the vehicle and/or trailer level during weighing in order to obtain the most accurate and consistent readings.

6.5 AWWG Data Review

AWWG weighed nine of the 10 Suburban vehicles with cracked OEM hitch receivers. One owner did not make his vehicle and trailer available for weighing. Eight of the nine weighed units showed overloading in at least one category. Note that these recorded load conditions represent only the load conditions while attending the week-long RV rally. Table 4 shows the various load conditions for each of the nine weighed units. The percentage of the rated load limit, shown as a ''+'' value, represents the margin within which the vehicle/trailer is below the maximum weight rating, and the percentage over the rated load limit, shown as a ''−'' value, represents overloading. Many owners exceeded weight limits in more than one rating. One owner (ID #1) exceeded six of the nine weight limits. Based on the weight data, overloading appeared to be a major contributing factor in cracked hitch receivers. The two vehicles listed at the bottom of the table (ID #8 & #9) that recorded the least amount of overloading and no overloading, respectively, had previously towed a larger and heavier 34′ travel trailer, and that may have been the cause of the cracked hitch receivers.

The remaining seven Suburban vehicles with cracked hitch receivers that were weighed had from one to six failed rating areas out of the possible nine areas. Additionally, six of these seven units exceeded either the 10,000 lb. trailer towing or 1,000 lb. tongue weight limits as specified on the OEM hitch receiver.

6.6 Weights of Large Travel Trailers

Many modern RV trailers have comforts and amenities that help make mobile traveling more like a home on wheels. Full size bedroom, kitchen, bath, recliner and sofa are standard on many 28′ or larger trailers. Many RV manufacturers can equip these trailers with additional options such as ceramic tile floors, stone counter tops, microwave oven, entertainment center, satellite/computer systems and room slide-outs. All these items add additional weight to the basic trailer. The more the trailer weight is above the empty Dry Weight condition, the less 'cargo' capacity is available to the consumer before reaching the trailer GVWR and the hitch receiver's towing limit. For example, Airstream rates their MY 2000 34′ length Limited travel trailers at 8,290 lb. Dry Weight and a GVWR of 9,800 lb. maximum[10] resulting in a Net Carrying Capacity (NCC) of only 1,510 lb. This NCC would include any additional dealer or owner-installed options, fluids, LP gas, personal items such as food, clothing, television, furniture, kitchen wares, books, and repair tools. In addition, relocating some loads from the trailer to the tow vehicle may help keep from exceeding the trailer's GVWR, but still diminishes the towing capacity of the hitch receiver from the 10,000 lb. maximum rating. Note that in a ''remote'' camping environment where there are no utilities, the camper may have the 54-gallon fresh water tank and the twin 20-gallon LP tanks filled to full capacities. These two items alone account for a combined weight of more than 600 lb. of the available NCC. In the Airstream web site,[11] the following disclaimer appears at the bottom of every page:

Vehicle Loading: Every effort has been made to provide the greatest number of options for the recreation vehicle owner. Along with these choices comes the responsibility to manage the loads that are imposed by the choices so that they remain within the manufacturer's specified chassis weight limits. Do not overload the recreation vehicle.

Dry weights based on standard features; optional equipment not included. Net carrying capacity (NCC) determined by subtracting unloaded vehicle weight (UVW) from gross vehicle weight (GVWR) and includes fluids, options and cargo. Liquid capacities and weights are approximations only.

Besides a safety seminar given by the RV club's safety committee at the Florida rally, AWWG also presented a safety seminar there. During the seminar, AWWG reported that ''the average couple carries about 2,000 lb. of stuff and the average full-timer, about 3,000 lb.'' which was documented in its handbook.[12] Many of the participants at the RV rally were retired ''full-timers,'' including all of the Suburban owners with cracked hitch receivers.

Although not included in Table 4, because the owners did not report any hitch receiver problems, seven other Suburban vehicles towing large trailers with OEM and non-OEM hitch receivers, including the one belonging to the petitioner, were also weighed by AWWG. The results showed that overloading is also common among these owners, but to a lesser extent.

While the WBCCI RV safety committee provides guidance to RV owners in the proper usage of towing a trailer and the need to regularly inspect the towing equipment, there are no Federal or state laws that require weighing of RV trailers while traveling the nation's interstates as there are for commercial trucks.

7.0 GM Data Review

At the request of ODI, GM supplied the following information[13] concerning the alleged defect. GM stated that the same hitch receiver design has been used during the entire production period of the subject vehicles (MY 1992–1997).

7.1 GM Owner Reports

Among the 494K MY 1992–1997 Suburban vehicles sold with OEM hitch receivers, GM has received 15 owner complaints, one accident claim, and has been named in two lawsuits related to the alleged defect in the subject vehicles. Excluding non-crack-related problems, duplicates of RV rally field survey reports and ODI complaints, Table 5 lists the nine cracked hitch receiver complaints from GM. The first reported litigation case involved a MY 1993 Suburban towing a 34 Airstream RV travel trailer. Prior to the case going to trial, the owner filed a 'notice of nonsuit' and the court dismissed the case in 1/99. ODI reviewed this same report in 1995 during its investigation (PE95–036). The other litigation report involved a MY 1995 Suburban that lost its trailer while hauling a load of pumpkins. The owner replaced the hitch receiver before a GM representative was able to verify the failure or determine the cause. The report claimed approximately $1800 in damages. The one accident claim was from the same owner as the first litigation report. GM also reported 154 warranty claims on the subject vehicles' hitch receiver. Based on the GM failure codes, ODI estimates that approximately 15 to 20 percent of the claims may involve cracks in the vertical mounting flange, but further detail is not available. None of the complaints or warranty reports indicate bodily injuries or vehicle crashes as a result of the cracked hitch receivers.

TABLE 4.—WEIGHT DATA/ANALYSIS ON THE NINE SUBURBAN HITCH RECEIVER CRACK FAILURES

ID	Tow vehicle	Trailer	Tow vehicle overload? (percent)				Trailer overload? (percent)			Hitch receiver overload? (percent)		
			Tow veh. GCWR	Tow veh. GVWR	Tow veh. GAWR	Tire load limit	Trailer GVWR	Trailer GAWR	Tire load limit	Trailer two Wt. 10,000 lb.	Vert. Wt. 1,000 lb.	Remarks
1	1994 Sub	34′ A/S	−4	99	92	−1	−16	−12	68	−23	−12	6 failed areas
2	1996 Sub	34′ A/S	99	−3	−12	94	−5	98	82	−15	−18	5 failed areas
3	1999 Sub	34′ A/S	−1	92	77	78	−3	−13	84	−17	1	4 failed areas

[9] AWWG Weighing Devices—Model WL 101, Range 0–20,000 lb., Class III Accuracy, Load-O-Meter Corporation, Baltimore, MD.

[10] Thor Industries, Inc. Airstream, An American Legend 2000 Sales Brochure.

[11] Thor Industries, Inc. Airstream Travel Internet web site at *http://www.airstream-rv.com* 5/00.

[12] A Weigh We Go Recreation Vehicle Weight & Tire Safety Handbook, Textbook Edition, Section VI, Rev. 1/00.

[13] General Motor response to ODI Information Request (IR), GM 583 of 3/00 and FAX of 5/00.

TABLE 4.—WEIGHT DATA/ANALYSIS ON THE NINE SUBURBAN HITCH RECEIVER CRACK FAILURES—Continued

ID	Tow vehicle	Trailer	Tow vehicle overload? (percent)				Trailer overload? (percent)			Hitch receiver overload? (percent)		
			Tow veh. GCWR	Tow veh. GVWR	Tow veh. GAWR	Tire load limit	Trailer GVWR	Trailer GAWR	Tire load limit	Trailer two Wt. 10,000 lb.	Vert. Wt. 1,000 lb.	Remarks
4	1993 Sub	31′ A/S	80	96	93	90	−7	0	88	82	−8	3 failed areas
5	1993 Sub	34′ A/S	92	−5	−10	90	99	98	63	−3	84	3 failed areas
6	1993 Sub	34′ A/S	91	86	−4	90	91	97	79	−1	88	2 failed areas
7	1995 Sub	30′ A/S	85	96	−1	85	95	93	99	91	65	1 failed area
8	1994 Sub	31′ A/S	86	80	80	67	−1	100	95	92	63	1 failed area
9	1996 Sub	30′ A/S	86	87	79	97	96	91	84	91	100	0 failed area

Notes:
GCWR—The Gross Combination Weight Rating (GCWR) is the maximum allowable combined weights from the tow vehicle and the trailer as specified by the vehicle manufacturer.
GVWR—The Gross Vehicle Weight Rating (GVWR) is the maximum allowable gross vehicle weight of the tow vehicle or trailer as specified by the manufacturer.
GAWR—The Gross Axle Weight Rating (GAWR) is the maximum allowable weight on each axle as specified by the manufacturer.
Tire Load Limit—The tire load limit is the maximum allowable load on each tire as specified by the manufacturer.
Trailer Tow Wt.—The trailer towing weight is the maximum allowable towing weight by the hitch receiver. It includes the trailer weight, as well as any additional occupant and cargo weights in the tow vehicle.
Vert. Wt.—The hitch vertical weight is the maximum net vertical loads on the rear axis after trailer hookup. According to AWWG, the vertical weight is approximately the same as the hitch tongue weight.

TABLE 5.—GM COMPLAINTS AND REPORTS ON HITCH RECEIVER CRACKING

ID	DOI	Tow vehicle	Trailer mileage	Trailer weight	Nature of failure	Est. damage cost	GM/dealer action
99–6701	6/99	’96 Sub	6K vehicle miles	32’ Jayco Est. 9K ι	1’’ crack both sides	Not Available (n/a).	100% Goodwill (G/W).
99–7801	8/99	’94 Sub	100K vehicle miles	Car Trailer Est. 6,5K ι.	Side plate broke off	$0.9K on trailer.	Denied.
99–6101	9/99	’94 Sub	Est. 120K tow miles	27 Jayco RV Est. 8K ι.	Broken & cracked	N/A	Denied.
99–7001	11/99	’95 Sub	45K vehicle miles	A/S trailer N/A	Broken & cracked	N/A	Under warranty.
99–0994	8/99	’96 Sub	43K vehicle miles	RV trailer N/A	Broken-trailer separation.	N/A	75% G/W.
99–4148	12/99	’94 Sub	57K vehicle miles	A/S trailer N/A	Cracked on both sides.	N/A	Denied.
99–1001	3/00	’93 Sub	Est. 60K tow miles	A/S 32’ trailer 6.5K+	Broken & cracked on both sides.	N/A	Denied.
99–6101	10/94	’93 Sub	160K vehicle miles	A/S trailer N/A	Broken & crack	N/A	Denied.

7.2 GM Hitch Receiver Design, Test and Performance Limits

During the development phase, GM conducted both nondestructive analysis and destructive testing on their hitch receiver design. This included Finite Element Analysis (FEA), static load testing and on-road durability tests. GM’s FEA, as well as the static load testing, support GM’s opinion that the hitch receiver will perform as designed. Both GM and other hitch receiver manufacturers use the same static load limits found in the SAE standard. In addition, GM successfully conducted a 6,500 mile on-road durability test with a Suburban towing a 10,000 lb. trailer having 1,000 lb. tongue weight over various road conditions without cracks or hitch receiver failure. According to GM, due to the course’s hilly terrain, this test is equivalent to 20,000 normal towing miles. It should be noted that GM does not identify the ‘‘towing rating with no cargo’’ limitation anywhere on the hitch receiver, on the vehicle, or in any of the pre-1996 owners’ manuals. However, this limitation is specified in their trailering guides.

7.3 GM’s Assessment of the Crack Hitch Receiver Problems

GM concluded that based on its data:

All test and analysis documents within GM’s possession indicate that the subject component will perform without failure in the field if load limitations are met. GM believes that loaded trailer weights in the field may exceed 10,000 lb. and that loaded trailer tongue weights in the field may exceed 1000 lb. It is GM’s belief that if the hitch platform is used within the confines as described by GM in various, readily available trailering usage documents, the subject component will perform without failure.

8.0 Conclusions

1. There are no Federal Motor Vehicle Safety Standards (FMVSS) or ‘‘National Highway Safety Standards for materials and construction specifications,’’ as indicated in the petition, relating to trailer hitch design. The SAE J684 trailering standard covers classification and testing of towing equipment. For Class IV hitch receivers, according to SAE J684, the static test loads take into account the dynamic loads experienced during normal towing operations.

2. An analysis of hitch receiver crack/failure complaints in the ODI consumer complaint database and those submitted by GM reveals a low number and rate of complaints and a lack of a complaint trend for the subject vehicles, as well as their peer vehicles.

3. A recent field survey and weighing of the tow vehicles and trailers conducted by ODI indicate that a combination of overloading, improper hitch setup, and adverse road conditions appears to be a major factor in hitch receiver failures. Eight of nine surveyed Suburban owners at the Florida RV rally had overloaded their vehicle/trailer in one or more areas that can affect the structural integrity of the hitch receiver platform.

4. GM information indicates that the hitch receiver design passes the same static loading levels as specified in SAE J684 and also passes their on-road durability test while towing of a 10,000 lb. trailer with 1,000 lb. tongue load. GM believes that overloading is the cause of the reported failures in the field.

5. ODI initiated an investigation on the same hitch receiver cracking problem in 1995, but closed it in October the same year because the total complaint rates were low and ODI could not identify a defect trend. Since then, ODI has found no new significant information on MY 1992–1997 Suburban vehicles to support reopening this investigation.

6. RV owners should be educated as to the seriousness of overloading their RVs and tow vehicles. This could be accomplished by initiating an extensive campaign by vehicle, RV manufacturers, RV club safety committees, and national RV associations to further define loading limits and industry-wide terminologies, to advise owners to avoid conditions leading to overloading of both the towing vehicle and trailer, to inspect their towing equipment periodically, and to install weight distributing hitch systems correctly.

7. Based on the information presented above, it is unlikely that NHTSA would issue an order for the notification and remedy of a safety-related defect in the subject vehicles at the conclusion of the investigation

requested in the petition. Therefore, in view of the need to allocate and prioritize NHTSA's limited resources to best accomplish the agency's safety mission, the petition is denied.

[FR Doc. 00–24584 Filed 9–22–00; 8:45 am]

BILLING CODE 4910–59–P

DEPARTMENT OF TRANSPORTATION

National Highway Traffic Safety Administration

[Docket No. NHTSA–2000–7164; Notice 2]

Suzuki Motor Corporation; Denial of Application for Decision of Inconsequential Noncompliance

Suzuki Motor Corporation of Hamamatsu, Japan, has determined that it manufactured 1,595 vehicles that fail to comply with Federal Motor Vehicle Safety Standard (FMVSS) No. 225, ''Child Restraint Anchorage Systems,'' and has filed an appropriate report pursuant to 49 CFR part 573, ''Defect and Noncompliance Reports.'' Suzuki has also applied to be exempted from the notification and remedy requirements of 49 U.S.C. Chapter 301—''Motor Vehicle Safety'' on the basis that the noncompliance is inconsequential to motor vehicle safety.

Notice of receipt of the application was published on April 25, 2000 in the **Federal Register** (65 FR 24253), with a 30-day comment period. We received no comments.

FMVSS No. 225, S4.1, requires that:

Each tether anchorage and each child restraint anchorage system installed, either voluntarily or pursuant to this standard, in any new vehicle manufactured on or after September 1, 1999, shall comply with the configuration, location, marking and strength requirements of this standard. The vehicle shall be delivered with written information, in English, on how to appropriately use those anchorages and systems.

FMVSS No. 225, S12, requires that:

The vehicle must provide written instructions, in English, for using the tether anchorages and the child restraint anchorage system in the vehicle. If the vehicle has an owner's manual, the instructions must be in that manual. The instructions shall:

(a) Indicate which seating positions in the vehicle are equipped with tether anchorages and child restraint anchorage systems;

(b) In the case of vehicles required to be marked as specified in paragraphs S4.1, S9.5(a), or S15.4, explain the meaning of markings provided to locate the lower anchorages of child restraint anchorage systems; and

(c) Include instructions that provide a step-by-step procedure, including diagrams, for properly attaching a child restraint system's tether strap to the tether anchorages.

At the start of production for the 2000 model year, Suzuki began installing user-ready tether anchorages as standard equipment in Suzuki Swift vehicles. Due to an oversight, however, Suzuki neglected to update the Suzuki Swift owner's manual in conjunction with this production change. As a result, the owner's manuals for 1,595 Suzuki Swift vehicles manufactured between August 1999 and February 2000, and shipped prior to March 2000, do not comply with the information requirements in FMVSS No. 225.

Suzuki supports its application for inconsequential noncompliance with the following:

''The vehicle owner's manual for the subject Suzuki Swift vehicles contains the following text relating to the use of child restraint systems that require use of a top tether:

Some child restraint systems require the use of a top strap. If you use such a restraint system and your vehicle is not equipped with the top tether strap anchor bracket, have your dealer install the top strap anchor bracket, or contact your dealer for instructions on how to install the anchor bracket.

In addition to the text message, the owner's manual contains two illustrations (one for the hatchback model and one for the sedan model) showing a child restraint system positioned at one of the rear seating positions, with its tether strap attached to the tether anchorage.

Although the Swift owner's manual does not mention that user-ready tether anchorages are provided as standard equipment and does not show all of the seating positions that are equipped with a tether anchorage, the illustrations in the manual do show the tether anchorage location for one of the rear seating positions. Suzuki believes that vehicle owners will assume, based on the illustrations, that anchorages are provided for both rear seating positions. In addition, when you look at the actual vehicle, it is obvious that user-ready anchorages are provided as standard equipment for both rear seating positions. Since the tether anchorages are easily recognizable in the vehicle, Suzuki believes that failure to fully illustrate the location of each tether anchorage in the vehicle owner's manual is inconsequential.

The Swift owner's manual also does not fully comply with the requirement to ''* * * provide a step-by-step procedure, including diagrams, for properly attaching a child restraint system to the tether anchorages* * *.'' Typically, because there are differences in child restraint system design, the vehicle owner's manual can only provide general instructions to hook the tether strap hook into the anchor bracket and tighten the tether strap. These steps are somewhat obvious, and should be intuitively understood by vehicle owners.

Also, each child restraint system is required to be accompanied with its own installation instructions. S5.6.1 of FMVSS No. 213, Child Restraint Systems, requires that each child restraint system ''* * * must be accompanied by printed installation instructions in the English language that provide a step-by-step procedure, including diagrams, for installing the system in motor vehicles * * *.''. Suzuki believes that vehicle owners rely on the installation instructions provided with the child restraint system, rather than those provided in the vehicle owner's manual, for information about how to install the child restraint system in their vehicle. As a result, Suzuki believes that failure to provide a step-by-step procedure, in the vehicle owner's manual, for attaching a child restraint system to the vehicle's tether anchorages is inconsequential to safety.''

We are denying Suzuki's application for the following reasons:

Suzuki failed to adhere to S4.1 of FMVSS No. 225, which requires that manufacturers shall specify tether anchorage configurations and locations in their vehicles along with written information on how to use those anchorages and systems appropriately. Suzuki also failed to meet the requirements of S12(a) and (c) of FMVSS No. 225, which specify that the information provided in the vehicle owner's manual must (a) indicate which seating positions in the vehicle are equipped with tether anchorages and (b) include instructions that provide step-by-step procedures, and diagrams for properly attaching a child restraint system's tether strap to the tether anchorages. Suzuki provides no excuse for its oversight in neglecting to update the 2000 model year Suzuki Swift owner's manual with the required information.

The agency does not agree with Suzuki that illustrating one child restraint system positioned at only one of the two rear seating positions, with its tether strap attached to the tether anchorage sufficiently demonstrates to the owner that in fact two rear seating positions are available for child restraints with tether installations. The agency further disagrees with Suzuki's assumption that the steps necessary for hooking the tether strap to the anchor bracket in the vehicle will be ''intuitively'' understood by vehicle owners. Child restraint systems with a top tether strap have only recently been introduced for use in this country, and requirements for tether anchorages have only applied to vehicles manufactured after September 1, 1999. Therefore, it is not likely that vehicle owners will be familiar with this new child restraint system feature on the child seat itself or its proper connection to the vehicle. The use of a top tether decreases the motion of a child restraint in a forward crash and therefore reduces the likelihood that the occupant child's head will impact hard interior surfaces of the