AUTHENTICATED
U.S. GOVERNMENT
INFORMATION
GPO

Federal Register

8–28–00 Monday
Vol. 65 No. 167 Aug. 28, 2000
Pages 51997–52286

The **FEDERAL REGISTER** is published daily, Monday through Friday, except official holidays, by the Office of the Federal Register, National Archives and Records Administration, Washington, DC 20408, under the Federal Register Act (44 U.S.C. Ch. 15) and the regulations of the Administrative Committee of the Federal Register (1 CFR Ch. I). The Superintendent of Documents, U.S. Government Printing Office, Washington, DC 20402 is the exclusive distributor of the official edition.

The **Federal Register** provides a uniform system for making available to the public regulations and legal notices issued by Federal agencies. These include Presidential proclamations and Executive Orders, Federal agency documents having general applicability and legal effect, documents required to be published by act of Congress, and other Federal agency documents of public interest.

Documents are on file for public inspection in the Office of the Federal Register the day before they are published, unless the issuing agency requests earlier filing. For a list of documents currently on file for public inspection, see http://www.nara.gov/fedreg.

The seal of the National Archives and Records Administration authenticates the Federal Register as the official serial publication established under the Federal Register Act. Under 44 U.S.C. 1507, the contents of the **Federal Register** shall be judicially noticed.

The **Federal Register** is published in paper and on 24x microfiche. It is also available online at no charge as one of the databases on GPO Access, a service of the U.S. Government Printing Office.

The online edition of the **Federal Register** is issued under the authority of the Administrative Committee of the Federal Register as the official legal equivalent of the paper and microfiche editions (44 U.S.C. 4101 and 1 CFR 5.10). It is updated by 6 a.m. each day the **Federal Register** is published and it includes both text and graphics from Volume 59, Number 1 (January 2, 1994) forward.

GPO Access users can choose to retrieve online **Federal Register** documents as TEXT (ASCII text, graphics omitted), PDF (Adobe Portable Document Format, including full text and all graphics), or SUMMARY (abbreviated text) files. Users should carefully check retrieved material to ensure that documents were properly downloaded.

On the World Wide Web, connect to the **Federal Register** at http://www.access.gpo.gov/nara. Those without World Wide Web access can also connect with a local WAIS client, by Telnet to swais.access.gpo.gov, or by dialing (202) 512-1661 with a computer and modem. When using Telnet or modem, type swais, then log in as guest with no password.

For more information about GPO Access, contact the GPO Access User Support Team by E-mail at gpoaccess@gpo.gov; by fax at (202) 512–1262; or call (202) 512–1530 or 1–888–293–6498 (toll free) between 7 a.m. and 5 p.m. Eastern time, Monday–Friday, except Federal holidays.

The annual subscription price for the **Federal Register** paper edition is $638, or $697 for a combined **Federal Register,** Federal Register Index and List of CFR Sections Affected (LSA) subscription; the microfiche edition of the **Federal Register** including the Federal Register Index and LSA is $253. Six month subscriptions are available for one-half the annual rate. The charge for individual copies in paper form is $9.00 for each issue, or $9.00 for each group of pages as actually bound; or $2.00 for each issue in microfiche form. All prices include regular domestic postage and handling. International customers please add 25% for foreign handling. Remit check or money order, made payable to the Superintendent of Documents, or charge to your GPO Deposit Account, VISA, MasterCard or Discover. Mail to: New Orders, Superintendent of Documents, P.O. Box 371954, Pittsburgh, PA 15250–7954.

There are no restrictions on the republication of material appearing in the **Federal Register.**

How To Cite This Publication: Use the volume number and the page number. Example: 65 FR 12345.

SUBSCRIPTIONS AND COPIES

PUBLIC	
Subscriptions:	
Paper or fiche	**202–512–1800**
Assistance with public subscriptions	**512–1806**
General online information	**202–512–1530; 1–888–293–6498**
Single copies/back copies:	
Paper or fiche	**512–1800**
Assistance with public single copies	**512–1803**
FEDERAL AGENCIES	
Subscriptions:	
Paper or fiche	**523–5243**
Assistance with Federal agency subscriptions	**523–5243**

FEDERAL REGISTER WORKSHOP

THE FEDERAL REGISTER: WHAT IT IS AND HOW TO USE IT

FOR: Any person who uses the Federal Register and Code of Federal Regulations.

WHO: Sponsored by the Office of the Federal Register.

WHAT: Free public briefings (approximately 3 hours) to present:

1. The regulatory process, with a focus on the Federal Register system and the public's role in the development of regulations.
2. The relationship between the Federal Register and Code of Federal Regulations.
3. The important elements of typical Federal Register documents.
4. An introduction to the finding aids of the FR/CFR system.

WHY: To provide the public with access to information necessary to research Federal agency regulations which directly affect them. There will be no discussion of specific agency regulations.

WASHINGTON, DC

WHEN: September 13, 2000, at 9:00 a.m.

WHERE: Office of the Federal Register
Conference Room
800 North Capitol Street, NW.
Washington, DC
(3 blocks north of Union Station Metro)

RESERVATIONS: 202–523–4538

Printed on recycled paper.

Contents

Federal Register

Vol. 65, No. 167

Monday, August 28, 2000

Agricultural Marketing Service
NOTICES
Meetings:
Burley Tobacco Advisory Committee, 52063

Agriculture Department
See Agricultural Marketing Service
See Animal and Plant Health Inspection Service
See Cooperative State Research, Education, and Extension Service

Air Force Department
NOTICES
Agency information collection activities:
Proposed collection; comment request, 52100

Alcohol, Tobacco and Firearms Bureau
RULES
Organization, functions, and authority delegations:
Appropriate ATF officers, 52018–52021
PROPOSED RULES
Alcohol, tobacco, and other excise taxes:
Commerce in firearms and ammunition—
Firearms; annual inventory, 52054–52056
NOTICES
Organization, functions, and authority delegations:
Subordinate ATF officers, 52159–52161

Animal and Plant Health Inspection Service
RULES
Exportation and importation of animals and animal products:
African swine fever; disease status change—
Portugal, 51997
User fees:
Veterinary services—
Import- and export-related services, 51997–52010

Arts and Humanities, National Foundation
See National Foundation on the Arts and the Humanities

Coast Guard
RULES
Drawbridge operations:
Louisiana, 52021–52023
Uninspected vessels:
Towing vessels; fire protection measures, 52043–52047
PROPOSED RULES
Drawbridge operations:
Louisiana, 52057–52058

Commerce Department
See Export Administration Bureau
See International Trade Administration
See Minority Business Development Agency
See National Institute of Standards and Technology
See National Oceanic and Atmospheric Administration
NOTICES
Agency information collection activities:
Submission for OMB review; comment request, 52063–52064

Commodity Futures Trading Commission
PROPOSED RULES
Commodity Exchange Act:
Futures commission merchants and introducing brokers; minimum financial requirements
Capital charge on unsecured receivables due from foreign brokers, 52051–52054

Cooperative State Research, Education, and Extension Service
NOTICES
Meetings:
Forestry Research Advisory Council, 52281–52282

Defense Department
See Air Force Department
See Navy Department
PROPOSED RULES
Federal Acquisition Regulation (FAR):
Commercial items; nongovernmental purposes, 52283–52286
Prompt payment and overpayment recovery, 52243–52257

Education Department
NOTICES
Meetings:
Web-Based Education Commission, 52101–52102

Energy Department
See Federal Energy Regulatory Commission
NOTICES
Meetings:
Environmental Management Site-Specific Advisory Board—
Idaho National Engineering and Environmental Laboratory, ID, 52102
High Energy Physics Advisory Panel, 52102–52103

Environmental Protection Agency
RULES
Air quality implementation plans; approval and promulgation; various States:
Georgia, 52028–52040
Superfund program:
National oil and hazardous substances contingency plan—
National priorities list update, 52040–52042
PROPOSED RULES
Air pollutants, hazardous; national emission standards:
Cellulose products manufacturing, 52165–52210
Air pollution; standards of performance for new stationary sources:
Commercial and industrial solid waste incineration units, 52058–52061
Radiation protection programs:
Rocky Flats Environmental Technology Site—
Transuranic radioactive waste proposed for disposal at Waste Isolation Pilot Plant; waste characterization program documents availability, 52061–52062

Superfund program:
National oil and hazardous substances contingency plan—
National priorities list update, 52062
NOTICES
Agency information collection activities:
Submission for OMB review; comment request, 52107
Grants and cooperative agreements; availability, etc.:
National Performance Track Program, 52107–52111
U.S.-Mexico Border in Lower Rio Grande Valley Region; Border XXI Environmental Education Plan, 52111–52114
Pesticide programs:
Risk assessments and public participation process (non-organophosphates)—
Diclofop methyl, 52114–52116
Water pollution control:
Clean Water Act—
Class I administrative penalty assessments, 52116

Executive Office of the President
See Management and Budget Office
See National Drug Control Policy Office

Export Administration Bureau
NOTICES
Meetings:
Regulations and Procedures Technical Advisory Committee, 52064–52065

Federal Aviation Administration
RULES
Airworthiness directives:
Eurocopter Deutschland GMBH, 52010–52012
Eurocopter France, 52012–52015
Class E airspace, 52015–52016
PROPOSED RULES
Airworthiness directives:
Boeing, 52049–52051

Federal Communications Commission
RULES
Common carrier services:
Truth-in-billing and billing format—
Principles and guidelines; effective date, 52048

Federal Emergency Management Agency
RULES
Disaster assistance:
Cerro Grande fire assistance, 52259–52279
NOTICES
Privacy Act:
Systems of records, 52116–52118

Federal Energy Regulatory Commission
NOTICES
Electric rate and corporate regulation filings:
American Electric Power Service Corp. et al., 52105–52107
Applications, hearings, determinations, etc.:
Alliance Pipeline, L.P., et al., 52103
Mississippi Canyon Gas Pipeline, LLC, 52103–52104
New York Independent System Operator, Inc., 52104
Southern California Edison Co. et al., 52104
Tennessee Gas Pipeline Co., 52104–52105

Federal Highway Administration
NOTICES
Environmental statements; notice of intent:
Nobles County, MN, 52156–52157

Federal Reserve System
NOTICES
Banks and bank holding companies:
Change in bank control, 52118
Formations, acquisitions, and mergers, 52118–52119

Fish and Wildlife Service
NOTICES
Comprehensive conservation plans; availability, etc.:
Cedar Island National Wildlife Refuge et al., NC, 52120–52121
Pierce National Wildlife Refuge et al., WA, 52121–52123

Food and Drug Administration
RULES
Biological products:
Albumin (human), plasma protein fraction (human), and immune globulin (human), 52016–52018

General Services Administration
PROPOSED RULES
Federal Acquisition Regulation (FAR):
Commercial items; nongovernmental purposes, 52283–52286
Prompt payment and overpayment recovery, 52243–52257
NOTICES
Agency information collection activities:
Submission for OMB review; comment request, 52119
Privacy Act:
Systems of records, 52119–52120

Health and Human Services Department
See Food and Drug Administration
See Health Care Financing Administration
NOTICES
Agency information collection activities:
Proposed collection; comment request, 52120

Health Care Financing Administration
RULES
Medicaid:
State Children's Health Insurance Program; allotments and payments to States
Correction, 52042–52043

Indian Affairs Bureau
NOTICES
Agency information collection activities:
Proposed collection; comment request, 52123–52124
Submission for OMB review; comment request, 52124–52125

Interior Department
See Fish and Wildlife Service
See Indian Affairs Bureau
See Land Management Bureau
See National Park Service
See Reclamation Bureau
NOTICES
National Environmental Policy Act; implementation, 52211–52241

Internal Revenue Service
RULES
Income taxes:
Annuities valuation, interests for life or terms of years, and remainder or reversionary interests; actuarial tables use
Correction, 52163

International Trade Administration
NOTICES
Antidumping:
Fresh Atlantic salmon from—
Chile, 52065–52066
Tin mill products from—
Japan, 52067–52068
Export trade certificates of review, 52068–52069

Labor Department
See Mine Safety and Health Administration

Land Management Bureau
NOTICES
Environmental statements; availability:
Kingman Resource Area, AZ, 52125–52126
Meetings:
Resource Advisory Councils—
Northwest California, 52126
Motor vehicle use restrictions:
California, 52126–52127
Montana, 52127–52128
Opening of public lands:
Wyoming, 52128–52129
Resource management plans, etc.:
Powder River Resource Area et al., MT, 52129
Withdrawal and reservation of lands:
South Dakota; cancellation, 52129–52130

Management and Budget Office
NOTICES
Budget rescissions and deferrals
Cumulative reports, 52143–52145

Maritime Administration
NOTICES
Coastwise trade laws; administrative waivers:
SMT CHEMICAL TRADER, 52157–52158

Mine Safety and Health Administration
NOTICES
Petitions for safety standard modifications; summary of affirmative decisions, 52131–52135

Minority Business Development Agency
NOTICES
Grants and cooperative agreements; availability, etc.:
Minority Business Development Center Program, 52069–52084
Native American Business Development Center Program, 52084–52096

National Aeronautics and Space Administration
PROPOSED RULES
Federal Acquisition Regulation (FAR):
Commercial items; nongovernmental purposes, 52283–52286
Prompt payment and overpayment recovery, 52243–52257

National Credit Union Administration
NOTICES
Agency information collection activities:
Proposed collection; comment request, 52135–52136

National Drug Control Policy Office
NOTICES
Meetings:
Drug Free Communities Advisory Commission, 52116

National Foundation on the Arts and the Humanities
NOTICES
Meetings:
National Museum Services Board, 52136

National Highway Traffic Safety Administration
NOTICES
Motor vehicle safety standards:
Nonconforming vehicles—
Importation eligibility; determinations, 52158–52159

National Institute of Standards and Technology
NOTICES
Meetings:
Computer System Security and Privacy Advisory Board, 52096

National Oceanic and Atmospheric Administration
NOTICES
Grants and cooperative agreements; availability, etc.:
Ocean Remote Sensing Program, 52096–52100

National Park Service
NOTICES
Environmental statements; availability, etc.:
Glacier National Park, MT; Lake McDonald/Park Headquarters Wastewater Treatment System Rehabilitation, 52130

Navy Department
NOTICES
Environmental statements; availability, etc.:
Naval Ammunition Support Detachment Property, Vieques Island, Puerto Rico; transfer, 52100–52101

Nuclear Regulatory Commission
PROPOSED RULES
Source material; domestic licensing:
Uranium and thorium; rulemaking and jurisdictional working groups, 52049
NOTICES
Environmental statements; availability, etc.:
Gulf Coast International Inspection, Inc., 52139–52140
Southern Nuclear Operating Co., Inc., 52140–52141
Environmental statements; notice of intent:
Veterans Administration Medical Center, Brooklyn, NY, 52141–52143
Applications, hearings, determinations, etc.:
Connecticut Light & Power Co. et al., 52136–52138
Consolidated Edison Co. of New York, Inc., 52138–52139

Office of Management and Budget
See Management and Budget Office

Postal Service
RULES
International Mail Manual:
Priority Mail Global Guaranteed; enhanced expedited service from selected U.S.locations to selected European countries and China; amendment, 52023–52028

Public Health Service
See Food and Drug Administration

Reclamation Bureau
NOTICES
Environmental statements; availability, etc.:
Contra Costa Water District, Central Valley Project, CA, 52130

Securities and Exchange Commission
NOTICES
Investment Company Act of 1940:
Exemption applications—
Equitable Life Assurance Society of the United States et al., 52150–52154
Meetings; Sunshine Act, 52154
Self-regulatory organizations; proposed rule changes:
Boston Stock Exchange, Inc., 52155
Applications, hearings, determinations, etc.:
Public utility holding company filings, 52146–52150

Transportation Department
See Coast Guard
See Federal Aviation Administration
See Federal Highway Administration
See Maritime Administration
See National Highway Traffic Safety Administration
NOTICES
Meetings:
NAFTA Land Transportation Standards Subcommittee and Transportation Consultative Group; annual plenary session, 52156

Treasury Department
See Alcohol, Tobacco and Firearms Bureau
See Internal Revenue Service

Veterans Affairs Department
NOTICES
Meetings:
Special Medical Advisory Group, 52162

Separate Parts In This Issue

Part II
Environmental Protection Agency, 52165–52210

Part III
Department of the Interior, 52211–52241

Part IV
Department of Defense, General Services Administration, National Aeronautics and Space Administration, 52243–52257

Part V
Federal Emergency Management Agency, 52259–52279

Part VI
Department of Agriculture, Cooperative State Research, Education, and Extension Service, 52281–52282

Part VII
Department of Defense, General Services Administration, National Aeronautics and Space Administration, 52283–52286

Reader Aids
Consult the Reader Aids section at the end of this issue for phone numbers, online resources, finding aids, reminders, and notice of recently enacted public laws.

CFR PARTS AFFECTED IN THIS ISSUE

A cumulative list of the parts affected this month can be found in the Reader Aids section at the end of this issue.

9 CFR
94 51997
130 51997

10 CFR
Proposed Rules:
40 52049

14 CFR
39 (2 documents) 52010, 52012
71 52015
Proposed Rules:
39 52049

17 CFR
Proposed Rules:
1 52051

21 CFR
640 52016

26 CFR
25 52163

27 CFR
6 52018
8 52018
10 52018
11 52018
Proposed Rules:
178 52054

33 CFR
117 (2 documents) 52021, 52022
Proposed Rules:
117 52057

39 CFR
20 52023

40 CFR
52 52028
300 52062
Proposed Rules:
60 52058
63 52166
194 52061
300 52062

42 CFR
457 52042

44 CFR
Ch. I 52260
295 52260

46 CFR
27 52043

47 CFR
64 52047

48 CFR
Proposed Rules:
2 (2 documents) 52284, 52244
12 52284
32 52244
46 52284
52 (2 documents) 52284, 52244

Rules and Regulations

Federal Register
Vol. 65, No. 167
Monday, August 28, 2000

This section of the FEDERAL REGISTER contains regulatory documents having general applicability and legal effect, most of which are keyed to and codified in the Code of Federal Regulations, which is published under 50 titles pursuant to 44 U.S.C. 1510.

The Code of Federal Regulations is sold by the Superintendent of Documents. Prices of new books are listed in the first FEDERAL REGISTER issue of each week.

DEPARTMENT OF AGRICULTURE

Animal and Plant Health Inspection Service

9 CFR Part 94

[Docket No. 99–096–2]

Change in Disease Status of Portugal Because of African Swine Fever

AGENCY: Animal and Plant Health Inspection Service, USDA.

ACTION: Affirmation of interim rule as final rule.

SUMMARY: We are adopting as a final rule, without change, an interim rule that amended the regulations governing the importation of pork and pork products by adding Portugal to the list of regions where African swine fever exists. We took this action because there has been an outbreak of African swine fever in Portugal. The interim rule restricted the importation of pork and pork products into the United States from Portugal and was necessary to prevent the introduction of African swine fever into the United States.

EFFECTIVE DATE: The interim rule became effective on November 5, 1999.

FOR FURTHER INFORMATION CONTACT: Dr. Gary Colgrove, Chief Staff Veterinarian, National Center for Import and Export, VS, APHIS, 4700 River Road Unit 38, Riverdale, MD 20737–1231; (301) 734–8364.

SUPPLEMENTARY INFORMATION:

Background

In an interim rule effective November 5, 1999, and published in the **Federal Register** on December 29, 1999 (64 FR 72912–72913, Docket No. 99–096–2), we amended the regulations governing the importation of pork and pork products by adding Portugal to the list of regions where African swine fever exists. This action restricted the importation of pork and pork products into the United States from Portugal and was necessary to prevent the introduction of African swine fever into the United States.

Comments on the interim rule were required to be received on or before February 28, 2000. We did not receive any comments. Therefore, for the reasons given in the interim rule, we are adopting the interim rule as a final rule.

This action also affirms the information contained in the interim rule concerning Executive Orders 12372 and 12988, and the Paperwork Reduction Act.

Further, for this action, the Office of Management and Budget has waived the review process required by Executive Order 12866.

Regulatory Flexibility Act

This rule affirms an interim rule that amended the regulations governing the importation of pork and pork products by adding Portugal to the list of regions where African swine fever exists. We took this action because of an outbreak of African swine fever in Portugal. The interim rule restricted the importation of pork and pork products into the United States from Portugal and was necessary to prevent the introduction of African swine fever into the United States.

The following analysis addresses the economic effect of this rule on small entities, as required by the Regulatory Flexibility Act.

The interim rule restricts the importation of pork and pork products into the United States from Portugal. Because Portugal has never exported pork or pork products to the United States, this rule will have no economic effect on U.S. swine importers, hog meat processors, hog producers, or any other entities, large or small.

Under these circumstances, the Administrator of the Animal and Plant Health Inspection Service has determined that this action will not have a significant economic impact on a substantial number of small entities.

List of Subjects in 9 CFR Part 94

Animal diseases, Imports, Livestock, Meat and meat products, Milk, Poultry and poultry products, Reporting and recordkeeping requirements.

PART 94—RINDERPEST, FOOT-AND-MOUTH DISEASE, FOWL PEST (FOWL PLAGUE), EXOTIC NEWCASTLE DISEASE, AFRICAN SWINE FEVER, HOG CHOLERA, AND BOVINE SPONGIFORM ENCEPHALOPATHY: PROHIBITED AND RESTRICTED IMPORTATIONS

Accordingly, we are adopting as a final rule, without change, the interim rule that amended 9 CFR part 94 and that was published at 64 FR 72912–72913 on December 29, 1999.

Authority: Title IV, Pub. L. 106–224, 114 Stat. 438, 7 U.S.C. 7701–7772; 7 U.S.C. 450; 19 U.S.C. 1306; 21 U.S.C. 111, 114a, 134a, 134b, 134c, 134f, 136, and 136a; 31 U.S.C. 9701; 42 U.S.C. 4331 and 4332; 7 CFR 2.22, 2.80, and 371.4.

Done in Washington, DC, this 22nd day of August 2000.

Bobby R. Acord,

Acting Administrator, Animal and Plant Health Inspection Service.

[FR Doc. 00–21899 Filed 8–25–00; 8:45 am]

BILLING CODE 3410–34–P

DEPARTMENT OF AGRICULTURE

Animal and Plant Health Inspection Service

9 CFR Part 130

[Docket No. 97–058–2]

RIN 0579–AA87

Import/Export User Fees

AGENCY: Animal and Plant Health Inspection Service, USDA.

ACTION: Final rule.

SUMMARY: We are changing our user fees for import- and export-related services that we provide for animals, animal products, birds, germ plasm, organisms, and vectors. We are increasing user fees for fiscal years 2001 through 2004 to reflect standard annual increases in expenses and additional cost components. We have determined that the fees must be adjusted annually to reflect the anticipated cost of providing these services each year. By publishing the annual user fee changes in advance, users can incorporate the fees into their budget planning. The user fees pay for the actual cost of providing these services. We are also making some editorial changes to make the

regulations easier to read and eliminate duplication.

EFFECTIVE DATE: October 1, 2000.

FOR FURTHER INFORMATION CONTACT: For information concerning services provided for animals, animal products, birds, germ plasm, organisms, and vectors, contact Dr. Gary Colgrove, Chief Staff Veterinarian, National Center for Import and Export, VS, APHIS, 4700 River Road Unit 38, Riverdale, MD 20737–1231; (301) 734–8364.

For information concerning program operations, contact Ms. Louise Lothery, Director, Management Support Staff, VS, APHIS, 4700 River Road Unit 44, Riverdale, MD 20737–1231; (301) 734–7517.

For information concerning user fees or rate development, contact Ms. Donna Ford, Section Head, Financial Systems and Services Branch, BASE, MRPBS, APHIS, 4700 River Road Unit 54, Riverdale, MD 20737–1232; (301) 734–8351.

SUPPLEMENTARY INFORMATION:

Background

The regulations in 9 CFR part 130 (referred to below as the regulations) list user fees for import- and export-related services provided by the Animal and Plant Health Inspection Service (APHIS), U.S. Department of Agriculture (the Department), for animals, animal products, birds, germ plasm, organisms, and vectors. We are amending the user fees for these import- and export-related services to reflect the increased costs of providing the services.

These user fees are authorized by § 2509(c)(1) of the Food, Agriculture, Conservation, and Trade Act of 1990, as amended (21 U.S.C. 136a). APHIS is authorized to establish and collect fees that will cover the cost of providing import- and export-related services for animals, animal products, birds, germ plasm, organisms, and vectors.

Since fiscal year (FY) 1992, APHIS has received no directly appropriated funds to provide import- and export-related services for animals, animal products, birds, germ plasm, organisms, and vectors. Our ability to provide these services depends on user fees. We change our user fees through the standard rulemaking process of publishing the proposed changes for public comment in the **Federal Register**, considering the comments, publishing the final changes in the **Federal Register**, and making the new user fees effective 30 days after the final rule is published. This rulemaking process can be lengthy. As a result, our user fees have usually reflected less than our actual cost to provide services. Since implementing these user fees in 1992, we have only adjusted the user fees for cost changes twice. Most of the user fees have not been adjusted for cost changes since 1996—four years.

For our user fees to cover our costs so that we can continue to provide services and to inform our customers of user fees in time for advance planning, we proposed to set user fees for our import- and export-related services in advance for fiscal years 2000 through 2004. Our proposal was published in the **Federal Register** on September 30, 1999 (64 FR 52680–52694, Docket No. 97–058–1). The proposed user fees were based on our costs of providing import- and export-related services in FY 1999, including costs for rent, equipment replacement, billings, collections, and maintaining a reserve, plus adjustments for inflation and anticipated annual increases in the salaries of employees who provide the services. We included costs for rent because we were directed to do so as the result of an audit. We included costs for equipment replacement and maintaining a reserve because the Department determined that these costs are part of the full cost of providing services. We included costs for billings and collections because we are assessed for these costs and our user fees have not previously contained a component for them. We estimated inflation at 2.3 percent a year based on the Consumer Price Index (CPI). The estimated CPI is published in the Economic Assumptions table of the Budget for the U.S. Government each year. We used estimated pay increases of 4.4 percent for FY 2000 and 3.9 percent for FY 2001 through FY 2004, published by the U.S. Treasury Department, to calculate increases in the direct labor costs each year.

We also proposed to consolidate the hourly and premium hourly rate user fees for import- and export-related services. These fees were listed in §§ 130.3, 130.5, 130.9, 130.10, and 130.21. We proposed to list them in one new section, § 130.30. In addition, we proposed to list the minimum user fee for import- and export-related services in one section—§ 130.30. This fee was repeated in §§ 130.3, 130.5, 130.6, 130.7, 130.9, 130.10, and 130.21. These proposed changes were intended to eliminate duplication and make the hourly, premium hourly, and minimum rates easier for our customers to locate.

Additionally, since the Miami Animal Import Center has never been used as an exclusive use quarantine facility, we proposed to remove user fees for the exclusive use of the Miami Animal Import Center from the listing in § 130.3.

We solicited comments concerning our proposal for 60 days ending November 29, 1999. We received 68 comments by that date. They were from representatives of the artificial insemination industry, exporters, veterinarians, and a State department of agriculture. They are discussed below by topic.

Clarification

Comment: Are you adding costs for inflation at 2.3 percent a year based on the Consumer Price Index in addition to the proposed pay increases?

Response: We increased the direct labor cost element by the estimated pay increases. We increased all other operating costs (i.e., direct materials, indirect labor, utilities) by 2.3 percent a year for inflation based on the Consumer Price Index.

Opposition to User Fees or Increases in General

Comment: We oppose the proposed increases in import- and export-related user fees.

Response: We are no longer appropriated funds for these services. Most of these user fees have not changed since 1996; some have been in effect longer. Therefore, to continue providing these services, we must recover our costs from the customers who benefit from our services. We are authorized to do this through user fees. As our costs increase, we must increase our user fees. We will continue to monitor our fees and control our operating and staffing costs to provide services as inexpensively as possible. Therefore, we are making no change to the rule in response to this comment.

Comment: User fees should be increased as the need arises. They should not be set several years in advance.

Response: Our import- and export-related user fees are calculated based on our employee salaries and other costs as described in the proposal. We know from budget estimates and economic forecasts that these costs are expected to increase by a small percentage each year.

As discussed in our proposal, we plan to review these user fees each year, and we continually evaluate our funding needs. The purpose of multi-year user fee rates is to allow the user fees to increase as our need for additional funding increases and to allow users to incorporate the fees into their budget planning. Therefore, we are making no change to the rule in response to this comment.

Comment: If user fees are established for multiple years in advance, then user

fee customers will not have an opportunity to comment about user fee rates during the period that those user fees are in effect. The user fee rates will not be responsive to industry needs.

Response: By setting user fees in advance for a 5-year period, we are responding to comments we received in response to past proposals. Those commenters stated that it was difficult to make business plans without knowing in advance when fees would change and by how much. Also, commenters in the past have objected to large fee increases, even though they occurred infrequently. We believe adopting user fees for 5 years in advance addresses these concerns. Under this rule, business planning should be easier, and fee increases will be more gradual. Customers have had the opportunity to comment on the user fees through this rulemaking process. In addition, customers may offer suggestions and comments on user fees at any time. For example, APHIS established a flat rate use fee in lieu of the hourly rate user fee for embryo collection center inspection and approval at the request of an industry association. (See 63 FR 71728–71729, Docket No. 98–005–2, December 30, 1998). Therefore, we are making no change to the rule in response to this comment.

Comment: Producers are already paying enough taxes, and these user fees are double taxation.

Response: A tax is money paid to support Government operations that benefit the general public. A user fee is money collected for a specific service provided to a readily identifiable recipient. The Food, Agriculture, Conservation, and Trade Act of 1990, as amended (referred to below as the Act) authorizes the Department to prescribe and collect user fees to reimburse the cost of carrying out certain import- and export-related services for animals, animal products, and veterinary diagnostics. The Act further states that ''[a]ny person for whom an activity related to the importation, entry, or exportation of an animal, article, or means of conveyance or relating to veterinary diagnostics, is performed pursuant to the section, shall be liable for payment of fees assessed.'' APHIS user fees are designed to recover and fund the cost of providing specific services. As such, our user fees are fees for specific services provided to a certain portion of the public and, therefore, do not constitute a tax. Therefore, we are making no changes based on this comment.

Comment: Increasing the user fees places an undue burden on U.S. exports at the same time the Government is spending tax dollars to promote the export of agricultural products.

Response: Congress directed us to charge user fees for these services. Congress decides how tax dollars are allocated. Congress has not allocated additional funds for our import- and export-related services for animals and animal products. Therefore, in order to continue providing import- and export-related services, we must charge user fees, and, under our user fee authority, we must charge user fees which will recover the full cost of providing services. We realize that increases in the user fees will increase the up-front cost of doing business for importers and exporters. However, before APHIS began collecting user fees for import and export services, users were subsidized by the taxpayers in general. Those who received services from APHIS were not charged and the services were paid for through appropriated taxpayer dollars. As appropriated funds are no longer available to pay for these services, users must pay for them through user fees. We attempt to minimize the cost of our services to keep APHIS user fees at the lowest possible level. We do not anticipate that exports will decline significantly as a result of these increases in user fees. Therefore, we are making no changes based on this comment.

Comment: The U.S. agricultural economy is in bad financial condition. One of the ways we can boost the U.S. agricultural economy is to increase exports of animals and animal products. We currently have a negative balance of trade in germ plasm. Economic crises in Asian countries, the strong U.S. dollar, and European Union subsidies of live animal exports are examples of current trends that keep U.S. agricultural exports low. These user fee increases will escalate prices, make U.S. animals less competitive for export, and seriously hamper the ability of U.S. exporters to increase exports of U.S. agricultural products. Currently, other competitor countries, such as Canada, have no user fees.

Response: Although some countries do not currently charge for import- and export-related services, user fees for these services are being adopted by more and more countries. In fact, as of May 3, 1995, Canada charges user fees for certain import- and export-related animal health services (see May 3, 1995, Canada Gazette Part II, Vol. 129, No. 9, SOR/DORS/95–198). Therefore, we do not believe that U.S. exporters are at a competitive disadvantage compared with exporters in other countries because of APHIS user fees. Therefore, we are making no changes based on this comment.

Comment: You should make a greater distinction between imports and exports. Live animal exports should be given greater priority and provided with better and less expensive services from APHIS because they are absolutely essential to the U.S. economy.

Response: Our user fees do not distinguish between imports and exports. Our user fees are calculated to recover the full costs of the services that we provide. Because of budget constraints, we do not have the option to charge user fees that recover less than the full cost of providing a service. If we did so, we would not collect enough money to support the service. However, we have attempted to minimize the cost of our services, thereby keeping APHIS user fees at the lowest possible level. We are making no changes based on this comment.

Fees Related to Specific Services

Comment: The proposed increases for the hourly rate user fees and the user fees in § 130.8(a) for semen imports are too high. The hourly rate user fee would increase by $20, from $56.00 to $76.00 per hour. The user fee for semen imports would increase from $39.50 to $54.00.

Response: This is the first increase in these user fees since 1996 (see 61 FR 20421–20437, Docket No. 92–174–2, May 7, 1996). We need to increase these user fees because, as stated in the proposal, operating costs have increased. In addition, the fees established in 1996 did not take into account our costs for rent, equipment replacement, billings, collections, and maintaining a reserve. The fees in this rule reflect both the increase in costs and the inclusion of cost components that had not been included before. They also reflect projected salary increases for the employees who provide the services. Therefore, we are making no changes based on this comment.

Comment: The proposed user fees in § 130.8(a) for germ plasm exports are too high. The user fee for semen exports would increase from $33.50 to $45.00 per certificate. The user fee for embryos exports would increase from $54.75 to $74.00 per certificate in the first year and up to $83.00 per certificate by the year 2003. We realize that there has been no adjustment to the use fee for the endorsement of export certificates for germ plasm since it was first implemented in January 1994. However, the Consumer Price Index (CPI) over this period of time (January 1, 1994 through January 2000) shows an increase of approximately 21 percent,

while the proposed user fee increase is approximately 34.5 percent, which is well above the CPI.

Response: As stated in the proposal, operating costs have increased since these user fees were established in 1994 (see 58 FR 67647–67656, Docket No. 92–042–2, December 22, 1993). Also, the original user fees did not take into account our costs for rent, equipment replacement, billings, collections, and maintaining a reserve . We did not propose changes in these user fees in 1996 because the user fees had not been in place long enough to evaluate whether they were sufficient to provide for full cost recovery. The fees in this rule reflect both the increase in costs and the inclusion of cost components that had not been included before. They also reflect projected salary increases for the employees who provide the services. Therefore, we are making no changes based on this comment.

Comment: We are especially concerned about the magnitude of the proposed changes in user fees for the inspection of embryo collection facilities. The user fee for the inspection of embryo collection facilities is increasing from $278 to $337 in the first year and to $380 by the year 2003.

Response: In 1999, the user fee for the inspection of embryo collection facilities was revised from an hourly rate user fee to a flat rate user fee in response to a request from industry (see 63 FR 71728–71729, Docket 98–005–2, published December 28, 1998 and effective January 29, 1999). The user fee was calculated to reflect the average annual cost of providing the service, including the time to provide the service and travel time to the facility. The flat rate annual user fee was arrived at using the average number of hours required for an APHIS inspector to complete an inspection (including travel time), the average number of inspections performed during a year (2 per facility), the average direct labor involved, and a proportional share of support costs, overhead, and departmental charges. We did not, however, factor in our costs for rent, equipment replacement, billings, collections, and maintaining a reserve, which account for most of the increase in the fee in this rulemaking. The fee increases over fiscal years 2000 to 2004 also anticipate annual increases in the salaries of the employees who provide the services. We have made every attempt to keep our costs and our user fees down to the lowest reasonable level. The increases in the user fee are necessary to recover the full cost of our services. Therefore, we are making no changes based on this comment.

Comment: User fees for export certificates should not be increased because exporters print the certificates and prepare them. APHIS should, therefore, charge only a minimal fee for its services.

Response: The user fee for the endorsement of export health certificates is calculated based on the costs we incur to provide our services. APHIS employees endorse export health certificates in accordance with the regulations in 9 CFR part 91. An APHIS endorsement certifies that animals and animal products being exported from the United States are free from communicable diseases. Direct labor activities may include the following: Telephone time for providing information about the export health certification process, mailing information to customers, protocol research, review of paperwork such as health certificates, verification of laboratory test results, confirmation that the importing country's requirements have been met, paperwork completeness review, certification statements review, endorsement/signing, placing an official seal on documents if needed, and completing APHIS paperwork related to the endorsement. Many of the activities listed above must be performed to make it possible for APHIS employees to endorse the export health certificates. We used our accounting data and surveys of APHIS locations nationwide where export health certificates are endorsed to identify the amount of direct labor time APHIS employees spend providing these services. In addition, some people use preprinted forms, while others do not. The user fees were based on averages; therefore, we factored the variations in the type of forms into the user fee calculations. An example showing a minimal user fee for the use of preprinted forms with very routine information is the user fee in § 130.20(b)(1) for endorsing export health certificates for nonslaughter horses to Canada. Even though these horses all require a test, the endorsement process is so routine that we established a separate minimal per certificate user fee instead of a user fee calculated based on the number of horses and the number of tests or vaccinations. Therefore, we are making no changes based on this comment.

Comment: There appear to be inequities in § 130.8 between the user fees for semen exports and those for embryos exports. The user fees for embryo exports are significantly higher than the user fees for semen exports. In addition, the same fee applies for certificates for semen, regardless of how many doses are covered by the certificate. On certificates for embryos, however, the basic fee covers only up to five donor pairs on a certificate; an additional fee applies for each additional group of donor pairs (up to five pairs per group) on the same certificate.

Response: The average time required for us to provide export-related services for embryos is higher than the average time to provide those services for semen. Specifically, we have found that more time is required to answer questions about exporting embryos in advance and to review documentation and statements on the certificates that accompany the embryos for exportation. Therefore, the calculation for the user fees for exporting embryos includes more direct labor hours, and that results in the higher cost. The intention in the tiered user fee structure for the export-related services for embryos was not to limit the number of donor pairs on a certificate, but to recognize the lower costs to provide the same service for the additional donor pairs. We determined that there is a marginal cost decrease to endorse additional groups of donor pairs on the same export health certificate. User fees are calculated to recover only the cost of services. Therefore, the tiered user fee rate, with a lower fee for additional groups of donor pairs on the same certificate, is appropriate, and we are making no changes based on this comment.

Comment: The user fee schedule for inspections of embryo collection facilities should have an initial fee at one rate and a renewal fee at a reduced rate.

Response: Our annual inspection of an already approved embryo collection facility takes a certain amount of time. The first inspection of a facility may take a little longer, but we are not charging more for that first year; instead we built it into the annual user fee so the cost of the inspections is averaged. Therefore, we are making no changes based on this comment.

Comment: We request that you consider establishing a maximum fee for exporting a small shipment of livestock. We suggest a small shipment be 30 or fewer pigs, sheep, or goats, or 15 or fewer dairy or beef animals. These numbers will fill approximately two aircraft pallets. It is our experience that the processing and inspection at the port of export for this size shipment requires an hour or less of APHIS veterinary personnel time.

Response: We have established a maximum user fee for export health certificates that is intended as a cap for the user fee for the endorsement of export health certificates for large

shipments (see 65 FR 16122–16124, Docket 98–003–2, March 27, 2000). The maximum user fee ensures that our fixed costs have been covered for large shipments. We have reviewed our flat rate user fees for export health certificates and believe that these user fees are fair for any size shipments, even small shipments. Based on the examples provided in the comment, the small shipment maximum being requested would apply to export-related services provided at our hourly rate user fee. Under § 130.20(c), when exporters are able to have these endorsements done at the inspection site at the same time that we provide inspection and supervision services, then the hourly rate user fee charged for the inspection and supervision services also covers the endorsement services. The hourly rate user fees are based on the actual number of hours it takes to provide our services. Therefore, we believe that these hourly rate user fees are also fair, and we are making no changes based on this comment.

Comment: The user fee in § 130.20(a) for nonslaughter horses to Canada is too low because of the required tests. In addition, the processing of the export health certificates for nonslaughter horses to Canada has changed over time. When the user fee was established, Canada required a separate certificate for each horse. Since 1995, Canada has allowed more than one horse to be included on a certificate, under certain conditions. Therefore, the user fee should be revised to reflect this change. The regulations need to clarify the charges for various forms used for this service. The costs for export certifications with multiple horses are not adequately covered by the user fee for nonslaughter horses to Canada.

Response: The user fee for endorsing the certificate for nonslaughter horses to Canada is lower than the user fee for other endorsements requiring the verification of tests or vaccinations. This is because most certificates for nonslaughter horses to Canada are preprinted forms with complete information (VS form 17–145). Also, there is a single identification to check for these horses versus multiple identifications for cattle and other animals. In addition, there is a single statement on the certificate for these horses, as opposed to multiple statements for cattle and other animals. Consequently, endorsing certificates for nonslaughter horses to Canada is a very standard procedure that takes significantly less time than endorsing other certificates that require the verification of tests or vaccinations. This is why, when we initially established the user fee, we identified it separately from user fees for other endorsements. As the commenter pointed out, however, the certificates initially covered a single nonslaughter horse to Canada. Since that time, exporters have also used VS form 17–140 to cover multiple nonslaughter horses to Canada. Certificates covering multiple horses take longer to process than certificates covering only a single horse. Therefore, we are amending § 130.20(a) to specify that the base user fee covers the first animal on the certificate and that each additional animal on the certificate will increase the fee by $4.

Comment: The minimum user fee for inspecting pet birds entering the United States should not be increased. APHIS should establish a separate minimum user fee for pet birds that would be lower than the minimum user fee for other services.

Response: The minimum user fee covers the basic minimum service that we provide. The minimum user fee was developed primarily to cover the costs of handling unusually small importations at ports of entry. Our user fees are calculated to represent the average costs of providing the service. We cannot predict or control the frequency of unusually small importations. Therefore, we cannot account for the cost of providing service for them when calculating our user fees. To ensure that our basic costs are always covered, we charge a minimum user fee. At a minimum, any service we provide requires a certain amount of fixed costs. These fixed costs include the direct costs of providing the service and indirect costs to support providing a service; for example, to process the paperwork and bill for the services. We cannot establish a lower minimum user fee for inspecting pet birds entering the United States or we would not recover the full costs of providing those services. Therefore, we are making no changes based on this comment.

Comment: The user fees in § 130.20 for export certificates do not capture all of the preparatory services that APHIS provides. The accredited veterinarian checks with the area veterinarian in charge for the receiving country's requirements, which generally takes 10–15 minutes, with an additional 10–15 minutes for clarification. The area veterinarian in charge and export/legal documents examiner review the draft and identify corrections. The accredited veterinarian sends the original to the area veterinarian in charge for endorsement. This is a facet of improved customer service and significantly reduces the situations where animals are loaded but APHIS can't endorse the export certificate. APHIS should increase the user fee to capture all of the costs of the preparatory services.

Response: These user fees are calculated to represent the average costs of providing the service. Therefore, some of the user fees may appear to be too high or too low based on an individual's experience, but in fact represent the average cost of providing the service. In the aggregate, the export certification user fees cover our costs and are not too low. The user fees increases in this document should allow us to continue to adequately recover export certification costs. We are making no changes based on this comment.

Comment: Services that APHIS provides under § 130.7 entail the same amount of work for in-transit cattle, horses, and swine. Therefore, APHIS should adjust the user fees to make them the same.

Response: The main difference in the calculations to determine the user fees for in-transit cattle, horses, and swine is the average number of animals (head) inspected per entry. The number of head per entry varies by type of animal and by port of entry. We calculated these user fees to reflect the average cost of service for each type of animal. We started with the total cost of providing the service and divided that by the average number of animals in a shipment as follows: 200 swine, 35 cattle, and 7 horses. Therefore, the calculations resulted in lower user fees for swine and higher user fees for horses. We believe that this was an equitable way to determine the appropriate user fees to pay for the services we provide for in-transit cattle, horses, and swine. Therefore, we are making no changes based on this comment.

Comment: The user fees in § 130.20 do not capture all of the services that APHIS provides for export health certificates that do not require verification of tests or vaccinations, but do require APHIS to verify statements made by an accredited veterinarian concerning the animals to be exported and/or the herd of origin. When APHIS must verify certification statements, then the user fee for the verification of tests or vaccinations should be used.

Response: We calculated these user fees to represent the average costs of providing the service. Therefore, some of the user fees may appear to be too high or too low based on an individual's experience, but in fact represent the average cost of providing the service. We did incorporate the time to review occasional certification statements into

the calculation for the user fee for the endorsement of export health certificates that do not require tests or vaccinations. In the aggregate, the export certification user fees cover our costs and are not too low. The user fee increases in this document should allow us to continue to adequately recover export certification costs. Therefore, we are making no changes based on this comment.

Fees Relative to Services Rendered

Comment: The APHIS National Center for Import and Export (NCIE) personnel and the local APHIS area veterinarian in charge coordinate and facilitate the export of animals and animal products, including germ plasm. From early 1999 on, we have noticed an increase in job requirements and a gradual reduction in experienced personnel, resulting in a decrease in the ability of NCIE staff to respond to issues related to the exportation of germ plasm. In addition, our local area veterinarian in charge has a large geographic area of responsibility, and we often have to work around his schedule for our outbound shipments. APHIS helps us with serious issues regarding animal semen detained in customs in foreign countries and with health regulation questions. Timely information and quick action can make a difference in these areas. Delays in responses from APHIS can cause extra expenses and delays and increase the risk of losses. We respectfully request that the number of experienced staff be increased to a level such that staff can provide services needed by the artificial insemination industry to facilitate the trade of germ plasm in a timely fashion. We urge that the structure of the NCIE staff be given consideration to effectively support the trade of U.S. goods, including germ plasm.

Response: Some experienced personnel have left and new people are being hired and trained to provide the required import- and export-related user fee services for animals, animal products, and germ plasm. We provide a wide range of services and believe that structure of our staff is effective for providing those services. Our staff provides both user fee services and services covered by appropriations. If we were to consider restructuring to provide staff to focus solely on user fee services for the germ plasm industry, we would have to recalculate the germ plasm user fees, which could result in significant increases in those user fees. We are making no changes based on this comment.

Comment: We refer to the APHIS Retrieval System on the Internet for the latest health requirements for other countries. In late 1999, there was an error in the European Union requirements listed in the system, and the Japanese health requirements were not listed in the system. If user fees are increased, then we request better service.

Response: We provide information about other countries' requirements as a service for our customers. We attempt to keep the information in our APHIS Retrieval System current. We are dependent, however, on receiving timely information from other countries and organizations. We are making no changes based on this comment.

Miscellaneous

Comment: You should provide forms for export health certificates that can be used with a laser printer instead of the older forms using carbon paper.

Response: We use many different forms for our import- and export-related services for animals, animal products, and germ plasm. Some of these forms are available as computerized forms that can be used in laser printers. We are continuing the process of converting our forms to make them easier to use, including forms that can be used in laser printers.

Comment: Money from user fees should be used to streamline the certification and endorsement process through electronic transfer of papers, signatures, and record retrieval. An electronic streamlined process could reduce costs.

Response: We are currently developing a system that will provide a wide range of on-line services for the electronic submission, payment, review, and receipt of permits. We also intend to develop additional electronic systems for other services that we provide. APHIS services are continually adjusted to meet changing needs. We are constantly trying to improve our services and reduce costs.

Comment: APHIS should streamline the paperwork for pet birds by combining the current pet bird agreement and the avian release form into a single document for the inspection and release of pet birds.

Response: We are looking at streamlining the pet bird import process, including forms.

Comment: Please clarify § 130.20(b)(1), in the second sentence to say ''tests or vaccinations'' in place of ''tests'' to be consistent with the wording throughout the paragraph for these user fees.

Response: In 1996, we amended § 130.20(a) and (b)(1) to clarify that the user fees in § 130.20(b)(1) apply when APHIS personnel must verify tests or vaccinations (see 61 FR 20421–20437, Docket 92–174–2, May 7, 1996). At that time, we inadvertently failed to make the change suggested by the commenter. We are doing so in this final rule.

Comment: For the user fees in § 130.7(a), are registered horses considered ''Registered animals, all types'' or ''Horses other than slaughter and in-transit''?

Response: Most horses are registered horses; therefore, our intention has always been that the category ''Horses, other than slaughter and in-transit'' was to include registered horses. To clarify this, we are changing the categories in the table for registered animals and horses to read ''Registered animals (except horses)'' and ''Horses (including registered horses), other than slaughter and in-transit.''

Comment: Under § 130.7, there are categories for ''Poultry imported for any purpose'' and ''Slaughter animals, all types,'' but no category for slaughter poultry. The same amount of inspection and paperwork is required for slaughter cattle, swine, turkeys, or chickens. APHIS should consider adding a category in § 130.7 for in-transit poultry.

Response: The user fee for poultry imported for any purpose includes slaughter poultry and in-transit poultry. We charge the user fee for poultry imported for any purpose for in-transit poultry and slaughter poultry because the same amount of time is required to inspect the poultry. To clarify this, we are changing the category in the table for slaughter animals to read ''Slaughter animals (except poultry).''

Comment: Under § 130.7(a), there are user fees for ''Feeder animals (calves, cattle, sheep, and swine)'' and ''Horses, other than slaughter and in-transit,'' but no category for ''Feeder horses.'' APHIS should establish a user fee category for ''Feeder horses'' for horses 9 months or younger.

Response: In our experience, the importation of horses strictly for feeding purposes is rare. Therefore, we are not publishing a user fee for feeder horses. If a large load of horses is imported strictly as feeder animals, then we would determine that at the port of entry and would, under § 130.30(a)(13), charge our hourly rate user fee for the services required for those horses. Therefore, we are making no changes based on this comment.

Intervening Amendments

Our proposed rule was published on September 30, 1999. Between that date and the publication of this final rule, other final rules amending part 130 have been published. The changes made by

those final rules are described below. This final rule reflects those changes.

On September 23, 1999, we published in the **Federal Register** (64 FR 51421–51422, Docket No. 98–006–2) a final rule that amended user fees for import- or entry-related services provided for animals presented at airports, ocean ports, and rail ports. The rule became effective on November 29, 1999. The rule replaced the flat rate user fee in § 130.7 with hourly rate user fees in § 130.9.

On December 3, 1999, we published in the **Federal Register** (64 FR 67699–67670, Docket No. 98–004–1) a final rule that made miscellaneous, nonsubstantive changes in part 130. The rule was effective as of November 29, 1999. The rule revised the section heading for § 130.2; clarified the ruminants category in § 130.6 to include breeder ruminants; moved user fees for pet birds out of § 130.8 and into § 130.10; revised the section heading for § 130.10; and revised several categories in § 130.20 for clarity by adding nonanimal products to the animal products category, moving the nonslaughter horses to Canada category from the table in paragraph (a) into the table in paragraph (b)(1), and revising the poultry and slaughter animals categories to clarify that slaughter poultry are included in the poultry category.

Also on December 3, 1999, we published in the **Federal Register** (64 FR 67697–67698, Docket No. 98–052–2) a final rule that amended user fees for the inspection for approval of biosecurity level three laboratories. The rule became effective on January 3, 2000. The rule replaced the hourly rates for this service in § 130.9 with a flat rate user fee in § 130.8 to cover all the costs of inspection related to approving a laboratory for handling one defined set of organisms or vectors.

On June 20, 2000, we published in the **Federal Register** (65 FR 38179–38182, Docket 98–045–2) a final rule that amended user fees for inspection and approval of various pet food facilities. The rule became effective July 20, 2000. The rule replaced the hourly rates for this service in § 130.21 with flat rate user fees in new § 130.11. The rule also moved all of the flat rate user fees contained in § 130.8 that are charged to import/export facilities or establishments into new § 130.11.

User Fees for Animals and Birds Quarantined in APHIS-Owned or Operated Quarantine Facilities

Sections §§ 130.2 and 130.3 contain fees for animals and birds quarantined in APHIS-owned or operated quarantine facilities, including APHIS Animal Import Centers. Users must make advance reservations for space at these facilities. To avoid unfairness, for all space reserved prior to the date this final rule is published, we will charge the user fee in effect at the time the reservation was made. For space reservations made after the date this final rule is published, we will charge the user fees adopted in this final rule.

Effective Date

Our proposal included user fees for fiscal years 2000 through 2004. Because this rule will not be effective until October 1, 2000, our final rule does not include fee increases for any portion of FY 2000.

Therefore, for the reasons given in the proposed rule and in this document, we are adopting the proposed rule as a final rule, with the changes discussed in this document.

Executive Order 12866 and Regulatory Flexibility Act

This rule has been reviewed under Executive Order 12866. The rule has been determined to be significant for the purposes of Executive Order 12866 and, therefore, has been reviewed by the Office of Management and Budget.

In accordance with 5 U.S.C. 604, we have prepared a final regulatory flexibility analysis regarding the economic effects of this rule on small entities. Below is a summary of the economic analysis for the changes in APHIS user fees in this document. The discussion also serves as our cost-benefit analysis under Executive Order 12866. A copy of the full economic analysis, which includes comparisons of the change in collections for each user fee, is available for review at the location listed in the **ADDRESSES** section at the beginning of this document.

Need and Objective of This Rule

These user fees are authorized by § 2509(c)(1) of the Food, Agriculture, Conservation, and Trade Act of 1990, as amended (21 U.S.C. 136a). APHIS is authorized to establish and collect fees that will cover the cost of providing import- and export-related services for animals, animal products, birds, germ plasm, organisms, and vectors.

Since FY 1992, APHIS has received no directly appropriated funds to provide import- and export-related services for animals, animal products, birds, germ plasm, organisms, and vectors. Our ability to provide these services depends on user fees. We change our user fees through the standard rulemaking process of publishing the proposed changes for public comment in the **Federal Register**, considering the comments, publishing the final changes in the **Federal Register**, and making the new user fees effective 30 days after the final rule is published. This rulemaking process can be lengthy. As a result, our user fees have not always reflected the actual cost of providing services.

For our user fees to cover our costs so that we can continue to provide services and to inform our customers of user fees in time for advance planning, we are setting user fees for our services in advance for fiscal years 2001 through 2004. The user fees are based on our costs of providing import- and export-related services in FY 1999, including costs for rent, equipment replacement, billings, collections, and maintaining a reserve, plus adjustments for inflation, plus anticipated annual increases in the salaries of employees who provide the services. Because we had initially projected having the new fees in place sometime in FY 2000, our analysis covered fiscal years 2000 through 2004. We used estimated pay increases of 4.4 percent for FY 2000 and 3.9 percent for FY 2001 through FY 2004 published by the U.S. Treasury Department to calculate increases in the direct labor costs each year. We estimated inflation at 2.3 percent a year based on the Consumer Price Index (CPI). The estimated CPI is published in the Economic Assumptions table of the Budget for the U.S. Government each year.

Changes in Program Collection and Cost Estimates

In our proposed rule, we made certain collection and cost estimates based on the best data available at the time. Actual collections and costs varied somewhat from the estimates, but did not cause a significant difference in the scope of the program or the need to revise the fees as proposed. Our full analysis has been updated to reflect the new data.

The calculations underlying the proposed rule assumed an April 1, 2000, implementation date. Implementing the rule on July 1, 2000 will reduce the anticipated FY 2000 collections by $1,207,783. In FY 1999, the collections actually received totaled $13,038,181 instead of the $11,940,080 shown in the proposed rule as the estimated current annual collections. In the proposed rule, we based the estimated current annual collections and the projections for fiscal years 2000–2004 on FY 1998 collections and volumes, respectively. Total collections and volumes for FY 1999 were not available when the proposed rule was published. The following

summary table shows annual expenses for providing import- and export-related services, current collections, increases in collections from the user fee changes, and projected reserve amounts.

Calendar dates:	FY 1999	FY 2000 [1]	FY 2001	FY 2002	FY 2003	FY 2004	Total FY 1999–FY 2004
Operating reserve, start of year	$382,142	$154,697	($2,112,651)	($706,754)	$749,163	$2,471,687	.....
Annual income:							
Current collections[2]	13,038,181	13,038,181	13,038,181	13,038,181	13,038,181	13,038,181	$78,229,086
Proposed collections	0	1,207,783	5,245,795	5,655,334	6,336,962	6,817,646	25,263,520
Total income	13,038,181	14,245,964	18,283,976	18,693,515	19,375,143	19,855,827	103,492,606
Annual expenses[3]	13,265,626	16,513,312	16,833,079	17,237,598	17,652,619	18,078,413	99,580,647
Income, less expenses	(227,445)	(2,267,348)	1,450,897	1,455,917	1,722,524	1,777,414	.....
Operating reserve, end of year	154,697	(2,112,651)	(661,754)	749,163	2,471,687	4,249,101	.....
Months (no.)	0.00	0.00	0.00	0.52	1.68	2.82	.....

[1] FY 2000 estimates are based on an estimated implementation date for the proposed user fees of July 1, 2000.
[2] Projections for FY 2000–2004 are based on actual FY 1999 volumes.
[3] The annual expenses shown in the table in the FY 1999 column and in the FY 2000 column reflect expenses constrained by income from user fee collections. Our user fees were not high enough in FY 1999 to provide the level of service delivery requested for import- and export-related activities. Our current user fees are approximately $2.1 million below the performance level of services requested. Even with the user fee increases, using an estimated effective date of July 1, 2000 for the FY 2000 user fees, we anticipate that in FY 2000 our user fee collections would be over $2 million below the level of anticipated service requests. To constrain expenses down to equal income, we would be required to restrict services until user fee increases can be implemented. The user fee increases will allow us to meet customer demand and build an adequate reserve. Therefore, once implemented, service restrictions will no longer be required.

Effects on Small Entities

User fee changes could affect some importers and exporters of live animals, animal products, birds, germ plasm, organisms, and vectors. Any of these importers or exporters whose annual sales total less than $5 million is a small entity according to the Small Business Administration (SBA). We do not have adequate information to determine the number of entities who import or export live animals and qualify as a small entity. Data from the 1995 Bureau of Census indicates that the majority of agricultural entities who deal in less valuable animals, such as feeding or slaughter animals, can be considered small. This may not be the case for entities dealing exclusively in more valuable animals. While there is a wide range in the size of entities who use our import- and export-related services, our experience shows that as many as 50 percent may be considered large.

The profit margins of some entities could decline as user fees for import- or export-related services are increased. However, the user fee increases are generally small in dollar value. Over the 5 years, more than 57 percent of the individual user fee increases are $1.00 or less, and more than 88 percent are less than $10.00. In addition, the user fees represent a small fraction of the value of the affected animals. Purchase and import costs for importing a breeding grade animal into the United States can range between $1500 and $5000 per head. Therefore, the user fee increases are not generally expected to reduce profits or impede imports or exports. Indeed, entities directly affected by this rule are not likely to bear the full burden of the user fee increases, as some of the cost increases are expected to be passed on to the purchasers of these imported or exported animals or animal products.

In our proposal, we solicited comments on the potential effects of the proposed action on small entities. In particular, we sought data and other information to help us better determine what effects, if any, this rule would have on the small entities mentioned above. We received no comments providing specific data in relation to the proposed rule's initial regulatory flexibility analysis, but commenters expressed concern that the proposal could negatively affect U.S. entities that export germ plasm by increasing their costs.

In our initial regulatory flexibility analysis, we agreed that the profit margins of some entities could decline as user fees for import- or export-related services increase under this rule. The commenters did not provide any data. Therefore, we are unable to determine with more specificity the effects of this rule on small or large entities that export germ plasm from the United States.

Alternatives

One alternative to this rule would be to make no changes to the current user fees. We do not consider making no changes to the current user fees a reasonable alternative because we would not recover the full cost of providing the import- and export-related services. Since 1992, Congress has not appropriated funds for these services; these services have been paid for through user fees charged to the customer or reimbursable agreements. Therefore, if we had chosen this alternative and made no changes to the current user fees, funds would not be available to continue to provide services at a level sufficient to meet customer demand.

Another alternative to this rule would be to either exempt small businesses from these user fees or establish a different user fee structure for small businesses. APHIS cannot exempt certain classes of users, such as small businesses, from the user fees, and cannot charge user fees that recover less than the full cost of providing the service. In addition, every business, including small businesses, using a government service needs to pay the cost of that service, rather than having other businesses pay a disproportionate share or passing those costs on to the general public, who are not the primary beneficiary of the service. Therefore, we do not consider exempting small businesses from these user fees or

establishing a different user fee structure for small businesses as viable options.

Another alternative to the user fee changes in this rule would be to calculate the increases for the 5-year period and then spread the changes evenly in annual increments. The largest change from the current user fees to the FY 2000 user fees comes from the additional administrative support cost components: Rent, billing costs and collections expenses, and equipment capitalization. APHIS is already incurring these costs; therefore we need to recover these costs through user fees. If we had proposed these increases phased in over the 5-year period, it would benefit users in FY 2000 because they would not pay a large increase in the first year. However, most of these user fees have not been changed since FY 1996 and the current user fees no longer reflect the cost of providing import- and export-related services. Therefore, if we implemented this alternative, the user fees would still not accurately reflect the costs in FY 2000, and we would not recover the costs of providing import- or export-related services, so this option is not viable. We are offering a multi-year plan so that businesses will know the annual changes in advance and can incorporate them into their budgetary plans. The alternative would be to continue as we have with occasional large increases instead of the initial increase to bring the user fees up to the cost of providing services and implementing annual changes as we have in this document.

Cost Benefit Analysis

The benefit of user fees is the shift in the payment of services from taxpayers as a whole to those persons who are receiving the government services. While taxes may not change by the same amount as the change in user fee collections, there is a related shift in the appropriations of taxes to government programs, which allows those tax dollars to be applied to other programs that benefit the public in general. Therefore, there could be a relative savings to taxpayers as a result of the changes in user fees.

The administrative cost involved in obtaining these savings will be minimal. APHIS already has a user fee program and a mechanism for collecting user fees in place. This rule will update existing user fees in the system. Therefore, increases in administrative costs will be small. Because the savings are sufficiently large, and the administrative costs will be small, it is likely that the net gain in reducing the burden on taxpayers as a whole will outweigh the cost of administering the revisions of the user fees.

This rule contains no new information collection or recordkeeping requirements.

Executive Order 12988

This final rule has been reviewed under Executive Order 12988, Civil Justice Reform. This rule: (1) Preempts all State and local laws and regulations that are inconsistent with this rule; (2) has no retroactive effect; and (3) does not require administrative proceedings before parties may file suit in court challenging this rule.

Paperwork Reduction Act

This final rule contains no new information collection or recordkeeping requirements under the Paperwork Reduction Act of 1995 (44 U.S.C. 3501 *et seq.*). The information collection requirements in 9 CFR part 130 have been approved by the Office of Management and Budget under OMB control number 0579–0094.

List of Subjects in 9 CFR Part 130

Animals, Birds, Diagnostic reagents, Exports, Imports, Poultry and poultry products, Quarantine, Reporting and recordkeeping requirements, Tests.

Accordingly, we are amending 9 CFR part 130 as follows:

PART 130—USER FEES

1. The authority citation for part 130 is revised to read as follows:

Authority: 5 U.S.C. 5542; 7 U.S.C. 1622; 19 U.S.C. 1306; 21 U.S.C. 102–105, 111, 114, 114a, 134a, 134c, 134d, 134f, 136, and 136a; 31 U.S.C. 3701, 3716, 3717, 3719, and 3720A; 7 CFR 2.22, 2.80, and 371.4.

2. Section 130.2 is amended as follows:

a. In paragraph (a), by revising the table.

b. In paragraph (b), by revising the table.

§ 130.2 User fees for individual animals and certain birds quarantined in APHIS-owned or operated animal quarantine facilities, including APHIS Animal Import Centers.

(a) * * *

Animal or bird	Daily user fee			
	Oct. 1, 2000–Sept. 30, 2001	Oct. 1, 2001–Sept. 30, 2002	Oct. 1, 2002–Sept. 30, 2003	Beginning Oct. 1, 2003
Birds (excluding ratites and pet birds imported in accordance with Part 93 of this subchapter):				
0–250 grams	$1.50	$1.50	$1.50	$1.75
251–1,000 grams	5.25	5.25	5.50	5.75
Over 1,000 grams	12.00	13.00	13.00	13.00
Domestic or zoo animals (except equines, birds, and poultry):				
Bison, bulls, camels, cattle, or zoo animals	95.00	97.00	100.00	102.00
All others, including, but not limited to, alpacas, llamas, goats, sheep, and swine	25.00	26.00	26.00	27.00
Equines (including zoo equines, but excluding miniature horses):				
1st through 3rd day (fee per day)	251.00	257.00	264.00	270.00
4th through 7th day (fee per day)	182.00	186.00	191.00	195.00
8th and subsequent days (fee per day)	154.00	158.00	162.00	166.00
Miniature horses	57.00	58.00	60.00	61.00
Poultry (including zoo poultry):				
Doves, pigeons, quail	3.25	3.25	3.25	3.50
Chickens, ducks, grouse, guinea fowl, partridge, pea fowl, pheasants	6.00	6.00	6.25	6.25
Large poultry and large waterfowl, including, but not limited to game cocks, geese, swans, and turkeys	14.00	14.00	14.00	15.00
Ratites:				
Chicks (less than 3 months old)	8.75	9.00	9.00	9.25
Juveniles (3 months through 10 months old)	13.00	13.00	14.00	14.00

Animal or bird	Daily user fee			
	Oct. 1, 2000–Sept. 30, 2001	Oct. 1, 2001–Sept. 30, 2002	Oct. 1, 2002–Sept. 30, 2003	Beginning Oct. 1, 2003
Adults (11 months old and older)	25.00	26.00	26.00	27.00

(b) * * *

Bird or poultry (nonstandard housing, care, or handling)	Daily user fee			
	Oct. 1, 2000–Sept. 30, 2001	Oct. 1, 2001–Sept. 30, 2002	Oct. 1, 2002–Sept. 30, 2003	Beginning Oct. 1, 2003
Birds 0–250 grams and doves, pigeons, and quail	$5.25	$5.25	$5.50	$5.75
Birds 251–1,000 grams and poultry such as chickens, ducks, grouse, guinea fowl, partridge, pea fowl, and pheasants	12.00	13.00	13.00	13.00
Birds over 1,000 grams and large poultry and large waterfowl, including, but not limited to game cocks, geese, swans, and turkeys	24.00	24.00	25.00	25.00

* * * * *

3. Section 130.3 is amended as follows:

a. In paragraph (a)(1), by revising the table.

b. By revising paragraph (c)(3).

§ 130.3 User fees for exclusive use of space at APHIS Animal Import Centers.

(a)(1) * * *

Animal import center	Monthly user fee			
	Oct. 1, 2000–Sept. 30, 2001	Oct. 1, 2001–Sept. 30, 2002	Oct. 1, 2002–Sept. 30, 2003	Beginning Oct. 1, 2003
Newburgh, NY:				
Space A . . . 5,396 sq. ft. (503.1 sq. m.)	$54,523	$56,054	$57,630	$59,254
Space B . . . 8,903 sq. ft. (827.1 sq. m.)	89,959	92,484	95,085	97,764
Space C . . . 905 sq. ft. (84.1 sq. m.)	9,144	9,401	9,666	9,938

* * * * *

(c) * * *

(3) If the importer requests additional services, then the user fees for those services will be calculated at the hourly rate user fee listed in § 130.30, for each employee required to perform the service.

* * * * *

4. Section 130.5 is revised to read as follows:

§ 130.5 User fees for services at privately owned permanent and temporary import quarantine facilities.

(a) User fees for each animal quarantined in a privately operated permanent or temporary import quarantine facility will be calculated at the hourly user fee rate listed in § 130.30, for each employee required to perform the service. The person for whom the service is provided and the person requesting the service are jointly and severally liable for payment of these user fees in accordance with §§ 130.50 and 130.51.

(b) [*Reserved*]

(Approved by the Office of Management and Budget under control number 0579–0094)

5. Section 130.6 is revised to read as follows:

§ 130.6 User fees for inspection of live animals at land border ports along the United States-Mexico border.

(a) User fees for live animals presented for importation into or entry into the United States through a land border port along the United States-Mexico border are listed in the following table. The minimum user fee for this service is listed in § 130.30. The person for whom the service is provided and the person requesting the service are jointly and severally liable for payment of these user fees in accordance with §§ 130.50 and 130.51.

Type of live animal	Per head user fee			
	Oct. 1, 2000–Sept. 30, 2001	Oct. 1, 2001–Sept. 30, 2002	Oct. 1, 2002–Sept. 30, 2003	Beginning Oct. 1, 2003
Any ruminants (including breeder ruminants) not covered below	$8.25	$8.50	$8.75	$9.00
Feeder	2.25	2.25	2.50	2.50
Horses, other than slaughter	41.00	42.00	43.00	44.00
In-bond or in-transit	5.25	5.50	5.50	5.75
Slaughter	3.50	3.50	3.75	3.75

(b) [*Reserved*]

(Approved by the Office of Management and Budget under control numbers 0579–0055 and 0579–0094)

6. Section 130.7 is revised to read as follows:

§ 130.7 User fees for import or entry services for live animals at land border ports along the United States-Canada border.

(a) User fees for live animals presented for importation into or entry into the United States through a land border port along the United States-Canada border are listed in the following table. The minimum user fee for this service is listed in § 130.30. The person for whom the service is provided and the person requesting the service are jointly and severally liable for payment of these user fees in accordance with §§ 130.50 and 130.51.

Type of live animal	Unit	User fee			
		Oct. 1, 2000—Sept. 30, 2001	Oct. 1, 2001—Sept. 30, 2002	Oct. 1, 2002—Sept. 30, 2003	Beginning Oct. 1, 2003
Animals being imported into the United States:					
Breeding animals (Grade animals, except horses):					
Sheep and goats	per head	$0.50	$0.50	$0.50	$0.50
Swine	per head	0.75	0.75	0.75	0.75
All others	per head	3.00	3.25	3.25	3.25
Feeder animals:					
Cattle (not including calves)	per head	1.50	1.50	1.50	1.50
Sheep and calves	per head	0.50	0.50	0.50	0.50
Swine	per head	0.25	0.25	0.25	0.25
Horses (including registered horses), other than slaughter and in-transit.	per head	26.00	27.00	28.00	29.00
Poultry (including eggs), imported for any purpose.	per load	46.00	47.00	48.00	50.00
Registered animals (except horses)	per head	5.50	5.50	5.75	6.00
Slaughter animals (except poultry)	per load	23.00	24.00	24.00	25.00
Animals transiting[1] the United States:					
Cattle	per head	1.25	1.50	1.50	1.50
Horses and all other animals	per head	6.25	6.50	6.75	6.75
Sheep and goats	per head	0.25	0.25	0.25	0.25
Swine	per head	0.25	0.25	0.25	0.25

[1] The user fee in this section will be charged for in-transit authorizations at the port where the authorization services are performed. For additional services provided by APHIS, at any port, the hourly user fee rate in § 130.30 will apply.

(b) [*Reserved*]

(Approved by the Office of Management and Budget under control numbers 0579–0055 and 0579–0094)

7. Section 130.8 is revised to read as follows:

§ 130.8 User fees for other services.

(a) User fees for other services that are not specifically addressed elsewhere in part 130 are listed in the following table. The person for whom the service is provided and the person requesting the service are jointly and severally liable for payment of these user fees in accordance with §§ 130.50 and 130.51.

Service	Unit	User fee			
		Oct. 1, 2000–Sept. 30, 2001	Oct. 1, 2001–Sept. 30, 2002	Oct. 1, 2002–Sept. 30, 2003	Beginning Oct. 1, 2003
Germ plasm being exported:[1]					
Embryo:					
Up to 5 donor pairs	per certificate	76.00	79.00	81.00	83.00
Each additional group of donor pairs, up to 5 pairs per group, on the same certificate.	per group of donor pairs	34.00	35.00	36.00	37.00
Semen	per certificate	46.00	48.00	49.00	51.00
Germ plasm being imported:[2]					
Embryo	per load	55.00	57.00	58.00	60.00
Semen	per load	55.00	57.00	58.00	60.00
Import compliance assistance:					
Simple (2 hours or less)	per release	64.00	66.00	68.00	70.00
Complicated (more than 2 hours)	per release	164.00	169.00	174.00	180.00
Processing VS form 16–3, ''Application for Permit to Import Controlled Material/Import or Transport Organisms or Vectors'':					
For permit to import fetal bovine serum when facility inspection is required.	per application	283.00	292.00	300.00	309.00
For all other permits	per application	36.00	37.00	38.00	39.00
Amended application	per amended application.	15.00	15.00	16.00	16.00
Application renewal	per application	19.00	20.00	21.00	21.00
Release from export agricultural hold:					
Simple (2 hours or less)	per release	64.00	66.00	68.00	70.00

Service	Unit	User fee			
		Oct. 1, 2000–Sept. 30, 2001	Oct. 1, 2001–Sept. 30, 2002	Oct. 1, 2002–Sept. 30, 2003	Beginning Oct. 1, 2003
Complicated (more than 2 hours)	per release	164.00	169.00	174.00	180.00

[1] This user fee includes a single inspection and resealing of the container at the APHIS employee's regular tour of duty station or at a limited port. For each subsequent inspection and resealing required, the hourly user fee in § 130.30 will apply.

[2] For inspection of empty containers being imported into the United States, the hourly user fee in § 130.30 will apply, unless a user fee has been assessed under 7 CFR part 354.3.

(b) [*Reserved*]

(Approved by the Office of Management and Budget under control numbers 0579–0015, 0579–0040, 0579–0055 and 0579–0094)

§ 130.9 [Removed and Reserved]

8. Section 130.9 is removed and reserved.

9. Section 130.10 is amended as follows:

a. By revising paragraph (a).

b. By revising the table in paragraph (b).

c. By revising paragraph (d).

§ 130.10 User fees for pet birds.

(a) User fees for pet birds of U.S. origin returning to the United States, except pet birds of U.S. origin returning from Canada, are as follows:

Service	Unit	User fee			
		Oct. 1, 2000—Sept. 30, 2001	Oct. 1, 2001—Sept. 30, 2002	Oct. 1, 2002—Sept. 30, 2003	Beginning Oct. 1, 2003
(1) Which have been out of the United States 60 days or less.	per lot	$99.00	$102.00	$105.00	$108.00
(2) Which have been out of the United States more than 60 days.	per lot	236.00	243.00	250.00	257.00

(b) * * *

Number of birds in isolette	Daily user fee			
	Oct. 1, 2000–Sept. 30, 2001	Oct. 1, 2001–Sept. 30, 2002	Oct. 1, 2002–Sept. 30, 2003	Beginning Oct. 1, 2003
1	$8.50	$8.75	$9.00	$9.25
2	10.00	11.00	11.00	11.00
3	12.00	13.00	13.00	13.00
4	14.00	15.00	15.00	15.00
5 or more	16.00	17.00	17.00	18.00

* * * * *

(d) If the importer requests additional services, then the user fees for those services will be calculated at the hourly rate user fee listed in § 130.30, for each employee required to perform the service.

(Approved by the Office of Management and Budget under control number 0579–0094)

10. Section 130.11 is revised to read as follows:

§ 130.11 User fees for inspecting and approving import/export facilities and establishments.

(a) User fees for the inspection of various import and export facilities and establishments are listed in the following table. The person for whom the service is provided and the person requesting the service are jointly and severally liable for payment of these user fees in accordance with §§ 130.50 and 130.51.

Service	Unit	User fee			
		Oct. 1, 2000–Sept. 30, 2001	Oct. 1, 2001–Sept. 30, 2002	Oct. 1, 2002–Sept. 30, 2003	Beginning Oct. 1, 2003
Embryo collection center inspection and approval (all inspections required during the year for facility approval).	per year	$347.00	$358.00	$369.00	$380.00
Inspection for approval of biosecurity level three laboratories (all inspections related to approving the laboratory for handling one defined set of organisms or vectors).	per inspection	977.00	977.00	977.00	977.00
Inspection for approval of pet food manufacturing, rendering, blending, or digest facilities:					
Initial approval	for all inspections required during the year.	404.75	404.75	404.75	404.75

Service	Unit	User fee			
		Oct. 1, 2000–Sept. 30, 2001	Oct. 1, 2001–Sept. 30, 2002	Oct. 1, 2002–Sept. 30, 2003	Beginning Oct. 1, 2003
Renewal	for all inspections required during the year.	289.00	289.00	289.00	289.00
Inspection for approval of pet food spraying and drying facilities:					
Initial approval	for all inspections required during the year.	275.00	275.00	275.00	275.00
Renewal	for all inspections required during the year.	162.00	162.00	162.00	162.00
Inspection for approval of slaughter establishment:					
Initial approval (all inspections)	per year	342.00	352.00	362.00	373.00
Renewal (all inspections)	per year	296.00	305.00	314.00	323.00
Inspection of approved establishments, warehouses, and facilities under 9 CFR parts 94 through 96:					
Approval (compliance agreement) (all inspections for first year of 3-year approval).	per year	365.00	375.00	386.00	398.00
Renewed approval (all inspections for second and third years of 3-year approval).	per year	211.00	217.00	223.00	230.00

(b) [*Reserved*]

11. Section 130.20 is amended as follows:

a. By revising the section heading.

b. In paragraph (a), by revising the table.

c. In paragraph (b)(1) introductory text, by adding the words ''or vaccinations'' after the word ''tests'' in the second sentence.

d. In paragraph (b)(1), by revising the table.

e. In paragraph (c), by removing the reference to ''§ 130.21'' and adding in its place a reference to ''§ 130.30''.

§ 130.20 User fees for endorsing export certificates.

(a) * * *

Certificate categories	User fee			
	Oct. 1, 2000–Sept. 30, 2001	Oct. 1, 2001–Sept. 30, 2002	Oct. 1, 2002–Sept. 30, 2003	Beginning Oct. 1, 2003
Animal and nonanimal products	$30.00	$30.00	$31.00	$32.00
Hatching eggs	28.00	28.00	29.00	30.00
Poultry, including slaughter poultry	28.00	28.00	29.00	30.00
Slaughter animals (except poultry) moving to Canada or Mexico	32.00	33.00	34.00	35.00
Other endorsements or certifications	22.00	22.00	23.00	24.00

(b)(1) * * *

Number of tests or vaccinations and Number of animals or birds on the certificate	User fee			
	Oct. 1, 2000–Sept. 30, 2001	Oct. 1, 2001–Sept. 30, 2002	Oct. 1, 2002–Sept. 30, 2003	Beginning Oct. 1, 2003
1–2 tests or vaccinations				
Nonslaughter horses to Canada:				
First animal	$35.00	$36.00	$37.00	$38.00
Each additional animal	4.00	4.00	4.25	4.25
Other animals or birds:				
First animal	70.00	72.00	74.00	76.00
Each additional animal	4.00	4.00	4.25	4.25
3–6 tests or vaccinations				
First animal	86.00	88.00	91.00	94.00
Each additional animal	6.75	7.00	7.00	7.25
7 or more tests or vaccinations				
First animal	100.00	103.00	106.00	109.00
Each additional animal	8.00	8.25	8.25	8.50

* * * * *

§ 130.21 [Removed and Reserved]

12. Section 130.21 is removed and reserved.

13. A new § 130.30 is added to read as follows:

§ 130.30 Hourly rate and minimum user fees.

(a) User fees for import- or export-related veterinary services listed in paragraphs (a)(1) through (a)(13) of this

section, except those services covered by flat rate user fees elsewhere in this part, will be calculated at the hourly rate listed in the following table for each employee required to perform the service. The person for whom the service is provided and the person requesting the service are jointly and severally liable for payment of these user fees in accordance with §§ 130.50 and 130.51.

	User fee			
	Oct. 1, 2000–Sept. 30, 2001	Oct. 1, 2001–Sept. 30, 2002	Oct. 1, 2002–Sept. 30, 2003	Beginning Oct. 1, 2003
Hourly rate:				
Per hour	$76.00	$80.00	$84.00	$84.00
Per quarter hour	19.00	20.00	21.00	21.00
Per service minimum fee	23.00	24.00	24.00	25.00

(1) Providing services to live animals for import or entry at airports, ocean ports, and rail ports.

(2) Conducting inspections, including laboratory and facility inspections, required to obtain permits, either to import animal products, aquaculture products, organisms or vectors, or to maintain compliance with import permits.

(3) Obtaining samples required to be tested, either to obtain import permits or to ensure compliance with import permits.

(4) Providing services for imported birds or ratites that are not subject to quarantine.

(5) Supervising the opening of in-bond shipments.

(6) Providing services for in-bond or in-transit animals to exit the United States.

(7) Inspecting an export isolation facility and the animals in it.

(8) Supervising animal or bird rest periods prior to export.

(9) Supervising loading and unloading of animals or birds for export shipment.

(10) Inspecting means of conveyance used to export animals or birds.

(11) Conducting inspections under part 156 of this chapter.

(12) Inspecting and approving an artificial insemination center or a semen collection center or the animals in it.

(13) Providing other import-or export-related veterinary services for which there is no flat rate user fee specified elsewhere in this part.

(b) *When do I pay an additional amount for employee(s) working overtime?* You must pay an additional amount if you need an APHIS employee to work on a Sunday, on a holiday, or at any time outside the normal tour of duty of that employee. Instead of paying the hourly rate user fee, you pay the rate listed in the following table for each employee needed to get the work done.

Overtime rates (outside the employee's normal tour of duty)	Premium rate user fee			
	Oct. 1, 2000–Sept. 30, 2001	Oct. 1, 2001–Sept. 30, 2002	Oct. 1, 2002–Sept. 30, 2003	Beginning Oct. 1, 2003
Premium hourly rate Monday through Saturday and holidays:				
Per hour	$88.00	$92.00	$96.00	$100.00
Per quarter hour	22.00	23.00	24.00	25.00
Premium hourly rate for Sundays:				
Per hour	104.00	104.00	108.00	112.00
Per quarter hour	26.00	26.00	27.00	28.00

(Approved by the Office of Management and Budget under control numbers 0579–0055 and 0579–0094)

14. Section 130.50 is amended as follows:

a. By revising the paragraph (b)(3)(ii).

b. In paragraph (c)(2), by removing the reference to ''§ 130.21'' and adding in its place a reference to ''§ 130.30''.

c. In paragraph (c)(5), by removing the reference to ''§ 130.9'' and adding in its place a reference to ''§ 130.30''.

§ 130.50 Payment of user fees.

* * * * *

(b) * * *

(3) * * *

(ii) *What amount do I pay if I receive an hourly rate user fee service?* Instead of paying the normal hourly rate user fee under § 130.30(a), you pay the premium rate listed in § 130.30(b) for each employee needed to get the work done.

* * * * *

Done in Washington, DC, this 22nd day of August 2000.

Bobby R. Acord,

Acting Administrator, Animal and Plant Health Inspection Service.

[FR Doc. 00–21898 Filed 8–25–00; 8:45 am]

BILLING CODE 3410–34–U

DEPARTMENT OF TRANSPORTATION

Federal Aviation Administration

14 CFR Part 39

[Docket No. 99–SW–66–AD; Amendment 39–11882; AD 2000–17–08]

RIN 2120–AA64

Airworthiness Directives; Eurocopter Deutschland GMBH Model BO–105A, BO–105C, BO–105 C–2, BO–105 CB–2, BO–105 CB–4, BO–105S, BO–105 CS–2, BO–105 CBS–2, BO–105 CBS–4, and BO–105LS A–1 Helicopters

AGENCY: Federal Aviation Administration, DOT.

ACTION: Final rule.

SUMMARY: This amendment supersedes an existing airworthiness directive (AD) that applies to Eurocopter Deutschland

GMBH (ECD) Model BO–105A, BO–105C, BO–105 C–2, BO–105 CB–2, BO–105 CB–4, BO–105S, BO–105 CS–2, BO–105 CBS–2, BO–105 CBS–4, and BO–105LS A–1 helicopters. That AD requires creating a component log card or equivalent record and determining the calendar age and number of flights on each tension-torsion (TT) strap. That AD also requires inspecting and removing, as necessary, certain unairworthy TT straps. This amendment establishes a life limit for certain main rotor TT straps. This amendment is prompted by a need to establish a life limit for certain TT straps because of an accident in which a main rotor blade (blade) separated from an ECD Model MBB–BK 117 helicopter due to fatigue failure of a TT strap. The same part-numbered TT strap is used on the ECD Model BO–105 helicopters. The actions specified by this AD are intended to prevent fatigue failure of the TT strap, loss of a blade, and subsequent loss of control of the helicopter.

EFFECTIVE DATE: October 2, 2000.

FOR FURTHER INFORMATION CONTACT: Charles Harrison, Aviation Safety Engineer, FAA, Rotorcraft Directorate, Rotorcraft Standards Staff, Fort Worth, Texas 76193–0110, telephone (817) 222–5128, fax (817) 222–5961.

SUPPLEMENTARY INFORMATION: A proposal to amend part 39 of the Federal Aviation Regulations (14 CFR part 39) by superseding AD 99–19–22, which applies to ECD Model BO–105A, BO–105C, BO–105 C–2, BO–105 CB–2, BO–105 CB–4, BO–105S, BO–105 CS–2, BO–105 CBS–2, BO–105 CBS–4, and BO–105LS A–1 helicopters, was published in the **Federal Register** on April 24, 2000 (65 FR 21673). That action proposed to require establishing a life limit for the TT straps of 120 months or 40,000 flights, whichever occurs first.

Interested persons have been afforded an opportunity to participate in the making of this amendment. No comments were received on the proposal or the FAA's determination of the cost to the public. The FAA has determined that air safety and the public interest require the adoption of the rule as proposed.

The FAA estimates that 200 helicopters of U.S. registry will be affected by this AD, that it will take approximately 16 work hours per helicopter to accomplish the required actions, and that the average labor rate is $60 per work hour. Required parts will cost approximately $10,400 per helicopter. Based on these figures, the total cost impact of this AD on U.S. operators is estimated to be $2,272,200.

The regulations adopted herein will not have a substantial direct effect on the States, on the relationship between the national Government and the States, or on the distribution of power and responsibilities among the various levels of government. Therefore, it is determined that this final rule does not have federalism implications under Executive Order 13132.

For the reasons discussed above, I certify that this action (1) is not a ''significant regulatory action'' under Executive Order 12866; (2) is not a ''significant rule'' under DOT Regulatory Policies and Procedures (44 FR 11034, February 26, 1979); and (3) will not have a significant economic impact, positive or negative, on a substantial number of small entities under the criteria of the Regulatory Flexibility Act. A final evaluation has been prepared for this action and it is contained in the Rules Docket. A copy of it may be obtained from the Rules Docket at the FAA, Office of the Regional Counsel, Southwest Region, 2601 Meacham Blvd., Room 663, Fort Worth, Texas.

List of Subjects in 14 CFR Part 39

Air transportation, Aircraft, Aviation safety, Safety.

Adoption of the Amendment

Accordingly, pursuant to the authority delegated to me by the Administrator, the Federal Aviation Administration amends part 39 of the Federal Aviation Regulations (14 CFR part 39) as follows:

PART 39—AIRWORTHINESS DIRECTIVES

1. The authority citation for part 39 continues to read as follows:

Authority: 49 U.S.C. 106(g), 40113, 44701.

§ 39.13 [Amended]

2. Section 39.13 is amended by removing Amendment 39–11357 (64 FR 54770, October 8, 1999), and by adding a new airworthiness directive (AD), Amendment 39–11882, to read as follows:

2000–17–08 Eurocopter Deutschland GMBH: Amendment 39–11882. Docket No. 99–SW–66–AD. Supersedes AD 99–19–22, Amendment 39–11357, Docket No. 99–SW–52–AD.

Applicability: Model BO–105A, BO–105C, BO–105 C–2, BO–105 CB–2, BO–105 CB–4, BO–105S, BO–105 CS–2, BO–105 CBS–2, BO–105 CBS–4, and BO–105LS A–1 helicopters, with part number (P/N) 2604067 (Bendix) or J17322–1 (Lord) rotor tension-torsion (TT) strap, installed, certificated in any category.

Note 1: This AD applies to each helicopter identified in the preceding applicability provision, regardless of whether it has been otherwise modified, altered, or repaired in the area subject to the requirements of this AD. For helicopters that have been modified, altered, or repaired so that the performance of the requirements of this AD is affected, the owner/operator must request approval for an alternative method of compliance in accordance with paragraph (d) of this AD. The request should include an assessment of the effect of the modification, alteration, or repair on the unsafe condition addressed by this AD; and, if the unsafe condition has not been eliminated, the request should include specific proposed actions to address it.

Compliance: Required as indicated, unless accomplished previously.

To prevent fatigue failure of a TT strap, loss of a main rotor blade (blade), and subsequent loss of control of the helicopter, accomplish the following:

(a) Before further flight,

(1) Create a component log card or equivalent record for each TT strap.

(2) Review the history of the helicopter and each TT strap. Determine the age since initial installation on any helicopter (age) and the number of flights on each TT strap. Enter both the age and the number of flights for each TT strap on the component log card or equivalent record. When the number of flights is unknown, multiply the number of hours time-in-service (TIS) by 5 to determine the number of flights. If a TT strap has been previously used at any time on Model BO–105LS A–3 ''SUPER LIFTER'', BO–105 CB–5, BO–105 CBS–5, BO–105 DBS–5, or any MBB–BK 117 series helicopter, multiply the number of flights accumulated on those other models by a factor of 1.6 and then add that result to the number of flights accumulated on the helicopters affected by this AD.

(3) Remove any TT strap from service if the total hours TIS or number of flights and age cannot be determined.

(b) On or before January 1, 2001, remove any TT strap that has been in service 120 months since initial installation on any helicopter or accumulated 40,000 flights (a flight is a takeoff and a landing), on any helicopter. Replace the TT strap with an airworthy TT strap.

(c) This AD revises the Airworthiness Limitations Section of the maintenance manual by establishing a life limit for the TT strap, P/N 2604067 and J17322–1, of 120 months or 40,000 flights, whichever occurs first.

(d) An alternative method of compliance or adjustment of the compliance time that provides an acceptable level of safety may be used if approved by the Manager, Regulations Group, Rotorcraft Directorate, FAA. Operators shall submit their requests through an FAA Principal Maintenance Inspector, who may concur or comment and then send it to the Manager, Regulations Group.

Note 2: Information concerning the existence of approved alternative methods of compliance with this AD, if any, may be obtained from the Regulations Group.

(e) Special flight permits may be issued in accordance with sections 21.197 and 21.199 of the Federal Aviation Regulations (14 CFR

21.197 and 21.199) to operate the helicopter to a location where the requirements of this AD can be accomplished.

(f) This amendment becomes effective on October 2, 2000.

Note 3: The subject of this AD is addressed in the Luftfahrt Bundesamt (Federal Republic of Germany) AD 1999–300/3, dated August 31, 1999.

Issued in Fort Worth, Texas, on August 21, 2000.

Eric Bries,

Acting Manager, Rotorcraft Directorate, Aircraft Certification Service.

[FR Doc. 00–21871 Filed 8–25–00; 8:45 am]

BILLING CODE 4910–13–P

DEPARTMENT OF TRANSPORTATION

Federal Aviation Administration

14 CFR Part 39

[Docket No. 2000–SW–33–AD; Amendment 39–11881; AD 2000–17–07]

RIN 2120–AA64

Airworthiness Directives; Eurocopter France Model EC120B Helicopters

AGENCY: Federal Aviation Administration, DOT.

ACTION: Final rule; request for comments.

SUMMARY: This amendment adopts a new airworthiness directive (AD) for Eurocopter France Model EC120B helicopters. This action requires adjusting the clearance of the cabin sliding door if necessary. This amendment is prompted by an in-flight loss of a cabin sliding door, which had been locked in the fully opened position. The actions specified in this AD are intended to prevent in-flight loss of a cabin sliding door, impact with the horizontal stabilizer, main rotor, or fenestron tail rotor, and subsequent loss of control of the helicopter.

DATES: Effective September 12, 2000.

Comments for inclusion in the Rules Docket must be received on or before October 27, 2000.

ADDRESSES: Submit comments in triplicate to the Federal Aviation Administration (FAA), Office of the Regional Counsel, Southwest Region, Attention: Rules Docket No. 2000–SW–33–AD, 2601 Meacham Blvd., Room 663, Fort Worth, Texas 76137. You may also send comments electronically to the Rules Docket at the following address: 9-asw-adcomments@faa.gov. Comments may be inspected at the Office of the Regional Counsel between 9 a.m. and 3 p.m., Monday through Friday, except Federal holidays.

FOR FURTHER INFORMATION CONTACT: Richard Monschke, Aviation Safety Engineer, FAA, Rotorcraft Directorate, Rotorcraft Standards Staff, Fort Worth, Texas 76193–0110, telephone (817) 222–5116, fax (817) 222–5961.

SUPPLEMENTARY INFORMATION: The Direction Generale De L'Aviation Civile (DGAC), the airworthiness authority for France, notified the FAA that an unsafe condition may exist on Eurocopter France Model EC120B helicopters. The DGAC advises that the cabin sliding door must be adjusted, if necessary, to prevent in-flight loss of the cabin sliding door.

Eurocopter France has issued Service Telex No. 05–005, dated June 30, 2000, which specifies adjusting any cabin sliding door if a roller is not completely inside its rail with a minimum clearance of 3 mm. Eurocopter France received a report of an in-flight loss of the cabin sliding door. An investigation shows that the loss of the door was due to the forward upper roller being out of its guide rail. The door edge thus exposed to the slipstream caused the forward lower roller train to be driven out of the guide rail due to the aerodynamic loads. The door aft hinges failed, and the door departed from the aircraft. The DGAC classified this service telex as mandatory and issued AD T2000–285–005(A), dated June 30, 2000, to ensure the continued airworthiness of these helicopters in France.

This helicopter model is manufactured in France and is type certificated for operation in the United States under the provisions of 14 CFR 21.29 and the applicable bilateral airworthiness agreement. Pursuant to this bilateral airworthiness agreement, the DGAC has kept the FAA informed of the situation described above. The FAA has examined the findings of the DGAC, reviewed all available information, and determined that AD action is necessary for products of this type design that are certificated for operation in the United States.

We have identified an unsafe condition that is likely to exist or develop on other Eurocopter France Model EC120B helicopters of the same type design registered in the United States. This AD is being issued to prevent in-flight loss of a cabin sliding door, impact with the horizontal stabilizer, main rotor, or fenestron tail rotor, and subsequent loss of control of the helicopter. This AD requires adjusting the clearance of any cabin sliding door to a minimum of 3 mm from the aft end of the rail. The short compliance time involved is required because the previously described critical unsafe condition can adversely affect the structural integrity and controllability of the helicopter. Therefore, adjusting the clearance of the cabin sliding door to a minimum of 3 mm from the aft end of the rail is required before further flight with the door in the open position and this AD must be issued immediately.

Since a situation exists that requires the immediate adoption of this regulation, it is found that notice and opportunity for prior public comment hereon are impracticable, and that good cause exists for making this amendment effective in less than 30 days.

The FAA estimates that 24 helicopters will be affected by this AD, that it will take approximately 0.25 work hours to adjust the cabin sliding door, and that the average labor rate is $60 per work hour. Based on these figures, the total cost impact of the AD on U.S. operators is estimated to be $360.

Comments Invited

Although this action is in the form of a final rule that involves requirements affecting flight safety and, thus, was not preceded by notice and an opportunity for public comment, comments are invited on this rule. Interested persons are invited to comment on this rule by submitting such written data, views, or arguments as they may desire. Communications should identify the Rules Docket number and be submitted in triplicate to the address specified under the caption **ADDRESSES**. All communications received on or before the closing date for comments will be considered, and this rule may be amended in light of the comments received. Factual information that supports the commenter's ideas and suggestions is extremely helpful in evaluating the effectiveness of the AD action and determining whether additional rulemaking action would be needed.

Comments are specifically invited on the overall regulatory, economic, environmental, and energy aspects of the rule that might suggest a need to modify the rule. All comments submitted will be available, both before and after the closing date for comments, in the Rules Docket for examination by interested persons. A report that summarizes each FAA-public contact concerned with the substance of this AD will be filed in the Rules Docket.

Commenters wishing the FAA to acknowledge receipt of their mailed comments submitted in response to this rule must submit a self-addressed, stamped postcard on which the following statement is made: ''Comments to Docket No. 2000–SW–

33–AD.'' The postcard will be date stamped and returned to the commenter.

The regulations adopted herein will not have a substantial direct effect on the States, on the relationship between the national Government and the States, or on the distribution of power and responsibilities among the various levels of government. Therefore, it is determined that this final rule does not have federalism implications under Executive Order 13132.

The FAA has determined that this regulation is an emergency regulation that must be issued immediately to correct an unsafe condition in aircraft, and that it is not a ''significant regulatory action'' under Executive Order 12866. It has been determined further that this action involves an emergency regulation under DOT Regulatory Policies and Procedures (44 FR 11034, February 26, 1979). If it is determined that this emergency regulation otherwise would be significant under DOT Regulatory Policies and Procedures, a final regulatory evaluation will be prepared and placed in the Rules Docket. A copy of it, if filed, may be obtained from the Rules Docket at the location provided under the caption **ADDRESSES.**

List of Subjects in 14 CFR Part 39

Air transportation, Aircraft, Aviation safety, Safety.

Adoption of the Amendment

Accordingly, pursuant to the authority delegated to me by the Administrator, the Federal Aviation Administration amends part 39 of the Federal Aviation Regulations (14 CFR part 39) as follows:

PART 39—AIRWORTHINESS DIRECTIVES

1. The authority citation for part 39 continues to read as follows:

Authority: 49 U.S.C. 106(g), 40113, 44701.

§ 39.13 [Amended]

2. Section 39.13 is amended by adding a new airworthiness directive to read as follows:

2000–17–07 Eurocopter France: Amendment 39–11881. Docket No. 2000–SW–33–AD.

Applicability: Model EC120B helicopters, certificated in any category.

Note 1: This AD applies to each helicopter identified in the preceding applicability provision, regardless of whether it has been otherwise modified, altered, or repaired in the area subject to the requirements of this AD. For helicopters that have been modified, altered, or repaired so that the performance of the requirements of this AD is affected, the owner/operator must request approval for an alternative method of compliance in accordance with paragraph (b) of this AD. The request should include an assessment of the effect of the modification, alteration, or repair on the unsafe condition addressed by this AD; and if the unsafe condition has not been eliminated, the request should include specific proposed actions to address it.

Compliance: Required before further flight with the cabin sliding door in the open position or within 60 days, whichever occurs first, unless accomplished previously, and prior to further flight after installing a cabin sliding door.

To prevent in-flight loss of a cabin sliding door, impact with the horizontal stabilizer, main rotor, or fenestron tail rotor, and subsequent loss of control of the helicopter, accomplish the following:

(a) Adjust the cabin sliding door (23) (see Figure 1) in accordance with the following:

BILLING CODE 4910–13–P

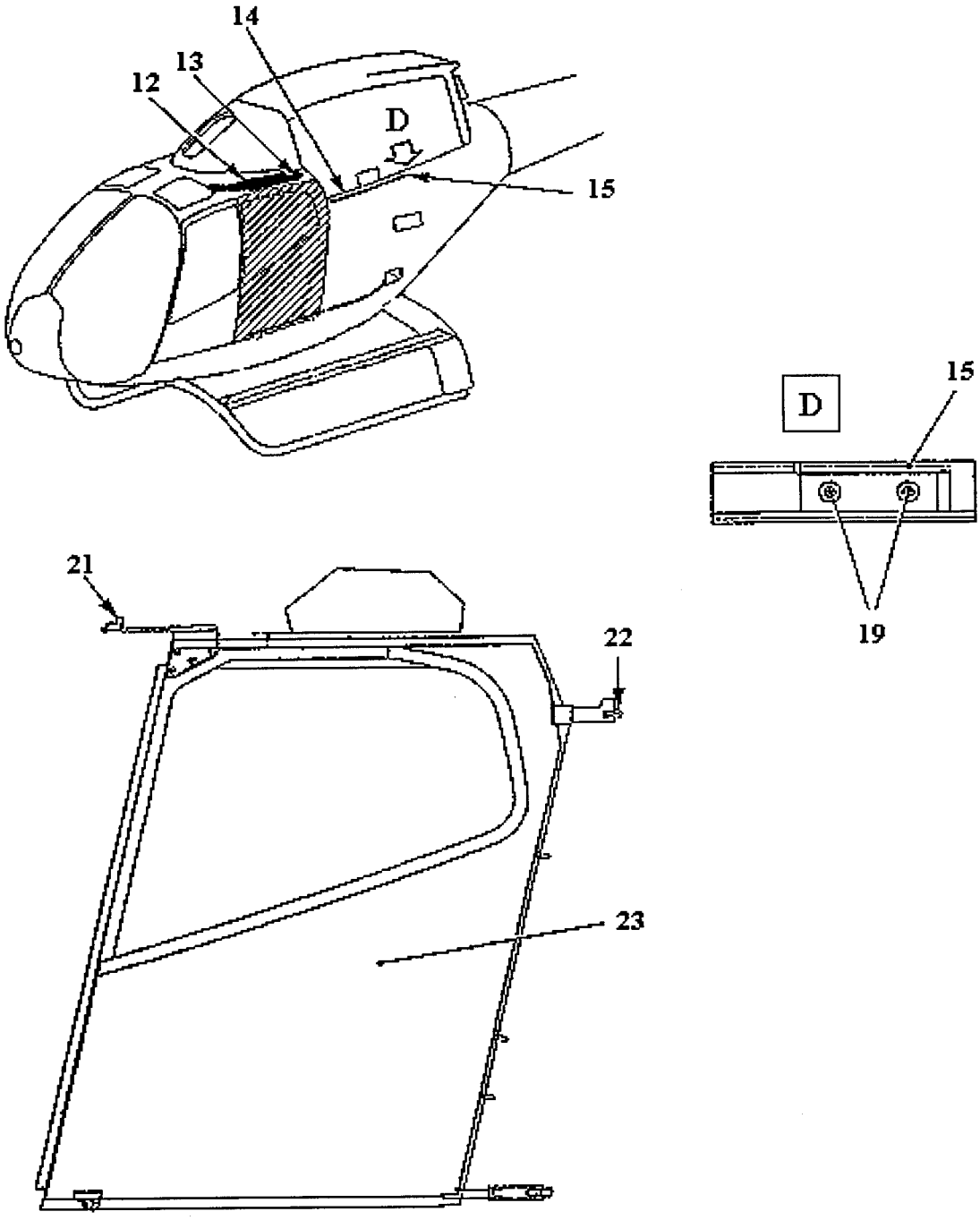

Figure 1

BILLING CODE 4910–13–C

(1) Loosen the screws (19) and the stop (15).

(2) Open and push the cabin sliding door aft until the roller goes past the locking pin (13) while keeping the roller (21) inside the rail (12).

(3) Move the cabin sliding door forward to bring the roller (21) into contact with the locking pin (13).

(4) Move the stop (15) as far forward as possible toward the nose of the aircraft.

(5) Mark the location of the stop (15) with respect to the rail (14).

(6) Unlock the cabin sliding door and move it forward to gain access to the screws (19).

(7) Hold the stop (15) aligned with the rail (14), and secure the stop (15) and the screws (19) at the location previously marked.

(8) Ensure that the pin (13) locking mechanism (pin) locks the cabin sliding door in the open position. If the pin does not lock the door in the open position, before further flight, repair or replace the pin with an airworthy pin.

(9) Bring the roller (22) into contact with the stop (15) of the rail (14).

(10) If the roller (21) is completely inside the rail (12) with a minimum clearance of 3 mm from the aft end of the rail (12), the cabin door is properly adjusted and no further action is required by this AD.

(11) If the roller (21) is less than 3 mm from the aft end of the rail (12), before further flight, repeat steps (1) through (10) until a minimum clearance of 3 mm is obtained.

(b) An alternative method of compliance or adjustment of the compliance time that provides an acceptable level of safety may be used if approved by the Manager, Regulations Group, Rotorcraft Directorate, FAA. Operators shall submit their requests through an FAA Principal Maintenance Inspector, who may concur or comment and then send it to the Manager, Regulations Group.

Note 2: Information concerning the existence of approved alternative methods of compliance with this AD, if any, may be obtained from the Regulations Group.

(c) Special flight permits may be issued in accordance with 14 CFR 21.197 and 21.199 to operate the helicopter with the sliding cabin door closed or removed to a location where the requirements of this AD can be accomplished.

(d) This amendment becomes effective on September 12, 2000.

Note 3: The subject of this AD is addressed in Direction Generale De L'Aviation Civile (France) AD T2000–285–005(A), dated June 30, 2000.

Issued in Fort Worth, Texas, on August 21, 2000.

Eric Bries,

Acting Manager, Rotorcraft Directorate, Aircraft Certification Service.

[FR Doc. 00–21870 Filed 8–25–00; 8:45 am]

BILLING CODE 4910–13–P

DEPARTMENT OF TRANSPORTATION

Federal Aviation Administration

14 CFR Part 71

[Airspace Docket No. 00–AGL–17]

Modification of Class E Airspace; Dickinson, ND

AGENCY: Federal Aviation Administration (FAA), DOT.

ACTION: Final rule.

SUMMARY: This action modifies Class E airspace at Dickinson, ND. An examination of the Class E airspace for Dickinson, ND, has revealed a discrepancy in the airport reference point used for the controlled airspace legal descriptions. This action corrects that discrepancy by incorporating the current airport reference point in the Class E airspace for Dickinson Municipal Airport.

EFFECTIVE DATE: 0901 UTC, November 30, 2000.

FOR FURTHER INFORMATION CONTACT: Denis C. Burke, Air Traffic Division, Airspace Branch, AGL–520, Federal Aviation Administration, 2300 East Devon Avenue, Des Plaines, Illinois 60018, telephone (847) 294-7568.

SUPPLEMENTARY INFORMATION:

History

On Friday, June 16, 2000, the FAA proposed to amend 14 CFR part 71 to modify Class E airspace at Dickinson, ND (65 FR 37725). The proposal was to modify controlled airspace extending upward from the surface to contain Instrument Flight Rules (IFR) operations in controlled airspace during portions of the terminal operation and while transiting between the enroute and terminal environments.

Interested parties were invited to participate in this rulemaking proceeding by submitting written comments on the proposal to the FAA. No comments objecting to the proposal were received. Class E airspace areas designated as surface areas are published in paragraph 6002, and Class E airspace areas extending upward from 700 feet or more above the surface are published in paragraph 6005, of FAA Order 7400.9G dated September 1, 1999, and effective September 16, 1999, which is incorporated by reference in 14 CFR 71.1. The Class E airspace designations listed in this document will be published subsequently in the Order.

The Rule

This amendment to 14 CFR part 71 modifies Class E airspace at Dickinson, ND, to accommodate aircraft executing instrument flight procedures into and out Dickinson Municipal Airport. The area will be depicted on appropriate aeronautical charts.

The FAA has determined that this regulation only involves an established body of technical regulations for which frequent and routine amendments are necessary to keep them operationally current. Therefore, this regulation—(1) is not a ''significant regulatory action'' under Executive Order 12866; (2) is not a ''significant rule'' under DOT Regulatory Policies and Procedures (44 FR 11034; February 26, 1979); and (3) does not warrant preparation of a Regulatory Evaluation as the anticipated impact is so minimal. Since this is a routine matter that will only affect air traffic procedures and air navigation, it is certified that this rule will not have a significant economic impact on a substantial number of small entities under the criteria of the Regulatory Flexibility Act.

List of Subjects in 14 CFR Part 71

Airspace, Incorporation by reference, Navigation (air).

Adoption of the Amendment

In consideration of the foregoing, the Federal Aviation Administration amends 14 CFR part 71 as follows:

PART 71—DESIGNATION OF CLASS A, CLASS B, CLASS C, CLASS D, AND CLASS E AIRSPACE AREAS; AIRWAYS; ROUTES; AND REPORTING POINTS

1. The authority citation for part 71 continues to read as follows:

Authority: 49 U.S.C. 106(g), 40103, 40113, 40120; E.O. 10854, 24 FR 95665, 3 CFR, 1959–1963 Comp., p. 389.

§ 71.1 [Amended]

2. The incorporation by reference in 14 CFR 71.1 of the Federal Aviation Administration Order 7400.9G, Airspace Designations and Reporting Points, dated September 1, 1999, and effective September 16, 1999, is amended as follows:

* * * * *

Paragraph 6002 Class E airspace designated as a surface area.

* * * * *

AGL ND E2 Dickinson, ND [Revised]

Dickinson Municipal Airport, ND
(Lat 46°47′51″ N., long 102°48′ 07″ W.)
Within an 4.4-mile radius of the Dickinson Municipal Airport, and within 1.4 miles each side of the 150° bearing from the airport,

extending from the 4.4-mile radius to 7.0 miles southeast of the airport.

* * * * *

Paragraph 6005 Class E airspace areas extending upward from 700 feet or more above the surface of the earth.

* * * * *

AGL ND E5 Dickinson, ND [Reviseds]

Dickinson Municipal Airport, ND
(Lat 46°47′51″ N., long 102°48′07″ W.)
Dickinson VORTAC
(Lat 46°51′36″ N., long 102°46′25″ W.)

That airspace extending upward from 700 feet above the surface within an 8.3-mile radius of the Dickinson Municipal Airport, and within 4.0 mileseach side of the 150° bearing from the airport, extending from the 8.3-mile radius to 14.0 miles southeast of the airport, and that airspace extending upward from 1,200 feet above the surface within a 225.2-mile radius of the Dickinson VORTAC extending clockwise from the Dickinson VORTAC 214° radial to the Dickinson VORTAC 093° radial.

* * * * *

Issued in Des Plaines, Illinois on August 7, 2000.

Christopher R. Blum,

Manager, Air Traffic Division, Great Lakes Region.

[FR Doc. 00–21815 Filed 8–25–00; 8:45 am]

BILLING CODE 4910–13–M

DEPARTMENT OF HEALTH AND HUMAN SERVICES

Food and Drug Administration

21 CFR Part 640

[Docket No. 98N–0608]

Revision of Requirements Applicable to Albumin (Human), Plasma Protein Fraction (Human), and Immune Globulin (Human)

AGENCY: Food and Drug Administration, HHS.

ACTION: Final rule.

SUMMARY: The Food and Drug Administration (FDA) is amending the biologics regulations by removing, revising, or updating specific regulations applicable to blood derivative products to be more consistent with current practices and to remove unnecessary or outdated requirements. FDA is taking this action as part of the agency's ''Blood Initiative'' in which FDA is reviewing and revising, when appropriate, its regulations, policies, guidance, and procedures related to blood products, including blood derivatives.

DATES: This rule is effective September 27, 2000.

FOR FURTHER INFORMATION CONTACT: Nathaniel L. Geary, Center for Biologics Evaluation and Research (HFM–17), Food and Drug Administration, 1401 Rockville Pike, suite 200N, Rockville, MD 20852–1448, 301–827–6210.

SUPPLEMENTARY INFORMATION:

I. Background

In the **Federal Register** of May 14, 1999 (64 FR 26282), FDA published a direct final rule to amend the biologics regulations in part 640 (21 CFR part 640) by removing, revising, or updating specific regulations applicable to blood derivative products to be more consistent with current practices and to remove unnecessary or outdated requirements. FDA issued these amendments directly as a final rule because the agency believed they were noncontroversial and that there was little likelihood that there would be comments opposing the rule. In the **Federal Register** of May 14, 1999 (64 FR 26344), FDA published a companion proposed rule under FDA's usual procedures for notice and comment in the event the agency received any significant adverse comments to the direct final rule. FDA received three significant adverse comments during the comment period, and the agency has considered these comments in developing the final rule.

In the **Federal Register** of March 14, 2000 (65 FR 13678), FDA published a direct final rule with a confirmation in part and technical amendment. The document confirmed those provisions for which there were no adverse comments. This final rulemaking responds to those proposed provisions for which there were significant adverse comments.

II. Responses to Comments on the Proposed Rule

A. Proposed § 640.81(e)

The proposed changes to § 640.81(e) were: (1) The insertion of the word ''continuously,'' to clarify that the heating process shall be continuous for the time and at the temperature specified in the regulations and (2) the removal of an extraneous degree sign.

One comment did not object to the proposed changes to § 640.81(e), but it recommended deletion of the sentence that currently precedes the sentence for which the changes are proposed. That sentence reads: ''Heating of the final containers of Albumin (Human) shall begin within 24 hours after completion of filling.'' The comment also stated that the proposed rule should be broadened to allow for heat treatment to occur in bulk during the manufacturing process.

FDA disagrees with the comment. Even though the comment did not address the proposed rule, but rather the regulation as it currently exists, the agency has considered the comment and the arguments listed in support of the recommended deletion and/or broadening. The comment listed several potential advantages of heating in bulk over heating in the final containers. These included better control and monitoring, obviation of the need for a water bath and the attendant potential microbial contamination of the product, and diminished leaching of contaminants from the containers. The comment noted that heating in bulk would allow the product to be filled in a post-viral-inactivation filling suite.

Despite these theoretical advantages, the agency does not find that they provide sufficient assurance of safety equal to or greater than that provided by the current process to warrant deleting this portion of the regulation. Furthermore, the agency is not aware that any of the disadvantages of the current process implied by the comment cannot be overcome by appropriate process validation and adherence to current good manufacturing practice.

Nothing in the current regulation or the proposed rule precludes heat treatment in bulk during the manufacturing process for Albumin (Human), provided that it is conducted according to current good manufacturing practice and described in an approved Biologics License Application (BLA). An applicant who wishes to include such a step in the manufacture of Albumin (Human) should describe it in a BLA or Biologics License Supplement that addresses such matters as validation of the process and demonstration that the treatment does not affect adversely the characteristics of the product, including its purity, safety, and stability.

However, the agency has concluded that heat treatment in bulk, even for 10 to 11 hours at 60±0.5 °C, does not permit the manufacturer to forgo heating Albumin (Human) in the final containers, as prescribed in § 640.81(e). This requirement is intended to minimize the occurrence of viral transmission by albumin-containing products (Ref. 1).

B. Proposed § 640.81(f)

The proposed changes to § 640.81(f) would clarify the acceptable amounts of stabilizers that must be present in Albumin (Human) and Plasma Protein Fraction (Human) to reflect the amounts of those stabilizers that are currently used in these products.

One comment objected to the proposed quantity of sodium caprylate per gram (/g) of protein and

recommended that the range be increased to allow higher quantities of caprylate/g of protein or, alternatively, that the quantity of sodium caprylate not be specified in the regulation.

The rationale for this recommendation included: (1) Caprylate is a more effective stabilizer than is acetyltryptophanate, which is currently used as a stabilizer in conjunction with caprylate; (2) the denaturation temperature of albumin is increased as the quantity of caprylate/g of protein is increased; and (3) the additional quantity of caprylate infused will not be expected to have any adverse effect.

FDA does not agree with the comment. The agency agrees that caprylate is a more effective stabilizer of albumin than is acetyltryptophanate. The observation that 0.08 millimole sodium caprylate/g of protein stabilizes albumin nearly as effectively as 0.08 millimole sodium acetyltryptophanate plus 0.08 millimole sodium caprylate/g of protein (Refs. 2 and 3) was one of the reasons underlying the proposed rule. The agency also agrees that increasing the quantity of caprylate/g of protein increases the denaturation temperature of albumin. For the heat treatment required by § 640.81 during the processing of albumin, however, the important factor is the effectiveness of stabilization at 60 °C. Once the quantity of stabilizer is sufficient to assure that the temperature at which denaturation is initiated is significantly above 60 °C, further increase in the quantity of stabilizer would not be expected to enhance the stability of albumin at this temperature (Ref. 3). This expectation has been confirmed in practice. When albumin was heated for 10 hours at 60 °C, increasing the ratio of caprylate to protein resulted in progressively better stabilization up to a ratio of 0.08 millimole sodium caprylate/g of protein; above that, little or no further stabilization occurred (Ref. 3). Furthermore, when sodium caprylate was present at a ratio of 0.08 millimole/g of protein, albumin remained as stable during continued heating (up to 24 hours) at 60 °C as it was after 10 hours at this temperature (Ref. 3).

Numerous biological effects of caprylate have been reported. Even a nonexhaustive listing reveals a broad array, including: (1) Hypoglycemia (Refs. 4 to 6); (2) hyperventilation (Refs. 7 and 8); (3) narcotic action in various animal species (Refs. 6, 9, and 10); (4) increased oxygen consumption and decreased clearance of long-chain fatty acids by the liver (Refs. 11 and 12); (5) vasodilation (Ref. 13); (6) decreased muscle contractility (Refs. 14 to 6); (7) altered epithelial and membrane permeability (Refs. 17 and 18), including alteration of the blood-brain barrier (Refs. 19 and 20); (8) inhibition of platelet reactivity (Refs. 21 and 22); (9) increased release of insulin and enzymes from pancreatic cells (Refs. 23 to 26); (10) altered carbohydrate metabolism (Refs. 5, 15, and 27 to 30), including glucose production (Refs. 4, and 31 to 33); (11) increased catabolism of muscle proteins (Ref. 34), decreased incorporation of amino acids into protein (Ref. 35), and alterations in amino acid metabolism (Refs. 36 and 37); (12) decreased ammonia production and metabolism (Refs. 31 and 38); and (13) depressed synthesis of DNA (Deoxyribonucleic acid) and RNA (ribonucleic acid) (Refs. 39 to 41).

In view of this broad range of demonstrated effects, it is difficult to predict the outcome of increased caprylate infusion in different patients and different clinical settings. For this reason, the agency believes that the ratio of caprylate to protein should not be increased above that necessary to stabilize albumin.

Many factors contribute to the stability of albumin during heating. These include not only the stabilizers noted here but also the pH (Ref. 42) and the chloride content of the solution (Ref. 3). Moreover, the contributions of these factors to the stability of albumin appear to be additive (Ref. 3). Therefore, conditions can be chosen to maximize the stability of albumin without increasing the quantity of caprylate above that specified in the proposed rule.

C. Proposed § 640.102(e)

The proposed change to § 640.102(e) would delete ''30 to'' in § 640.102(e).

One comment on proposed § 640.102(e) raised no objection, but it objected to the wording of other parts of the paragraph. The comment recommended that the first sentence be amended with definitions to provide increased clarity. It stated that the second sentence, as worded in both the current regulation and the proposed rule, seems not to allow for heating of the product at elevated temperature for the purpose of viral inactivation; and it recommended that it be amended to incorporate this possibility.

The agency agrees that the parts of the regulation noted in the comment, as well as others that were not included, could be clarified and improved. The agency believes that making such changes should be done as part of an overall revision of the regulation and is beyond the scope of this rulemaking. With regard to the comment about the second sentence, if an applicant believes that heating at elevated temperature would improve the safety of Immune Globulin (Human) without compromising its other characteristics, such as purity and stability, the applicant should describe the process in a BLA or Biologics License Supplement and submit it to the agency as a request for an alternative procedure under § 640.120.

FDA has considered all comments in response to the proposed rule and has determined that proposed § 640.81(e) and (f) and § 640.102(e) should be issued as a final rule.

III. Analysis of Impacts

A. Review under Executive Order 12866 and the Regulatory Flexibility Act and Unfunded Mandates Reform Act of 1995

FDA has examined the impacts of the final rule under Executive Order 12866 the Regulatory Flexibility Act (5 U.S.C. 601–612 (as amended by subtitle D of the Small Business Regulatory Fairness Act of 1996 (Public Law 104–121)), and the Unfunded Mandates Reform Act of 1995 (Public Law 104–4). Executive Order 12866 directs agencies to assess all costs and benefits of available regulatory alternatives and, when regulation is necessary, to select regulatory approaches that maximize net benefits (including potential economic, environmental, public health and safety, and other advantages; distributive impacts; and equity). The agency believes that this final rule is consistent with the regulatory philosophy and principles identified in the Executive Order. In addition, the final rule is not a significant regulatory action as defined by the Executive Order and therefore is not subject to review under the Executive Order.

The Regulatory Flexibility Act requires agencies to analyze regulatory options that would minimize any significant impact of a rule on small business entities. Because the final rule amendments have no compliance costs and do not result in any new requirements, the agency certifies that the final rule will not have a significant negative economic impact on a substantial number of small entities. Therefore, under the Regulatory Flexibility Act, no further analysis is required.

The Unfunded Mandates Reform Act (2 U.S.C. 1501 *et seq.*) requires that agencies prepare an assessment of anticipated costs and benefits before proposing any rule that may result in expenditures by State, local, and tribal governments, in the aggregate, or by the private sector, of $100 million or more in any one year. Because this rule does

not result in expenditures by State, local, and tribal governments, in the aggregate, or by the private sector, of $100 million or more in any one year, FDA concluded that the proposed regulation is consistent with the principles of the Unfunded Mandates Reform Act without the need for further analysis.

B. Environmental Impact

The agency has determined under 21 CFR 25.31(h) that this action is of a type that does not individually or cumulatively have a significant effect on the human environment. Therefore, neither an environmental assessment nor an environmental impact statement is required.

IV. The Paperwork Reduction Act of 1995

This final rule contains no collections of information. Therefore, clearance by the Office of Management and Budget under the Paperwork Reduction Act of 1995 is not required.

V. References

The following references have been placed on display in the Dockets Management Branch (address above) and may be seen by interested persons between 9 a.m. and 4 p.m., Monday through Friday.

1. *American Journal of Epidemiology*, 103:399–407, 1976.
2. *Vox Sanguinis*, 47:7–18, 1984.
3. *Vox Sanguinis*, 47:28–40, 1984.
4. *Metabolism*, 14:1311–1323, 1965.
5. *Canadian Journal of Physiology and Pharmacology*, 45:29–38, 1967.
6. *Journal of Laboratory and Clinical Medicine*, 101:930–939, 1983.
7. *Neurology*, 28:940–944, 1978.
8. *Research in Experimental Medicine*, 189:347–354, 1989.
9. *Journal of Pharmacology and Experimental Therapeutics*, 191:10–16, 1974.
10. *American Journal of Gastroenterology*, 69:187–190, 1978.
11. *European Journal of Biochemistry*, 141:223–230, 1984.
12. *Proceedings of the Society for Experimental Biology and Medicine*, 167:36–39, 1981.
13. *American Journal of Physiology*, 261:H561–H567, 1991.
14. *Biomedica Biochimica Acta*, 45:S45–S50, 1986.
15. *Biochimica et Biophysica Acta* 1093:125–134, 1991.
16. *Folia Medica*, 34:12–18, 1992.
17. *Pharmaceutical Research*, 8:1365–1371, 1991.
18. *Journal of Pharmaceutical Sciences*, 77:390–392, 1988.
19. *Pediatric Neurology*, 1:20–22, 1985.
20. *Pediatric Neurology*, 1:223–225, 1985.
21. *Thrombosis Research*, 4:479–484, 1974.
22. *Scandinavian Journal of Clinical and Laboratory Investigation*, 35:19–23, 1975.
23. *Metabolism*, 16:482–484, 1967.
24. *American Journal of Physiology*, 234:E162–E167, 1978.
25. *Journal of Physiology*, 356:479–489, 1984.
26. *Journal of Comparative Physiology*, B 166:305–309, 1996.
27. *American Journal of Physiology*, 217:715–719, 1969.
28. *Journal of Reproduction and Fertility*, 23:307–317, 1970.
29. *European Journal of Biochemistry*, 86:519–530, 1978.
30. *Archives of Biochemistry and Biophysics*, 309:254–260, 1994.
31. *American Journal of Physiology*, 231:880–887, 1976.
32. *Biochimica et Biophysica Acta*, 757:111–118, 1983.
33. *Comparative Biochemistry and Physiology*, B 91:339–344, 1988.
34. *Folia Medica*, 35:23–27, 1993.
35. *Experientia*, 34:232–233, 1978.
36. *European Journal of Biochemistry*, 97:389–394, 1979.
37. *Journal of Biological Chemistry*, 267:11208–11214, 1992.
38. *Journal of Pharmacology and Experimental Therapeutics*, 197:675–680, 1976.
39. *Hepatology*, 5:28–31, 1985.
40. *Journal of Biological Chemistry*, 267:14918–14927, 1992.
41. *Journal of Lipid Research*, 38:2548–2557, 1997.
42. *Vox Sanguinis*, 47:19–27, 1984.

List of Subjects in 21 CFR Part 640

Blood, Labeling, Reporting and recordkeeping requirements.

Therefore, under the Federal Food, Drug, and Cosmetic Act, the Public Health Service Act, and under authority delegated to the Commissioner of Food and Drugs, 21 CFR part 640 is amended as follows:

PART 640—ADDITIONAL STANDARDS FOR HUMAN BLOOD AND BLOOD PRODUCTS

1. The authority citation for 21 CFR part 640 continues to read as follows:

Authority: 21 U.S.C. 321, 351, 352, 353, 355, 360, 371; 42 U.S.C. 216, 262, 263, 263a, 264.

2. Section 640.81 is amended by revising the last sentence in paragraph (e) and by revising paragraph (f) to read as follows:

§ 640.81 Processing.

* * * * *

(e) *Heat treatment.* * * * Heat treatment shall be conducted so that the solution is heated continuously for not less than 10, or more than 11 hours, at an attained temperature of 60±0.5 °C.

(f) *Stabilizer.* Either 0.08±0.016 millimole sodium caprylate, or 0.08±0.016 millimole sodium acetyltryptophanate and 0.08±0.016 millimole sodium caprylate per gram of protein shall be present as a stabilizer(s). Calculations of the stabilizer concentration may employ the labeled value for the protein concentration of the product as referred to in § 640.84(d).

* * * * *

3. Section 640.102 is amended by revising the last sentence of paragraph (e) to read as follows:

§ 640.102 Manufacture of Immune Globulin (Human).

* * * * *

(e) * * * At no time during processing shall the product be exposed to temperatures above 45 °C, and after sterilization the product shall not be exposed to temperatures above 32 °C for more than 72 hours.

Dated: August 4, 2000.

Margaret M. Dotzel,

Associate Commissioner for Policy.

[FR Doc. 00–21897 Filed 8–25–00; 8:45 am]

BILLING CODE 4160–01–F

DEPARTMENT OF THE TREASURY

Bureau of Alcohol, Tobacco and Firearms

27 CFR Parts 6, 8, 10 and 11

[T.D. ATF–428]

RIN 1512–AC01

Delegation of Authority (99R–282P)

AGENCY: Bureau of Alcohol, Tobacco and Firearms (ATF), Treasury.

ACTION: Treasury Decision; Final rule.

SUMMARY: This final rule places most ATF authorities contained in certain ATF regulations with the ''appropriate ATF officer'' and requires that persons file documents required by those regulations with the ''appropriate ATF officer''. Also, this final rule removes the definitions of, and references to, specific officers subordinate to the Director. Concurrently with this Treasury Decision, ATF Order 1130.7 is being published elsewhere in this issue of the **Federal Register**. Through this order, the Director has delegated most of the authorities in the affected regulations to the appropriate ATF officers and specified the ATF officers with whom applications, notices and other reports, which are not ATF forms, are filed.

EFFECTIVE DATE: August 28, 2000.

FOR FURTHER INFORMATION CONTACT: Robert Ruhf, Regulations Division, Bureau of Alcohol, Tobacco and

Firearms, 650 Massachusetts Avenue NW, Washington, DC 20226, (202–927–8220).

SUPPLEMENTARY INFORMATION:

Background

Pursuant to Treasury Order 120–01 (formerly 221), dated June 6, 1972, the Secretary of the Treasury delegated to the Director of the Bureau of Alcohol, Tobacco and Firearms (ATF), the authority to enforce, among other laws, the provisions of the Federal Alcohol Administration (FAA) Act. The Director has subsequently redelegated certain of these authorities to appropriate subordinate officers by way of various means, including by regulation, ATF delegation orders, regional directives, or similar delegation documents. As a result, to ascertain what particular officer is authorized to perform a particular function under the FAA Act, each of these various delegation instruments must be consulted. Similarly, each time a delegation of authority is revoked or redelegated, each of the delegation documents must be reviewed and amended as necessary.

ATF has determined that this multiplicity of delegation instruments complicates and hinders the task of determining which ATF officer is authorized to perform a particular function. ATF also believes these multiple delegation instruments exacerbate the administrative burden associated with maintaining up-to-date delegations, resulting in an undue delay in reflecting current authorities.

Accordingly, this final rule rescinds all authorities of the Director in parts 6, 8, 10 and 11 that were previously delegated and places those authorities with the ''appropriate ATF officer.'' Most of the authorities of the Director that were not previously delegated are also placed with the ''appropriate ATF officer.'' Along with this final rule, ATF is publishing ATF Order 1130.7, Delegation Order—Delegation of the Director's Authorities in Parts 6, 8, 10 and 11, which delegates certain of these authorities to the appropriate organizational level. The effect of these changes is to consolidate all delegations of authority in parts 6, 8, 10 and 11 into one delegation instrument. This action both simplifies the process for determining what ATF officer is authorized to perform a particular function and facilitates the updating of delegations in the future. As a result, delegations of authority will be reflected in a more timely and user-friendly manner.

In addition, this final rule also amends parts 6, 8, 10 and 11 to provide that the submission of documents other than ATF forms (such as letterhead applications, notices and reports) must be filed with the ''appropriate ATF officer'' identified in ATF Order 1130.7. These changes will facilitate the identification of the officer with whom forms and other required submissions are filed.

This final rule also makes various technical amendments to 27 CFR parts 6, 8, 10 and 11. New sections are added in each part to recognize the authority of the Director to delegate regulatory authorities and to identify ATF Order 1130.7 as the instrument reflecting such delegations.

ATF has begun to make similar changes in delegations to other parts of Title 27 of the Code of Federal Regulations through separate rulemakings. By amending the regulations part by part, rather than in one large rulemaking document and ATF Order, ATF minimizes the time expended in notifying interested parties of current delegations of authority.

Paperwork Reduction Act

The provisions of the Paperwork Reduction Act of 1995, Public Law 104–13, 44 U.S.C. Chapter 35, and its implementing regulations, 5 CFR part 1320, do not apply to this final rule because there are no new or revised recordkeeping or reporting requirements.

Regulatory Flexibility Act

Because no notice of proposed rulemaking is required for this rule, the provisions of the Regulatory Flexibility Act (5 U.S.C. 601 *et seq.*) do not apply.

Executive Order 12866

It has been determined that this rule is not a significant regulatory action because it will not: (1) Have an annual effect on the economy of $100 million or more or adversely affect in a material way the economy, a sector of the economy, productivity, competition, jobs, the environment, public health or safety, or State, local or tribal governments or communities; (2) Create a serious inconsistency or otherwise interfere with an action taken or planned by another agency; (3) Materially alter the budgetary impact of entitlements, grants, user fees, or loan programs or the rights and obligations of recipients thereof; or (4) Raise novel legal or policy issues arising out of legal mandates, the President's priorities, or the principles set forth in Executive Order 12866.

Administrative Procedure Act

Because this final rule merely makes technical amendments and conforming changes to improve the clarity of the regulations, it is unnecessary to issue this final rule with notice and public procedure under 5 U.S.C. 553(b). Similarly it is unnecessary to subject this final rule to the effective date limitation of 5 U.S.C. 553(d).

Drafting Information

The principal author of this document is Robert Ruhf, Regulations Division, Bureau of Alcohol, Tobacco and Firearms.

List of Subjects

27 CFR Part 6

Advertising, Alcohol and alcoholic beverages, Antitrust, Credit, Trade agreements and Trade practices.

27 CFR Part 8

Alcohol and alcoholic beverages, Antitrust, Trade agreements and Trade practices.

27 CFR Part 10

Alcohol and alcoholic beverages, Antitrust, Trade agreements and Trade practices.

27 CFR Part 11

Alcohol and alcoholic beverages, Antitrust, Trade agreements and Trade practices.

Authority and Issuance

Title 27, Code of Federal Regulations is amended to read as follows:

PART 6—TIED HOUSE

Paragraph 1. The authority citation for part 6 continues to read as follows:

Authority: 15 U.S.C. 49–50; 27 U.S.C. 202 and 205; 44 U.S.C. 3504(h).

Par. 2. Section 6.5 is redesignated as § 6.6.

Par. 3. A new section 6.5 is added and reads as follows:

§ 6.5 Delegations of the Director.

Most of the regulatory authorities of the Director contained in this part 6 are delegated to appropriate ATF officers. These ATF officers are specified in ATF Order 1130.7, Delegation Order—Delegation of the Director's Authorities in 27 CFR Parts 6, 8, 10 and 11. ATF delegation orders, such as ATF Order 1130.7, are available to any interested person by mailing a request to the ATF Distribution Center, P.O. Box 5950, Springfield, Virginia 22150–5190, or by accessing the ATF web site (http://www.atf.treas.gov/).

Par. 4. In newly designated § 6.6, paragraph (c) is amended by removing the words ''Deputy Associate Director

(Regulatory Enforcement Programs)'' each time it appears and adding in its place the words ''appropriate ATF officer'' and by revising paragraph (b) to read as follows:

§ 6.6 Administrative provisions.

* * * * *

(b) Examination and subpoena. Any appropriate ATF officer shall at all reasonable times have access to, for the purpose of examination, and the right to copy any documentary evidence of any person, partnership, or corporation being investigated or proceeded against. An appropriate ATF officer shall also have the power to require by subpoena the attendance and testimony of witnesses and the production of all such documentary evidence relating to any matter under investigation, upon a satisfactory showing the requested evidence may reasonably be expected to yield information relevant to any matter being investigated under the Act.

* * * * *

Par. 5–6. Section 6.11 is amended by removing the definitions of ''ATF officer'' and ''Deputy Associate Director (Regulatory Enforcement Programs)'' and by adding in alphabetically order a new definition of ''appropriate ATF officer'' to read as follows:

§ 6.11 Meaning of terms.

* * * * *

Appropriate ATF Officer. An officer or employee of the Bureau of Alcohol, Tobacco and Firearms (ATF) authorized to perform any functions relating to the administration or enforcement of this part by ATF Order 1130.7, Delegation Order—Delegation of the Director's Authorities in 27 CFR Parts 6, 8, 10 and 11.

* * * * *

PART 8—EXCLUSIVE OUTLETS

Par. 7. The authority citation for part 8 continues to read as follows:

Authority: 15 U.S.C. 49–50; 27 U.S.C. 202 and 205; 44 U.S.C. 3504(h).

Par. 8. Section 8.5 is redesignated as § 8.6.

Par. 9. A new section 8.5 is added and reads as follows:

§ 8.5 Delegations of the Director.

Most of the regulatory authorities of the Director contained in this part 8 are delegated to appropriate ATF officers. These ATF officers are specified in ATF Order 1130.7, Delegation Order—Delegation of the Director's Authorities in 27 CFR Parts 6, 8, 10 and 11. ATF delegation orders, such as ATF Order 1130.7, are available to any interested person by mailing a request to the ATF Distribution Center, P.O. Box 5950, Springfield, Virginia 22150–5190, or by accessing the ATF web site (http://www.atf.treas.gov/).

Par. 10. Paragraph (c) of newly designated § 8.6 is amended by removing the words ''Deputy Associate Director (Regulatory Enforcement Programs)'' each place it appears and adding, in place thereof, the words ''appropriate ATF officer'' and revising paragraph (b) to read as follows:

§ 8.6 Administrative provisions.

* * * * *

(b) *Examination and subpoena.* Any appropriate ATF officer shall at all reasonable times have access to, for the purpose of examination, and the right to copy any documentary evidence of any person, partnership, or corporation being investigated or proceeded against. An appropriate ATF officer shall also have the power to require by subpoena the attendance and testimony of witnesses and the production of all such documentary evidence relating to any matter under investigation, upon a satisfactory showing the requested evidence may reasonably be expected to yield information relevant to any matter being investigated under the Act.

* * * * *

Par. 11.–12. Section 8.11 is amended by removing the definitions of ''ATF officer'' and ''Deputy Associate Director (Regulatory Enforcement Programs)'' and by adding in alphabeltical order a new definition of ''appropriate ATF officer'' to read as follows:

§ 8.11 Meaning of terms.

* * * * *

Appropriate ATF Officer. An officer or employee of the Bureau of Alcohol, Tobacco and Firearms (ATF) authorized to perform any functions relating to the administration or enforcement of this part by ATF Order 1130.7, Delegation Order—Delegation of the Director's Authorities in 27 CFR Parts 6, 8, 10 and 11.

* * * * *

PART 10—COMMERCIAL BRIBERY

Par. 13. The authority citation for part 10 continues to read as follows:

Authority: 15 U.S.C. 49–50; 27 U.S.C. 202 and 205; 44 U.S.C. 3504(h).

Par. 14. Section 10.5 is redesignated as § 10.6.

Par. 15. A new section 10.5 is added and reads as follows:

§ 10.5 Delegations of the Director.

Most of the regulatory authorities of the Director contained in this part 10 are delegated to appropriate ATF officers. These ATF officers are specified in ATF Order 1130.7, Delegation Order—Delegation of the Director's Authorities in 27 CFR Parts 6, 8, 10 and 11. ATF delegation orders, such as ATF Order 1130.7, are available to any interested person by mailing a request to the ATF Distribution Center, P.O. Box 5950, Springfield, Virginia 22150–5190, or by accessing the ATF web site (http://www.atf.treas.gov/).

Par. 16. Paragraph (c) of newly designated § 10.6 is amended by removing the words ''Deputy Associate Director (Regulatory Enforcement Programs)'' each time it appears and adding in its place the words ''appropriate ATF officer,'' and paragraph (b) is revised to read as follows:

§ 10.6 Administrative Provisions.

* * * * *

(b) Examination and subpoena. Any appropriate ATF officer shall at all reasonable times have access to, for the purpose of examination, and the right to copy any documentary evidence of any person, partnership, or corporation being investigated or proceeded against. An appropriate ATF officer shall also have the power to require by subpoena the attendance and testimony of witnesses and the production of all such documentary evidence relating to any matter under investigation, upon a satisfactory showing the requested evidence may reasonably be expected to yield information relevant to any matter being investigated under the Act.

* * * * *

Par. 17–18. Section 10.11 is amended by removing the definitions of ''ATF officer'' and ''Deputy Associate Director (Regulatory Enforcement Programs)'' and by adding in alphabetical order a new definition of ''appropriate ATF officer'' to read as follows:

§ 10.11 Meaning of terms.

* * * * *

Appropriate ATF Officer. An officer or employee of the Bureau of Alcohol, Tobacco and Firearms (ATF) authorized to perform any functions relating to the administration or enforcement of this part by ATF Order 1130.7, Delegation Order—Delegation of the Director's Authorities in 27 CFR parts 6, 8, 10 and 11.

PART 11—CONSIGNMENT SALES

Par. 19. The authority citation for part 11 continues to read as follows:

Authority: 15 U.S.C. 49–50; 27 U.S.C. 202 and 205.

Par. 20. Section 11.5 is redesignated as § 11.6.

Par. 21. A new section 11.5 is added and reads as follows:

§ 11.5 Delegations of the Director.

Most of the regulatory authorities of the Director contained in this part 11 are delegated to appropriate ATF officers. These ATF officers are specified in ATF Order 1130.7, Delegation Order—Delegation of the Director's Authorities in 27 CFR Parts 6, 8, 10 and 11. ATF delegation orders, such as ATF Order 1130.7, are available to any interested person by mailing a request to the ATF Distribution Center, P.O. Box 5950, Springfield, Virginia 22150–5190, or by accessing the ATF web site (http://www.atf.treas.gov/).

Par. 22. Paragraph (b) of newly designated § 11.6 is revised to read as follows:

§ 11.6 Administrative provisions.

* * * * *

(b) *Examination and subpoena.* Any appropriate ATF officer shall at all reasonable times have access to, for the purpose of examination, and the right to copy any documentary evidence of any person, partnership, or corporation being investigated or proceeded against. An appropriate ATF officer shall also have the power to require by subpoena the attendance and testimony of witnesses and the production of all such documentary evidence relating to any matter under investigation, upon a satisfactory showing the requested evidence may reasonably be expected to yield information relevant to any matter being investigated under the Act.

* * * * *

Par. 23. Section 11.11 is amended by removing the definition of ''ATF officer'' and by adding in alphabetical order a new definition of ''appropriate ATF officer'' to read as follows:

§ 11.11 Meaning of terms.

* * * * *

Appropriate ATF Officer. An officer or employee of the Bureau of Alcohol, Tobacco and Firearms (ATF) authorized to perform any functions relating to the administration or enforcement of this part by ATF Order 1130.7, Delegation Order—Delegation of the Director's Authorities in 27 CFR parts 6, 8, 10 and 11.

* * * * *

Signed: May 18, 2000.

Bradley A. Buckles,

Director.

Approved: June 21, 2000.

John P. Simpson,

Deputy Assistant Secretary (Regulatory, Tariff and Trade Enforcement).

[FR Doc. 00–21901 Filed 8–25–00; 8:45 am]

BILLING CODE 4810–31–P

DEPARTMENT OF TRANSPORTATION

Coast Guard

33 CFR Part 117

[CGD08–00–020]

RIN 2115–AE47

Drawbridge Operating Regulation; Red River, LA

AGENCY: Coast Guard, DOT.

ACTION: Final rule.

SUMMARY: The Coast Guard is removing the operating regulation for the State Route 107 vertical lift bridge across the Red River, mile 59.5, at Moncla, Louisiana. A new State Route 107 fixed bridge has opened and the vertical lift bridge has been removed from the waterway. The regulation governing the vertical lift bridge operation is no longer needed.

DATES: This regulation becomes effective on August 28, 2000.

ADDRESSES: Documents referred to in this notice are available for inspection or copying at the office of the Eighth Coast Guard District, Bridge Administration Branch, Hale Boggs Federal Building, room 1313, 501 Magazine Street, New Orleans, Louisiana 70130–3396 between 7 a.m. and 3 p.m., Monday through Friday, except Federal holidays. The telephone number is (504) 589–2965. Commander (ob) maintains the public docket for this rulemaking.

FOR FURTHER INFORMATION CONTACT: Mr. David Frank, Bridge Administration Branch, telephone number 504–589–2965.

SUPPLEMENTARY INFORMATION:

Background

A new State Route 107 fixed bridge across the Red River, mile 59.9, at Moncla, Louisiana, was opened to traffic in March of 2000. The old State Route 107 vertical lift bridge across the Red River, mile 59.5, was removed. The elimination of this drawbridge necessitates the removal of the drawbridge operation regulation that pertained to this draw. This rule removes the regulation for this bridge in § 117.491(a).

The Coast Guard has determined that good cause exists under the Administrative Procedure Act (5 U.S.C. 553) to forgo notice and comment for this rulemaking because removing the bridge makes the need for the regulation unnecessary. The Coast Guard has also determined that good cause exists for the rule to become effective upon publication in the **Federal Register** as the bridge was removed in July, 2000.

Regulatory Evaluation

This final rule is not a significant regulatory action under section 3(f) of Executive Order (E.O.) 12866 and does not require an assessment of potential costs and benefits under section 6(a)(3) of that Order. It has not been reviewed by the Office of Management and Budget under that Order. It is not significant under the regulatory policies and procedures of the Department of Transportation (DOT) (44 FR 11040; February 26, l979). The Coast Guard expects the economic impact of this final rule to be so minimal that a full Regulatory Evaluation under paragraph 10e of the regulatory policies and procedures of DOT is unnecessary.

Small Entities

Under the Regulatory Flexibility Act (5 U.S.C. 601 *et seq.*), the Coast Guard considers whether this final rule will have a significant economic impact on a substantial number of small entities. ''Small entities'' include (1) small businesses, not-for-profit organizations that are independently owned and operated and are not dominant in their fields, and (2) governmental jurisdictions with populations of less than 50,000.

This rule will have no impact on either vehicular or navigational traffic because the regulation being removed applies to a bridge that has been removed. Because it will have no impact, the Coast Guard certifies under 5 U.S.C. 605(b) that it will not have any economic impact on a substantial number of small entities.

Collection of Information

This final rule would call for no new collection of information under the Paperwork Reduction Act of 1995 (44 U.S.C. 3501–3520).

Federalism

We have analyzed this final rule under Executive Order 13132 and have determined that this final rule does not have implications for federalism under that Order.

Unfunded Mandates Reform Act

The Unfunded Mandates Reform Act of 1995 (2 U.S.C. 1531–1538) governs the issuance of Federal regulations that require unfunded mandates. An unfunded mandate is a regulation that requires a State, local, or tribal government or the private sector to incur direct costs without the Federal Government's having first provided the funds to pay those costs. This final rule would not impose an unfunded mandate.

Taking of Private Property

This final rule would not effect a taking of private property or otherwise have taking implications under Executive Order 12630, Governmental Actions and Interference with Constitutionally Protected Property Rights.

Civil Justice Reform

This final rule meets applicable standards in sections 3(a) and 3(b)(2) of Executive Order 12988, Civil Justice Reform, to minimize litigation, eliminate ambiguity, and reduce burden.

Protection of Children

We have analyzed this final rule under Executive Order 13045, Protection of Children from Environmental Health Risks and Safety Risks. This final rule is not an economically significant rule and does not concern an environmental risk to health or risk to safety that may disproportionately affect children.

Environment

We considered the environmental impact of this final rule and concluded that, under figure 2–1, paragraph (32)(e), of Commandant Instruction M16475.1C, this final rule is categorically excluded from further environmental documentation. This final rule will change an existing special drawbridge operating regulation promulgated by a Coast Guard Bridge Administration Program action. A ''Categorical Exclusion Determination'' is available in the docket where indicated under **ADDRESSES.**

List of Subjects in 33 CFR Part 117

Bridges.

Regulations

For the reasons set out in the preamble, the Coast Guard is amending Part 117 of Title 33, Code of Federal Regulations, as follows:

PART 117—DRAWBRIDGE OPERATION REGULATIONS

1. The authority citation for Part 117 continues to read as follows:

Authority: 33 U.S.C. 499; 49 CFR 1.46; 33 CFR 1.05–1(g); section 117.255 also issued under the authority of Pub. L. 102–587, 105 Stat. 5039.

2. Section 117.491(a) is revised to read as follows:

§ 117.491 Red River.

(a) The draw of the Union Pacific Railroad bridge, mile 90.1, at Alexandria, shall open on signal if at least eight hours notice is given.

* * * * *

Dated: August 15, 2000.

K. J. Eldridge,

Captain, U.S. Coast Guard, Commander, 8th Coast Guard District, Acting.

[FR Doc. 00–21879 Filed 8–25–00; 8:45 am]

BILLING CODE 4910–15–U

DEPARTMENT OF TRANSPORTATION

Coast Guard

33 CFR Part 117

[CGD08–00–019]

RIN 2115–AE47

Drawbridge Operating Regulation; Tickfaw River, LA

AGENCY: Coast Guard, DOT.

ACTION: Final rule.

SUMMARY: The Coast Guard is removing the operating regulation for the State Route 22 swing bridge across the Tickfaw River, mile 7.2, at Killian, Louisiana. A new State Route 22 fixed bridge has opened and the swing bridge has been removed from the waterway. The regulation governing the swing bridge operation is no longer needed.

DATES: This regulation becomes effective on August 28, 2000.

ADDRESSES: Documents referred to in this notice are available for inspection or copying at the office of the Eighth Coast Guard District, Bridge Administration Branch, Hale Boggs Federal Building, room 1313, 501 Magazine Street, New Orleans, Louisiana 70130–3396 between 7 a.m. and 3 p.m., Monday through Friday, except Federal holidays. The telephone number is (504) 589–2965. Commander (ob) maintains the public docket for this rulemaking.

FOR FURTHER INFORMATION CONTACT: Mr. David Frank, Bridge Administration Branch, telephone number 504–589–2965.

SUPPLEMENTARY INFORMATION:

Background

A new State Route 22 fixed bridge across the Tickfaw River, mile 7.2, at Killian, Louisiana, was opened to traffic in March of 2000. The old State Route 22 swing bridge across the Tickfaw River, mile 7.2, was removed. The elimination of this drawbridge necessitates the removal of the drawbridge operation regulation that pertained to this draw. This rule removes the regulation for this bridge in § 117.506.

The Coast Guard has determined that good cause exists under the Administrative Procedure Act (5 U.S.C. 553) to forego notice and comment for this rulemaking because removing the bridge makes the need for the regulation unnecessary. The Coast Guard has also determined that good cause exists for the rule to become effective upon publication in the **Federal Register** as the bridge was removed in April, 2000.

Regulatory Evaluation

This final rule is not a significant regulatory action under section 3(f) of Executive Order 12866 and does not require an assessment of potential costs and benefits under section 6(a)(3) of that Order. It has not been reviewed by the Office of Management and Budget under that Order. It is not significant under the regulatory policies and procedures of the Department of Transportation (DOT)(44 FR 11040; February 26, 1979). The Coast Guard expects the economic impact of this final rule to be so minimal that a full Regulatory Evaluation under paragraph 10e of the regulatory policies and procedures of DOT is unnecessary.

Small Entities

Under the Regulatory Flexibility Act (5 U.S.C. 601 *et seq.*), the Coast Guard considers whether this final rule will have a significant economic impact on a substantial number of small entities. ''Small entities'' include (1) small businesses, not-for-profit organizations that are independently owned and operated and are not dominant in their fields, and (2) governmental jurisdictions with populations of less than 50,000.

This rule will have no impact on either vehicular or navigational traffic because the regulation being removed applies to a bridge that has been removed. Because it will have no impact, the Coast Guard certifies under 5 U.S.C. 605(b) that it will not have any economic impact on a substantial number of small entities.

Collection of Information

This final rule would call for no new collection of information under the Paperwork Reduction Act of 1995 (44 U.S.C. 3501–3520.).

Federalism

We have analyzed this final rule under Executive Order 13132 and have determined that this final rule does not have implications for federalism under that Order.

Unfunded Mandates Reform Act

The Unfunded Mandates Reform Act of 1995 (2 U.S.C. 1531–1538) governs the issuance of Federal regulations that require unfunded mandates. An unfunded mandate is a regulation that requires a State, local, or tribal government or the private sector to incur direct costs without the Federal Government's having first provided the funds to pay those costs. This final rule would not impose an unfunded mandate.

Taking of Private Property

This final rule would not effect a taking of private property or otherwise have taking implications under Executive Order 12630, Governmental Actions and Interference with Constitutionally Protected Property Rights.

Civil Justice Reform

This final rule meets applicable standards in sections 3(a) and 3(b)(2) of Executive Order 12988, Civil Justice Reform, to minimize litigation, eliminate ambiguity, and reduce burden.

Protection of Children

We have analyzed this final rule under Executive Order 13045, Protection of Children from Environmental Health Risks and Safety Risks. This final rule is not an economically significant rule and does not concern an environmental risk to health or risk to safety that may disproportionately affect children.

Environment

We considered the environmental impact of this final rule and concluded that, under figure 2–1, paragraph (32)(e), of Commandant Instruction M16475.lC, this final rule is categorically excluded from further environmental documentation. This final rule will change an existing special drawbridge operating regulation promulgated by a Coast Guard Bridge Administration Program action. A ''Categorical Exclusion Determination'' is available in the docket where indicated under **ADDRESSES**.

List of Subjects in 33 CFR Part 117

Bridges.

Regulations

For the reasons set out in the preamble, the Coast Guard is amending Part 117 of Title 33, Code of Federal Regulations, as follows:

PART 117—DRAWBRIDGE OPERATION REGULATIONS

1. The authority citation for Part 117 continues to read as follows:

Authority: 33 U.S.C. 499; 49 CFR 1.46; 33 CFR 1.05–1(g); section 117.255 also issued under the authority of Pub. L. 102–587, 105 Stat. 5039.

§ 117.506 [Removed]

2. Section 117.506 is removed.

Dated: August 15, 2000.

K.J. Eldridge,

Captain, U.S. Coast Guard, Commander, 8th Coast Guard District, Acting.

[FR Doc. 00–21878 Filed 8–25–00; 8:45 am]

BILLING CODE 4910–15–U

POSTAL SERVICE

39 CFR Part 20

Priority Mail Global Guaranteed

AGENCY: Postal Service.

ACTION: Amendment to interim rule.

SUMMARY: The Postal Service is amending the interim rule on Priority Mail Global Guaranteed service to change rates for this service, add additional acceptance offices, introduce optional document reconstruction insurance coverage up to $2,499, and provide service to China.

EFFECTIVE DATE: August 27, 2000. Comments on the amendment to the interim rule must be received on or before September 27, 2000.

ADDRESSES: Written comments should be sent to E/PS, Business Initiatives, 200 E. Mansell Ct., Suite 300, Roswell, GA 30076–9700. Copies of all written comments will be available for public inspection between 9 a.m. and 4 p.m., Monday through Friday, in Business Initiatives, 200 E. Mansell Ct., Suite 300, Roswell, GA.

FOR FURTHER INFORMATION CONTACT: Malcolm Hunt, (770) 360–1104.

SUPPLEMENTARY INFORMATION: On April 19, 1999, the Postal Service announced in the **Federal Register** (62 FR 19039–19042) the introduction of Priority Mail Global Guaranteed on an interim basis.

The Postal Service, through an alliance with DHL Worldwide Express Inc., is offering an enhanced expedited service, Priority Mail Global Guaranteed, from selected locations in the United States to most countries. This service offers day-certain delivery with postage refund guarantee and document reconstruction coverage of $100 for allowable contents.

On November 4, 1999, the Postal Service announced in the **Federal Register** (64 FR 60106–60109) an amendment to the interim rule to add more U.S. acceptance locations and to extend the service to more destination countries. On May 26, 2000, the Postal Service again amended the interim rule in the **Federal Register** (65 FR 34096–34101) to change rates for Priority Mail Global Guaranteed service and to provide service to most countries. Public comments were requested by June 26, 2000, and by that date one comment was received. The comment related to the way in which the Postal Service categorized the U.S. acceptance offices and how the acceptance offices were selected.

The acceptance offices are selected on their ability to meet the stringent service standards for this service based on local considerations such as timely transportation, mail processing capabilities, and access to national transportation. Most decisions are made by local postal officials and are based on local conditions and the ability to have reasonable acceptance times. The Postal Service will continue to evaluate the acceptance network and expand it when service can be reasonably provided.

The Postal Service is amending the interim rule on Priority Mail Global Guaranteed service to change rates for this service, add additional acceptance offices, introduce optional document reconstruction insurance coverage up to $2,499, and provide service to China.

The rates have been refined to have separate rates for all rates groups. In addition, a number of destinations are assigned to different rates groups. The redesigned rate schedule better reflects the cost of providing the service.

Service is also being added to China. It should be noted that due to circumstances beyond the control of the Postal Service, service to Brazil has been temporarily suspended. Service will be available to all country destinations listed in the International Mail Manual (IMM) except Afghanistan, Ascension, Brazil, Iraq, Japan, Democratic People's Republic of Korea (North), Libya, Pitcairn Island, Saint Helena, Sudan, and Tristan de Cunha.

The applicable rates and the destination countries that are associated with each rate group are as follows:

Weight not over (lbs.)	Rate group							
	1	2	3	4	5	6	7	8
0.5	$19.00	$20.00	$24.00	$29.00	$40.00	$28.00	$24.00	$60.00
1	28.00	28.00	30.00	38.00	46.00	41.00	35.00	68.00
2	33.00	35.00	38.00	47.00	56.00	51.00	41.00	79.00
3	35.00	41.00	45.00	54.00	70.00	57.00	48.00	91.00
4	38.00	45.00	53.00	61.00	84.00	63.00	54.00	102.00
5	41.00	50.00	61.00	68.00	97.00	70.00	60.00	114.00
6	43.00	53.00	67.00	75.00	110.00	75.00	65.00	126.00
7	46.00	56.00	71.00	81.00	122.00	81.00	70.00	138.00
8	48.00	60.00	75.00	88.00	134.00	86.00	74.00	150.00
9	50.00	63.00	80.00	95.00	147.00	91.00	79.00	162.00
10	53.00	65.00	84.00	99.00	156.00	97.00	82.00	170.00
11	55.00	68.00	87.00	104.00	166.00	100.00	86.00	181.00
12	57.00	71.00	91.00	110.00	176.00	104.00	90.00	193.00
13	60.00	74.00	94.00	115.00	186.00	108.00	94.00	205.00
14	62.00	76.00	98.00	120.00	196.00	112.00	98.00	216.00
15	64.00	79.00	101.00	125.00	205.00	116.00	102.00	228.00
16	67.00	82.00	104.00	131.00	214.00	120.00	106.00	239.00
17	69.00	84.00	108.00	136.00	222.00	124.00	110.00	250.00
18	71.00	87.00	111.00	141.00	229.00	128.00	114.00	261.00
19	74.00	90.00	115.00	146.00	237.00	132.00	118.00	272.00
20	76.00	92.00	118.00	151.00	244.00	136.00	122.00	283.00
21	78.00	95.00	121.00	156.00	251.00	139.00	126.00	292.00
22	80.00	97.00	125.00	161.00	259.00	143.00	130.00	301.00
23	82.00	100.00	128.00	166.00	266.00	147.00	134.00	308.00
24	85.00	103.00	132.00	171.00	274.00	151.00	138.00	315.00
25	87.00	105.00	135.00	176.00	281.00	155.00	142.00	323.00
26	89.00	108.00	138.00	181.00	289.00	159.00	146.00	330.00
27	91.00	110.00	142.00	185.00	296.00	163.00	150.00	337.00
28	93.00	113.00	145.00	190.00	304.00	167.00	153.00	345.00
29	95.00	115.00	148.00	195.00	311.00	171.00	157.00	352.00
30	98.00	119.00	153.00	202.00	322.00	177.00	163.00	363.00
31	100.00	122.00	157.00	207.00	329.00	181.00	167.00	371.00
32	102.00	124.00	160.00	212.00	337.00	185.00	171.00	378.00
33	104.00	126.00	164.00	217.00	344.00	189.00	175.00	386.00
34	107.00	127.00	167.00	222.00	352.00	193.00	179.00	393.00
35	109.00	129.00	170.00	227.00	360.00	197.00	183.00	401.00
36	111.00	131.00	174.00	231.00	367.00	201.00	187.00	408.00
37	113.00	133.00	177.00	236.00	375.00	205.00	191.00	416.00
38	115.00	135.00	181.00	241.00	382.00	209.00	195.00	423.00
39	117.00	137.00	184.00	246.00	389.00	213.00	199.00	430.00
40	119.00	139.00	187.00	251.00	395.00	217.00	203.00	438.00
41	121.00	141.00	191.00	256.00	402.00	221.00	207.00	445.00
42	125.00	143.00	194.00	261.00	409.00	225.00	211.00	453.00
43	127.00	145.00	198.00	266.00	416.00	229.00	215.00	460.00
44	129.00	146.00	201.00	271.00	423.00	233.00	219.00	468.00
45	132.00	148.00	205.00	275.00	430.00	237.00	223.00	475.00
46	134.00	150.00	208.00	280.00	437.00	241.00	227.00	482.00
47	136.00	151.00	211.00	285.00	443.00	245.00	231.00	490.00
48	138.00	153.00	215.00	290.00	450.00	249.00	235.00	497.00
49	141.00	155.00	218.00	295.00	457.00	253.00	239.00	505.00
50	143.00	158.00	224.00	303.00	469.00	259.00	245.00	518.00
51	147.00	160.00	227.00	308.00	476.00	259.00	249.00	533.00
52	149.00	160.00	231.00	313.00	483.00	267.00	253.00	533.00
53	151.00	164.00	234.00	318.00	490.00	271.00	257.00	549.00
54	154.00	164.00	238.00	323.00	497.00	275.00	261.00	549.00
55	155.00	167.00	241.00	328.00	504.00	278.00	265.00	562.00
56	157.00	167.00	245.00	333.00	511.00	283.00	270.00	562.00
57	157.00	170.00	248.00	338.00	518.00	286.00	274.00	574.00
58	157.00	170.00	251.00	343.00	524.00	291.00	278.00	574.00
59	157.00	173.00	255.00	348.00	531.00	294.00	282.00	587.00
60	157.00	173.00	258.00	353.00	538.00	299.00	285.00	587.00
61	164.00	176.00	262.00	358.00	545.00	302.00	290.00	602.00
62	165.00	176.00	265.00	362.00	551.00	308.00	292.00	602.00
63	167.00	179.00	269.00	367.00	559.00	310.00	298.00	617.00
64	168.00	179.00	272.00	372.00	562.00	316.00	298.00	617.00
65	169.00	182.00	276.00	377.00	573.00	318.00	305.00	632.00
66	169.00	182.00	279.00	382.00	573.00	324.00	305.00	632.00
67	169.00	186.00	282.00	387.00	584.00	326.00	313.00	647.00

Weight not over (lbs.)	Rate group							
	1	2	3	4	5	6	7	8
68	169.00	186.00	286.00	392.00	584.00	332.00	313.00	647.00
69	169.00	189.00	289.00	397.00	595.00	334.00	320.00	662.00
70	169.00	189.00	293.00	402.00	595.00	340.00	320.00	662.00

Country	Rate group
Afghanistan [a]	–
Albania	8
Algeria	8
Andorra	6
Angola	8
Anguilla	7
Antigua & Barbuda	7
Argentina	5
Armenia	8
Aruba	7
Ascension [a]	–
Australia	4
Austria	6
Azerbaijan	8
Bahamas	7
Bahrain	4
Bangladesh	4
Barbados	7
Belarus	8
Belgium	3
Belize	5
Benin	8
Bermuda	7
Bhutan	5
Bolivia	5
Bosnia-Herzegovina	8
Botswana	8
Brazil [b]	5
British Virgin Islands	7
Brunei Darussalam	8
Bulgaria	8
Burkina Faso	8
Burma (Myanmar)	8
Burundi	8
Cambodia	8
Cameroon	8
Canada	1
Cape Verde	8
Cayman Islands	7
Central African Republic	8
Chad	8
Chile	5
China	4
Colombia	5
Comoros	8
Congo, Democratic Republic of the	8
Congo, Republic of the	8
Costa Rica	5
Cote d'Ivoire (Ivory Coast)	8
Croatia	8
Cuba	8
Cyprus	4
Czech Republic	8
Denmark	6
Djibouti	8
Dominica	7
Dominican Republic	7
Ecuador	5
Egypt	4
El Salvador	5
Equatorial Guinea	8
Eritrea	8
Estonia	8
Ethiopia	8
Falkland Islands	5
Faroe Islands	6
Fiji	5
Finland	6
France	3
French Guiana	5
French Polynesia	8
Gabon	8
Gambia	8
Georgia, Republic of	8
Germany	3
Ghana	8
Gibraltar	6
Great Britain & Northern Ireland	3
Greece	6
Greenland	6
Grenada	7
Guadeloupe	7
Guatemala	5
Guinea	8
Guinea-Bissau	8
Guyana	5
Haiti	7
Honduras	5
Hong Kong	3
Hungary	8
Iceland	6
India	4
Indonesia	4
Iran	4
Iraq [a]	–
Ireland (Eire)	3
Israel	4
Italy	3
Jamaica	7
Japan [a]	–
Jordan	4
Kazakhstan	8
Kenya	8
Kiribati	8
Korea, Democratic People's Republic of (North) [a]	–
Korea, Republic of (South)	4
Kuwait	4
Kyrgyzstan	8
Laos	8
Latvia	8
Lebanon	4
Lesotho	8
Liberia	8
Libya [a]	–
Liechtenstein	6
Lithuania	8
Luxembourg	3
Macao	3
Macedonia, Republic of	8
Madagascar	8
Malawi	8
Malaysia	4
Maldives	8
Mali	8
Malta	6
Martinique	7
Mauritania	8
Mauritius	8
Mexico	2
Moldova	8
Mongolia	8
Montserrat	7
Morocco	8
Mozambique	8
Namibia	8
Nauru	8
Nepal	8
Netherlands	3
Netherlands Antilles	7
New Caledonia	5
New Zealand	4
Nicaragua	5
Niger	8
Nigeria	8
Norway	6
Oman	4
Pakistan	4
Panama	5
Papua New Guinea	5
Paraguay	5
Peru	5
Philippines	4
Pitcairn Island [a]	–
Poland	8
Portugal	6
Qatar	4
Reunion	8
Romania	8
Russia	8
Rwanda	8
St Christopher (St Kitts) & Nevis	7
Saint Helena [a]	–
Saint Lucia	7
Saint Pierre & Miquelon	1
Saint Vincent & Grenadines	7
San Marino	3
Sao Tome & Principe	8
Saudi Arabia	4
Senegal	8
Serbia-Montenegro (Yugoslavia)	8
Seychelles	8
Sierra Leone	8
Singapore	3
Slovak Republic (Slovakia)	8
Slovenia	8
Solomon Islands	8
Somalia	8
South Africa	8
Spain	6
Sri Lanka	4
Sudan [a]	–
Suriname	5
Swaziland	8
Sweden	6
Switzerland	6
Syrian Arab Republic (Syria)	4
Taiwan	3
Tajikistan	8
Tanzania	8
Thailand	4
Togo	8
Tonga	8
Trinidad & Tobago	7

Country	Rate group
Tristan da Cunha [a]	–
Tunisia	8
Turkey	4
Turkmenistan	8
Turks & Caicos Islands	7
Tuvalu	8
Uganda	8
Ukraine	8
United Arab Emirates	4
Uruguay	5
Uzbekistan	8
Vanuatu	5
Vatican City	3
Venezuela	5
Vietnam	4
Wallis & Futuna Islands	4
Western Samoa	4
Yemen	4
Zambia	8
Zimbabwe	8

[a] No service.
[b] Service temporarily suspended.

Priority Mail Global Guaranteed service is expanded to originate from all post offices in the following 3-digit ZIP Code areas.

State	ZIP Code areas
AL—Alabama	352, 356–358, 361–362, 366, 368
AR—Arkansas	722–723
AZ—Arizona	850, 852–853, 857
CA—California	900, 902–908, 910–922, 926–928, 937, 939–941, 943–951, 954
CO—Colorado	800–803, 805–806, 808–810
CT—Connecticut	060–069
DC—District of Columbia.	200, 202–203, 205
DE—Delaware	197–199
FL—Florida	320–323, 326–339, 342, 344, 346–347, 349
GA—Georgia	300–319
IA—Iowa	500–504, 506–507, 510–511, 515–516, 520, 522–528
IL—Illinois	600–620, 622, 625–627, 629
IN—Indiana	460–479
KS—Kansas	660–662, 664–668, 674, 676
KY—Kentucky	400–406, 410–416, 421–424, 427
LA—Louisiana	700–701, 703–704, 707–708
MA—Massachusetts	010–027
MD—Maryland	206–212, 214–219
ME—Maine	039–041
MI—Michigan	480–497
MN—Minnesota	550–551, 553–554, 558–563
MO—Missouri	630–631, 633, 636–641, 644–648, 654–658
MS—Mississippi	383, 386, 389, 392, 394–395
MT—Montana	591
NC—North Carolina	270–282, 286–289
NE—Nebraska	680–681, 683–687
NH—New Hampshire.	010–011, 030–034, 036–038
NJ—New Jersey	070–089
NM—New Mexico	871
NY—New York	100–101, 103–149
OH—Ohio	430–458
OK—Oklahoma	730–731, 734–738, 740–741, 743–748
OR—Oregon	972
PA—Pennsylvania	150–176, 178–179, 189–191, 193–196
PR—Puerto Rico	006–007, 009
RI—Rhode Island	028–029
SC—South Carolina	297–299
SD—South Dakota	570–571
TN—Tennessee	370–374, 376–385
TX—Texas	750–756, 759–770, 772–778, 780–782, 784, 786–789, 791, 794–796, 799
UT—Utah	840–841, 843–847
VA—Virginia	201, 220–239, 244, 246
VI—Virgin Islands	008
VT—Vermont	054, 056
WA—Washington	980–985, 988–989
WI—Wisconsin	530–532, 534, 537, 540, 543, 546–549
WV—West Virginia	247–248, 250–257, 260, 267
WY—Wyoming	820

Currently, Priority Mail Global Guaranteed service includes document reconstruction insurance up to $100 per shipment at no additional charge. The Postal Service is introducing optional document reconstruction insurance up to a maximum of $2,499. The fee for this coverage is $0.70 per $100 of additional insurance over the initial reconstruction insurance coverage for $100 that is provided. Optional insurance may be purchased only for the declared value of the shipment or a lesser amount as limited by the country of destination, content, or value.

Although the Postal Service is exempted by 39 U.S.C. 410(a) from the advance notice requirements of the Administrative Procedure Act regarding proposed rulemaking (5 U.S.C. 553), the Postal Service invites public comment on the amendment to the interim rule at the above address.

The Postal Service is amending International Mail Manual chapter 2, Conditions for Mailing, which is incorporated by reference in the Code of Federal Regulations. See 39 CFR 20.1.

A transmittal letter changing the relevant pages in the International Mail Manual will be published and automatically transmitted to all subscribers. Notice of issuance of the transmittal will be published in the **Federal Register** as provided by 39 CFR 20.3.

List of Subjects in 39 CFR Part 20

Foreign relations, International postal service.

PART 20—[AMENDED]

1. The authority citation for 39 CFR part 20 continues to read as follows:

Authority: 5 U.S.C. 552(a); 39 U.S.C. 401, 404, 407, 408.

2. Chapter 2 of the International Mail Manual (IMM) is amended as follows:

2 Conditions for Mailing

210 Express Mail International Service

* * * * *

215 Priority Mail Global Guaranteed

215.1 Description

215.11 General

Priority Mail Global Guaranteed (PMGG) is an international expedited delivery service provided through an alliance with DHL Worldwide Express Inc. It provides reliable, high-speed, guaranteed, and time-definite service from certain post offices in the United States to a select number of international destinations. Service is guaranteed to meet service standards or postage is refunded. If a mail shipment is lost or damaged, liability is limited to a maximum of $100 for document reconstruction. Optional document reconstruction insurance is available up to $2,499.

* * * * *

215.3 Service Areas

215.31 U.S. Origins

Priority Mail Global Guaranteed items must be entered at post offices that are located in the following 3-digit ZIP Code areas:

State	ZIP Code areas
AL—Alabama	352, 356–358, 361–362, 366, 368
AR—Arkansas	722–723
AZ—Arizona	850, 852–853, 857
CA—California	900, 902–908, 910–922, 926–928, 937, 939–941, 943–951, 954
CO—Colorado	800–803, 805–806, 808–810
CT—Connecticut	060–069
DC—District of Columbia.	200, 202–203, 205
DE—Delaware	197–199
FL—Florida	320–323, 326–339, 342, 344, 346–347, 349
GA—Georgia	300–319
IA—Iowa	500–504, 506–507, 510–511, 515–516, 520, 522–528

State	ZIP Code areas
IL—Illinois	600–620, 622, 625–627, 629
IN—Indiana	460–479
KS—Kansas	660–662, 664–668, 674, 676
KY—Kentucky	400–406, 410–416, 421–424, 427
LA—Louisiana	700–701, 703–704, 707–708
MA—Massachusetts	010–027
MD—Maryland	206–212, 214–219
ME—Maine	039–041
MI—Michigan	480–497
MN—Minnesota	550–551, 553–554, 558–563
MO—Missouri	630–631, 633, 636–641, 644–648, 654–658
MS—Mississippi	383, 386, 389, 392, 394–395
MT—Montana	591
NC—North Carolina	270–282, 286–289
NE—Nebraska	680–681, 683–687
NH—New Hampshire.	010–011, 030–034, 036–038
NJ—New Jersey	070–089
NM—New Mexico	871
NY—New York	100–101, 103–149
OH—Ohio	430–458
OK—Oklahoma	730–731, 734–738, 740–741, 743–748
OR—Oregon	972
PA—Pennsylvania	150–176, 178–179, 189–191, 193–196
PR—Puerto Rico	006–007, 009
RI—Rhode Island	028–029
SC—South Carolina	297–299
SD—South Dakota	570–571
TN—Tennessee	370–374, 376–385
TX—Texas	750–756, 759–770, 772–778, 780–782, 784, 786–789, 791, 794–796, 799
UT—Utah	840–841, 843–847
VA—Virginia	201, 220–239, 244, 246
VI—Virgin Islands	008
VT—Vermont	054, 056
WA—Washington	980–985, 988–989
WI—Wisconsin	530–532, 534, 537, 540, 543, 546–549
WV—West Virginia	247–248, 250–257, 260, 267
WY—Wyoming	820

215.32 Foreign Destinations

Priority Mail Global Guaranteed service is available to all locations referenced in the Individual Country Listings except for the following:

Afghanistan
Ascension
Brazil (temporarily suspended)
Iraq
Japan
Korea, Democratic People's Republic of (North)
Libya
Pitcairn Island
Saint Helena
Sudan
Tristan de Cunha

* * * * *

215.5 Inquiries, Postage Refunds, and Indemnity Claims

215.51 Extent of Postal Service Liability for Lost or Damaged Contents

Liability for a lost or damaged shipment is limited to the lowest of the following:

a. $100 or the amount of additional optional insurance purchased.

b. The actual amount of the loss or damage.

c. The actual value of the contents.

* * * * *

215.6 Postage

215.61 Rates

Weight not over (lbs.)	Rate group							
	1	2	3	4	5	6	7	8
0.5	$19.00	$20.00	$24.00	$29.00	$40.00	$28.00	$24.00	$60.00
1	28.00	28.00	30.00	38.00	46.00	41.00	35.00	68.00
2	33.00	35.00	38.00	47.00	56.00	51.00	41.00	79.00
3	35.00	41.00	45.00	54.00	70.00	57.00	48.00	91.00
4	38.00	45.00	53.00	61.00	84.00	63.00	54.00	102.00
5	41.00	50.00	61.00	68.00	97.00	70.00	60.00	114.00
6	43.00	53.00	67.00	75.00	110.00	75.00	65.00	126.00
7	46.00	56.00	71.00	81.00	122.00	81.00	70.00	138.00
8	48.00	60.00	75.00	88.00	134.00	86.00	74.00	150.00
9	50.00	63.00	80.00	95.00	147.00	91.00	79.00	162.00
10	53.00	65.00	84.00	99.00	156.00	97.00	82.00	170.00
11	55.00	68.00	87.00	104.00	166.00	100.00	86.00	181.00
12	57.00	71.00	91.00	110.00	176.00	104.00	90.00	193.00
13	60.00	74.00	94.00	115.00	186.00	108.00	94.00	205.00
14	62.00	76.00	98.00	120.00	196.00	112.00	98.00	216.00
15	64.00	79.00	101.00	125.00	205.00	116.00	102.00	228.00
16	67.00	82.00	104.00	131.00	214.00	120.00	106.00	239.00
17	69.00	84.00	108.00	136.00	222.00	124.00	110.00	250.00
18	71.00	87.00	111.00	141.00	229.00	128.00	114.00	261.00
19	74.00	90.00	115.00	146.00	237.00	132.00	118.00	272.00
20	76.00	92.00	118.00	151.00	244.00	136.00	122.00	283.00
21	78.00	95.00	121.00	156.00	251.00	139.00	126.00	292.00
22	80.00	97.00	125.00	161.00	259.00	143.00	130.00	301.00
23	82.00	100.00	128.00	166.00	266.00	147.00	134.00	308.00
24	85.00	103.00	132.00	171.00	274.00	151.00	138.00	315.00
25	87.00	105.00	135.00	176.00	281.00	155.00	142.00	323.00
26	89.00	108.00	138.00	181.00	289.00	159.00	146.00	330.00
27	91.00	110.00	142.00	185.00	296.00	163.00	150.00	337.00
28	93.00	113.00	145.00	190.00	304.00	167.00	153.00	345.00
29	95.00	115.00	148.00	195.00	311.00	171.00	157.00	352.00
30	98.00	119.00	153.00	202.00	322.00	177.00	163.00	363.00
31	100.00	122.00	157.00	207.00	329.00	181.00	167.00	371.00
32	102.00	124.00	160.00	212.00	337.00	185.00	171.00	378.00
33	104.00	126.00	164.00	217.00	344.00	189.00	175.00	386.00
34	107.00	127.00	167.00	222.00	352.00	193.00	179.00	393.00
35	109.00	129.00	170.00	227.00	360.00	197.00	183.00	401.00
36	111.00	131.00	174.00	231.00	367.00	201.00	187.00	408.00
37	113.00	133.00	177.00	236.00	375.00	205.00	191.00	416.00

Weight not over (lbs.)	Rate group							
	1	2	3	4	5	6	7	8
38	115.00	135.00	181.00	241.00	382.00	209.00	195.00	423.00
39	117.00	137.00	184.00	246.00	389.00	213.00	199.00	430.00
40	119.00	139.00	187.00	251.00	395.00	217.00	203.00	438.00
41	121.00	141.00	191.00	256.00	402.00	221.00	207.00	445.00
42	125.00	143.00	194.00	261.00	409.00	225.00	211.00	453.00
43	127.00	145.00	198.00	266.00	416.00	229.00	215.00	460.00
44	129.00	146.00	201.00	271.00	423.00	233.00	219.00	468.00
45	132.00	148.00	205.00	275.00	430.00	237.00	223.00	475.00
46	134.00	150.00	208.00	280.00	437.00	241.00	227.00	482.00
47	136.00	151.00	211.00	285.00	443.00	245.00	231.00	490.00
48	138.00	153.00	215.00	290.00	450.00	249.00	235.00	497.00
49	141.00	155.00	218.00	295.00	457.00	253.00	239.00	505.00
50	143.00	158.00	224.00	303.00	469.00	259.00	245.00	518.00
51	147.00	160.00	227.00	308.00	476.00	259.00	249.00	533.00
52	149.00	160.00	231.00	313.00	483.00	267.00	253.00	533.00
53	151.00	164.00	234.00	318.00	490.00	271.00	257.00	549.00
54	154.00	164.00	238.00	323.00	497.00	275.00	261.00	549.00
55	155.00	167.00	241.00	328.00	504.00	278.00	265.00	562.00
56	157.00	167.00	245.00	333.00	511.00	283.00	270.00	562.00
57	157.00	170.00	248.00	338.00	518.00	286.00	274.00	574.00
58	157.00	170.00	251.00	343.00	524.00	291.00	278.00	574.00
59	157.00	173.00	255.00	348.00	531.00	294.00	282.00	587.00
60	157.00	173.00	258.00	353.00	538.00	299.00	285.00	587.00
61	164.00	176.00	262.00	358.00	545.00	302.00	290.00	602.00
62	165.00	176.00	265.00	362.00	551.00	308.00	292.00	602.00
63	167.00	179.00	269.00	367.00	559.00	310.00	298.00	617.00
64	168.00	179.00	272.00	372.00	562.00	316.00	298.00	617.00
65	169.00	182.00	276.00	377.00	573.00	318.00	305.00	632.00
66	169.00	182.00	279.00	382.00	573.00	324.00	305.00	632.00
67	169.00	186.00	282.00	387.00	584.00	326.00	313.00	647.00
68	169.00	186.00	286.00	392.00	584.00	332.00	313.00	647.00
69	169.00	189.00	289.00	397.00	595.00	334.00	320.00	662.00
70	169.00	189.00	293.00	402.00	595.00	340.00	320.00	662.00

215.63 Optional Insurance Fees

Priority Mail Global Guaranteed rates include document reconstruction insurance of $100. Additional document reconstruction insurance, not to exceed $2,499, can be purchased at the time of mailing. The fees are:

Insurance amount—(in dollars)	Fee
100	No fee
200	0.70
300	1.40
400	2.10
500[1]	2.80

[1] For document reconstruction insurance coverage above $500, add $0.70 per $100 or fraction thereof, up to a maximum of $2,499 per shipment. $2,499 (maximum)—$16.80.

* * * * *

[The Individual Country Listings in the International Mail Manual will be revised to reflect the availability of Priority Mail Global Guaranteed service and the applicable postage rates.]

Stanley F. Mires,

Chief Counsel, Legislative.

[FR Doc. 00–21856 Filed 8–25–00; 8:45 am]

BILLING CODE 7710–12–P

ENVIRONMENTAL PROTECTION AGENCY

40 CFR Part 52

[GA54—200025; FRL–6858–8]

Approval and Promulgation of Implementation Plans Georgia: Approval of Revisions for a Transportation Control Measure

AGENCY: Environmental Protection Agency (EPA).

ACTION: Final rule.

SUMMARY: EPA is approving revisions to the Georgia State Implementation Plan (SIP) for the Atlantic Steel Transportation Control Measure (TCM) submitted by the State through the Department of Natural Resources on March 29, 2000, and revised and resubmitted on August 1, 2000.

EFFECTIVE DATE: This rule will be effective September 27, 2000.

ADDRESSES: Materials relevant to this rulemaking are contained in Docket No. GA54–200025. The docket is available at the following address for inspection during normal business hours: Environmental Protection Agency, Region 4, Air Planning Branch, 61 Forsyth Street, SW, Atlanta, Georgia 30303–8960. Contact Dr. Robert W. Goodwin at 404/562–9044.

FOR FURTHER INFORMATION CONTACT: Dr. Robert W. Goodwin at 404/562–9044, E-mail: *Goodwin.Robert@epa.gov.*

Information regarding Project XL and the Atlantic Steel Final Project Agreement is available via the Internet at the following location: ''http://www.epa.gov/ProjectXL''.

SUPPLEMENTARY INFORMATION:

I. Background

Today's action finalizes EPA's approval of the Atlantic Steel TCM into the Georgia SIP. A detailed description of the Atlantic Steel TCM may be found in the Notice of Proposed Rulemaking for today's action, which was published in the **Federal Register** on April 10, 2000 (65 FR 18947). The proposal's comment period ended May 10, 2000. In addition, EPA and the Georgia Department of Transportation (GDOT) held a public information meeting (PIM) on April 18, 2000, to provide updates on the proposed 17th Street bridge and Atlantic Steel redevelopment projects, and to provide an opportunity for public comment. EPA received one comment letter during the comment period from the Ansley Park Civic Association

(APCA) dated May 10, 2000, and one comment letter after the comment period closed from the Georgia Sierra Club Challenge to Sprawl Campaign dated May 16, 2000. EPA also received several individual comments at the PIM regarding the proposed TCM. Copies of the comments in their entirety may be obtained from the docket for this rule (see **ADDRESSES**).

The City of Atlanta (sponsor of the TCM), Jacoby Atlantic Redevelopment (hereafter referred to as ''the developer''), and EPA collaborated to develop minor revisions to the TCM. The City submitted the revisions to the Georgia Environmental Protection Division (EPD) on July 27, 2000, and EPD submitted the SIP revisions to EPA on August 1, 2000. EPA believes that the revisions help address concerns raised by commenters and strengthens the potential for superior environmental performance of the TCM. The revisions are described in detail in EPA's response to comments below.

II. Response to Comments

1. *Comment:* ''Appropriate measures should be taken to protect surrounding neighborhoods from adverse traffic and air quality impacts generated by the Atlantic Steel development.''

Response: EPA, in cooperation with the Federal Highway Administration and the Federal Transit Administration, has completed an Environmental Assessment (EA) of the Atlantic Steel redevelopment and 17th Street bridge and associated interchange and roadway modifications. The EA has been prepared in accordance with the National Environmental Policy Act of 1969 (NEPA) as amended; EPA's ''Policy and Procedures for Voluntary Preparation of NEPA Documents'' (63 FR 58045), generally following the procedures set out at 40 Code of Federal Regulations (CFR) Part 6, Subparts A through D; and the United States Department of Transportation's ''Environmental Impact and Related Procedures'' (23 CFR 771). The EA provides a summary of planning efforts associated with the development of concept alternatives, traffic studies, preliminary engineering analysis, and environmental impact assessments, all of which have been completed with opportunities for public comment and agency coordination, as part of the NEPA process as well as EPA's Project XL. The EA describes the potential impacts to existing environmental conditions in the study area, which includes the surrounding neighborhoods, as a result of the proposed 17th Street extension and Atlantic Steel redevelopment. The description of impacts focuses on the resources most affected by the proposed action, including localized traffic and air quality impacts, and mitigative measures are proposed where appropriate.

Regarding traffic impacts on surrounding neighborhoods generated by the Atlantic Steel redevelopment, Atlantic Steel zoning condition #4 requires the developer to work with the City of Atlanta and Home Park to limit cut-through traffic on residential streets perpendicular to and south of 16th Street by means of cul-de-sacs, speed humps, gates, control arms, and other traffic-calming devices, and to work with the City of Atlanta and Loring Heights neighborhood to limit cut-through traffic on Bishop Street. In addition, EPA Region 4 has drafted and is coordinating a Memorandum of Understanding (MOU) between EPA, the City of Atlanta, GDOT, the Georgia Regional Transportation Authority, and the developer which seeks the concurrence of the Midtown Alliance, APCA, the Home Park Community Improvement Association, and the Loring Heights Neighborhood Association to establish a community-based planning process to collect specific data on future trips associated with the redevelopment of the Atlantic Steel site and other projects in Midtown Atlanta in order to study the magnitude and cumulative effects of traffic in the neighborhoods and develop and implement means of minimizing these impacts.

Regarding air quality impacts on surrounding neighborhoods generated by the Atlantic Steel redevelopment, EPA performed a carbon monoxide (CO) hotspot analysis, which is included in the docket for this rulemaking, and concluded that the Atlantic Steel redevelopment and associated roadway improvements would be extremely unlikely to create a localized violation of the National Ambient Air Quality Standards (NAAQS) for CO in the foreseeable future. In addition, EPA performed a regional emissions analysis, which is included in the docket for this rulemaking, and concluded that the Atlantic Steel redevelopment would produce fewer transportation-related emissions of volatile organic compounds and oxides of nitrogen, precursors to ground-level ozone formation, than a comparable amount of development built at other likely locations in the Atlanta region.

In addition, the Atlantic Steel TCM contains four site design criteria and four performance targets which will collectively help ensure both that the redevelopment is designed and built with elements that encourage alternatives to single-occupancy automobile trips, and also that the project will perform up to its potential to lower vehicle-miles traveled and concomitant emissions. EPA believes that the EA, zoning conditions, MOU, localized and regional emissions studies, and site design criteria and performance targets identify and establish appropriate measures to protect surrounding neighborhoods from adverse traffic and air quality impacts generated by the Atlantic Steel redevelopment.

2. *Comment:* ''The TCM Document freely acknowledges that this project could not go forward under existing statutory and regulatory requirements. Only because EPA has adopted Project XL which appears to be an exception to the legal regime within which EPA must operate is the project even being considered.''

Response: EPA disagrees with this comment. There is no statutory or regulatory requirement that would prevent the Atlantic Steel project from being considered a TCM in the absence of Project XL. It is clear that by creating an illustrative list of potential TCMs in the Clean Air Act (CAA) that Congress intended that EPA should have the discretion to identify other types of TCMs than those listed in 42 United States Code (U.S.C.) Sections 7408(f)(1)(A)(i)-(xvi). In fact, as EPA pointed out in the proposed rulemaking, there are many individual components of this project that could be considered TCMs as defined by the CAA and EPA's Transportation Conformity Rule (40 CFR 93.101), including the bike and transit lanes on the proposed 17th Street bridge. The Atlantic Steel project is the first of its kind to combine these components, including site design and location, together as a TCM. In addition, EPA has traditionally relied on a ''build/no-build'' analysis to estimate the emissions benefits of proposed TCMs, *i.e.*, the emission reduction benefits would be estimated by comparing projected transportation-related emissions if the project is built to those if the project isn't built. However, EPA does not believe the traditional build/no-build analysis is appropriate for the Atlantic Steel TCM because the traditional no-build analysis would not take into account the probability and location of development that will occur in the absence of the Atlantic Steel redevelopment.

Therefore, EPA is using the flexibility of Project XL for two reasons: (1) to view the redevelopment and associated transportation elements, including the bridge, together as a TCM; and (2) to

estimate the air quality benefit of the Atlantic Steel redevelopment relative to an equivalent amount of development at other likely sites in the region. EPA believes that this emissions analysis is appropriate for the Atlantic Steel project because EPA expects that the Atlanta region will continue to grow, and that at least part of the development represented by the Atlantic Steel project would be built at other potential sites in the region, if the Atlantic Steel TCM were not approved.

EPA would like to clarify that it is only the 17th Street bridge and associated interchange modifications that could probably not proceed under existing Federal statutory and regulatory requirements during a transportation conformity lapse. Certainly, redevelopment of the Atlantic Steel site could proceed without Federal action. The City's zoning conditions require construction of the 17th Street bridge, and it is the 17th Street bridge and interchange modifications that require Federal action. However, without the bridge, the land would likely be re-zoned and redeveloped with a different design and mix of uses than what is currently proposed. The revised design would likely be much less transit and pedestrian-oriented and would not benefit from a direct connection to the Metropolitan Atlanta Rapid Transit Authority (MARTA) Arts Center station afforded by the bridge. EPA therefore believes that, in the absence of the 17th Street bridge with the direct transit connection to the MARTA Arts Center station, the potential air quality benefits of the resulting redevelopment would be less than the current proposal.

In addition, if the Atlantic Steel redevelopment and 17th Street bridge are not approved together as a TCM, the 17th Street bridge could still be approved separately after the transportation conformity lapse in Atlanta has been lifted, and many of the features of the redevelopment as described under Project XL would likely be lost. In an April 24, 2000, letter from the City of Atlanta to EPA, Commissioner Michael A. Dobbins wrote that in that case ''[the City] would expect the site to be developed * * * in pieces where it would be improbable that an overarching vision of a cohesive 'village' or 'town' would emerge. Transit linkages, and thus usage, would not be likely nor even to a large extent, possible. * * * In addition, other internal connections, like pedestrian continuity or provision of continuous streetscapes and usable green space would be problematic.'' Furthermore, ''components would be built as a series of single-use developments rather than comprehensively. As a consequence, the opportunities for intermixing these uses would be limited. Adjacent land uses probably would be less compatible and not as mutually supportive. Parking would be built on a per site needs basis with less opportunity for shared or coordinated parking strategies, resulting in more parking spaces overall.''

EPA, through Project XL, worked with the developer and a well-known urban design planner to improve the initial site design. Without Project XL, and ultimately the TCM, EPA and other stakeholders would not have had as great an impact on the pedestrian/transit orientation of the project. The Project XL process provided many opportunities for community input. Stakeholder involvement in the regulatory process is typically much more limited than that provided through the Project XL and TCM processes.

In this project, the use of flexibility to allow a major downtown redevelopment with associated transportation improvements to proceed during a conformity lapse raises complex legal, policy, and scientific issues and uncertainties. These issues and uncertainties will require extensive post-implementation analysis before EPA can determine whether such flexibility can or should be offered to other entities in the future. Therefore, as with all XL projects, the flexibility granted in connection with the approval of this SIP revision, in and of itself, establishes no precedent with regard to other redevelopment projects.

3. *Comment:* ''We believe that because the Atlantic Steel redevelopment and related roadway construction (the 'Atlantic Steel Project') admittedly is deficient under EPA's existing requirements for designation as a TCM, the Atlantic Steel Project must be subjected to a greater level of scrutiny to determine whether it is an appropriate exercise of EPA authority.''

Response: In the proposed rulemaking, EPA identified six criteria established by EPA policy (''Transportation Control Measures: State Implementation Plan Guidance,'' U.S. EPA Office of Air Quality Planning and Standards, September 1990) that a proposed TCM must satisfy before it may be considered for inclusion in the SIP. The proposed rulemaking also contained detailed explanations of how the proposed Atlantic Steel TCM satisfied EPA's criteria. EPA has no statutory or regulatory responsibility to subject the Atlantic Steel TCM to a greater level of scrutiny than any other TCM. Nevertheless, it is the opinion of EPA that the Atlantic Steel TCM has indeed been subject to intense scrutiny, particularly in terms of satisfying EPA's six TCM criteria.

4. *Comment:* ''The TCM Document does not cite any legal authority permitting EPA to adopt Project XL.''

Response: EPA is approving the Atlantic Steel TCM into the Georgia SIP under the authority of sections 108(f) and 110 of the CAA. In Project XL, the EPA and state regulators utilize tools under existing statutory authority to provide appropriate flexibility from otherwise applicable regulatory requirements. As explained in the proposed rulemaking, EPA is approving the redevelopment as a TCM because its location, transit linkage, site design, and other transportation elements together comprise a measure for the purpose of reducing emissions or concentrations of air pollutants from transportation sources by reducing vehicle use or changing traffic flow or congestion conditions. In addition, the redevelopment includes specific elements listed in section 108(f). Under section 110 of the CAA, EPA approves measures into the SIP that contribute to attainment of the NAAQS.

5. *Comment:* ''To approve the Atlantic Steel TCM, EPA must at a minimum ensure that it does not produce local pollution problems while reducing regional emissions, including carbon monoxide (CO) hot spots.''

Response: EPA voluntarily undertook a CO hotspot analysis for the Atlantic Steel TCM and concluded that it would be extremely unlikely to create a violation of the NAAQS for CO in the foreseeable future. This type of analysis is required by EPA's Transportation Conformity Rule (40 CFR 93 Subpart A) only in CO and PM_{10} (particles with an aerodynamic diameter less than or equal to a nominal 10 micrometers) nonattainment and maintenance areas (40 CFR 93.116). EPA has designated Atlanta attainment under the NAAQS for CO and PM_{10}.

6. *Comment:* ''The CO local hotspot analysis is flawed and must be recomputed using accurate forecasts of travel demand behavior in the Midtown area. Consultants hired by EPA performed a CO impact assessment of the Atlantic Steel Project and concluded that 'the project is extremely unlikely to create a violation of ambient air quality standards for carbon monoxide in the foreseeable future.' The CO Report indicates that it used data input files from a variety of sources, including the Atlanta Regional Commission's (ARC) TRANPLAN regional travel demand model. The ARC TRANPLAN model, however, projects that from 2000–10 Midtown will grow by 4,528 jobs and 193 residents. These projections are

fundamentally unsound. There is in excess of 4 million square feet of office space and 1,398 residential units currently under construction with another 892,700 square feet of office space and 1,243 residential units proposed for the Midtown area. When completed, this space could accommodate more than 17,000 office employees and 1,700 residents [assuming one employee per 300 square foot of office space and 1.5 residents per residential unit]. By materially underestimating population and job growth in the Midtown area, TRANPLAN necessarily materially underestimates key information including, traffic volume and traffic congestion, required for the calculation of local CO emissions. The CO hotspot analysis is therefore fatally flawed and cannot support the conclusion that the Atlantic Steel Project will not produce any CO hotspots. Further analysis of the CO impacts of the Atlantic Steel Project is required before approval of the Atlantic Steel TCM may be granted.''

Response: The traffic volume projections for the year 2025 used in the Atlantic Steel CO hotspot analysis consisted of two parts: (1) ''Background'' traffic that would exist regardless of whether Atlantic Steel is redeveloped, and (2) additional traffic generated by the redevelopment. The commenter is concerned that the background traffic volumes for Midtown were underestimated due to perceived deficiencies in ARC's regional travel demand model. However, ARC's travel demand model was not used to generate the background or the redevelopment-related traffic volumes in the CO hotspot analysis. ARC's travel model was used only to predict the origin and destinations and distribution of trips in the study area, not the total number of trips. The 2025 background traffic volumes were generated by growing 1998 observed surface street traffic volumes by 2 percent per year and observed freeway traffic volumes by 1.5 percent per year. This is equivalent to a 71 percent increase in surface street traffic volumes and a 49 percent increase in freeway traffic volumes in Midtown between 1998 and 2025. The 2025 Atlantic Steel-related traffic volumes were based on Institute of Transportation Engineers (ITE) trip generation equations applied to the Atlantic Steel redevelopment build-out projections, reduced by 10 percent to account for internal capture and 15 percent for transit.

In addition, the CO hotspot analysis was conservative in that it considered conditions most likely to produce CO hotspots in terms of meteorology, traffic congestion, and receptor location. Furthermore, the CO hotspot analysis was completed before EPA finalized its Tier 2 tailpipe emissions and gasoline sulfur standards, which should reduce future motor vehicle CO emission rates below those assumed in the CO hotspot analysis.

7. *Comment:* ''The travel and emissions analysis presented in the Hagler Bailly Report is inaccurate and unreliable. The travel and emissions analysis relies on inaccurate population and employment projections for the Midtown area. The Hagler Bailly Report purports that the Atlantic Steel Project performs better from a regional perspective both in terms of vehicle-miles traveled (VMT) and mobile source emissions when compared to a similar development located elsewhere in the metropolitan region. In calculating regional emissions, the Hagler Bailly Report indicates that they used the ARC regional transportation model TRANPLAN. This 'models behavior given the population and employment projected and distributed for year 2015.' However, ARC projects that Midtown Atlanta will add only 4,528 jobs and 193 residents between 2000 and 2010 (see Hagler Bailly Report at p. 7), which projections obviously and dramatically underestimate population and employment growth in the Midtown area, as discussed above. By materially underestimating population and employment growth in the Midtown area, the model necessarily underestimates key information used to calculate air quality emissions arising from the Atlantic Steel Project, including number of trips, traffic volumes and traffic speeds. The model output and the resulting comparative analysis of the travel and emissions projections for the Atlantic Steel site and alternative regional sites are therefore inaccurate and unreliable. Based on such materially flawed estimates, no rational administrative body can conclude that the Atlantic Steel Project produces the necessary air quality benefits to qualify for inclusion as a TCM in the State of Georgia State Implementation Plan.''

Response: EPA utilized ARC's travel demand model to perform a comparative analysis of projected VMT and associated emissions generated by the proposed Atlantic Steel redevelopment and three other hypothetical developments of similar magnitude at other likely sites in the Atlanta region. The study analyzed the differences in regionwide VMT and emissions between the four scenarios. The effects of any inaccuracies in the Midtown population and employment growth assumptions in the ARC travel demand model would be present in all four scenarios and would probably tend to cancel each other to a certain extent in the comparative analysis.

There is no reason to expect that using lower-than-expected background Midtown growth would bias the analysis in favor of the Atlantic Steel site. Rather, if Midtown grows faster than forecast, one would expect the regional travel and emissions benefits of the Atlantic Steel redevelopment to be even greater than forecast. The principal measure of the Atlantic Steel project's potential for reducing future transportation-related emissions is the reduction in VMT compared to the other scenarios. VMT, in turn, is predominantly a function of proximity to other origins and destinations. It is likely that if the Midtown employment and population estimates had been higher in ARC's model, given the relatively short travel distances and high transit and pedestrian accessibility between the Atlantic Steel project and Midtown, then the performance of Atlantic Steel Project would have been even better compared to the other scenarios in terms of its potential to reduce VMT and concomitant emissions.

EPA would also like to clarify that ARC is the officially designated Metropolitan Planning Organization for the Atlanta region per 23 U.S.C. 134 and section 8 of the Federal Transit Act, and ARC is therefore responsible for developing population and employment forecasts for use in transportation and other planning activities for the region. As such, the population and employment growth forecasts contained in the ARC travel demand model for Midtown represented the most recent and best data available to EPA at the time of EPA's Atlantic Steel regional emissions analysis.

8. *Comment:* ''The transit usage percentage assumptions used in the Hagler Bailly Report are unsupported and unreliable. The Hagler Bailly Report assumed a 37% transit share for the project (27.07% work and 10.68% non-work, see p. 24). We have explained why that analysis is unsupported in our letter to Mr. Ben West at EPA dated April 26, 2000, and refer you to that letter, a copy of which is enclosed for your information. The transit share assumptions presented by Hagler Bailly are not supported. Since transit travel reduces VMT for a site, the size of the transit share assumption is a material component of the input data to the MOBILE5a model used by Hagler Bailly to calculate the projected emissions from the Atlantic Steel Project and

similar development at alternative regional locations. Hagler Bailly assumed that transit share was greatest at the Atlantic Steel site (37%), compared to 18.5% at the Perimeter/Sandy Springs site, 2.6% at the Fulton/Cobb site and no transit at the Henry County site. The Hagler Bailly Report purports that locating development at the Atlantic Steel site produces significant regional emissions benefits compared to locating the development at the alternative regional locations chosen based on the output of the MOBILE5a modeling (see Figure 6) using the above transit share input data.''

Response: The transit shares in the regional emissions analysis were not assumed *a priori,* but rather they resulted from calculated forecasts using ARC's travel demand model. The model calculated a 27 percent transit share for work-related trips and a 10 percent share for non-work trips. With respect to the assumptions used in the modeling, the model is based on travel surveys and calibrated to travel behavior in the Atlanta region. The model is the same one that is used for regulatory submissions for the Atlanta region. EPA can provide a full set of model documentation upon request.

In addition, it is mathematically improper to add the two transit share numbers to obtain a total transit share. Because work trips are only around a quarter of the trips associated with the site, a weighted average is needed to obtain a total transit share of all trips. Such a calculation would yield something between 10 percent and 27 percent, with a result likely around 15 percent.

EPA responds to the specific points regarding the Hagler Bailly transit usage percentage assumptions raised in APCA's April 26, 2000, letter to Mr. Ben West in response to comment #9 below.

9. *Comment:* ''[The Hagler Bailly] study contains a chart (p. 23) stating that it estimated 27% of work-related trips and 11% of non-work related trips would be made by transit. The study explains those estimates as based on the Atlanta Regional Commission's transportation model (the 'ARC model'). However, the Hagler Bailly study does not explain the assumptions plugged into the ARC model which resulted in the 27%/11% figures. Nor does the Concept Report. Moreover, Hagler Bailly estimated a regional average of 8% for work-related trips and 2% for non-work related trips. Thus, the ARC model estimated that transit use for Atlantic Steel would be 300% to 500% higher than the regional average, a dramatic difference which illustrates the importance of the failure to explain the 27%/11% estimates. Finally, the Hagler Bailly study acknowledged that the use of the ARC model included undefined 'selective judgments' and that the ARC model usage was compromised insofar as the consultants lacked 'information about households' in the affected areas and they were forced to use 'regional average' socioeconomic data instead. Thus, the Concept Report provides no information, much less evidence, to support Hagler Bailly's use of the ARC model to arrive at the assumption of 27%/11% transit use. Therefore, the Hagler Bailly study presents no basis upon which a rational administrative decision could be predicated.''

Response: EPA developed limited inputs to ARC's travel demand model in order to include the Atlantic Steel project in the regional emissions analysis. The inputs were specific to the project and were confined to the traffic analysis zones in which the development would be located. The inputs included: the total number of residents and employees; households stratified by income and number of occupants; the highway network link(s) representing the 17th Street bridge; and the transit network link(s) representing the transit service. EPA did not alter ARC's inputs for the socioeconomic data and transportation network for the remainder of the Atlanta region, or the variables internal to the model which describe travel behavior (e.g., trip generation rates, mode choice model).

EPA assumed that the Atlantic Steel project would accommodate 6,000 residents and 17,483 employees by the year 2015 (page 45 of the Hagler Bailly study). Due to variability in forecasts of the socioeconomic characteristics of the households in the redevelopment, EPA chose to use regional averages to distribute the 6,000 residents into households by income and number of residents per household. EPA would like to clarify that this assumption was used only for the Atlantic Steel redevelopment, and not for households in surrounding areas, for which the ARC inputs were used. EPA believes that this was a reasonable assumption for the purposes of the study. EPA consulted with the developer in order to classify the 17,483 employees by employment type (*e.g.,* construction, manufacturing, retail, service) based on forecasted uses of the site. 17th Street was modeled with two general purpose lanes in each direction and one high-occupancy vehicle (HOV)/transit lane in each direction stretching from Northside Drive to the west of the Atlantic Steel site through the site and bridging Interstate-75/85 to Spring, West Peachtree, and Peachtree Streets to the east. It also included (general purpose) connections from Interstate-75/85. The transit service was modeled as a bus route connecting the site and the MARTA Arts Center station, operating 10 hours a day at 15 minute headways (time between buses), free of charge. EPA would like to point out that the developer has committed in the TCM to providing bus service which complements the hours of service and headways of the trains serving the MARTA Arts Center station. Currently, this means that the bus service would operate 18.5 to 20 hours per day at four to eight minute headways. All of these assumptions are contained in the docket for this rulemaking.

EPA executed ARC's travel demand model using the inputs described above, and the model predicted that 11 percent of non-work related trips associated with the Atlantic Steel redevelopment, and 27 percent of the work-related trips would take transit. Spot checks of transit mode splits predicted by ARC's model for areas surrounding the Atlantic Steel site were made and were found to be consistent with the predictions for the redevelopment. Furthermore, it is likely that the predicted transit mode splits for the Atlantic Steel redevelopment would have been even higher if the transit service had been modeled using the longer hours of service and shorter headways contained in the TCM. Finally, the reason the regional average transit mode share is much lower (8 percent for work-related trips and 2 percent for non-work-related trips) is because it includes a significant number of areas that lack reasonable walk or drive access to transit, which lowers the average.

10. *Comment:* ''In addition, the Hagler Bailly analysis assumes the existence of transit service for the entire period tested even though transit service is required to be provided only for a period of 10 years after the 17th Street bridge opens to traffic.''

Response: The Atlantic Steel TCM has been revised to include a commitment by the developer to provide the rubber-tired shuttle service for ten years from the date that the 17th Street bridge opens to traffic or until December 31, 2015, whichever is longer. The developer's obligation will cease if, during the period of obligation, an appropriate entity operates a fixed mass transit link providing a similar level of service. The commitment in the TCM is now consistent with the transit connection modeled in the regional emissions analysis.

11. *Comment:* ''The critical finding of the TCM Document is based on that flawed analysis. Specifically, ''that the Atlanta region will continue to grow, and that redevelopment of the Atlantic Steel site will produce fewer air pollution emissions than an equivalent quantity of development that likely would occur at other potential sites in the region, if the Atlantic Steel redevelopment were not to occur.''

Response: EPA believes that the findings of the regional emissions analysis are sufficient. First, based on historical trends and current projections it is reasonable to assume that the Atlanta region will continue to grow. According to ARC, since 1970 the population of the Atlanta region has more than doubled, and ARC projects that it will continue to grow by another 42 percent by the year 2025. Second, based on historical trends and current projections it is reasonable to assume that some fraction of the development represented by the Atlantic Steel redevelopment would locate outside of the urban core if it is not built at the Atlantic Steel site. According to ARC, while the regional population more than doubled since 1970, the population of the City of Atlanta, located at the core of the region, declined by roughly 14 percent. In addition, since 1980, only 3 percent of the growth in jobs has occurred in the core. According to ARC projections, between 2000 and 2025, 90 percent of new residents and 80 percent of new jobs in the region are expected to locate outside the City of Atlanta. Finally, EPA believes that it is reasonable to conclude that a high density, mixed-use development, centrally located in the urban core and designed with high transit and pedestrian accessibility would create less VMT and concomitant emissions than a comparable development at a less regionally central, less transit and pedestrian accessible location.

12. *Comment:* ''The unsupported transit share input data, together with the unwarranted assumption of continuous transit service for the period tested, invalidates the model output. Therefore, the Hagler Bailly comparison of projected emissions at the Atlantic Steel site and development at an alternative regional location (see Hagler Bailly Report at Figure 6, p. 21) does not present a rational basis for the above-quoted finding in the TCM Document and thus cannot support an administrative decision that the Atlantic Steel Project qualifies as a TCM for inclusion in the State of Georgia SIP.''

Response: EPA explained in the responses to comments #8 and #9 that the transit share data are outputs of the model and not input data, and that the developer has committed to supply the shuttle bus through the period considered in the regional emissions analysis.

13. *Comment:* ''There is insufficient evidence that funding has been (or will be) obligated to implement the measure. EPA indicates that this is one of the six criteria required to be satisfied before designation of a measure as a TCM. While identifying the source of funding of all related construction costs for the Atlantic Steel TCM, the TCM Document fails to identify a source of funding to ensure that all performance targets are met. The TCM Document provides that if the performance targets for the project are not met, the developer must identify funding or fund a Transportation Management Association (TMA) for 20 years, if employers and property managers are not already participating in one. It is presently anticipated that employers and property managers will participate in the TMA being set up for the Midtown business district. As presently proposed, no further obligation to ensure compliance with the performance targets is imposed on the developer once initial funding for the TMA has been identified. Thereafter, the City of Atlanta, not the developer, must ensure that the performance targets are met at each evaluation period. The TCM fails to identify a source of funding for the obligations imposed on the City of Atlanta to monitor the effectiveness of the Atlantic Steel TCM and to take additional measures to ensure performance targets are met. These additional measures could include providing increased transit service or undertaking traffic calming measures involving construction on city streets, the costs of which are not discussed or identified. Neither the City of Atlanta Transportation Impact Fee Ordinance nor the Atlantic Steel Brownfield Area and Tax Allocation District Number Two, both identified as sources of funding for construction costs relating to the Atlantic Steel Project, contemplate use of such funds to provide transit service at the site or other measures to ensure TCM performance targets are met. To satisfy this EPA criterion for designation of the Atlantic Steel Project as a TCM, both the amount of funds that could reasonably be anticipated to meet these additional obligations and a source of such funds must be identified. This is particularly critical given the limited obligation to maintain transit at the site currently contemplated in the TCM Document.''

Response: Regarding a source of funding for the obligations imposed on the City of Atlanta to monitor the effectiveness of the Atlantic Steel TCM, the developer has committed to monitoring and collecting the travel behavior data along with the City of Atlanta. This commitment includes funding. The Atlantic Steel TCM has been revised to include this commitment.

EPA disagrees that the TCM must identify the amount and source of funds for as yet undetermined additional future strategies that might be necessary to meet the performance targets contained in the TCM. It is not possible to predict every possible outcome of the implementation of the Atlantic Steel TCM, however EPA believes that the mechanisms contained in the TCM are sufficient to ensure that the project will be monitored and potential problems will be identified and addressed as needed.

EPA believes that the TCM performance targets will be met without any additional strategies. As a safeguard, the TCM includes both a monitoring program to assess whether the targets have been met and a commitment by the City of Atlanta to fund or identify funding for any additional strategies needed to meet the targets. The scope, design, and costs of any potential additional strategies will depend on the nature of the transportation problem(s) and on the associated travel behavior. The monitoring program for the Atlantic Steel TCM has been designed to collect the data that will form the basis for any additional strategies needed to meet the performance targets in the TCM. If and when the project fails to meet one or more of the performance targets in the TCM, it will be the federally-enforceable responsibility of the City of Atlanta, as sponsor of the Atlantic Steel TCM, to either identify the funding source(s) or fund the strategies necessary to meet the performance targets contained in the TCM.

14. *Comment:* ''The monitoring program to assess the measure's effectiveness and to allow for necessary in-place corrections or alterations fails to include important and necessary elements. Site design criteria are insufficient because they omit a standard for traffic speeds in the development and a standard for pedestrian route directness. In the discussion of the relative merits of the three site designs analyzed, the TCM Document indicates that the Jacoby redesign and the Duany Plater-Zyberk & Co. (DPZ) design excel when compared to the original Jacoby design for three reasons. The site design criteria included in the TCM Document already

reflects two of those reasons but fails to include the third which is that 'the pedestrian environment is improved through street design that includes more direct routing and slower traffic speeds.' Since EPA itself considers traffic speeds and pedestrian route directness important and because the City of Atlanta zoning conditions do not address these issues, they should be included as additional site design criteria in the TCM Document with appropriate targets.''

Response: EPA believes that the site design criterion entitled ''External Street Connectivity,'' which requires the average distance between site ingress/egress streets to be less than or equal to 1,000 feet, serves as a surrogate for pedestrian route directness that is simpler to monitor and enforce. This criterion will ensure that the street network and associated sidewalks and bike paths in the redevelopment will be well integrated into the existing fabric of the surrounding neighborhoods, thereby enhancing pedestrian route directness. In addition, the original site plan, particularly the west side, was altered based on the DPZ design to better frame the pedestrian areas by creating clear progressions of pedestrian-oriented uses. Pedestrian-oriented retail has been added to the west side along 16th Street and around a public plaza at the heart of the technology park (as depicted in the original design), now a reconfigured and newly defined ''Tech Village.'' Independent of the defined pedestrian route system along the community's streets, a secondary pedestrian route system is defined through a series of parks and plazas, not only linking the various uses within the redevelopment, but also linking the adjoining neighborhood to the south.

In terms of traffic speeds, the external street connectivity criterion should also result in intersections that are spaced more closely together, which will have an inherent traffic calming effect. In addition, the developer incorporated site design recommendations made by DPZ that will reduce speeds. For example, to address the issue of high-speed geometries, block sizes were reduced and the road network was reconfigured to parallel the existing urban grid system. Building setbacks were eliminated where possible. In many cases, buildings start at the right-of-way line. Furthermore, on-street parking is a traffic calming device that is integral to an urban pedestrian streetscape, and the developer has committed in the XL Final Project Agreement to pursue on-street parking on all streets other than 17th Street within the development. 17th Street is the exception because initial discussions with GDOT and traffic engineers have identified the area around the lake and park as the only appropriate section of 17th Street to accommodate on-street parking.

For these reasons, EPA believes that it is unnecessary to include detailed standards for traffic speeds and pedestrian route directness in the TCM.

15. *Comment:* ''The proposed method of evaluation of the development as a transportation control measure is insufficient. Evaluation of the Atlantic Steel Project as a transportation control measure occurs 2, 3½, and 5 years after the 17th Street bridge opens to traffic. At these intervals, VMT per resident, VMT per employee and mode split will be examined. The TCM Document imposes no further obligation on the developer if VMT per resident or VMT per employee is equal to or lower than the regional average or if the modal split is greater than or equal to the regional average. The Atlanta regional VMT averages are presently among the highest in the nation and the modal split is below 8%. EPA has granted flexibility for this development under Project XL precisely because the project is expected to generate fewer vehicle miles of travel. Including targets that are merely equal to the regional averages is inconsistent with the justification provided by EPA for designation of the Atlantic Steel Project as a TCM. These evaluations should have average VMT for residents and employees that are lower than regional averages and decline gradually at each successive evaluation and a modal split target greater than regional averages and gradually increasing at each successive evaluation to justify the flexibility granted for the Atlantic Steel Project.''

Response: EPA would like to clarify that monitoring of the TCM will start when the 17th Street bridge opens to traffic and will continue on an annual basis until ten years following redesignation by EPA of the Atlanta area to attainment under the NAAQS for ozone. In addition, the TCM will be evaluated by the City of Atlanta, EPD, and EPA using performance targets defined in the TCM for VMT per resident, VMT per employee, mode split, and total daily vehicle trips. If it is determined that the TCM is not meeting or beating the performance targets, then the developer will identify funding or fund the creation of a TMA for the site for a period of 20 years (if employers on the site aren't already participating in one), and the City of Atlanta will work with the TMA to develop and implement measures to help the TCM meet the performance targets. However, the manner of evaluating the performance of the TCM will differ slightly depending on whether it is done: (1) during the first five years following the opening of the 17th Street bridge to traffic, or (2) during the sixth year following the opening of the 17th Street bridge to traffic or thereafter.

EPA expects the first five years following the opening of the 17th Street bridge to traffic to be an interim period during which the redevelopment will be undergoing construction and the numbers of residents, employees, and uses, and the associated transportation options, patterns, and behaviors on the site will be in a state of flux.

Therefore, the data collected for the TCM during this period may not be representative of the ultimate performance of the project at build-out. Therefore EPA believes this interim period should provide some flexibility to meet the performance targets during the near term, as the site matures, while ensuring that the project demonstrates progress toward the final TCM performance targets for year six and thereafter.

EPA agrees with the commenter that the performance targets for the interim period in the proposed rulemaking were insufficient. In the proposed rulemaking, the TCM was required to perform better than the regional averages for VMT per resident, VMT per employee, and mode split during the interim period, but it did not have to demonstrate progress toward meeting the final performance targets for year six and thereafter. Therefore, the TCM has been revised so that it is required to perform better than the regional averages and demonstrate progress toward meeting the final performance targets during the interim period. The TCM will be evaluated at two, three-and-a-half, and five years following the opening of the 17th Street bridge to traffic. As in the proposal, in year two, the TCM must perform better than the regional averages. However, in year three-and-a-half, the TCM must perform better than it does in year two (unless it is already meeting or beating the final performance targets), and in year five, it must perform better than it does in year three-and-a-half.

Starting the sixth year after the 17th Street bridge opens to traffic, the performance of the TCM will be compared with the final TCM performance targets. EPA would not approve the Atlantic Steel TCM if it did not believe that the project has the potential to perform significantly better than the regional averages in terms of VMT per resident, VMT per employee,

and mode split. Therefore, the final Atlantic Steel TCM performance targets are set at levels that beat the current Atlanta regional averages by 20 percent or more, and EPA expects the project to easily attain the target values.

16. *Comment:* ''The TCM Document fails to provide performance targets that capture the majority of projected trips generated by the site. In its analysis of trips generated by the Atlantic Steel site, the Georgia Department of Transportation (GDOT) projected that retail trips, exclusive of office and residential trips, would account for approximately 45% of all weekday and 58% of all weekend trips generated by the site. The effectiveness of the site as a TCM depends largely on its ability to reduce the number of trips generated by the site, hence the inclusion of performance targets aimed at reducing resident and employee trips. However, if these account, as GDOT projects, for less than half of all trips generated by the site, a performance target of 25% of all resident and employee trips represents only 13.7% of all projected weekday trips (25% of 55%), and 10.5% (25% of 42%) of all weekend trips generated by the site. Therefore, the performance targets account for only half of all projected trips generated by the site and cannot meaningfully measure whether the Atlantic Steel Project is performing effectively. Moreover, EPA's consultants projected that the Atlantic Steel location would perform better than development at alternative regional locations assuming a transit share of 37% of all trips generated by the site, 270–350% above that provided for in the performance targets specified in the TCM Document. Therefore, it is possible that the performance targets specified in the TCM Document could be met at the same time the Atlantic Steel Project produces significantly greater emissions of NO_x, VOCs and CO, than those projected by the Hagler Bailly Report. The TCM Document fails to monitor the majority of trips generated by the site. As indicated above, the majority of trips generated by the site are projected to be retail trips. The TCM Document imposes an obligation on the City of Atlanta to collect and maintain data concerning travel behavior of residents and employees on the site but fails to require any information concerning retail trips. Failure to monitor the majority of trips to and from the site undermines the ability of the TMA to implement effective strategies to meet identified performance targets. Moreover, failure to monitor retail trips generated by the site prevents EPA from determining that the Atlantic Steel TCM is successful in producing regional emissions benefits even if performance targets for residents and employees are met. To justify designation as a TCM, the Atlantic Steel development must be able to demonstrate regional air quality emissions benefits. Without adequate information concerning retail trips, the EPA cannot rationally measure the effective of the measure as a TCM. For this reason, the TCM Document fails to comply with this EPA requirement for designation as a TCM.''

Response: EPA does not believe that the effectiveness of the Atlantic Steel TCM depends largely on its ability to reduce trips generated by the site, but rather on: (1) its ability to reduce the average distance of trips to and from the site compared to the trips that might have occurred had the development been built at other likely areas in the region; (2) its ability to reduce the number of trips that leave the site (i.e., a high internal capture rate); and (3) its ability to shift the trips made to, from, and on the site to modes of transportation other than the single-occupancy vehicle (SOV). This is why the TCM contains site design criteria—to ensure that the site is built with the densities, mix of uses, and transit and pedestrian features to support a high internal capture rate and transit mode split—and performance targets for VMT per resident and VMT per employee and percentage of trips by non-SOV modes.

At the same time, EPA recognizes that trips generated by and attracted to the redevelopment will have localized impacts that accrue with each additional trip. Therefore, a new performance measure has been added to the Atlantic Steel TCM to help limit the localized impacts due to trips to and from the redevelopment. The new performance measure addresses average daily total vehicle trips to and from the site, other than by transit, for all purposes combined, including retail trips. Daily total vehicle trips include those trips that have an on-site origin and an off-site destination, and trips that have an off-site origin and an on-site destination. It does not include trips that pass through the site but do not have an on-site origin or destination, and it does not include trips that have both an on-site origin and an on-site destination (i.e., internal capture). The target value for average daily total vehicle trips is 72,000 or less. This number is based on the predicted total vehicle trips for the site used in the CO hotspot analysis, EA, and 17th Street Concept Report. If the project exceeds this target, then the same contingencies take effect as in the case when any of the other performance targets is not met.

The reason that the TCM performance measures target only the trips made by residents and employees of the redevelopment is because the characteristics of the retail trips would be difficult to measure. However, the TCM allows the City of Atlanta to request that other information, such as characteristics of retail trips, be collected as a part of the TCM monitoring process. The new total vehicle trips performance measure will help constrain the emissions impacts of all trips to and from the redevelopment, including retail trips.

17. *Comment:* ''Further, the TCM Document acknowledges that without approval of an Information Collection Request (ICR) any component of the monitoring that requires a survey of ten or more people may not be enforceable. The TCM Document does not address the likelihood of obtaining such an approval. If the EPA is unable to enforce the monitoring requirements imposed in the TCM Document and thus unable to assess the effectiveness of the measure, designation of the Atlantic Steel site as a TCM cannot be rationally justified.''

Response: Under the Paperwork Reduction Act and Office of Management and Budget (OMB) regulations, OMB cannot approve a collection of information for a period longer than three years. (See 35 U.S.C. 3507(g); 5 CFR 1320.11(j).) However, it will be several years before monitoring of the Atlantic Steel TCM performance will commence, and therefore it would serve no purpose to submit an ICR at this time, as it would likely expire before data collection begins. Instead, EPA will wait to submit an ICR to OMB until the time for monitoring (i.e., the opening of the 17th Street bridge to traffic) draws near. If, as a result of OMB review, EPA determines that revisions to the rule are appropriate, EPA will reopen its final rulemaking to ensure that the performance of the Atlantic Steel TCM will be adequately monitored.

18. *Comment:* ''There is inadequate provision of transit to the site to justify its designation as a TCM. The TCM Document assumes the redevelopment plan includes a linkage to MARTA. The TCM Document, however, requires the developer to maintain the shuttle bus service to the MARTA station only for 10 years after the 17th Street bridge opens to traffic. After that time, there will be no transit servicing the site unless some other agency steps in. Except for the shuttle bus service the developer must provide, there is currently no commitment of funds for

the provision of transit service to the Atlantic Steel site. Further, the importance of transit servicing the site is evidenced by the high transit share assumption used by EPA's consultants in analyzing the positive estimated emissions benefits from the Atlantic Steel Project compared with alternative regional locations. Hagler Bailly assumed a transit share of 37% for the Atlantic Steel Project, a modal split that will be impossible to achieve if no transit service exists. For this additional reason, designation of the Atlantic Steel Project as a TCM cannot be supported by a rational administrative body.''

Response: The TCM has been revised to include a commitment by the developer to provide the rubber-tired shuttle service at least until December 31, 2015, which could be longer than 10 years, unless an appropriate entity operates a fixed mass transit link providing a similar level of service before that date. (See response to comment #10.)

Although currently there is no commitment of funds for transit service to the Atlantic Steel site beyond the developer's commitment, EPA believes it is reasonable to expect that transit will continue to serve the Atlantic Steel redevelopment after the developer's commitment expires. The 2025 Regional Transportation Plan (RTP) for the Atlanta region adopted by ARC anticipates assigning $1,677,000,000 for the construction of a light rail line from the MARTA Arts Center station through the Atlantic Steel redevelopment and extending northwest to the Town Center area in Cobb County (RTP projects AR–251A, AR–251B, and AR–251C). The first phase of the project, which would connect the MARTA Arts Center station to the Cumberland area through the Atlantic Steel redevelopment, is anticipated to be operational by 2010. The developer has committed in the TCM to provide without cost right of way in the development to MARTA or other acceptable entity for the construction of a transit linkage connecting the Atlantic Steel site to the MARTA Arts Center station.

In addition, the RTP includes $1,000,000 for a downtown westside transit study (AR–325). One of the objectives of the Central Atlanta Transportation Study (CATS), currently underway, is to develop alternatives for mobility between the Atlantic Steel redevelopment and the Georgia World Congress Center and destinations between, including transit. EPA also believes that MARTA will expand or alter its existing bus routes to include service to the Atlantic Steel site once the redevelopment attains a transit-supportable level of residents, employees and other trip generators.

For these reasons, EPA believes that the transit commitment supports approval of the Atlantic Steel TCM.

19. *Comment:* ''The TCM Document fails to demonstrate that achievement of performance targets identified will result in improved regional emissions. The TCM Document includes a transit capture target of 25% to be measured after two-thirds build-out or six years after the 17th Street bridge opens to traffic, whichever occurs first. In its comparative analysis of the Atlantic Steel Project with development at other regional locations, Hagler Bailly assumed a transit capture of 37%. If a mode split of only 25% is achieved, the TCM Document does not indicate how this will impact regional air emissions or whether the underlying justification for designation of the Atlantic Steel Project as a TCM still applies nor does it indicate whether CO hotspots might result.''

Response: The TCM includes a performance target that requires 25 percent or more of all trips to, from and on the site made by residents and employees combined, to use modes other than SOV. This target is not restricted to transit, but may also include pedestrian, bike, and HOV modes. EPA anticipates, however, that roughly 15 percent of the trips will be made via transit. This is consistent with the regional emissions modeling performed for the TCM and the CO hotspot analysis.

20. *Comment:* ''The TCM Document does not include accurate data on the plans for development of the site. The TCM Document describes the proposed development to occur on the site. At the public information meeting on April 18, 2000, the developer indicated that it planned to build in excess of 3,600 residential units on the site. The SIP revision should accurately reflect current plans for the development.''

Response: The developer has revised the site plan to match the assumptions contained in the TCM. In addition, as discussed in response to comment #16, a new performance target for total vehicle trips has been added to the TCM to limit total vehicle trips to and from the redevelopment. The new performance target is designed to help limit localized traffic and air quality impacts without constraining the amount of development at the site. Therefore, any increase in the amount of development over the numbers contained in the TCM should not result in higher emissions than those projected in EPA's analyses.

21. *Comment:* ''The number of lanes on the bridge must be reduced and the design speed must be 25 mph. We oppose any extension of the bridge's vehicular traffic lanes to West Peachtree Street and/or Peachtree Street. There is currently no 17th Street between Spring Street and West Peachtree Street which provides a buffer that protects the Ansley Park historic residential neighborhood. Creating a passage along 17th Street will funnel thousands of cars directly at Ansley Park and will invite drivers to use Ansley Park as an east-west cut-through to get not only to the Atlantic Steel site but also directly to the interstates.''

Response: EPA encourages GDOT to design the 17th Street bridge and associated interchange and roadway projects to maximize pedestrian, bicycle and transit orientation while minimizing additional SOV capacity. However, GDOT is responsible for determining the safe and appropriate number of lanes and design speeds for this project. Details regarding GDOT's traffic studies may be found in the 17th Street Concept Report and in the EA for the 17th Street Extension and Atlantic Steel Redevelopment. These documents are included in the docket for this rulemaking.

Regarding extension of the 17th Street to West Peachtree and Peachtree Streets, Spring and West Peachtree Streets form a north-south one-way pair, and therefore West Peachtree is a logical terminus of the extension of 17th Street. Once again, it is the responsibility of GDOT to design the roadways consistent with the need and purpose of this project. In addition, GDOT has determined that the design speed for 17th Street will be 35 mph. However, the City of Atlanta will be responsible for posting and enforcing speed limits on 17th Street and surrounding roadways, and may set the speed limits lower than the design speeds.

22. *Comment:* ''The Georgia Department of Transportation (Georgia DOT) has designed the bridge and related highway improvements to accommodate suburban style vehicular access to Midtown and the Atlantic Steel site. The size and design of the vehicular access is inappropriate for transit-oriented development. The health of citizens and the future economic vitality of the region require that we create places where riding transit and bikes, and walking are the preferred means of travel. Midtown is one of the few places in the region where we have the mix of uses, transit service and density to create true transit-pedestrian oriented living and working. The emphasis for this area

should be on improving transit and pedestrian access.''

Response: The 17th Street bridge will include a transition into Midtown to connect with existing surface streets in the area. This will require modifications to several surface streets and intersections in the surrounding area (e.g., Spring Street, West Peachtree Street, Peachtree Street, Williams Street, 14th Street, 16th Street, Techwood Drive). The original design for 17th Street and its connection to existing surface streets and intersections was based primarily on capacity criteria related to accommodating future traffic volumes. However, the City of Atlanta and a number of public, community, and business leaders expressed significant concerns about the scope and extent of the proposed modifications.

In response to these concerns, several key intersections and surface streets were redesigned. Additional urban design criteria were considered such as pedestrian safety and aesthetics, with less emphasis on accommodating future traffic volumes. The focus of the changes was to reduce: driving speeds, lane widths, the number of through and turning lanes, and turning radii of intersections. The ultimate objective was to balance the needs of cars, buses, bicycles, and pedestrians to better integrate 17th Street into the urban fabric of Midtown, and coordinate more closely with the vision for Midtown provided by the Midtown Alliance and ''Blueprint Midtown.'' Details regarding the redesign may be found in the 17th Street Concept Report and in the EA for the 17th Street extension and Atlantic Steel redevelopment. These documents are included in the docket for this rulemaking.

23. *Comment:* ''The only additional vehicular access from the Interstate highways to Midtown and Atlantic Steel should be for high occupancy vehicles. Creating more access for SOVs creates a time disincentive for people to ride transit to the site. There are already three SOV ramps in each direction from the Interstates to Midtown, but there are no dedicated HOV ramps. In addition, the design of any vehicular access to Midtown should assume that vehicles exit the freeway at or below the posted speed for the Interstate. Excess speed on the Interstates and other roadways contribute significantly to the region's air pollution problems. GDOT has contributed to the speed problem by designing most Interstates in the region for an average speed of 70 mph. Any roadway improvements in the Midtown area should improve pedestrian access. Without high quality and continuous pedestrian facilities transit does not work. Turn radii and crosswalk lengths must be minimized. Finally, the construction of any roadway improvements should be staged to prevent excess capacity early from inducing additional vehicular travel, and to provide an incentive for using transit. Specifically, the bridge itself should have no more than one SOV lane in each direction. An additional lane in each direction should be reserved for buses only.''

Response: Several alternatives were considered that would provide HOV access as part of the project. The first alternative considered direct HOV access to and from the 17th Street bridge. However, due to engineering and site constraints, it was determined that HOV access could be provided to the bridge, but no return access to the Interstate could be provided. In addition, provision of HOV access from the Interstate would significantly impact the future ability to redesign the Interstate-75 southbound to Interstate-85 northbound loop. Therefore, direct access to the 17th Street bridge was not considered further.

Several additional HOV access alternatives were considered: (1) access at 5th Street and a new 12th Street HOV-only bridge; (2) HOV-only bridge at 15th Street; and (3) reconfiguration of the 14th Street bridge to accommodate HOV access. However, due to the scope of these alternatives and based on the concerns raised by the public and other agencies, it was decided to separate out HOV access from this project. A future regional study examining the optimal location of HOV access into Midtown and potentially Atlantic Steel will be completed as a separate project. The design of the 17th Street bridge will not preclude any possible HOV access alternatives that may be identified in the future.

As EPA explained in response to comment #21, GDOT is responsible for designing the 17th Street bridge and associated interchange and roadway modifications. However, as explained in response to comment #22, GDOT has responded to many of the commenter's concerns by redesigning several key intersections and surface streets in the project. Details regarding the redesign may be found in the 17th Street Concept Report and in the EA. These documents are included in the docket for this rulemaking.

24. *Comment:* ''The developer is potentially held in jeopardy if the City of Atlanta and MARTA do not implement the transit service described in the agreement. The development at this site should only be allowed if there is a dedicated funding source for the transit service. Specifically, an increment of the increased taxes collected from development at and near the Atlantic Steel site be dedicated to transit service connecting the site to adjacent neighborhoods, downtown and the Arts Center rail station.''

Response: It is the developer, not the City of Atlanta or MARTA, that has committed to provide the transit service described in the TCM. Therefore, the developer will be responsible for funding and implementing the transit service, whether it is through public or private sources, or a combination of the two. As suggested by the commenter, it is possible that a portion of the funds generated by the Brownfield Area Tax Allocation District #2, which includes the Atlantic Steel redevelopment, may be used to support the transit service.

25. *Comment:* ''We are concerned that the proposed transportation improvements for the Atlantic Steel site do not meet the standards for transit service or transit oriented design necessary to justify the TCM designation for the highway improvements. We are especially concerned that the large highway improvements will undermine the developer's emphasis on transit accessibility.''

Response: EPA believes that the transit components of the project support the TCM designation. In particular, the transit components include: a 10-plus year commitment by the developer to provide a shuttle bus connection to the site that will be well integrated into the MARTA Arts Center station; a high level of service with hours of operation and headways that complement the train schedule at the MARTA Arts Center station; a route that covers the site, including four stations and six stops; compliance with the Americans with Disabilities Act; dedicated transit lanes with possible signal prioritization; a transit-oriented site design criterion; a requirement that the 17th Street bridge be designed to accommodate future rail transit; and the developer's intention to utilize alternatively-fueled buses. EPA continues to encourage GDOT to design the associated roadway improvements to maximize the transit, pedestrian, and bicycle orientation of the project.

26. *Comment:* ''We do not believe the Environmental Protection Agency has adequately responded to the concerns and suggestions made by the Environmental Defense Fund (EDF) in a letter dated February 1, 1999. In addition, the analysis of the TCM Document by APCA in a letter dated May 10, 2000, raises serious concerns about the technical adequacy of the transportation and development

analysis. Before approving the TCM for the 17th Street bridge and related highway improvements EPA should review the issues raised by EDF and APCA, correct deficiencies in the analysis and respond to the issues raised.''

Response: EPA has responded to APCA's May 10, 2000, letter in the responses to comments #1 through #21. In addition, EPA collaborated with the City of Atlanta and the developer to revise the proposed TCM to help address concerns raised by APCA. EPA is approving the TCM and revisions.

EPA responds to the issues raised in the February 1, 1999, EDF letter below.

27. *Comment:* ''We want to be assured that, as a TCM, the package that includes the 17th Street bridge/interchange will demonstrate a contribution to better air quality, rely on rigorous evaluation and follow-up measures, be a real, permanent, and legally enforceable part of the SIP, and be subject to EPA approval, with opportunities for meaningful and substantive public involvement. Once the bridge, interchange, and related real estate development is built, it will not be possible to shut these down if they fail to meet their planned performance objectives.''

Response: In the proposed rulemaking, EPA described in detail: the regional emissions analysis which indicates that implementation of the TCM will contribute to better air quality; the site design criteria, performance targets, and monitoring and evaluation plans which will help ensure that the TCM will meet the planned performance objectives; and the legal enforceability of the TCM. EPA believes that the public has had many opportunities for meaningful and substantive involvement in the development of the Atlantic Steel TCM through the Project XL, NEPA, and TCM processes. For example, as described earlier, the APCA's May 10, 2000, letter resulted in several revisions to the proposed TCM. In fact, as mentioned in the response to comment #2, EPA believes that there has been a much greater opportunity for public involvement in the Atlantic Steel TCM than there would be in the development of a typical TCM. A listing of public and interagency meetings regarding the Atlantic Steel project is contained in the docket for this rulemaking. In addition to the past opportunities for public involvement, the proposed TCM was revised to require that the developer and the City of Atlanta continue to meet with Neighborhood Planning Unit E and the Midtown Alliance as the Atlantic Steel site builds out to review the latest site plan and to discuss the preliminary results of the monitoring.

28. *Comment:* ''Great care must be exercised in developing the project agreements, detailing realistic, but ambitious and enforceable quantitative criteria for transportation and environmental performance. These should include vehicle miles of travel, vehicle trip starts and trip ends, and mode share targets, as well as specific emission reduction objectives. These should be grounded in detailed analytic studies, with explication of supportive management and service strategies, and should be backed up by institutional and financial structures strong enough to guarantee compliance over time, with backstop arrangements. We suggest the project agreement and TCM package might be backed with a private performance bond that insures resources will be available to implement transit and TMA management measures as needed to meet the adopted performance criteria in the event of a financial default by the developer or failure of the TMA or transit service agreements to comply with the agreements.''

Response: As described in the proposed rulemaking and in response to comment #16, the TCM contains performance targets for VMT per resident and employee, non-SOV mode split, and total vehicle trips to and from the site. These performance measures are based in part on the regional modeling performed by EPA using ARC's travel demand model. The TCM also includes an enforceable commitment by the City of Atlanta to coordinate with the TMA for the site to develop and implement additional measures to help the project meet the targets if necessary. However, as explained in response to comment #13, EPA believes that it is not necessary for the City of Atlanta to identify funding sources for potential additional measures until such time as they may be needed.

29. *Comment:* ''The location alone is not an adequate basis for deeming this or other land-use related projects as TCMs or awarding air quality credit to them. There are several factors that will have a profound impact on the travel behavior and air quality impacts related to the redevelopment and the related Bridge/Interchange TCM package. These include: the quality, quantity, location, and design of transit services and connections of the proposed redevelopment site to MARTA stations and to other regional trip generators and attractors; the degree of pedestrian and bicycle friendliness of urban and street design in and around the Atlantic Steel site; the supply, location, and price of parking, and other travel prices and incentives offered to travelers to and from the site; the design of the Bridge/Interchange itself and the way in which it connects across the Interstate highway. The project agreement, and the package that is submitted to become a part of the TIP, RTP, and SIP must clearly define these elements.''

Response: EPA agrees that location alone is not an adequate basis for deeming this project a TCM. EPA is approving this TCM for a variety of reasons in addition to its location, as described in the proposed rulemaking, including most of those mentioned by the commenter. EPA believes that the elements that make this project a TCM are clearly defined in the SIP and 17th Street Concept Report. These documents are included in the docket for this rulemaking.

30. *Comment:* ''To meet these objectives, the project should include guaranteed funding mechanisms (such as a development district tax) for a Transportation Management Association (TMA) for the project and surrounding district. The TMA should be a public-private partnership with the power to influence key elements that shape travel behavior and emissions related to the Atlantic Steel site.''

Response: The formation of a TMA for Midtown is currently underway. In the fourth quarter of 2000 the business plan will be refined, marketing materials designed and printed, programs developed, and base line data statistics established. The Midtown TMA will begin offering transit programs beginning in January 2001. The TMA will cover roughly the area bounded by Northside Drive to the west, Piedmont Road to the east, the Interstate-75/85 Brookwood Interchange to the north, and Ralph McGill Boulevard to the south. The TMA will be funded initially through the Midtown Community Improvement District (MID), ARC and the Atlanta Transportation Improvement Program. Long term funding is expected to be through the MID and through fees paid by members of the TMA who are not also contributing to the MID. It is expected that the developer of Atlantic Steel will be invited to sit on the Advisory Board for the Midtown TMA, and that employers on the Atlantic Steel site will join the TMA as they come on-line.

31. *Comment:* ''We are concerned that while the Bridge and Interchange have undergone significant preliminary engineering, there is still little specificity about the transit service connections to be provided to the Atlantic Steel site. Without a specific

plan and financing arrangement, this missing key element seems enough to deem the project inadequately defined to make up an approvable TCM. And under current circumstances, unless the project is defined well enough to be an approvable TCM, we do not see how it can legally be approved as a part of the TIP, RTP, or SIP. We would hope to see a very high frequency transit connection between the Atlantic Steel site and MARTA, with service throughout the day and into the night that allows travelers to travel most of the time without worrying about scheduled connections. While light rail may be attractive, given the need for rapid deployment of a high quality transit link, flexible phasing of service, and currently limited financing, this context might be appropriate for application of a bus rapid transit system strategy, like that in Curitiba, Brazil, with high level boarding separate from fare collection, with designated stations, and potential to serve multiple trip origins.''

Response: The proposed transit service for the Atlantic Steel redevelopment is described in detail in the December 16, 1999, report entitled ''Transit Connection Atlantic Steel Redevelopment Project to MARTA Arts Center Station Atlanta, Georgia.'' EPA believes that the proposed transit service incorporates many of the suggestions made by the commenter. The transit report is included in the docket for this rulemaking.

32. *Comment:* EDF recommended several programs, incentives, and site design features (e.g., Employee Commuter Choice incentives, parking excise levies, bundling free or highly discounted annual regional transit passes with each residential unit, car sharing systems, real-time ridesharing services, secure short and long term bicycle parking) for inclusion in the TCM that would influence travel choice to the site.

Response: EPA will continue to encourage the City of Atlanta, the TMA (when it exists), and the developer to consider the kinds of programs, incentives, and design features suggested by EDF. However, EPA believes it is more appropriate that the City of Atlanta, the TMA, and the developer identify the most effective programs and detailed design features through evaluation of the data that will be collected as part of the monitoring requirements of the TCM, rather than prescribing them in the TCM.

33. *Comment:* ''The choice of bridge design will have a major effect on the travel behavior in the area of Atlantic Steel and cannot be ignored in developing air quality agreements. The 17th Street bridge/interchange Concept Report, dated December 21, 1998, offers a preferred alternative that would extend the freeway into the city on both sides of the Interstate. This preferred alternative should be rejected as inappropriate for designation as a TCM. The facility should be redesigned to extend the city's arterial street grid over the freeway, using the bridge as a buffer to the freeway that now slashes the city in half. A lower level facility that would allow 17th Street to intersect with Spring Street on the east of Interstate-75 and that would connect with the street grid as close as possible on the west side of Interstate-75, without the added collector-distributor connections between 14th Street and the freeways north of 17th Street, would be less oriented towards high speed vehicle movement but would enhance pedestrian connectivity. The preferred alternative with a high signature bridge would create a dehumanized environment oriented mostly toward cars. With that design few would choose to walk between the West Peachtree Street/Art Center MARTA station and the Atlantic Steel site. A better alternative would be a more horizontal engineering structure, like that in Seattle's Freeway Park, reconnecting the east and west side neighborhoods with a decked structure over the freeway for a good portion of the distance between 14th and 17th Streets. This could include landscaping, space for market stalls or kiosks, sculptural elements, and elements that would humanize and energize this as a safe and inviting pedestrian environment, with insulation from freeway noise and pollution.''

Response: The 17th Street Concept Report has been revised since December 21, 1998, such that the preferred alternative for the 17th Street bridge now intersects with Spring Street on the east side of the interstate. As mentioned in the response to comment #22, the concept has also been revised to better balance the needs of cars, buses, bicycles, and pedestrians, to better integrate 17th Street into the urban fabric of Midtown, and to coordinate more closely with the vision for Midtown provided by the Midtown Alliance and ''Blueprint Midtown.'' Furthermore, the preferred alternative for the 17th Street bridge does not contain direct connections to the collector-distributor system between 14th Street and the freeways north of 17th Street. Although the preferred alternative does not envision the decked structure over the freeway suggested by EDF, the actual design of the 17th Street bridge has not been finalized. However, there is general agreement that the 17th Street bridge should be designed as a ''gateway'' structure into the heart of Downtown Atlanta, if possible. Regardless, qualified landscape architects will work to ensure that aesthetic values and overall compatibility with existing and future Midtown streetscapes are achieved in the course of final bridge and roadway design. In addition, EPA will continue to encourage GDOT to design the bridge to maximize pedestrian, bicycle, and transit-friendly elements, such as those suggested by EDF.

34. *Comment:* ''We are also concerned that the traffic analysis of the Interchange/Bridge prepared for GDOT is based simply on ITE trip generation rates, reduced by a 10% internal capture and a 15% transit share. We are unsure what is the basis for these assumptions. The traffic analysis should not drive the bridge and interchange design, but alternative designs should be considered with appropriate sensitivity to stated assumptions about travel incentives, transit service levels, pedestrian friendliness, and other factors.''

Response: The traffic analysis of the 17th Street bridge and associated roadway improvements is based on ITE trip generation rates, and 1998 observed traffic counts in the study area, grown to the future analysis year, as described in response to comment #6. These assumptions were based on the professional judgment of GDOT, and they are consistent with the state of the practice for traffic analyses. Although the traffic analysis did drive much of the early concept for the 17th Street bridge and associated roadway improvements, as discussed in response to comment #22, GDOT has since revised the concept for several key intersections and surface streets to reduce: driving speeds, lane widths, the number of through and turning lanes, and turning radii of intersections. Details may be found in the 17th Street Concept Report and in the EA for the 17th Street extension and Atlantic Steel redevelopment, which are included in the docket for this rulemaking.

III. Final Action

EPA is approving the Atlantic Steel TCM into the SIP under authority of section 110 of the CAA.

IV. Administrative Requirements

Under Executive Order 12866 (58 FR 51735, October 4, 1993), this action is not a ''significant regulatory action'' and therefore is not subject to review by the Office of Management and Budget. This action merely approves state law as

meeting federal requirements and imposes no additional requirements beyond those imposed by state law. Accordingly, the Administrator certifies that this rule will not have a significant economic impact on a substantial number of small entities under the Regulatory Flexibility Act (5 U.S.C. 601 *et seq.*). Because this rule approves pre-existing requirements under state law and does not impose any additional enforceable duty beyond that required by state law, it does not contain any unfunded mandate or significantly or uniquely affect small governments, as described in the Unfunded Mandates Reform Act of 1995 (Public Law 104–4). For the same reason, this rule also does not significantly or uniquely affect the communities of tribal governments, as specified by Executive Order 13084 (63 FR 27655, May 10, 1998). This rule will not have substantial direct effects on the states, on the relationship between the national government and the states, or on the distribution of power and responsibilities among the various levels of government, as specified in Executive Order 13132 (64 FR 43255, August 10, 1999), because it merely approves a state rule implementing a federal standard, and does not alter the relationship or the distribution of power and responsibilities established in the Clean Air Act. This rule also is not subject to Executive Order 13045 (62 FR 19885, April 23, 1997), because it is not economically significant.

In reviewing SIP submissions, EPA's role is to approve state choices, provided that they meet the criteria of the Clean Air Act. In this context, in the absence of a prior existing requirement for the State to use voluntary consensus standards (VCS), EPA has no authority to disapprove a SIP submission for failure to use VCS. It would thus be inconsistent with applicable law for EPA, when it reviews a SIP submission, to use VCS in place of a SIP submission that otherwise satisfies the provisions of the Clean Air Act. Thus, the requirements of section 12(d) of the National Technology Transfer and Advancement Act of 1995 (15 U.S.C. 272 note) do not apply. As required by section 3 of Executive Order 12988 (61 FR 4729, February 7, 1996), in issuing this rule, EPA has taken the necessary steps to eliminate drafting errors and ambiguity, minimize potential litigation, and provide a clear legal standard for affected conduct. EPA has complied with Executive Order 12630 (53 FR 8859, March 15, 1988) by examining the takings implications of the rule in accordance with the ''Attorney General's Supplemental Guidelines for the Evaluation of Risk and Avoidance of Unanticipated Takings'' issued under the Executive Order.

The Congressional Review Act, 5 U.S.C. section 801 *et seq.*, as added by the Small Business Regulatory Enforcement Fairness Act of 1996, generally provides that before a rule may take effect, the agency promulgating the rule must submit a rule report, which includes a copy of the rule, to each House of the Congress and to the Comptroller General of the United States. EPA will submit a report containing this rule and other required information to the U.S. Senate, the U.S. House of Representatives, and the Comptroller General of the United States prior to publication of the rule in the **Federal Register**. A major rule cannot take effect until 60 days after it is published in the **Federal Register**. This action is not a ''major rule'' as defined by 5 U.S.C. section 804(2).

Under section 307(b)(1) of the Clean Air Act, petitions for judicial review of this action must be filed in the United States Court of Appeals for the appropriate circuit by October 27, 2000. Filing a petition for reconsideration by the Administrator of this final rule does not affect the finality of this rule for the purposes of judicial review nor does it extend the time within which a petition for judicial review may be filed, and shall not postpone the effectiveness of such rule or action. This action may not be challenged later in proceedings to enforce its requirements. (See section 307(b)(2).)

List of Subjects in 40 CFR Part 52

Environmental protection, Air pollution control, Carbon monoxide, Hydrocarbons, Ozone.

Dated: August 16, 2000.

John H. Hankinson, Jr.,

Regional Administrator, Region 4.

Part 52 of chapter I, title 40, *Code of Federal Regulations,* is amended as follows:

PART 52—[AMENDED]

1. The authority citation for part 52 continues to read as follows:

Authority: 42.U.S.C. 7401 *et seq.*

Subpart L—Georgia

2. In § 52.570 paragraph (e), the table is amended by adding a new entry ''13.'' to read as follows:

§ 52.570 Identification of plan.

* * * * *

(e) * * *

Name of nonregulatory SIP provision	Applicable geographic or nonattainment area	State submittal date/effective date	EPA approval date
*	*	*	*
13. Atlantic Steel Transportation Control Measure ...	Atlanta Metropolitan Area	March 29, 2000	August 28, 2000

[FR Doc. 00–21906 Filed 8–25–00; 8:45 am]

BILLING CODE 6560–50–P

ENVIRONMENTAL PROTECTION AGENCY

40 CFR Part 300

[FRL–6854–1]

National Oil and Hazardous Substances Pollution Contingency Plan; National Priorities List

AGENCY: Environmental Protection Agency (EPA).

ACTION: Direct final deletion of the General Tire Landfill Site from the National Priorities List (NPL).

SUMMARY: EPA Region 4 announces the deletion of the General Tire Landfill Site (site) from the NPL and requests public comment on this action. The NPL constitutes appendix B to Part 300 of the National and Hazardous Substances Pollution Contingency Plan (NCP), which EPA promulgated pursuant to section 105 of the Comprehensive Environmental Response,

Compensation, and Liability Act of 1980 (CERCLA) as amended. The EPA has determined that the site poses no significant threat to public health or the environment, as defined by CERCLA, and therefore, no further remedial measures pursuant to CERCLA is warranted.

DATES: This ''direct final'' action will be effective on October 27, 2000, unless EPA receives significant adverse or critical comments by September 28, 2000. If adverse comments are received, EPA will publish a timely withdrawal of the direct final rule in the **Federal Register** informing the public that the rule will not take effect.

ADDRESSES: Comments may be mailed to Nestor Young, Remedial Project Manager, U.S. Environmental Protection Agency, Region 4, 61 Forsyth Street, SW., Atlanta, GA 30303, (404) 562–8812, young.nestor@epa.gov. Comprehensive information on this site is available through the public docket which is available for viewing at the site information repositories at the following locations: U.S. EPA Region 4, 61 Forsyth Street, SW., Atlanta, GA 30303; and the Graves County Library, 601 North 17 Street, Mayfield, Kentucky 42066, (270) 247–2911.

FOR FURTHER INFORMATION CONTACT: Nestor Young, Remedial Project Manager, U.S. Environmental Protection Agency, Region 4, 61 Forsyth Street, SW., Atlanta, GA 30303, (404) 562–8812, Fax (404) 562–8788, *young.nestor@epa.gov*.

SUPPLEMENTARY INFORMATION:

Table of Contents

I. Introduction
II. NPL Deletion Criteria
III. Deletion Procedures
IV. Basis of Intended Site Deletion
V. Action

I. Introduction

The Environmental Protection Agency Region 4 announces the deletion of the General Tire Landfill Superfund Site, Mayfield, Graves County, Kentucky, from the National Priorities List (NPL), Appendix B of the National Oil and Hazardous Substances Pollution Contingency Plan (NCP), 40 CFR part 300. EPA identifies sites that appear to present a significant risk to public health, welfare, or the environment and maintains the NPL as the list of these sites. EPA has determined that the site does not pose an imminent and substantial endangerment to the public health and welfare, and the environment. EPA will accept public comments for thirty days after publication of this notice in the **Federal Register**.

Section II of this notice describes the criteria for deleting sites from the NPL. Section III discusses the history of the General Tire Site and explains how the site meets the deletion criteria. Section V states EPA's action to delete the site from the NPL unless dissenting comments are received during the comment period.

II. NPL Deletion Criteria

Section 300.425(e) of the NCP provides that sites may be deleted from, or recategorized on the NPL where no further response is appropriate. In making a determination to delete a release from the NPL, EPA shall consider, in consultation with the state, whether any of the following criteria has been met:

(i) Responsible parties or other persons have implemented all appropriate response action required;

(ii) All appropriate fund-financed response under CERCLA has been implemented, and no further response action by responsible parties is appropriate; or

(iii) The remedial investigation has shown that the release poses no significant threat to public health or the environment and, therefore, taking of remedial measures is not appropriate.

In the case of the General Tire Site, EPA's remedial investigation and subsequent follow up groundwater studies conducted under state supervision, indicated that the site does not pose a significant threat to public health or the environment, and, therefore, active remedial measures are not appropriate. If new information becomes available which indicates a need for future action, EPA may initiate any remedial action necessary. In accordance with the NCP (40 CFR 300.425 (e)(3)), whenever there is a significant release from a site deleted from the NPL, the site shall be restored to the NPL without application of the Hazard Ranking System (HRS).

III. Deletion Procedures

The following procedures were used for the intended deletion of the site: (1) All appropriate response under CERCLA has been implemented and no further action by EPA is appropriate; (2) the Commonwealth of Kentucky has concurred with the proposed deletion decision; (3) a notice has been published in the local newspaper and has been distributed to appropriate federal, state and local officials and other interested parties announcing the commencement of a 30-day public comment period on EPA's Direct Final Deletion; and, (4) all relevant documents have been made available for public review in the local site information repository. EPA is requesting only dissenting comments on the proposed action to delete.

For deletion of the release from the site, EPA's Regional Office will accept and evaluate public comments on EPA's Final Notice before making a final decision to delete. If necessary, EPA will prepare a Responsiveness Summary, responding to each significant comment submitted during the public comment period. If no dissenting comments are received, no further activities will be implemented and this ''direct final'' action will become effective. Deletion of the site from the NPL does not itself create, alter, or revoke any individual's rights or obligations. The NPL is designed primarily for informational purposes and to assist EPA management. As mentioned in Section II of this document, § 300.425(e)(3) of the NCP states that the deletion of a site from the NPL does not preclude eligibility for future response actions.

IV. Basis for Intended Site Deletion

The following site summary provides EPA's rationale for the proposal to delete the General Tire Site from the NPL.

The General Tire Landfill is located east of State Highway 45, approximately two miles north of Mayfield, in Graves County, Kentucky. The landfill is situated adjacent to the General Tire manufacturing plant, between the Paducah/Louisville Railroad and Mayfield Creek.

The General Tire Plant started operation in the early 1960s and currently continues to operate. Throughout its operational history, the plant manufactured automobile, truck and tractor tires. The process requires large quantities of cooling water that is supplied by six water wells located next to the plant. These wells supply approximately 10 million gallons per day of water for use in the manufacturing process.

In 1970, the General Tire Plant received approval from the Commonwealth of Kentucky Department for Environmental Protection (KYDEP) for construction and operation of a landfill at the Mayfield site. Wastes from the plant, consisting of hazardous and non-hazardous wastes, were buried in a series of trenches approximately 1,300 feet long, 40 feet wide and 30 feet deep. The trenches were oriented in a north-south direction over an approximate 58 acre area. Some of the plant wastes placed in the landfill

included carbon black, scrap rubber and tires, scrap hydraulic oil, lubricating oil, floor sweepings, rejected product material, trash, wood, paper packaging, and cements containing solvents.

In 1979, ''hazardous wastes'' defined by the Resource Conservation and Recovery Act were no longer disposed of in the landfill. However, General Tire continued to dispose of ''non-hazardous'' wastes from the plant until late 1984, under a permit issued by the KYDEP. KYDEP approved a closure plan for the landfill in 1985. The plan consisted of covering the trenches with two feet of clean soil, and monitoring the groundwater for a two year period after construction of the cover was properly completed. The landfill was covered and seeded in the fall of 1985.

After completing a preliminary assessment and site investigation, EPA proposed the landfill for inclusion on the National Priorities List (NPL) in June 1988. In February 1990, the site was added to the NPL.

In December 1989, General Tire and EPA entered into an Administrative Order by Consent for performance of a Remedial Investigation/Feasibility Study (RI/FS). The RI/FS was started in October 1990 and completed in May 1993.

After careful evaluation of all the exposure routes, estimated carcinogenic and non-carcinogenic health risks, and ecological impacts, EPA concluded that the landfill does not pose an unacceptable risk to the environment or to human health and welfare.

Operation of the plant wells has significantly limited the migration and potential human and environmental exposure to any contaminants that may have been released from the landfill into the groundwater. Since migration of contaminants through the groundwater is the primary mechanism by which the landfill can impact human health or the environment, EPA believes that the plant wells have provided a significant level of protection by capturing those contaminants released into the groundwater. The landfill does not pose a threat to human health or the environment provided the plant wells continue to operate. However, based on known characteristics of the aquifer, EPA is concerned that environmental conditions at the site may become worse if General Tire's plant wells cease operating. Consequently, an evaluation of the groundwater will be necessary in the future to determine the landfill's impact on the shallow aquifer without the influence of the plant wells. EPA deferred this site to the Commonwealth of Kentucky, Department for Environmental Protection for continued monitoring of the site and future evaluation of the groundwater upon shut down of the General Tire plant wells.

Based on the data collected in the Remedial Investigation and the health risks estimated in the Baseline Risk Assessment, EPA selected a no-further-action remedy in the Record of Decision issued on October 1, 1993.

The KYDEP did not concur with EPA's remedy selection, or subsequent request for NPL deletion. In the years following the ROD, KYDEP conducted a follow-up groundwater study which did not show any significant worsening conditions in the groundwater. Currently, KYDEP continues to monitor groundwater at the site through a groundwater monitoring plan performed by Continental General Tire Inc (the potentially responsible party). Based on the additional groundwater data collected, EPA requested KYDEP to reconsider its position on NPL deletion. On April 27, 2000, KYDEP agreed that the NPL listing could be removed.

V. Action

The Environmental Protection Agency and the Kentucky Department for Environmental Protection agrees that no further CERCLA action is necessary and that the site does not pose a threat to human health and the environment. KYDEP will continue to monitor the groundwater, and in the event of a significant future release of contamination that may impact human health or the environment, EPA may initiate appropriate CERCLA actions in accordance with the NCP.

VI. State Concurrence

The Commonwealth of Kentucky, in a letter dated April 27, 2000, concurs with EPA that the criteria for deletion of the NPL listing have been met. Therefore, EPA is deleting the General Tire Landfill site from the NPL, effective on October 27, 2000. However, if EPA receives dissenting comments by September 28, 2000, EPA will publish a document that withdraws this action.

List of Subjects in 40 CFR Part 300

Environmental protection, Chemicals, Hazardous substances, Hazardous wastes, Intergovernmental relations, Penalties, Superfund, Water pollution control, Water supply.

Dated: August 9, 2000.

A. Stanley Meiburg,

Acting Regional Administrator, EPA Region 4.

Part 300, title 40 of chapter I of the Code of Federal Regulations is amended as follows:

PART 300—[AMENDED]

1. The authority citation for part 300 continues to read as follows:

Authority: 33 U.S.C. 1321(c)(2); 42 U.S.C. 9601–9657; E.O. 12777, 56 FR 54757, 3 CFR, 1991 Comp.; p. 351; E.O. 12580, 52 FR 2923, 3 CFR, 1987 Comp.; p. 193.

Appendix B—[Amended]

2. Table 1 of Appendix B to Part 300 is amended by removing the site for ''General Tire & Rubber (Mayfield Landfill) Mayfield, Kentucky''.

[FR Doc. 00–21373 Filed 8–25–00; 8:45 am]

BILLING CODE 6560–50–U

DEPARTMENT OF HEALTH AND HUMAN SERVICES

Health Care Financing Administration

42 CFR Part 457

[HCFA–2114–CN]

RIN 0938–AI65

State Child Health; State Children's Health Insurance Program Allotments and Payments to States; Correction

AGENCY: Health Care Financing Administration (HCFA), HHS.

ACTION: Final rule; correction.

SUMMARY: This document corrects a typographical error that appeared in the final rule concerning the State Children's Health Insurance Program published in the **Federal Register** on May 24, 2000.

EFFECTIVE DATE: This correction is effective june 23, 2000.

FOR FURTHER INFORMATION CONTACT: Richard Strauss, (410) 786–2019.

SUPPLEMENTARY INFORMATION: On May 24, 2000, we published a final rule in the **Federal Register** (65 FR 33616) that sets forth the methodologies and procedures to determine the Federal fiscal year allotments of Federal funds available to individual States, Commonwealth and Territories for the new State Children's Health Insurance Program established under title XXI of the Social Security Act. This document corrects the error made in this final rule.

In rule FR Doc. 00–12879 published on May 24, 2000, make the following correction.

§ 457.218 [Corrected]

On page 33625, in column 1, in § 457.218(b) ''22 percent'' is corrected to read ''2½ percent''.

(Section 1102 of the Social Security Act (41 U.S.C. 1302)

(Catalog of Federal Domestic Assistance Program No. 00.000, State Children's Health Insurance Program)

Dated: August 18, 2000.

Brian P. Burns,

Deputy Assistant Secretary for Information Resources Management.

[FR Doc. 00–21762 Filed 8–25–00; 8:45 am]

BILLING CODE 4120–01–M

DEPARTMENT OF TRANSPORTATION

Coast Guard

46 CFR Part 27

[USCG 1998–4445]

RIN 2115–AF66

Fire Protection Measures for Towing Vessels

AGENCY: Coast Guard, DOT.

ACTION: Final rule.

SUMMARY: This final rule makes a few changes to the fire-protection measures for towing vessels that were implemented by an interim rule in this rulemaking published on October 19, 1999. It makes them because of the public comments submitted in response to that rule. The changes clarify the requirements for fuel shut-off valves, fuel-tank vents, the design of fire-detection systems for engine rooms, and safety orientations.

DATES: *Effective Date:* This final rule is effective September 27, 2000.

ADDRESSES: The Docket Management Facility maintains the public docket for this rulemaking. Comments, and documents as indicated in this preamble will become part of this docket and will be available for inspection or copying at room PL–401 on the Plaza level of the Nassif Building at the same address between 9 a.m. and 5 p.m., Monday through Friday, except Federal holidays. You may also access this docket on the Internet at http://dms.dot.gov.

FOR FURTHER INFORMATION CONTACT: For questions on this rule, contact Randall Eberly, Office of Design and Engineering Standards (G–MSE), Coast Guard, telephone 202–267–1861, electronic mail Reberly@comdt.uscg.mil. For questions on viewing or submitting material to the docket, call Dorothy Beard, Chief, Dockets, Department of Transportation, telephone 202–366–9329.

SUPPLEMENTARY INFORMATION:

Background and Purpose

On January 19, 1996, the tugboat *Scandia*, with the tank barge *North Cape* in tow, caught fire five miles off the coast of Rhode Island. Crewmembers could not control the fire and, without power, they were unable to prevent the barge carrying 4 million gallons of oil from grounding and spilling about a quarter of its contents into the coastal waters. The *North Cape* spill led Congress to add, by § 902 of the 1996 Coast Guard Authorization Act [Pub. L. 104–324] (the Authorization Act), a new subsection, (f), to 46 U.S.C. 4102, to permit the Secretary of Transportation—''in consultation with the Towing Safety Advisory Committee'' (TSAC)—to require fire-suppression measures on all towing vessels. We published a notice of proposed rulemaking (NPRM) on safety of towing vessels and tank barges [CGD 97–064] [RIN 2115–AF53] on October 6, 1997 (62 FR 52057). Afterward, we divided the rulemaking to address fire-suppression systems and fire-protection measures separately. We issued an interim rule [USCG 1998–4445] [RIN 2115–AF66] on October 19, 1999 64 FR 56257), to implement certain fire-protection measures for towing vessels. We plan to issue a supplemental notice of proposed rulemaking (SNPRM) on fire-suppression systems and voyage planning for towing vessels [USCG 2000–6931] [RIN 2115–AF53] later this year.

Statutory Mandate

Section 902 of the Authorization Act gave the Coast Guard the authority to require ''the installation, maintenance, and use of a fire suppression system or other measures . . . on board towing vessels.'' However, for vessels that tow non-self-propelled tank vessels, the Authorization Act did not just give the Coast Guard the authority; it mandated that the Coast Guard require these measures. The measures that the Coast Guard is requiring in this rule are based, in part, on recommendations from the TSAC.

Regulatory Approach

The interim rule prescribed that most towing vessels be fitted with—

- General alarms,
- Fire-detection systems for engine rooms,
- Internal-communication systems, and
- Remote fuel shut-off valves.

Furthermore, these vessels must conduct fire-fighting drills and establish training requirements for their crews. The rule exempted towing vessels that engage only in assistance towing, pollution response, or fleeting.

Requirement for a Fire-Suppression System

Neither the interim rule nor this final rule implements any requirements for fixed fire-suppression systems on towing vessels. A separate rulemaking, entitled ''Fire-Suppression Systems and Voyage Planning for Towing Vessels'', addresses those systems.

In the NPRM, we proposed a combination of early-warning fire-detection systems, semi-portable fire extinguishers, fixed or portable fire pumps, and training of crews as alternative means of fire protection. During the comment period for the NPRM, we received numerous comments critical of these alternative measures. Many of the commenters stated that the measures did not meet the intent of the Authorization Act, because they would not require total-flooding fire-extinguishing systems. Further, the commenters stated that the measures did not consider vessels' characteristics, methods of operation, and nature of service, nor did they differentiate between ocean-going tugboats and inland towboats. We carefully considered these comments and decided to implement the lower-cost, non-controversial measures in an interim rule, separate from any requirements for fixed fire-extinguishing systems. This final rule makes a few changes to the interim rule for the non-controversial measures, based on public comments, as discussed below. Again, all requirements for fixed fire-extinguishing systems are the subjects of a separate rulemaking; this will take the form of a SNPRM on fire-suppression systems and voyage planning for towing vessels, which we will publish later this year.

Discussion of Comments and Changes

The Coast Guard received a total of 17 documents containing 95 comments to the public docket of the interim rule that precedes this final rule. The following paragraphs summarize the comments and explain the changes we have made to that interim rule.

1. Applicability and Exemptions

Three comments asked that the rule change to provide specific details that explain which types of harbor tugs and similar tugs operating within limited geographic areas are exempted from its requirements. We considered these comments and decided to make no change in that respect. 46 CFR 27.100 already clearly explains the reach of this rule. Besides, 46 CFR 27.100(c) permits the owner or operator of any vessel to request an exemption from the local

Captain of the Port (COTP). The local COTP has the most accurate view of local conditions, so he or she is better suited to making a fair determination of the safety of a particular vessel.

2. Fixed Fire-Extinguishing System

Eight comments provided arguments both pro and con on the need for a fixed fire-extinguishing system for the protection of towing vessels' engine rooms. This issue is the subject of a separate rulemaking, the SNPRM on fire-suppression systems mentioned twice earlier. These comments, too, have not resulted in any changes to this final rule.

3. General Alarm

Several comments expressed the opinion that requiring weekly tests of a general alarm is excessive, and that such tests should be a part of the monthly fire drills. We disagree. The general alarm is an emergency safety system; as such, it must be functional at all times. Weekly testing of the alarm is consistent with our rules for inspected vessels and provides a high degree of confidence that the alarm will operate when needed.

4. Fire Detection

Numerous comments concerned § 27.210(f), which requires that the fire-detection system not be used for any other purpose. They stated that the rule should let the system be a part of the system for monitoring the engine room. We had received similar comments during the public comment period for the proposed rule. At that time, we had disagreed with the commenters. We had been concerned that the connection of non-emergency equipment to the fire-detection system could introduce a potential for spurious electrical faults that would decrease the reliability of the system. Because of this, the interim rule requires the fire-detection system to be approved by the Coast Guard or listed by an independent laboratory and not be part of any other system. Taking account of the added information received in response to the interim rule, we have reconsidered our position on this issue.

The towing industry has informed us about systems for monitoring engine rooms and about their routine use. These systems, relied upon daily, ensure the operation of the vessel and its engines. They are therefore subject to enhanced maintenance and testing. If a spurious electrical fault were to occur in one, the operator would immediately be aware of it. If one became inoperable, prudent practice would dictate prompt repairs. Because of this, we hold the reliability of these systems adequate for their use in combination with fire-detection systems for engine rooms, as long as: (1) The equipment remains in good working order and (2) the fire detectors are approved for fire-protection service by an independent laboratory. Hence, we have framed the final rule to accept the continued use of existing fire-detection systems that are components of systems for monitoring engine rooms, provided that the detection systems also comply with 46 CFR 27.210(g).

Several other comments sought clarification of paragraph 46 CFR 27.210(d)(2), which requires that the control panel for the fire-detection system include a visible and audible alarm for each zone. The confusion arose over whether the paragraph requires both a separate visible alarm and a separate audible alarm for each zone. It was our intent to require a system that has a common audible alarm to notify the crew of any fire. If the system covers more than one zone, a series of indicator lights on the control panel will identify the zone of origin. This renders a separate audible alarm for each zone unnecessary. We agree that the wording of this requirement in the interim rule could have led to confusion. We have therefore changed the wording to preclude that.

Other comments sought clarification of the technical requirements of 46 CFR 27.210. We made no changes in response to these comments, which we summarize below:

46 CFR 27.210(e)—The requirement that the fire-detection system draw power from two sources. Several comments questioned the need for two separate sources of power. For reliability, such a system will have a backup source of power in case either the main generator fails or a break in the circuitry occurs. The system commonly achieves redundancy by switchover of the primary source to a small 12-volt battery located in the control panel. The comment observed that on a towing vessel the loss of primary power would be immediately noticed and corrected. We agree with this viewpoint; however, there may be instances when the vessel has primary power available to most parts of the vessel but when the branch of the electrical distribution system that supplies the alarm system is nonetheless unavailable. For such instances, it is necessary to provide an alternative supply of power from a battery to maintain detection capability.

46 CFR 27.210(g)—The requirement that the fire-detection system be certified to meet the rule by a professional engineer or a classification society. A number of comments questioned the reliance on an outside expert to certify the condition of the system. We called for this reliance to ensure that there is a thorough, knowledgeable, and professional review and inspection of the system. The Coast Guard does not routinely examine towing vessels. We feel that early warning of fire in the engine room is extremely important to the overall safety of such vessels. Because many such vessels already have installed systems, we decided to allow their continued use as long as they meet a minimum level of safety. This spares owners of vessels the expense of replacing their existing systems with new ones. Because we have decided to accept existing systems, we believe it essential that qualified persons evaluate the condition of the systems. Several comments insisted that marine electricians would be sufficiently competent to inspect and certify existing systems. We do not fully agree. We know of no training or certification for electricians that includes experience in the proper placement of fire detectors. Yet the installation of the detectors is crucial in the performance of the systems. For example, if the detectors are too close to ventilation outlets or too far beneath the overhead, they may never provide timely warning of fire. Because of the complexity of the guidelines for installing detectors, we have not weakened the requirement for certification.

46 CFR 27.210(d)(1)—The requirement for a power-available light. This part of the rule requires that a light on the control panel be illuminated whenever power is connected to the system. Some comments stated that the arrangement or function of this light needed explaining. We do not agree. The term ''power-available light'' is a common one, used throughout the fire-detection industry as well as elsewhere. It simply identifies a light on the control panel that indicates the presence of voltage at the point of connection to the system. We have not revised the wording of the rule.

5. Internal Communications

Several comments maintained that we should eliminate the exemption for twin-screw vessels (with operating-station control for both engines) afforded in 46 CFR 27.215(b) and require internal-communication systems on all vessels. We require these systems in the interim rule to be consistent with existing rules for inspected vessels: We saw no reason to hold uninspected towing vessels to a higher standard than inspected ones. We still see none, and

have not eliminated this exemption from the final rule.

Another comment urged us to require dedicated VHF radios for the internal-communication system. It argued that relying on the same radios used for day-to-day operation of the vessel would leave the availability and operability of the radios questionable. We do not agree. On the contrary, we expect radios used daily to be more likely to be fully charged and ready for use when needed.

6. Fuel Shut-off Valves

A number of comments requested that we change the requirement for fuel shut-off valves set forth in 46 CFR 27.340(f). That requirement, derived from the interim rule, states that any fuel line subject to internal head pressure from the fuel in a tank must be provided with a remotely operable fuel shut-off valve. It was our intent to require a means to stop the main supply of fuel to the engine room during a fire, because our casualty data showed that failures of fuel lines and flexible hoses are among the leading causes of fires in engine rooms of towing vessels. Fuel leaking and spraying from gravity tanks significantly increases the magnitude of these fires and makes these fires almost impossible to extinguish without outside assistance. It was our further intent, therefore, to require a single shut-off valve located at the outlet of the day tank. The comments from the towing industry, however, pointed out that many towing vessels are configured with day tanks and multiple fuel tanks capable of pressurizing fuel lines by gravity flow, and thus would need multiple shut-off valves. They argued that there is no valid safety benefit to installing shut-off valves on all of these tanks. They reported not only that engineers often transfer fuel among tanks to adjust vessels' trim but that they transfer it manually with valves on fuel-transfer manifolds in the engine rooms. The valves open solely during transfers. The fuel ultimately enters a day tank, which then supplies the engines and generators. As written, the interim rule is interpreted by some to require a separate shut-off valve for each tank connected to the manifold. Our review of casualty reports showed that, while failure of fuel lines and fittings on diesel engines occurred in a significant number of cases, failure of piping connected directly to tanks and manifolds did not significantly contribute to the fire hazard. We conclude from the reports and the public comments that the measures required in the interim rule need not apply to all tanks. Only a fuel line directly supplying an engine (or generator) needs a remotely operable positive shut-off valve. We agree with the comments. We have therefore framed the final rule to clearly explain that we require a shut-off valve only on a line from the day tank, a storage tank, or a manifold that supplies fuel directly to an engine or generator. We expect you to install remote shut-off valves as follows:

- If you have a day tank supplying fuel, install the shut-off valve at the day tank;
- If you have a fuel-distribution manifold only (no day tank), install the shut-off valve in the single fuel-supply line after (downstream of) the manifold; or
- If you have a fuel tank directly supplying an engine or a generator, without the use of a day tank, a storage tank, or a fuel-distribution manifold, install the shut-off valve at the fuel tank.

7. Fuel Systems

One comment noted that a reader could misinterpret 46 CFR 27.340(d) to require the fitting of each fuel tank with a vent pipe connected to the highest point of the tank and venting on the weather deck. The commenter argued that this would prevent the operator of a towing vessel from leading a common vent pipe from two or more fuel tanks. This was not the intent. The individual vent pipes from several fuel tanks containing liquids in the same class of hazards may connect to a header venting on the weather deck, as long as the piping arrangements and diameters are adequate to prevent damage to the tanks from over- and under-pressurization. We have added a new sentence to this paragraph to clarify this.

Another comment insisted that subparagraphs 27.340(d)(2)(i) and 27.340(d)(2)(ii) fail to clarify which of their two standards for vent pipes applies, and suggested that we add the words ''whichever is greater''. We do not agree. The two standards apply to two different situations. 46 CFR 27.340(d)(2)(i) contains the standard for a tank filled under gravity head, as from a marine fuel station with a dispensing nozzle. Section 27.340(d)(2)(ii) contains the standard for a tank filled with fuel pumped aboard (under pressure) through a connected length of fuel-transfer hose. The commenter also suggested that we adopt the rules of the American Bureau of Shipping (ABS) for sizing tank vents. We have not adopted these rules, as they exceed what we consider acceptable. Of course, an operator may choose to adopt the ABS rules or apply another higher standard.

8. Training and Drills

A number of comments requested a reduction in the frequency of required training and drills. We disagree, for the reasons that follow. Commercial vessels, if they require fire drills at all, adhere to a monthly schedule. We have required such drills monthly to familiarize crewmembers with the hazards, and with the safety equipment installed, onboard their vessels. In the towing industry, it is not uncommon to have a high rate of crew transfers. Crewmembers may be aboard vessels just for brief periods, or may rotate assignments among several vessels. They must receive training and drills in fire safety fairly often.

We received comments that indicate some in the industry may have mis-interpreted the interim rule on training and drills. Our intent was never to require such formal fire-fighting training as would be necessary for licensing. The required monthly training is for response to emergencies that might occur aboard crewmembers' particular vessels. The training should familiarize them with the safety equipment installed aboard their vessels, and with the locations of the vessels' controls for fuel and ventilation systems. It should also provide instructions on how to operate all of the installed fire-fighting equipment.

Another group of comments noted that monthly drills would be pointlessly burdensome to the industry if they entailed the discharge of portable and semi-portable fire extinguishers. This was not our intent. 46 CFR 27.355(c)(2) specifies that the drills must include ''breaking out and using emergency equipment.'' It aims at crewmembers'' mustering the equipment and bringing it to the site of the drill. We do not require the actual release of extinguishing agents during the drills: The drill instructor can demonstrate the proper operation of the equipment without discharging the extinguishers. The drills should familiarize the crewmembers with the location of the emergency equipment and the difficulties that they may encounter in employing it.

9. Safety Orientation

One commenter made the point that not all crew transfers take place while the vessel is docked. The requirement in 46 CFR 27.355(d) to provide safety orientation to new crewmembers ''before the vessel gets underway'' therefore cannot be met in all cases. We agree with this comment and have framed the paragraph to require, instead, the safety orientation for new crewmembers within 24 hours.

Regulatory Evaluation

This final rule is not a significant regulatory action under section 3(f) of Executive Order 12866 and does not require an assessment of potential costs and benefits under section 6(a)(3) of that Order. It has not been reviewed by the Office of Management and Budget (OMB) under that Order.

A Regulatory Assessment under paragraph 10e of the regulatory policies and procedures of DOT is available in the docket for inspection or copying where indicated under **ADDRESSES.**

Unfunded Mandates Reform Act

Title II of the Unfunded Mandates Reform Act of 1995 (UMRA) [Pub L. 104–4, 109 Stat. 48] requires Federal agencies to assess the effects of certain regulatory actions on State, local, and tribal governments, and the private sector. Under sections 202 and 205 of the UMRA, the Coast Guard generally must prepare a written statement of economic and regulatory alternatives for proposed and final rules that contain Federal mandates. A ''Federal mandate'' is a new or added enforceable duty, imposed on any State, local, or tribal government, or the private sector. If any Federal mandate causes any of those entities to spend, in the aggregate, $100 million or more in any one year, an analysis under the UMRA is necessary. The total burden of Federal mandates imposed by this final rule will not result in such an expenditure. Therefore, sections 202 and 205 of the UMRA do not apply.

Taking of Private Property

This final rule does not effect a taking of private property or otherwise have implications for taking under Executive Order 12630, Governmental Actions and Interference with Constitutionally Protected Property Rights.

Civil Justice Reform

This final rule meets applicable standards in sections 3(a) and 3(b)(2) of Executive Order 12988, Civil Justice Reform, to minimize litigation, eliminate ambiguity, and reduce burden.

Protection of Children

We have analyzed this final rule under Executive Order 13045, Protection of Children from Environmental Health Risks and Safety Risks. This rule is not an economically significant rule and does not concern an environmental risk to health or risk to safety that may disproportionately affect children.

Small Entities

Under the Regulatory Flexibility Act [5 U.S.C. 601 *et seq.*], the Coast Guard considers the economic impact on small entities of each rule for which a general notice of proposed rulemaking is required. ''Small Entities'' include small businesses, not-for-profit organizations that are independently owned and operated and are not dominant in their fields, and governmental jurisdictions with populations of less than 50,000.

An assessment of this final rule's impacts on small entities appears in the regulatory assessment. It is available in the docket for inspection or copying where indicated under **ADDRESSES.**

Assistance for Small Entities

Under section 213(a) of the Small Business Regulatory Enforcement Fairness Act of 1996 (Pub. L. 104–121), the Coast Guard wants to assist small entities in understanding this final rule so that they can better evaluate its effects on them. If your small business or organization is affected by this rule and you have questions concerning its provisions or options for compliance, please call Mr. Randall Eberly, telephone 202–267–1861.

The Small Business and Agriculture Regulatory Enforcement Ombudsman and 10 Regional Fairness Boards were established to receive comments from small businesses about enforcement by Federal agencies. The Ombudsman will annually evaluate the enforcement activities and rate each agency's responsiveness to small business. If you wish to comment on enforcement by the Coast Guard, call 1–888–REG–FAIR (1–888–734–3247).

Collection of Information

This final rule does not provide for a collection of information under the Paperwork Reduction Act of 1995 [44 U.S.C. 3501 *et seq.*]. It does require standard wording to appear on each general alarm bell and flashing red light. This wording is to inform crewmembers that when the general alarm bell sounds, or the red light flashes, they should proceed to their assigned stations. This labeling is exempt from the guidelines of OMB for collection and posting of information since it furnishes exact wording.

Federalism

We analyzed this final rule under Executive Order 13132, Federalism. It is well-settled that States are precluded from regulating in the categories reserved for regulation by the Coast Guard. [*United States* v. *Locke*, 120 S. Ct. 1135 (March 6, 2000).] It is also well-settled that, in the case of uninspected towing vessels, if the Coast Guard promulgates rules dealing with design, construction, equipment, or operation, State regulation in those areas is preempted. [*Kelly* v. *Washington*, 302 U.S. 1 (1937); *Ray* v. *Atlantic Richfield Co.*, 435 U.S. 151 (1979).] The statutory authorities under which we promulgate this rule mandate our action for inspected towing vessels and for any towing vessels towing non-self-propelled tank vessels [46 U.S.C. 3306(a)(3) and 4102(f)(2)], and give us discretionary authority for all other towing vessels [46 U.S.C. 4102(f)(1)]. In any event, the preemptive impact of the Coast Guard's action in this rulemaking is the same. This entire rule falls into the previously-mentioned categories of rules. Because States are precluded from regulating within these categories, preemption is not an issue under Executive Order 13132. Accordingly, the Coast Guard regards the Federalism implications of this rule as minimal.

Environment

The Coast Guard considered the environmental impact of this final rule and concluded that under Figure 2–1, paragraphs (34)(c) and (d) of Commandant Instruction M16475.1C, this rule is categorically excluded from further environmental documentation. A ''Determination of Categorical Exclusion'' is available in the docket for inspection or copying where indicated under **ADDRESSES.**

List of Subjects in 46 CFR Part 27

Fire prevention, Marine safety, Reporting and recordkeeping requirements, Vessels.

For the reasons discussed in the preamble, the Coast Guard adopts the interim rule published on October 19, 1999 (64 FR 56257) as final with the following changes:

PART 27—TOWING VESSELS

1. The citation of authority for part 27 continues to read as follows:

Authority: 46 U.S.C. 3306, 4102 (as amended by Pub. L. 104–324, 110 Stat. 3947); 49 CFR 1.46.

2. Revise § 27.210 to read as follows:

§ 27.210 What are the requirements for fire detection on an existing towing vessel?

By October 8, 2001, there must be a fire-detection system installed on your vessel to detect engine-room fires. It may be a new system, an existing fire-detection system, or an existing engine-room-monitoring system (with fire-detection capability), if it is operable and complies with this section. You must ensure that—

(a) Each detector, each control panel, and each fire alarm are approved under 46 CFR subpart 161.002 or listed by an independent testing laboratory; except that, if you use an existing engine-room-monitoring system (with fire-detection capability), each detector must be listed by an independent testing laboratory;

(b) The system is installed, tested, and maintained in line with the manufacturer's design manual;

(c) The system is arranged and installed so a fire in the engine room automatically sets off alarms on a control panel at the operating station;

(d) The control panel includes—

(1) A power-available light;

(2) An audible alarm to notify crew at the operating station of fire and visible alarms to identify the zone or zones of origin of the fire;

(3) A means to silence audible alarms while maintaining indication by visible alarm;

(4) A circuit-fault detector test-switch; and

(5) Labels for all switches and indicator lights, indicating their functions;

(e) The system draws power from two sources, switchover from the primary power source to the secondary source being either manual or automatic;

(f) The system serves no other purpose, unless it is an existing engine-room-monitoring system (with fire-detection capability); and

(g) The system is certified by a Registered Professional Engineer, or by a recognized classification society (under 46 CFR part 8), to comply with paragraphs (a) through (f) of this section.

3. Revise paragraphs (c) and (d)(2) of § 27.310 to read as follows:

§ 27.310 What are the requirements for fire detection on a new towing vessel?

* * * * *

(c) The system is arranged and installed so a fire in the engine room automatically sets off alarms on a control panel at the operating station;

* * * * *

(d) * * *

(2) An audible alarm to notify crew at the operating station of fire and visible alarms to identify the zone or zones of origin of the fire;

* * * * *

4. Revise paragraphs (d) and (f) of § 27.340 to read as follows:

§ 27.340 What are the requirements for a fuel system on a new towing vessel?

* * * * *

(d) *Vent pipes for integral fuel tanks.* Each integral fuel tank must meet the requirements of this paragraph as follows:

(1) Each fuel tank must have a vent that connects to the highest point of the tank, discharges on a weather deck through a bend of 180 degrees (3.14 radians), and is fitted with a 30-by-30 mesh corrosion-resistant flame screen. Vents from two or more fuel tanks may combine in a system that discharges on a weather deck.

(2) The net cross-sectional area of the vent pipe for the tank must be—

(i) Not less than 312.3 square millimeters (0.484 square inches) for any tank filled by gravity; or

(ii) Not less than that of the fill pipe for any tank filled under pressure.

* * * * *

(f) A positive shut-off valve must be fitted on any fuel line that supplies fuel directly to an engine or generator to stop the flow of fuel in the event of a break in the fuel line. The valve must be located near the source of supply (for instance, at the day tank, storage tank, or fuel-distribution manifold). Furthermore, the positive shut-off valve must be operable from a safe place outside the space in which the valve is located. Each remote station for fuel shut-off should be marked in clearly legible letters at least 25 millimeters (1 inch) high indicating the purpose of the valve and the way to operate it.

* * * * *

5. Revise paragraphs (c) and (d) of § 27.355 to read as follows:

§ 27.355 What are the requirements for instruction, drills, and safety orientations conducted on a new towing vessel?

* * * * *

(c) *Participation in drills.* Drills must take place on board the vessel, as if there were an actual emergency. They must include—

(1) Participation by all crewmembers;

(2) Breaking out and using, or simulating the use of, emergency equipment;

* * * * *

(d) *Safety Orientation.* The master or person in charge of a vessel must ensure that each crewmember who has not both participated in the drills required by paragraph (a) of this section and received the instruction required by that paragraph receives a safety orientation within 24 hours of reporting for duty.

* * * * *

Dated: August 2, 2000.

R.C. North,

Assistant Commandant for Marine Safety and Environmental Protection.

[FR Doc. 00–21888 Filed 8–23–00; 4:45 pm]

BILLING CODE 4910–15–U

FEDERAL COMMUNICATIONS COMMISSION

47 CFR Part 64

[CC Docket No. 98–170; FCC 00–111]

Truth-in-Billing and Billing Format

AGENCY: Federal Communications Commission.

ACTION: Final rule; announcement of effective date.

SUMMARY: This document announces the effective date of the amendments to rules regarding Truth-in-Billing and Billing Format to ensure that telephone bills contain information necessary for consumers to determine the validity of charges assessed on the bills and to combat telecommunications fraud. Some of the rules contained information collection requirements. The rule amendments become effective on August 28, 2000.

DATES: The amendments to 47 CFR 64.2401(a), (d), and (e) published at 65 FR 43251 (July 13, 2000) become effective on August 28, 2000.

FOR FURTHER INFORMATION CONTACT: Michele Walters, Associate Division Chief, Accounting Policy Division, Common Carrier Bureau, (202) 418–7400.

SUPPLEMENTARY INFORMATION: On March 29, 2000, the Commission adopted an Order in the Truth-in Billing and Billing Format proceeding that granted, in part, petitions for reconsideration of the requirements that telephone bills highlight new service providers and prominently display inquiry contact numbers. The Order modified the Truth-in-Billing and Billing Format rules to ensure that telephone bills contain information necessary for consumers to determine the validity of charges assessed on the bills and to combat telecommunications fraud. In the Order, the Commission also denied all other petitions seeking reconsideration, but provided clarification with respect to certain issues. A summary of the Order was published in the **Federal Register**. See 65 FR 43251 (July 13, 2000). The supplementary information in the summary was corrected in a document published in the **Federal Register**. See 65 FR 45929 (July 26, 2000). The information collections were approved by OMB on July 21, 2000. See OMB No. 3060–0854.

List of Subjects in 47 CFR Part 64

Claims, Communications common carrier, Computer technology, Consumer protection, Reporting and recordkeeping requirements, Telephone.

Federal Communications Commission.

Magalie Roman Salas,

Secretary.

[FR Doc. 00–21980 Filed 8–25–00; 8:45 am]

BILLING CODE 6712–01–P

Proposed Rules

Federal Register
Vol. 65, No. 167
Monday, August 28, 2000

This section of the FEDERAL REGISTER contains notices to the public of the proposed issuance of rules and regulations. The purpose of these notices is to give interested persons an opportunity to participate in the rule making prior to the adoption of the final rules.

NUCLEAR REGULATORY COMMISSION

10 CFR Part 40

Rulemaking and Jurisdictional Working Groups; Uranium and Thorium

AGENCY: Nuclear Regulatory Commission.

ACTION: Notice of working group formation.

SUMMARY: The U.S. Nuclear Regulatory Commission (NRC) is announcing the formation of two working groups regarding its regulatory activities concerning the distribution of source materials and the jurisdictional and technical issues relating to the regulation of materials with low concentrations of uranium and thorium.

DATES: Working group meetings which are open to the public will be announced on the NRC web site, *http://www.nrc.gov/NRC/PUBLIC/meet.html.*

ADDRESSES: Meetings will be held at the Nuclear Regulatory Commission, Two White Flint North, 11545 Rockville Pike, Rockville, Maryland.

FOR FURTHER INFORMATION, CONTACT: Anthony J. DiPalo; e-mail:ajd@nrc.gov, telephone (301) 415–6191, Office of Nuclear Material Safety and Safeguards, USNRC, Washington DC 20555–0001.

SUPPLEMENTARY INFORMATION: The NRC is creating two joint NRC/Agreement State regulatory working groups. One working group will focus on the development of a rulemaking plan to address the distribution of source material [1] to persons exempt from licensing and to general licensees, in a manner intended to make Part 40 more risk-informed. The other working group will focus on jurisdictional and technical issues regarding the regulation of materials with low concentrations of uranium and thorium.

The Rulemaking Working Group will also be considering options to resolve issues raised in a Petition for Rulemaking (PRM–40–27) submitted to NRC by the State of Colorado and the Organization of Agreement States. The petitioner requested that NRC regulations governing small quantities of source material be amended to eliminate the exemption for source-material general licensees from the requirements that specify standards of protection against radiation and notification and instruction of individuals who participate in licensed activities. This working group will be composed of NRC and State representatives. A rulemaking plan is currently scheduled to be submitted to the Commission no later than March 2001.

The Jurisdictional Working Group will explore, along with the States, the Environmental Protection Agency, and the Occupational Safety and Health Administration, the best approach to delineate the responsibilities of NRC and other agencies regarding materials with low concentrations of uranium and thorium [10 CFR 40.13(a)]. The Jurisdictional Working Group will consult with the Departments of Energy, Interior, and Transportation, and the Army Corps of Engineers. This Working Group will develop a charter describing its activities and the approach that it will use to work toward delineating future Agency regulatory responsibilities. A status report of the working group activities and a plan for how to proceed are currently scheduled to be submitted to the Commission no later than March 2001.

Working group meetings will begin in early September and continue through November. Meeting dates and times, for those meetings which are open to the public, will be announced on the NRC public meeting web site, http://www.nrc.gov/NRC/PUBLIC/meet.html. In general, these meetings will be open for observation but, opportunity for public statements will be provided, as time permits. For planning purposes, observers from the public are requested to notify Roberta Gordon at (301) 415–7555, if they plan to attend.

Dated at Rockville, Maryland, this 22nd day of August 2000.

For the Nuclear Regulatory Commission.

Patricia K. Holahan,

Chief, Rulemaking and Guidance Branch, Division of Industrial and Medical Nuclear Safety, NMSS.

[FR Doc. 00–21887 Filed 8–25–00; 8:45 am]

BILLING CODE 7590–01–P

[1] Source Material (10 CFR 40.4): (1) Uranium or thorium, or any combination thereof, in any physical or chemical form or (2) ores which contain by weight one-twentieth of one percent (0.05%) or more of (i) Uranium, (ii) thorium or (iii) any combination thereof. Source material does not include special nuclear material.

DEPARTMENT OF TRANSPORTATION

Federal Aviation Administration

14 CFR Part 39

[Docket No. 2000–NM–39–AD]

RIN 2120–AA64

Airworthiness Directives; Boeing Model 737–300, –400, and –500 Series Airplanes

AGENCY: Federal Aviation Administration, DOT.

ACTION: Notice of proposed rulemaking (NPRM).

SUMMARY: This document proposes the adoption of a new airworthiness directive (AD) that is applicable to all Boeing Model 737–300, –400, and –500 series airplanes.

This proposal would require repetitive inspections of certain connectors located in the main wheel wells to detect discrepancies; and corrective action, if necessary. This action is necessary to detect and correct such discrepancies, which could result in electrical arcing of the connectors, uncommanded closure of the engine fuel shut-off valves, and consequent in-flight loss of thrust or engine shutdown from lack of fuel. This action is intended to address the identified unsafe condition.

DATES: Comments must be received by October 12, 2000.

ADDRESSES: Submit comments in triplicate to the Federal Aviation Administration (FAA), Transport Airplane Directorate, ANM–114, Attention: Rules Docket No. 2000–NM–39–AD, 1601 Lind Avenue, SW., Renton, Washington 98055–4056. Comments may be inspected at this location between 9:00 a.m. and 3:00 p.m., Monday through Friday, except Federal holidays. Comments may be submitted via fax to (425) 227–1232. Comments may also be sent via the Internet using the following address: 9-

anm-nprmcomment@faa.gov. Comments sent via fax or the Internet must contain ''Docket No. 2000–NM–39–AD'' in the subject line and need not be submitted in triplicate. Comments sent via the Internet as attached electronic files must be formatted in Microsoft Word 97 for Windows or ASCII text.

The service information referenced in the proposed rule may be obtained from Boeing Commercial Airplane Group, P.O. Box 3707, Seattle, Washington 98124–2207. This information may be examined at the FAA, Transport Airplane Directorate, 1601 Lind Avenue, SW., Renton, Washington.

FOR FURTHER INFORMATION CONTACT: Stephen Oshiro, Aerospace Engineer, Systems and Equipment Branch, ANM–130S, FAA, Seattle Aircraft Certification Office, 1601 Lind Avenue, SW., Renton, Washington 98055–4056; telephone (425) 227–2793; fax (425) 227–1181.

SUPPLEMENTARY INFORMATION:

Comments Invited

Interested persons are invited to participate in the making of the proposed rule by submitting such written data, views, or arguments as they may desire. Communications shall identify the Rules Docket number and be submitted in triplicate to the address specified above. All communications received on or before the closing date for comments, specified above, will be considered before taking action on the proposed rule. The proposals contained in this notice may be changed in light of the comments received.

Submit comments using the following format:

- Organize comments issue-by-issue. For example, discuss a request to change the compliance time and a request to change the service bulletin reference as two separate issues.
- For each issue, state what specific change to the proposed AD is being requested.
- Include justification (e.g., reasons or data) for each request.

Comments are specifically invited on the overall regulatory, economic, environmental, and energy aspects of the proposed rule. All comments submitted will be available, both before and after the closing date for comments, in the Rules Docket for examination by interested persons. A report summarizing each FAA-public contact concerned with the substance of this proposal will be filed in the Rules Docket.

Commenters wishing the FAA to acknowledge receipt of their comments submitted in response to this notice must submit a self-addressed, stamped postcard on which the following statement is made: ''Comments to Docket Number 2000–NM–39–AD.'' The postcard will be date stamped and returned to the commenter.

Availability of NPRMs

Any person may obtain a copy of this NPRM by submitting a request to the FAA, Transport Airplane Directorate, ANM–114, Attention: Rules Docket No. 2000–NM–39–AD, 1601 Lind Avenue, SW., Renton, Washington 98055–4056.

Discussion

The FAA has received reports indicating engine shutdown during flight due to uncommanded movement of the engine shutoff valve on three Model 737 series airplanes. Investigation revealed that connectors located in certain disconnect panels had burned and were damaged, and the printed circuit cards located in the fuel system module were also damaged. Examination of connectors and cards returned to the manufacturer indicated that a short occurred between the contacts for the outboard landing lights and the contacts for the fuel shut-off valve mounted on the wing rear spar. In one incident the spare contacts and filler rods normally installed in the unused cavities of the connectors were not installed, creating a path for contamination to enter the connectors through the open, unused cavities. However, the absence of spare contacts and filler rods cannot be verified as the single cause of the contamination. Therefore, the FAA has determined that the contamination also could occur when the connectors are properly fitted with spare contacts and filler rods. Such conditions, if not detected and corrected, could result in electrical arcing of the connectors, uncommanded closure of the engine fuel shut-off valves, and consequent in-flight loss of thrust or engine shutdown from lack of fuel.

Explanation of Relevant Service Information

The FAA has reviewed and approved Boeing Service Letter 737-SL–24–138, dated May 24, 1999, which describes procedures for inspections of certain connectors (connectors are linked to the fuel shut-off valves and outboard landing lights) located in the main wheel wells, to detect discrepancies including missing spare contacts and filler rods, improper plugs or filler rods, or contamination or corrosion of the connectors. If any discrepancies are found, the service letter references Boeing Standard Wiring Practices Manual D6–54446, Subject 20–60–01, for cleaning corroded or contaminated wiring; Subject 20–61–11, for installing spare contacts in the connectors; and Subject 20–60–08, for installing filler rods in the connectors.

Explanation of Requirements of Proposed Rule

Since an unsafe condition has been identified that is likely to exist or develop on other products of this same type design, the proposed AD would require accomplishment of the actions specified in the service letter described previously, except as discussed below.

Differences Between Service Letter and This Proposed AD

Operators should note that, although the service letter does not specify the type of inspection of the connectors to detect contamination or missing spare contacts and filler rods, this proposed AD would require a detailed visual inspection for accomplishment of the actions. A note has been included in this proposed rule to define that inspection.

Operators also should note that this proposed AD would require the detailed visual inspection be accomplished within 12 months after the effective date of the AD, and repeated at 18-month intervals thereafter. The service letter identifies a one-time inspection at ''the next convenient maintenance opportunity.'' In developing an appropriate compliance time for this proposed AD, the FAA considered the degree of urgency associated with addressing the subject unsafe condition, the average utilization of the affected fleet, and the time necessary to perform the inspection (approximately 1 hour). In light of all of these factors, the FAA finds a 12-month compliance time for the initial inspection, and an 18-month repetitive inspection interval, to be warranted, in that those times represent appropriate intervals for affected airplanes to continue to operate without compromising safety.

While Boeing Service Letter 737–SL–24–138 limits its effectivity to Model 737–300, –400, and –500 series airplanes having line numbers prior to 3095, this proposed AD would be applicable to all Model 737–300, –400, and –500 series airplanes. In light of the fact that the exact cause of the contamination entering the connectors for the engine fuel shut-off valves mounted on the wing rear spar and for the outboard landing lights is as yet undetermined, and may be caused by spare contacts and filler rods that fall out or leak during service or by connectors that are properly fitted with

spare contacts and filler rods, the FAA has determined that all airplanes, as stated above, must accomplish the requirements of this proposed AD.

Cost Impact

There are approximately 1,974 Model 737 series airplanes of the affected design in the worldwide fleet. The FAA estimates that 755 airplanes of U.S. registry would be affected by this proposed AD, that it would take approximately 1 work hour per airplane to accomplish the proposed inspection, and that the average labor rate is $60 per work hour. The cost of required parts would be negligible. Based on these figures, the cost impact of the proposed AD on U.S. operators is estimated to be $45,300, or $60 per airplane, per inspection cycle.

The cost impact figure discussed above is based on assumptions that no operator has yet accomplished any of the proposed requirements of this AD action, and that no operator would accomplish those actions in the future if this proposed AD were not adopted. The cost impact figures discussed in AD rulemaking actions represent only the time necessary to perform the specific actions actually required by the AD. These figures typically do not include incidental costs, such as the time required to gain access and close up, planning time, or time necessitated by other administrative actions.

Regulatory Impact

The regulations proposed herein would not have a substantial direct effect on the States, on the relationship between the national Government and the States, or on the distribution of power and responsibilities among the various levels of government. Therefore, it is determined that this proposal would not have federalism implications under Executive Order 13132.

For the reasons discussed above, I certify that this proposed regulation (1) is not a ''significant regulatory action'' under Executive Order 12866; (2) is not a ''significant rule'' under the DOT Regulatory Policies and Procedures (44 FR 11034, February 26, 1979); and (3) if promulgated, will not have a significant economic impact, positive or negative, on a substantial number of small entities under the criteria of the Regulatory Flexibility Act. A copy of the draft regulatory evaluation prepared for this action is contained in the Rules Docket. A copy of it may be obtained by contacting the Rules Docket at the location provided under the caption **ADDRESSES.**

List of Subjects in 14 CFR Part 39

Air transportation, Aircraft, Aviation safety, Safety.

The Proposed Amendment

Accordingly, pursuant to the authority delegated to me by the Administrator, the Federal Aviation Administration proposes to amend part 39 of the Federal Aviation Regulations (14 CFR part 39) as follows:

PART 39—AIRWORTHINESS DIRECTIVES

1. The authority citation for part 39 continues to read as follows:

Authority: 49 U.S.C. 106(g), 40113, 44701.

§ 39.13 [Amended]

2. Section 39.13 is amended by adding the following new airworthiness directive:

Boeing: Docket 2000–NM–39–AD.

Applicability: All Model 737–300, –400, and –500 series airplanes; certificated in any category.

Note 1: This AD applies to each airplane identified in the preceding applicability provision, regardless of whether it has been modified, altered, or repaired in the area subject to the requirements of this AD. For airplanes that have been modified, altered, or repaired so that the performance of the requirements of this AD is affected, the owner/operator must request approval for an alternative method of compliance in accordance with paragraph (b) of this AD. The request should include an assessment of the effect of the modification, alteration, or repair on the unsafe condition addressed by this AD; and, if the unsafe condition has not been eliminated, the request should include specific proposed actions to address it.

Compliance: Required as indicated, unless accomplished previously.

To detect and correct discrepancies of certain connectors, which could result in electrical arcing of the connectors, uncommanded movement of the engine fuel shut-off valves to the closed position, and consequent in-flight loss of thrust or engine shutdown from lack of fuel, accomplish the following:

Repetitive Inspections/Corrective Action

(a) Within 12 months after the effective date of this AD: Perform a detailed visual inspection of connectors (connectors are linked to the fuel shut-off valves and outboard landing lights) located in the main wheel wells, to detect discrepancies (missing spare contacts and filler rods, improper plugs or filler rods, or contamination or corrosion), as specified in Boeing Service Letter 737–SL–24–138, dated May 24, 1999. Repair any discrepancies in accordance with the service letter, and repeat the inspection thereafter at intervals not to exceed 18 months.

Note 2: For the purposes of this AD, a detailed visual inspection is defined as: An intensive visual examination of a specific structural area, system, installation, or assembly to detect damage, failure, or irregularity. Available lighting is normally supplemented with a direct source of good lighting at intensity deemed appropriate by the inspector. Inspection aids such as mirror, magnifying lenses, etc., may be used. Surface cleaning and elaborate access procedures may be required.''

Alternative Methods of Compliance

(b) An alternative method of compliance or adjustment of the compliance time that provides an acceptable level of safety may be used if approved by the Manager, Seattle Aircraft Certification Office (ACO), FAA. Operators shall submit their requests through an appropriate FAA Principal Maintenance Inspector, who may add comments and then send it to the Manager, Seattle ACO.

Note 3: Information concerning the existence of approved alternative methods of compliance with this AD, if any, may be obtained from the Seattle ACO.

Special Flight Permit

(c) Special flight permits may be issued in accordance with sections 21.197 and 21.199 of the Federal Aviation Regulations (14 CFR 21.197 and 21.199) to operate the airplane to a location where the requirements of this AD can be accomplished.

Issued in Renton, Washington, on August 22, 2000.

Donald L. Riggin,

Acting Manager, Transport Airplane Directorate, Aircraft Certification Service.

[FR Doc. 00–21872 Filed 8–25–00; 8:45 am]

BILLING CODE 4910–13–P

COMMODITY FUTURES TRADING COMMISSION

17 CFR Part 1

RIN 3038–AB54

Minimum Financial Requirements for Futures Commission Merchants and Introducing Brokers; Amendment to the Capital Charge on Unsecured Receivables Due From Foreign Brokers

AGENCY: Commodity Futures Trading Commission.

ACTION: Proposed rule.

SUMMARY: The Commodity Futures Trading Commission (''Commission'') is proposing to amend Rule 1.17(c)(5)(xiii) which requires a futures commission merchant (''FCM'') or an independent introducing broker (''IBI''), when computing its adjusted net capital, to take a capital charge for certain unsecured receivables due from foreign brokers.[1] The capital charge is equal to five percent of the unsecured receivable

[1] Commission regulations cited herein may be found at 17 CFR Ch. I (2000).

balance. In computing the capital charge, however, the FCM or IBI may exclude that portion of the unsecured receivable that represents the amount required to be on deposit to maintain futures and option positions (*i.e.,* margin or performance bond requirements) on a foreign board of trade provided that certain conditions are met. The foreign broker must have received confirmation of ''comparability relief'' pursuant to Rule 30.10 from the Commission and the margin deposit must be held by the foreign broker itself, by another foreign broker granted Rule 30.10 ''comparability relief,'' or by a depository in the same jurisdiction as either foreign broker that would qualify as a depository for funds under Rule 30.7. In addition, to be exempt from the capital charge, customer funds must be held by the foreign broker in compliance with any conditions imposed by the applicable Rule 30.10 order.

The proposal would amend the current rule by increasing the amount of the unsecured receivable that is eligible to be exempt from the capital charge from the minimum amount required to maintain futures and option positions to the greater of: 150 percent of the amount required to maintain the current futures and option positions in the account; or 100 percent of the greatest amount required to support futures and option positions in the account at any time during the preceding six-month period. The proposal also would continue to require the foreign broker to receive Rule 30.10 ''comparability relief'' but would not condition the exemption on the margin deposits be held by the foreign broker itself, another foreign broker granted Rule 30.10 ''comparability relief,'' or with a depository in the same jurisdiction as either foreign broker that would qualify as a depository for funds under Rule 30.7.

DATES: Comments must be received on or before September 27, 2000.

ADDRESSES: Comments should be mailed to: Jean A. Webb, Secretary, Commodity Futures Trading Commission, Three Lafayette Centre, 1155 21st Street, N.W., Washington, D.C. 20581. In addition, comments may be sent by facsimile to (202) 418–5521, or by electronic mail to *secretary@cftc.gov.* Reference should be made to ''Capital Charge on Unsecured Receivables Due from Foreign Brokers.''

FOR FURTHER INFORMATION CONTACT: Thomas J. Smith, Special Counsel, Division of Trading and Markets, Commodity Futures Trading Commission, Three Lafayette Centre, 1155 21st Street, N.W., Washington, D.C. 20581; telephone (202) 418–5495; electronic mail *tsmith@cftc.gov*; or Henry J. Matecki, Financial Audit and Review Branch, Division of Trading and Markets, Commodity Futures Trading Commission, 300 South Riverside Plaza, Suite 1600 North, Chicago, IL 60606; telephone (312) 886–3217; electronic mail *hmatecki@cftc.gov.*

SUPPLEMENTARY INFORMATION:

I. Background

In 1978, the Commission implemented major revisions to its regulations governing the minimum financial requirements for FCMs.[2] As part of these revisions, the Commission adopted Rule 1.17(c)(5)(xiii) which required an FCM, in computing its adjusted net capital, to take a capital charge for unsecured receivables resulting from commodity futures and option transactions executed on foreign boards of trade and which were due from foreign brokers that were not registered with the Commission as FCMs or with the Securities and Exchange Commission (''SEC'') as securities brokers or dealers. The capital charge was equal to five percent of the unsecured receivable balance.

The Commission had minimal interaction with foreign regulators and limited experience with trading on foreign futures and option markets when it adopted Rule 1.17(c)(5)(xiii). The capital charge reflected the Commission's concern that unsecured receivables from foreign brokers represented a greater risk to an FCM's financial condition than comparable receivables due from registered FCMs or securities brokers or dealers which, under Commission and SEC capital rules, are required to maintain sufficient liquid assets to cover liabilities associated with funds received to maintain or carry futures and option positions on foreign boards of trade.

Subsequently, the Commission gained greater experience with foreign futures and option trading. In this regard, in 1987 the Commission adopted Part 30 of its regulations to govern the domestic offer and sale of futures and option contracts traded on foreign boards of trade.[3] Furthermore, in 1996 the Commission, citing an enhancement of capital standards monitoring and an increased cooperation among regulators globally, amended Rule 1.17(c)(5)(xiii) to exclude from the five percent capital charge that portion of the unsecured receivable that represented amounts required to be on deposit to maintain futures and option positions transacted on foreign boards of trade.[4] Deposits in excess of required margin or performance bond continued to be subject to the capital charge. In addition, to be exempt from the capital charge, the receivable had to be due from a foreign broker that had received confirmation of ''comparability relief'' in accordance with a Commission order issued under Rule 30.10 and the margin deposits had to be held by the foreign broker itself, another foreign broker that had received confirmation of Rule 30.10 ''comparability relief,'' or at a depository that qualified as a depository pursuant to Rule 30.7 and which was located within the same jurisdiction as either foreign broker.[5]

II. Proposal

The Joint Audit Committee (''JAC'') has asked the Commission to amend Rule 1.17(c)(5)(xiii) to expand the capital charge exemption on unsecured receivables from a foreign broker that has received ''comparability relief'' under Rule 30.10, but is not a registered FCM or a registered securities broker or dealer.[6] Specifically, the JAC has asked that the exemption be expanded to include balances in excess of required

[2] 43 FR 39956 (September 8, 1978).

[3] 52 FR 28980 (August 5, 1987). The Part 30 rules generally extended the Commission's existing customer protection requirements for products offered or sold on contract markets in the United States to foreign futures and option products sold to United States customers by foreign firms. Specifically, the Part 30 rules include requirements with respect to registration, risk disclosure, capital adequacy, protection of customer funds, recordkeeping and transaction reporting, sales practices and compliance procedures that are generally comparable to those applicable to transactions conducted on or subject to the rules of U.S. contract markets.

[4] 61 FR 19177, 19184 (May 1, 1996).

[5] Under Rule 30.10 and Appendix A thereto, the Commission may exempt a foreign firm from compliance with certain Commission rules provided that a comparable regulatory system exists in the firm's home country and that certain safeguards are in place to protect U.S. customers, including an information-sharing arrangement between the Commission and the firm's home country regulator or self-regulatory organization (''SRO''). Once the Commission determines that the foreign jurisdiction's regulatory structure offers comparable regulatory oversight, the Commission issues an order granting general relief subject to certain conditions. Foreign firms seeking confirmation of this relief must make certain representations set forth in the Rule 30.10 order issued to the regulator or SRO from the firm's home country. Appendix C to Part 30 lists those foreign regulators and SROs that have been issued a Rule 30.10 order by the Commission.

Rule 30.7(c) sets forth acceptable depositories for funds deposited by U.S. customers with foreign brokers for futures and option trading on foreign boards of trade.

[6] The JAC is comprised of representatives of the audit and compliance departments of the domestic SROs and the National Futures Association. The JAC coordinates the industry's audit and ongoing surveillance activities to promote a uniform framework of self-regulation.

margin deposits. In support of its request, the JAC has stated that FCMs and IBIs generally deposit amounts in excess of required margin with foreign brokers as part of prudent risk management policies. In addition, the JAC has stated that increasing the amount of the deposit subject to the exclusion would allow FCMs to leave more funds on deposit with a foreign broker, thereby reducing costs associated with frequent transfers of funds between an FCM or IBI and a foreign broker. Accordingly, the JAC has asked that the amount exempted from the capital charge be expanded to a ''reasonable amount of funds'' to support the commodity futures and option trading activity conducted through the foreign broker.

The Commission agrees with the JAC in principle and is proposing to amend Rule 1.17(c)(5)(xiii) in this regard. The Commission believes, however, that the phrase ''reasonable amount'' is overly broad and subject to a wide range of interpretation. Therefore, for purposes of Rule 1.17(c)(5)(xiii), the maximum amount eligible for exclusion from the five percent capital charge is proposed to be the greater of: (1) 150 percent of the amount currently required to support futures and option transactions in an account; or (2) 100 percent of the maximum amount required to support futures and option transactions at any time during the preceding six-month period. The Commission believes that the proposed amendment would provide the cash management flexibility that the JAC has requested on behalf of its member FCMs and IBIs without unnecessarily broadening the capital charge exemption. The Commission further believes that the proposal would provide greater legal certainty than the phrase ''reasonable amount.''

The JAC also has asked the Commission to amend Rule 1.17(c)(5)(xiii) to eliminate the requirement that an FCM or IBI be responsible for monitoring the ultimate destination of funds deposited with a foreign broker in order for such funds to be exempt from the capital charge. As set forth above, to be exempt from the capital charge, the funds must be held in accordance with the mandates of the applicable Rule 30.10 order by the foreign broker itself, another foreign broker that has received confirmation of Rule 30.10 ''comparability relief,'' or at a depository that qualifies as a depository pursuant to Rule 30.7 and is within the jurisdiction of either foreign broker. In support of its request, the JAC has stated that requiring FCMs and IBIs to monitor the flow of funds deposited with a foreign broker is impractical from an operational standpoint and overly burdensome.

By granting Rule 30.10 ''comparability relief'' to a foreign broker, the Commission has made a determination that the foreign broker is subject to a regulatory structure that is comparable to the regulatory structure imposed on entities that operate on U.S. exchanges by the Commodity Exchange Act and Commission regulations.[7] Of particular relevance to the relief requested by the JAC, the Commission, as part of the Rule 30.10 petition process, assesses the extent to which a foreign regulator's or SRO's regulatory program imposes bona fide minimum financial requirements on its regulatees or members as well as the protections afforded customers by the segregation of funds and the bankruptcy rules.[8] The Commission's determination that standards and protections exist pursuant to the foreign regulatory structure supports an easing of the capital charge.

Furthermore, the proposed amendments to the capital rule do not alter a foreign broker's obligation to comply with the applicable Rule 30.10 order when dealing with the funds of U.S. customers trading on foreign futures and option markets nor an FCM's or IBI's obligation to comply with applicable provisions of Part 30. Accordingly, the Commission is proposing to amend Rule 1.17(c)(5)(xiii) to eliminate the requirement that, to be exempt from the capital charge, margin deposits must be held by the foreign broker itself, another foreign broker granted Rule 30.10 ''comparability relief,'' or a depository in the same jurisdiction as either foreign broker that qualifies as a depository for funds under Rule 30.7.

III. Related Matters

A. Regulatory Flexibility Act

The Regulatory Flexibility Act (''RFA''), 5 U.S.C. 601–611, requires that agencies, in proposing rules, consider the impact of those rules on small businesses. The rule amendments discussed herein would affect registered FCMs and IBIs. The Commission has previously determined that, based upon the fiduciary nature of FCM/customer relationships, as well as the requirement that FCMs meet minimum financial requirements, FCMs should be excluded from the definition of small entity.[9]

With respect to IBIs, the Commission stated that it is appropriate to evaluate within the context of a particular rule whether some or all introducing brokers should be considered to be small entities and, if so, to analyze the economic impact on such entities at that time.[10] The proposed amendments to Rule 1.17(c)(5)(xiii) do not impose additional requirements on an IBI. Thus, on behalf of the Commission, the Chairman certifies that the proposed amendments will not have a significant economic impact on a substantial number of small entities.

B. Paperwork Reduction Act

The Paperwork Reduction Act of 1995, 44 U.S.C. 3501 *et seq.* (Supp. I 1995), imposes certain requirements on federal agencies (including the Commission) to review rules and rule amendments to evaluate the information collection burden that they impose on the public. The Commission believes that the proposed amendments to Rule 1.17(c)(5)(xiii) will impose a minimal information collection burden on the public, namely those FCMs and IBIs who wish to take advantage of the exemption will be required to maintain a record of the margins required to be on deposit with a foreign broker over the preceding six month period. However, this burden is believed to be minimal when compared to the capital savings to be generated by the exclusion of increased amounts from the capital charge.

List of Subjects in 17 CFR Part 1

Brokers, Commodity futures.

In consideration of the foregoing and pursuant to the authority contained in the Commodity Exchange Act and, in particular, Sections 4(b), 4f, 4g and 8a(5) thereof, 7 U.S.C. 6(b), 6d, 6g and 12a(5), the Commission hereby proposes to amend Chapter I of Title 17 of the Code of Federal Regulations as follows:

PART 1—GENERAL REGULATIONS UNDER THE COMMODITY EXCHANGE ACT

1. The authority citation for Part 1 continues to read as follows:

Authority: 7 U.S.C. 1a, 2, 2a, 4, 4a, 6, 6a, 6b, 6c, 6d, 6e, 6f, 6g, 6h, 6i, 6j, 6k, 6l, 6m, 6n, 6o, 6p, 7, 7a, 7b, 8, 9, 12, 12a, 12c, 13a, 13a–1, 16, 16a, 19, 21, 23, and 24.

2. Section 1.17 is proposed to be amended by revising paragraph (c)(5)(xiii) to read as follows:

[7] U.S.C. 1 *et seq.* (1994).

[8] The specific elements examined in evaluating whether a particular foreign regulatory program provides a basis for permitting substituted compliance for purposes of exemptive relief pursuant to Rule 30.10 are set forth in Appendix A to Part 30.

[9] 47 FR 18618–18621 (April 30, 1982).

[10] 48 FR 35248, 35275–78 (August 3, 1983).

§ 1.17 Minimum financial requirements for futures commission merchants and introducing brokers.

* * * * *

(c) * * *

(5) * * *

(xiii) Five percent of all unsecured receivables includable under paragraph (c)(2)(ii)(D) of this section used by the applicant or registrant in computing ''net capital'' and which are not due from:

(A) A registered futures commission merchant;

(B) A broker or dealer that is registered as such with the Securities and Exchange Commission; or

(C) A foreign broker that has been granted comparability relief pursuant to § 30.10 of this chapter, *Provided, however,* that the amount of the unsecured receivable not subject to the five percent capital charge is no greater than 150 percent of the current amount required to maintain futures and option positions in accounts with the foreign broker, or 100 percent of such greater amount required to maintain futures and option positions in the accounts at any time during the previous six-month period, and *Provided that,* in the case of customer funds, such account is treated in accordance with the special requirements of the applicable Commission order issued under § 30.10 of this chapter.

* * * * *

Issued in Washington D.C. on August 23, 2000 by the Commission.

Jean A. Webb,

Secretary of the Commission.

[FR Doc. 00–21904 Filed 8–25–00; 8:45 am]

BILLING CODE 6351–01–P

DEPARTMENT OF THE TREASURY

Bureau of Alcohol, Tobacco and Firearms

27 CFR Part 178

[Notice No. 902]

RIN 1512–AC08

Commerce in Firearms and Ammunition—Annual Inventory of Firearms (99R–502P)

AGENCY: Bureau of Alcohol, Tobacco and Firearms (ATF), Treasury.

ACTION: Notice of proposed rulemaking.

SUMMARY: The Bureau of Alcohol, Tobacco and Firearms (ATF) is proposing to amend the regulations to require Federally licensed importers, manufacturers, and dealers of firearms to take at least one physical inventory each year. The proposed regulations also specify the circumstances under which these licensees must conduct a special physical inventory. In addition, the proposed regulations clarify that when a firearm is stolen or lost in transit between licensees, for reporting purposes it is considered stolen or lost from the transferor's/sender's inventory.

DATES: Written comments must be received on or before November 27, 2000.

ADDRESSES: Send written comments to: Chief, Regulations Division; Bureau of Alcohol, Tobacco and Firearms; P.O. Box 50221; Washington, DC 20091–0221; *ATTN: Notice No. 902.* Written comments must be signed. Submit e-mail comments to: nprm@atfhq.atf.treas.gov. E-mail comments must contain your name, mailing address, and e-mail address. They must also reference this notice number and be legible when printed on not more than three pages 8½″ × 11″ in size. We will treat e-mail as originals and we will not acknowledge receipt of e-mail. See the Public Participation section of this notice for alternative means of providing written comments.

FOR FURTHER INFORMATION CONTACT: James P. Ficaretta, Regulations Division, Bureau of Alcohol, Tobacco and Firearms, 650 Massachusetts Avenue, NW., Washington, DC 20226 (202–927–8230).

SUPPLEMENTARY INFORMATION:

Background

Section 923(g)(6) of the Gun Control Act of 1968 (GCA) requires licensed manufacturers, licensed importers, licensed dealers, and licensed collectors to report any theft or loss of firearms from the licensee's inventory or collection to ATF and the appropriate local authorities within 48 hours after the theft or loss is discovered.

The regulation that implements section 923(g)(6) is contained in 27 CFR 178.39a. This section provides that each Federal firearms licensee (FFL) must report the theft or loss of a firearm from the licensee's inventory (including any firearm which has been transferred from the licensee's inventory to a personal collection and held as a personal firearm for at least 1 year), or from the collection of a licensed collector within 48 hours after the theft or loss is discovered. Licensees must report such thefts or losses by telephoning 1–800–800–3855 (nationwide toll free number) and by preparing ATF Form 3310.11, Federal Firearms Licensee Theft/Loss Report, in accordance with the instructions on the form. The original of the report must be forwarded to the office specified on the form, and Copy 1 must be retained by the licensee as part of the licensee's permanent records. The licensee must also report the theft or loss of a firearm to the appropriate local authorities.

Section 178.129(c) requires licensees to retain each copy of Form 3310.11 for a period of not less than 5 years after the date the theft or loss was reported to ATF.

Proposed Regulations

27 CFR 178.130

In 1998 and 1999, licensees filed theft/loss reports on over 5,000 incidents, involving over 27,000 lost or stolen firearms. Inventory discrepancies, recordkeeping errors, and employee theft (problems which often only become apparent when a physical inventory is conducted) accounted for almost 40 percent of the reported incidents and over 11,000 missing firearms.

Accordingly, ATF is proposing that all Federally licensed importers, manufacturers, and dealers in firearms be required to conduct at least one annual physical inventory of their firearms inventory and reconcile that inventory with the records of receipt and disposition required under part 178. In addition, ATF is proposing that these licensees be required to conduct special firearms inventories under the following conditions: at the time of commencing business (already a requirement for licensed dealers under 178.125(e)), at the time of changing the location of their business premises, at the time of discontinuing business, and at any other time the Director of Industry Operations may require in writing. These special inventory requirements are necessary to account for changes in business operations that often affect inventories.

Any theft or loss of a firearm disclosed during the annual inventory or during a special inventory must be reported within 48 hours after its discovery in accordance with the statutory requirements of 18 U.S.C. 923(g)(6). Without the inventory requirements, licensees could not effectively fulfill these reporting requirements.

The annual inventory requirement is considered to be an ordinary and customary business practice.

27 CFR 178.39a

Current regulations do not specify if firearms are considered the inventory of the sending or receiving Federal firearms licensee while in transit

between licensees on a common carrier. Therefore, current regulations do not specify whether the sending or receiving licensee is responsible for reporting the theft or loss of a firearm while it is in transit between licensees on a common carrier. The lack of clarity over which FFL is responsible for reporting the theft or loss may result in neither party reporting the theft or loss. In Fiscal Year 1999, there were 1,271 crime guns traces in which the FFL claimed that it never received the firearm shipped to it and the firearm had not been reported to ATF as lost or stolen. Thus, a significant number of firearms lost or stolen in transit are not being reported to ATF and the appropriate local authorities. In addition, common carriers are not required under Federal law to report the theft or loss of firearms shipped in commerce. These omissions prevent ATF and local law enforcement from investigating the specific theft or loss which is not reported and hinders ATF's tracing capabilities.

To eliminate this problem, ATF proposes that a firearm stolen or lost in transit between licensees be considered stolen or lost from the transferor's/sender's inventory. Accordingly, the transferor/sender of the missing firearm must report the theft or loss of the firearm within 48 hours after the theft or loss is discovered by the transferor/sender to ATF and to the appropriate local authorities.

In addition, in order to enable the transferor/sender of the firearm to have the knowledge necessary to fulfill these reporting responsibilities, the transferor/sender must have, or establish, commercial business practices which let him or her learn whether the transferee/buyer of the firearm ultimately received the firearm. The transferor/sender can fulfill this verification requirement by contacting the transferee/buyer by telephone, facsimile, or e-mail and asking whether he or she had received the firearm. The transferor/sender also could, by contract, require the transferee/buyer to always confirm receipt of firearms.

We determined it is more logical to put the reporting burden on the transferor/sender, rather than the transferee/buyer, because the transferor/sender is more likely to know the circumstances of when and how the firearm was shipped. Accordingly, it will be less burdensome for the transferor/sender to assure that he/she has the knowledge necessary to fulfill the reporting requirement than it would be for the transferee/buyer.

If a firearm is lost or stolen in transit, the notation in the acquisition and disposition book of the transferor/sender that the firearm was disposed of to a particular transferee/buyer is inaccurate. Therefore, a transferor/sender must verify that the transferee/buyer received the shipped firearm in order to fulfill his/her statutory responsibility to maintain accurate records. 18 U.S.C. 922(m), 923(g)(1)(A), and 923(g)(2).

ATF recognizes that the proposed regulation is not consistent with the Uniform Commercial Code's (UCC's) treatment of the transfer of title for risk of loss purposes. In the absence of State law governing the transfer of a firearm between the seller and the buyer, the UCC allows the seller and buyer to establish when the title of the firearm would pass from the seller to the buyer. However, ATF determined that adopting the UCC rule in the context of reporting firearms lost or stolen in transit from a common carrier would be problematic, both for FFLs to apply and for ATF to enforce. Rather than being able to follow the flat rule that the transferor/sender FFL always is responsible for reporting lost or stolen firearms, an FFL would have to look at each contract it had with another FFL to determine whether he/she had the reporting responsibility in a particular circumstance. The transferor/sending FFL may have the reporting responsibility under some contracts, and not have it under other contracts. Because of shifting responsibilities, it would be more likely that some lost or stolen firearms would slip through the cracks and go unreported.

Furthermore, it would be more difficult for ATF to ensure the reporting requirements were being fulfilled under the UCC rule. ATF would have to ask FFLs about their contracts with other FFLs. Therefore, ATF opted to propose the clear-cut rule of imposing the reporting requirements on the sending FFL, even though this requires the sending FFL to take additional steps to be informed of the theft or loss.

How This Document Complies With the Federal Administrative Requirements for Rulemaking

A. Executive Order 12866

We have determined that this proposed regulation is not a significant regulatory action as defined by Executive Order 12866. Therefore, a Regulatory Assessment is not required.

B. Regulatory Flexibility Act

The Regulatory Flexibility Act (RFA) generally requires an agency to conduct a regulatory flexibility analysis of any rule subject to notice and comment rulemaking requirements unless the agency certifies that the rule will not have a significant economic impact on a substantial number of small entities. Small entities include small businesses, small not-for-profit enterprises, and small governmental jurisdictions. We hereby certify that this proposed regulation, if adopted, will not have a significant economic impact on a substantial number of small entities because the revenue effects of this rulemaking on small businesses flow directly from the underlying statute. Likewise, any secondary or incidental effects, and any reporting, recordkeeping, or other compliance burdens flow directly from the statute. Accordingly, a regulatory flexibility analysis is not required.

C. Paperwork Reduction Act

The collections of information contained in this notice of proposed rulemaking have been submitted to the Office of Management and Budget for review in accordance with the Paperwork Reduction Act of 1995 (44 U.S.C. 3507(d)). Comments on the collections of information should be sent to the Office of Management and Budget, Attention: Desk Officer for the Bureau of Alcohol, Tobacco and Firearms, Office of Information and Regulatory Affairs, Washington, DC 20503, with copies to the Chief, Document Services Branch, Room 3110, Bureau of Alcohol, Tobacco and Firearms, at the address previously specified. Comments are specifically requested concerning:

Whether the proposed collections of information are necessary for the proper performance of the functions of the Bureau of Alcohol, Tobacco and Firearms, including whether the information will have practical utility;

The accuracy of the estimated burden associated with the proposed collections of information (see below);

How the quality, utility, and clarity of the information to be collected may be enhanced; and

How the burden of complying with the proposed collections of information may be minimized, including through the application of automated collection techniques or other forms of information technology.

The collections of information in this proposed regulation are in 27 CFR sections 178.39a and 178.130. This information is required to fulfill the statutory requirements of reporting the theft or loss of firearms to ATF. The collections of information are mandatory. The likely respondents are businesses. Since the annual inventory requirement under section 178.130 is considered to be an ordinary and

customary business practice, we are stating that there is no additional reporting and/or recordkeeping burden. The following burden hours are for the additional reporting requirements of section 178.39a.

Estimated total annual reporting and/or recordkeeping burden: 15,483 hours (estimated total hours for follow-up verification requirements of section 178.39a).

Estimated average burden hours per respondent and/or recordkeeper: .1 hours (estimated one-tenth of an hour per follow-up verification).

Estimated number of respondents and/or recordkeepers: 100,293 (total population of Federal firearms licensees excluding ammunition manufacturers).

Estimated annual frequency of responses: 929,000 (estimated number of firearm shipments per year).

An agency may not conduct or sponsor, and a person is not required to respond to, a collection of information unless it displays a valid control number assigned by the Office of Management and Budget.

Public Participation

We are requesting comments on the proposed regulations from all interested persons. In addition, we are soliciting comment on whether the inventory requirements should be applied to licensed collectors. We are also specifically requesting comments on the clarity of this proposed rule and how it may be made easier to understand.

You may submit comments by facsimile transmission to (202) 927–8602. Facsimile comments must:

- Be legible;
- Reference this notice number;
- Be 8½″ × 11″ in size;
- Contain a legible written signature; and
- Be not more than three pages long.

We will not acknowledge receipt of facsimile transmissions. We will treat facsimile transmissions as originals.

Comments received on or before the closing date will be carefully considered. Comments received after that date will be given the same consideration if it is practical to do so, but assurance of consideration cannot be given except as to comments received on or before the closing date.

We will not recognize any material in comments as confidential. Comments may be disclosed to the public. Any material which the commenter considers to be confidential or inappropriate for disclosure to the public should not be included in the comment. The name of the person submitting a comment is not exempt from disclosure.

Any interested person who desires an opportunity to comment orally at a public hearing should submit his or her request, in writing, to the Director within the 90-day comment period. The Director, however, reserves the right to determine, in light of all circumstances, whether a public hearing is necessary.

Disclosure

Copies of this notice and the written comments will be available for public inspection during normal business hours at: ATF Public Reading Room, Room 6480, 650 Massachusetts Avenue, NW., Washington, DC.

Regulation Identification Number

A regulation identification number (RIN) is assigned to each regulatory action listed in the Unified Agenda of Federal Regulations. The Regulatory Information Service Center publishes the Unified Agenda in the **Federal Register** in April and October of each year. The RIN contained in the heading of this document can be used to cross-reference this action with the Unified Agenda.

Drafting Information

The authors of this document are James P. Ficaretta, Regulations Division, and William Bowers, Firearms Trafficking Branch, Bureau of Alcohol, Tobacco and Firearms.

List of Subjects in Part 178

Administrative practice and procedure, Arms and ammunition, Authority delegations, Customs duties and inspection, Exports, Imports, Incorporation by reference, Military personnel, Penalties, Reporting requirements, Research, Seizures and forfeitures, and Transportation.

Authority and Issuance

For the reasons discussed in the preamble, ATF amends 27 CFR Part 178 as follows:

PART 178—COMMERCE IN FIREARMS AND AMMUNITION

Paragraph 1. The authority citation for 27 CFR Part 178 continues to read as follows:

Authority: 5 U.S.C. 552(a); 18 U.S.C. 847, 921–930; 44 U.S.C. 3504(h).

Par. 2. Section 178.39a is amended by adding three sentences after the first sentence to read as follows:

§ 178.39a Reporting theft or loss of firearms.

* * * When a firearm is stolen or lost in transit between licensees, it is considered stolen or lost from the transferor's/sender's inventory. Therefore, the transferor/sender of the missing firearm(s) must report the theft or loss of the firearm(s) within 48 hours after the theft or loss is discovered. The transferor/sender must have, or establish, commercial business practices which enable him/her to determine whether the transferee/buyer of the firearm(s) received the firearm(s). * * *

Par. 3. Section 178.130 is added to subpart H to read as follows:

§ 178.130 Inventory.

(a)(1) Each licensed manufacturer, licensed importer, and licensed dealer must take at least one true and accurate physical inventory each year. The inventory must include all firearms on hand required to be accounted for in the records kept under this part. Furthermore, the licensee must conduct a special physical inventory:

(i) At the time of commencing business, which is the effective date of the license issued upon original qualification under this part;

(ii) At the time of changing the location of the business premises;

(iii) At the time of discontinuing business; and

(iv) At any other time the Director of Industry Operations may in writing require.

(2) The special physical inventories required by paragraphs (a)(1)(i) through (iv) of this section count toward the annual physical inventory requirement.

(b) Every physical inventory must be reconciled with the record of receipt and disposition required under this part. Any theft or loss of a firearm disclosed during inventory must be reported within 48 hours after its discovery in accordance with the requirements of § 178.39a.

(c) Every licensed manufacturer, licensed importer, and licensed dealer must maintain a record of any inventory required by this section for a period of not less than 5 years after the inventory was conducted. The record must include the following firearms information—

(1) Name of manufacturer and/or importer;

(2) Model;

(3) Serial number;

(4) Type; and

(5) Caliber or gauge.

Dated: June 20, 2000.

Bradley A. Buckles,

Director.

Approved: August 3, 2000.

John P. Simpson,

Deputy Assistant Secretary (Regulatory, Tariff and Trade Enforcement).

[FR Doc. 00–21903 Filed 8–25–00; 8:45 am]

BILLING CODE 4810–31–P

DEPARTMENT OF TRANSPORTATION

Coast Guard

33 CFR Part 117

[CGD08–00–021]

RIN 2115–AE47

Drawbridge Operating Regulation; Gulf Intracoastal Waterway, Algiers Alternate Route, Louisiana

AGENCY: Coast Guard, DOT.

ACTION: Notice of proposed rulemaking.

SUMMARY: The Coast Guard proposes to change the regulation governing the operation of the State Route 23 vertical lift span drawbridge across the Gulf Intracoastal Waterway (Algiers Alternate Route), mile 3.8, at Belle Chasse, Louisiana. The change would allow the bridge to remain closed to navigation from 4 p.m. until 7 p.m. on Saturday and Sunday of the last weekend in October. This change would facilitate the movement of vehicular traffic from the New Orleans Open House Air Show held annually at the Naval Air Station, Joint Reserve Base at Belle Chasse, Louisiana.

DATES: Comments and related material must reach the Coast Guard on or before September 27, 2000.

ADDRESSES: You may mail comments and related material to Commander (ob), Eighth Coast Guard District, 501 Magazine St., Room 1313, New Orleans, LA 70130–3396. The Bridge Administration Branch of the Eighth Coast Guard District maintains the public docket for this rulemaking. Comments and materials received from the public, as well as documents indicated in this preamble as being available in the docket, will be available for inspection or copying at the office of the Eighth Coast Guard District, Bridge Administration Branch, Hale Boggs Federal Building, Room 1313, 501 Magazine Street, New Orleans, Louisiana 70130–3396 between 7 a.m. and 3 p.m., Monday through Friday, except Federal holidays.

FOR FURTHER INFORMATION CONTACT: Mr. David Frank, Bridge Administration Branch, Commander (ob), Eighth Coast Guard District, 501 Magazine Street, New Orleans, Louisiana, 70130–3396, telephone number 504–589–2965.

SUPPLEMENTARY INFORMATION:

Regulatory Information

We encourage you to participate in this rulemaking by submitting comments and related material. If you do so, please include your name and address, identify the docket number for this rulemaking (CGD8–00–021), indicate the specific section of this document to which each comment applies, and give the reason for each comment. Please submit all comments and related material in an unbound format, no larger than 8 1/2 by 11 inches, suitable for copying. If you would like to know they reached us, please enclose a stamped, self-addressed postcard or envelope. We consider all comments and material received during the comment period. We may change this proposed rule in view of them.

Public Meeting

We do not plan to hold a public meeting. But you may submit a request for a meeting by writing to the Eighth Coast Guard District Bridge Administration Branch at the address under **ADDRESSES** explaining why one would be beneficial. If we determine that one would aid this rulemaking, we will hold one at a time and place announced by a later notice in the **Federal Register**.

Background and Purpose

The State Route 23 vertical lift span drawbridge across the Gulf Intracoastal Waterway (Algiers Alternate Route), mile 3.8, at Belle Chasse, Louisiana has a vertical clearance of 40 feet above mean high water in the closed-to-navigation position and 100 feet above mean high water in the open-to-navigation position. Navigation on the waterway consists primarily of tugs with tows, commercial fishing vessels, and occasional recreational craft.

The Department of the Navy requested a rule changing the operation of the State Route 23 vertical lift span drawbridge. The proposed change is needed to accommodate the additional volume of vehicular traffic that the New Orleans Open House Air Show generates each year. Between 150,000 and 200,000 members of the public are expected to attend the New Orleans Open House Air Show on each day. The proposed change would allow for the expeditious dispersal of the heavy volume of vehicular traffic expected to depart the Naval Air Station, Joint Reserve Base following the event. This event has been held annually on the last weekend in October. This proposed change would eliminate the necessity of having to do a rulemaking each year for this annually scheduled event.

Discussion of Proposed Rule

This proposed rule would allow the bridge to remain closed to navigation from 4 p.m. until 7 p.m. on Saturday and Sunday of the last weekend in October. The closure of the bridge would affect marine traffic for a three-hour period on each day, but alternate routes are available. Vessels with less than 40 feet of vertical clearance requirements may continue to transit the waterway. This proposed annual closure allows for a temporary increase in vehicular traffic to transit over the bridge on this weekend while not significantly inconveniencing the mariners transiting the waterway. This drawbridge closure has occurred annually on the last weekend in October for many years.

Regulatory Evaluation

This proposed rule is not a ''significant regulatory action'' under section 3(f) of Executive Order 12866 and does not require an assessment of potential costs and benefits under section 6(a)(3) of that Order. The Office of Management and Budget has not reviewed it under that Order. It is not significant under the regulatory policies and procedures of the Department of Transportation (DOT)(44 FR 11040; February 26, 1979).

The Coast Guard expects the economic impact of this proposed rule to be so minimal that a full Regulatory Evaluation under paragraph 10(e) of the regulatory policies and procedures of DOT is unnecessary.

This is because the number of vessels impaired during the closed-to-navigation periods is minimal. All commercial vessels still have ample opportunity to transit this waterway before and after the each three-hour closure on the last weekend in October. Additionally, a practical alternate route of approximately seven additional miles is available via the Harvey Canal and the Mississippi River.

Small Entities

Under the Regulatory Flexibility Act (5 U.S.C. 601 *et seq.*), the Coast Guard considers whether this proposed rule would have a significant economic impact on a substantial number of small entities. The term ''small entities'' comprises small businesses, not-for-profit organizations that are independently owned and operated and are not dominant in their fields, and governmental jurisdictions with populations of less than 50,000.

The Coast Guard certifies under 5 U.S.C. 605(b) that this proposed rule would not have a significant economic impact on a substantial number of small entities.

This proposed rule would affect the following entities, some of which may be small entities: the owners or operators of vessels intending to transit

through the bridge across the Gulf Intracoastal Waterway (Algiers Alternate Route) from 4 p.m. until 7 p.m. on the last weekend in October.

If you think that your business, organization, or governmental jurisdiction qualifies as a small entity and that this proposed rule would have a significant economic impact on it, please submit a comment (see **ADDRESSES**) explaining why you think it qualifies and how and to what degree this proposed rule would economically affect it.

Assistance for Small Entities

Under the 213(a) of the Small Business Regulatory Enforcement Fairness Act of 1996 (Pub. L. 104–121, we want to assist small entities in understanding the proposed rule so that they can better evaluate its effects on them and participate in the rulemaking process. If the rule would affect your small business, organization, or governmental jurisdiction and you have questions concerning its provisions or options for compliance, please contact the Bridge Administration Branch, Eighth Coast Guard District at the address above.

Collection of Information

This proposed rule would call for no new collection of information under the Paperwork Reduction Act of 1995 (44 U.S.C. 3501–3520.).

Federalism

We have analyzed this proposed rule under Executive Order 13132 and have determined that this proposed rule would not have implications for federalism under that Order.

Unfunded Mandates Reform Act

The Unfunded Mandates Reform Act of 1995 (2 U.S.C. 1531–1538) governs the issuance of Federal regulations that require unfunded mandates. An unfunded mandate is a regulation that requires a State, local, or tribal government or the private sector to incur direct costs without the Federal Government's having first provided the funds to pay those costs. This proposed rule would not impose an unfunded mandate.

Taking of Private Property

This proposed rule would not effect a taking of private property or otherwise have taking implications under Executive Order 12630, Governmental Actions and Interference with Constitutionally Protected Property Rights.

Civil Justice Reform

This proposed rule meets applicable standards in sections 3(a) and 3(b)(2) of Executive Order 12988, Civil Justice Reform, to minimize litigation, eliminate ambiguity, and reduce burden.

Protection of Children

We have analyzed this proposed rule under Executive Order 13045, Protection of Children from Environmental Health Risks and Safety Risks. This proposed rule is not an economically significant rule and does not concern an environmental risk to health or risk to safety that may disproportionately affect children.

Environment

We considered the environmental impact of this proposed rule and concluded that, under figure 2–1, paragraph (32)(e), of Commandant Instruction M16475.lC, this proposed rule is categorically excluded from further environmental documentation. Bridge Administration Program actions that can be categorically excluded include promulgation of operating regulations or procedures for drawbridges. A ''Categorical Exclusion Determination'' is available in the docket where indicated under **ADDRESSES.**

List of Subjects in 33 CFR Part 117

Bridges.

Regulations

For the reasons set out in the preamble, the Coast Guard proposes to amend Part 117 of Title 33, Code of Federal Regulations, as follows:

PART 117—DRAWBRIDGE OPERATION REGULATIONS

1. The authority citation for Part 117 continues to read as follows:

Authority: 33 U.S.C. 499; 49 CFR 1.46; 33 CFR 1.05–1(g); section 117.255 also issued under the authority of Pub. L. 102–587, 105 Stat. 5039.

2. Section 117.451(b) is revised to read as follows:

§ 117.451 Gulf Intracoastal Waterway.

* * * * *

(b) The draw of the SR 23 bridge, Algiers Alternate Route, mile 3.8 at Belle Chasse, operates as follows:

(1) The draw shall open on signal; except that, from 6 a.m. until 8:30 a.m. and from 3:30 p.m. until 5:30 p.m. Monday through Friday, except Federal holidays, the draw need not be opened for the passage of vessels.

(2) On Saturday and Sunday of the last weekend in October, the draw need not open for the passage of vessels from 4 p.m. until 7 p.m.

* * * * *

Dated: August 21, 2000.

K.J. Eldridge,

Captain, U.S. Coast Guard Acting Commander, 8th Coast Guard Dist.

[FR Doc. 00–21880 Filed 8–25–00; 8:45 am]

BILLING CODE 4910–15–U

ENVIRONMENTAL PROTECTION AGENCY

40 CFR Part 60

[AD–FRL–6859–5]

RIN 2060–AG31

Standards of Performance for New Stationary Sources and Emission Guidelines for Existing Sources for Commercial and Industrial Solid Waste Incineration Units

AGENCY: Environmental Protection Agency (EPA).

ACTION: Notice of data availability.

SUMMARY: This notice announces the availability of additional data which supplement the database of emissions test reports used in developing the final regulations for commercial and industrial solid waste incineration (CISWI) units. We plan to issue the final regulations by November 15, 2000. However, as we move toward finalization of that rulemaking, we will continue to evaluate the completeness of the rulemaking docket and may periodically add additional material relevant to the development of the final regulations (including, for example, additional data regarding the characteristics of the incineration units considered in that rulemaking and/or the emissions of pollutants from such units).

ADDRESSES: Docket No. A–94–63 contains the supporting information for development of performance standards and emission guidelines for CISWI units and is available for public inspection and copying between 8 a.m. and 5:30 p.m., Monday through Friday, at the Air and Radiation Docket and Information Center, U.S. Environmental Protection Agency, 401 M Street, SW., Washington, DC 20460, telephone (202) 260–7548, fax (202) 260–4000. The docket is available at the above address in Room M–1500, Waterside Mall (ground floor, central mall). A reasonable fee may be charged for copying.

FOR FURTHER INFORMATION CONTACT: Mr. Fred Porter, Combustion Group, Emission Standards Division (MD–13),

U.S. EPA, Research Triangle Park, North Carolina 27711, (919) 541–5251, e-mail porter.fred@epa.gov.

SUPPLEMENTARY INFORMATION: On November 30, 1999, we published proposed regulations to limit air pollution emissions from CISWI units (64 FR 67092). In the 1999 proposal, we asked for comment on the proposed emissions limitations for certain pollutants because of the limited amount of data available for some pollutants in the source category.

Commenters stated that because the emissions test data upon which several of the emissions limitations were based at proposal were extremely limited, the proposed limitations were not representative of actual CISWI unit performance. Several of the commenters suggested that we consider expanding the CISWI emissions database by adding emissions data from rulemakings which establish standards for sources that use similar emissions control technologies under comparable operating conditions. We have considered the comments and believe that it is appropriate under the circumstances to consider certain emissions test data from sources outside the CISWI category in order to help us better evaluate the actual performance of CISWI units using similar control technology. Specifically, because for three pollutants—dioxins/furans, mercury, and hydrogen chloride—only one or two CISWI emissions tests are available, we have decided not to rely only on those emissions tests to determine the emissions limitations for those three pollutants.

Instead, we intend to supplement the limited data for dioxins/furans, mercury, and hydrogen chloride emissions from CISWI units controlled by wet scrubbing systems with emissions data from similarly controlled units outside of the CISWI category. That approach will allow us to better characterize the actual dioxins/furans, mercury, and hydrogen chloride emissions limitations achieved by units in the CISWI category by providing additional information regarding the performance of wet scrubbers under conditions similar to those experienced by CISWI units.

Hazardous waste incinerator (HWI) units without waste heat boilers that are controlled with wet scrubbing systems serve as a valuable source of supplementary data for emissions of dioxins/furans (waste heat boilers on HWI can result in increased dioxins/furans emissions that are not representative of dioxins/furans emissions from CISWI units). Those types of HWI units are generally similar to CISWI units that are controlled by wet scrubbing systems. Thus, it is reasonable to conclude that the emissions performance of HWI units without waste heat boilers controlled with wet scrubbing systems is comparable to that of CISWI units controlled with wet scrubbing systems. Accordingly, we intend to combine the dioxins/furans emissions data from HWI units that do not use waste heat recovery boilers and that are controlled with wet scrubbing systems with the dioxins/furans emission data from CISWI units controlled with wet scrubbing systems to estimate the dioxins/furans emissions limitations achieved by units in the CISWI category.

Unfortunately, with respect to the other two pollutants (mercury and hydrogen chloride) for which CISWI test data are extremely limited, it is inappropriate to use emissions data from HWI units to supplement the CISWI unit data. The mercury and hydrogen chloride emissions data available from HWI units are based on the use of a different emission control technology than wet scrubbing systems. That fact prevents us from combining mercury and hydrogen chloride emissions data from HWI units with that from CISWI units. Since appropriate HWI data were not available, we considered other possible sources of data to augment mercury and hydrogen chloride emissions data from CISWI units controlled by wet scrubbing systems, and concluded that hospital/medical/infectious waste incinerator (HMIWI) units controlled with wet scrubbing systems could serve as a valuable source of supplementary data for mercury and hydrogen chloride.

The HMIWI units are also generally similar to CISWI units that are controlled by wet scrubbing systems. Thus, it is reasonable to conclude that the mercury and hydrogen chloride emissions performance achieved by HMIWI units controlled with wet scrubbing systems is comparable to that of CISWI units controlled with wet scrubbing systems. Accordingly, we intend to combine the mercury and hydrogen chloride emissions data from HMIWI units controlled with wet scrubbing systems with the mercury and hydrogen chloride emissions data from CISWI units controlled with wet scrubbing systems to estimate the emissions limitations achieved by units in the CISWI category for those pollutants.

That process for augmenting the CISWI data with appropriate HWI or HMIWI data will result in dioxins/furans, mercury, and hydrogen chloride emissions limitations which more accurately represent the levels of such emissions limitations actually achieved by CISWI units employing wet scrubbing systems. That approach to developing the emissions limitations will provide a reasonable proxy for the actual performance of the best-performing CISWI units and is the most appropriate method, under the circumstances, for EPA to identify the emissions limitations that are achieved by such units.

While we believe that emissions data for dioxins/furans, mercury, and hydrogen chloride from the HWI and HMIWI categories are useful for augmenting the CISWI data where insufficient CISWI emission data are available, we do not believe that HWI, HMIWI, and CISWI units should generally be characterized as similar units for the purpose of determining emissions limitations for all pollutants for CISWI units.

The emissions data we intend to use from HWI and HMIWI units to develop the final emissions limitations for CISWI units are presented in Tables 1 and 2 of this document. Table 1 presents the dioxins/furans emissions data from HWI units without waste heat recovery boilers and controlled with wet scrubbing systems. The data were collected during the development of regulations for HWI units. The units of measure are nanograms toxic equivalent quantity per dry standard cubic meter (ng TEQ/dscm) based on 1989 international toxic equivalency factors. Table 2 presents the mercury and hydrogen chloride emissions data from HMIWI units with wet scrubbing systems. The data were collected during the development of regulations for HMIWI units. The units of measure for mercury are milligrams per dry standard cubic meter (mg/dscm), and the units of measure for hydrogen chloride are parts per million (ppm).

TABLE 1.—WET SCRUBBER DIOXINS/FURANS EMISSIONS DATA FROM HAZARDOUS WASTE INCINERATOR UNITS WITHOUT WASTE HEAT BOILERS

Facility ID	Dioxins/Furans Emissions (ng TEQ/dscm)
Rollins Environmental	0.081
Ross	0.057
Army Atoll	0.050
DOD Johnson Atoll	0.071
DOD Tooele	0.004
DOD Tooele	0.014
DOD Tooele	0.002
Occidential	0.066
Occidential	0.035
Occidential	0.027
Dow Chemical	0.172
Dow Midland	0.009
DOE	0.015
Waste Tech	0.244
Waste Tech	0.130
Waste Tech	0.033
Waste Tech	0.052
Army Atoll	0.070
American Cyanamid	0.006
American Cyanamid	0.006
Ciba	0.015
DOD Tooele	0.002
DOD Tooele	0.036
DOD Tooele	0.007
Chevron	0.016
Chevron	0.021
Chem Waste	0.099
Chem Waste	0.410
Chem Waste	0.210
Chem Waste	0.007
Chem Waste	0.010
Chem Waste	0.006
Chem Waste	0.025
Rollins Deer Park	0.004
Zeneca	0.146
American Cyanamid	0.010
Eastman Kodak	0.240
DOD Tooele	0.001

TABLE 2.—WET SCRUBBER HYDROGEN CHLORIDE AND MERCURY EMISSIONS DATA FROM HOSPITAL/MEDICAL/INFECTIOUS WASTE INCINERATOR UNITS

Facility ID	Hydrogen Chloride Emissions (ppm)	Mercury Emissions (mg/dscm)
Bayfront	1.08	No Data
Bethesda	No Data	0.017
Boca 93	0.05	0.040
Boca 94	1.48	No Data
Hershey	9.33	0.106
JFK	1.21	0.004
Mass General	No Data	0.048
Memorial City	3.61	0.301
Mercy	0.05	No Data
Norwalk	3.04	No Data
Rahway	0.80	0.062
Stony Brook	1.75	0.473
St Vincent	3.60	No Data
U Texas	1.49	No Data

Dated: August 22, 2000.

Robert Perciasepe,

Assistant Administrator for Air and Radiation.

[FR Doc. 00–21917 Filed 8–25–00; 8:45 am]

BILLING CODE 6560–50–P

ENVIRONMENTAL PROTECTION AGENCY

40 CFR Part 194

[FRL–6859–4]

RIN 2060–AG85

Waste Characterization Program Documents Applicable to Transuranic Radioactive Waste From the Rocky Flats Environmental Technology Site for Disposal at the Waste Isolation Pilot Plant

AGENCY: Environmental Protection Agency.

ACTION: Notice of availability; opening of public comment period.

SUMMARY: The Environmental Protection Agency (EPA) is announcing the availability of, and soliciting public comments for 30 days on, a Department of Energy (DOE) document applicable to characterization of transuranic (TRU) radioactive waste at the Rocky Flats Environmental Technology Site (RFETS) proposed for disposal at the Waste Isolation Pilot Plant (WIPP). The document is entitled, ''Operating the Neutron Multiplicity Counters and TRIFID Gamma-Ray Isotopics Systems, Rev. 1, 12/17/99.'' It is available for review in the public dockets listed in **ADDRESSES.** We will conduct an inspection of waste characterization systems and processes at RFETS to verify that the proposed nondestructive assay process at RFETS can characterize transuranic waste in accordance with EPA's WIPP compliance criteria. EPA will perform this inspection the week of September 18, 2000.

DATES: EPA is requesting public comment on the document. Comments must be received by EPA's official Air Docket on or before September 27, 2000.

ADDRESSES: Comments should be submitted to: Docket No. A–98–49, Air Docket, Room M–1500 (LE–131), U.S. Environmental Protection Agency, 401 M Street, S.W., Washington, DC 20460. The DOE documents are available for review in the official EPA Air Docket in Washington, DC, Docket No. A–98–49, Category II–A2, and at the following three EPA WIPP informational docket locations in New Mexico: in Carlsbad at the Municipal Library, Hours: Monday–Thursday, 10 am–9 pm, Friday–Saturday, 10 am–6 pm, and Sunday 1 pm–5 pm; in Albuquerque at the Government Publications Department, Zimmerman Library, University of New Mexico, Hours: vary by semester; and in Santa Fe at the New Mexico State Library, Hours: Monday–Friday, 9am–5pm.

As provided in EPA's regulations at 40 CFR part 2, and in accordance with normal EPA docket procedures, if copies of any docket materials are requested, a reasonable fee may be charged for photocopying.

FOR FURTHER INFORMATION CONTACT: Scott Monroe, Office of Radiation and Indoor Air, (202) 564–9310, or call EPA's toll-free WIPP Information Line, 1–800–331–WIPP.

SUPPLEMENTARY INFORMATION:

Background

DOE has opened the WIPP near Carlsbad, New Mexico, as a deep geologic repository for disposal of TRU radioactive waste. As defined by the WIPP Land Withdrawal Act (LWA) of 1992 (Public Law 102–579), as amended (Public Law 104–201), TRU waste consists of materials containing elements having atomic numbers greater than 92 (with half-lives greater than twenty years), in concentrations greater than 100 nanocuries of alpha-emitting TRU isotopes per gram of waste. Much of the existing TRU waste consists of items contaminated during the production of nuclear weapons, such as rags, equipment, tools, and sludges.

On May 13, 1998, we announced our final compliance certification decision to the Secretary of Energy (published May 18, 1998, 63 FR 27354). This decision stated that the WIPP will comply with EPA's radioactive waste disposal regulations at 40 CFR part 191, subparts B and C.

The final WIPP certification decision includes conditions that: (1) prohibit shipment of TRU waste for disposal at WIPP from any site other than the Los Alamos National Laboratory (LANL) until the EPA determines that the site has established and executed a quality assurance program, in accordance with §§ 194.22(a)(2)(i), 194.24(c)(3), and 194.24(c)(5) for waste characterization activities and assumptions (Condition 2 of appendix A to 40 CFR part 194); and (2) prohibit shipment of TRU waste for disposal at WIPP from any site other than LANL until the EPA has approved the procedures developed to comply with the waste characterization requirements of § 194.22(c)(4) (Condition 3 of appendix A to 40 CFR part 194). Our approval process for waste generator sites is described in § 194.8. As part of our decision-making process, the DOE is required to submit to us documents describing the quality assurance and waste characterization programs at each DOE waste generator site seeking approval for shipment of TRU radioactive waste to WIPP. In accordance with § 194.8, we place these documents in the official Air Docket in Washington, D.C., and in supplementary dockets in the State of New Mexico, for public review and comment.

EPA approved the required quality assurance program at RFETS in March 1999. EPA also approved certain waste characterization processes at RFETS in March 1999, June 1999, and January 2000. DOE is proposing to use additional nondestructive assay processes that EPA did not previously inspect at RFETS. EPA will conduct a inspection of RFETS to verify that the proposed processes are effective as part of the system of controls for waste characterization in accordance with 40 CFR 194.24.

We have placed the governing procedure for the Canberra Neutron Multiplicity Counters and Transuranic Isotopic Fraction Identification Device (TRIFID) Gamma-Ray Isotopics Systems in the public docket described in **ADDRESSES.** The document is entitled, ''Operating the Neutron Multiplicity Counters and TRIFID Gamma-Ray Isopotics Systems, Rev. 1, 12/17/99.'' We have also placed the most recent revision (No. 4) of the RFETS ''Transuranic Waste Management Manual'' in the docket. In accordance with 40 CFR 194.8, as amended by the final certification decision, we are providing the public 30 days to comment on these documents.

If we determine as a result of the inspection that the proposed processes at RFETS adequately control the characterization of transuranic waste, we will notify DOE by letter and place the letter in the official Air Docket in Washington, DC, as well as in the three duplicate dockets in New Mexico. A letter of approval will allow the DOE to ship from RFETS the TRU waste that may be characterized using the approved processes. We will not make a determination of compliance prior to the inspection or before the 30-day comment period has closed.

Information on the certification decision is filed in the official EPA Air Docket, Docket No. A–93–02 and is available for review in Washington, DC, and at three EPA WIPP informational docket locations in New Mexico. The dockets in New Mexico contain only major items from the official Air Docket in Washington, DC, plus those documents added to the official Air

Docket since the October 1992 enactment of the WIPP LWA.

Dated: August 22, 2000.

Robert Perciasepe,

Assistant Administrator for Air and Radiation.

[FR Doc. 00–21889 Filed 8–23–00; 4:45 pm]

BILLING CODE 6560–50–P

ENVIRONMENTAL PROTECTION AGENCY

40 CFR Part 300

[FRL–6854–2]

National Oil and Hazardous Substances Pollution Contingency Plan; National Priorities List

AGENCY: Environmental Protection Agency (EPA).

ACTION: Proposed deletion of the General Tire Landfill Site from the National Priorities List (NPL).

SUMMARY: The EPA proposes to delete the General Tire Landfill Site (site) from the NPL and requests public comment on this action. The NPL constitutes appendix B to Part 300 of the National and Hazardous Substances Pollution Contingency Plan (NCP), which EPA promulgated pursuant to section 105 of the Comprehensive Environmental Response, Compensation, and Liability Act of 1980 (CERCLA) as amended. The EPA has determined that the site poses no significant threat to public health or the environment, as defined by CERCLA, and therefore, no further remedial measures pursuant to CERCLA is warranted.

We are publishing this rule without prior proposal because the EPA views this as a noncontroversial revision and anticipates no dissenting comments. A detailed rationale for this approval is set forth in the direct final rule. If no dissenting comments are received, no further activity is contemplated. If EPA receives dissenting comments, the direct final action will be withdrawn and all public comments received will be addressed in a subsequent final rule based on this proposed rule. The EPA will not institute a second comment period. Any parties interested in commenting should do so at this time.

DATES: Comments concerning this action must be received by September 28, 2000.

ADDRESSES: Comments may be mailed to Nestor Young, Remedial Project Manager, U.S. Environmental Protection Agency, Region 4, 61 Forsyth Street, SW., Atlanta, GA 30303. Comprehensive information on this site is available through the public docket which is available for viewing at the site information repositories at the following locations: U.S. EPA Region 4, 61 Forsyth Street, SW., Atlanta, GA 30303; and the Graves County Library, 601 North 17 Street, Mayfield, Kentucky 42066, (270) 247–2911.

FOR FURTHER INFORMATION CONTACT: Nestor Young, Remedial Project Manager, U.S. Environmental Protection Agency, Region 4, 61 Forsyth Street, SW., Atlanta, GA 30303, (404) 562–8812, Fax (404) 562–8788, *young.nestor@epa.gov.*

SUPPLEMENTARY INFORMATION: For additional information, see the Direct Final Action which is located in the Rules section of this **Federal Register**.

Authority: 33 U.S.C. 1321(c)(2); 42 U.S.C. 9601–9657; E.O. 12777, 56 FR 54757, 3 CFR, 1991 Comp.; p.351; E.O. 12580, 52 FR 2923, 3 CFR, 1987 Comp.; p. 193.

Dated: August 9, 2000.

A. Stanley Meiburg,

Acting Regional Administrator, EPA Region 4.

[FR Doc. 00–21374 Filed 8–25–00; 8:45 am]

BILLING CODE 6560–50–U

Notices

Federal Register
Vol. 65, No. 167
Monday, August 28, 2000

This section of the FEDERAL REGISTER contains documents other than rules or proposed rules that are applicable to the public. Notices of hearings and investigations, committee meetings, agency decisions and rulings, delegations of authority, filing of petitions and applications and agency statements of organization and functions are examples of documents appearing in this section.

DEPARTMENT OF AGRICULTURE

Agricultural Marketing Service

[Docket No. TB–00–21]

Burley Tobacco Advisory Committee; Meeting

In accordance with the Federal Advisory Committee Act (5 U.S.C. App.) announcement is made of the following committee meeting:

Name: Burley Tobacco Advisory Committee.

Date: September 14, 2000.

Time: 9 a.m.

Place: Campbell House Inn, North Colonial Hall, 1375 Harrodsburg Road, Lexington, Kentucky 40504.

Purpose: To elect officers, establish submarketing areas, discuss selling schedules, and review the operational policies and procedures for the 2000–2001 burley tobacco marketing season. The meeting is open to the public. Persons, other than members, who wish to address the Committee at the meeting should contact John P. Duncan III, Deputy Administrator, Tobacco Programs, AMS, U.S. Department of Agriculture, Room 502 Annex Building, P.O. Box 96456, Washington, DC 20090–6456, (202) 205–0567, prior to the meeting. Written statements may be submitted to the Committee before, at, or after the meeting. If you need any accommodations to participate in the meeting, please contact the Tobacco Programs at (202) 205–0567 by September 5, 2000, and inform us of your needs.

Dated: August 22, 2000.

William O. Coats,

Associate Deputy Administrator, Tobacco Programs.

[FR Doc. 00–21900 Filed 8–25–00; 8:45 am]

BILLING CODE 3410–02–P

DEPARTMENT OF COMMERCE

Submission for OMB Review; Comment Request.

DOC has submitted to the Office of Management and Budget (OMB) for clearance the following proposal for collection of information under the provisions of the Paperwork Reduction Act of 1995 (44 U.S.C. Chapter 35).

Bureau: International Trade Administration (ITA).

Title: Information for Certification Under FAQ 6 of the Safe Harbor Privacy Principles.

Agency Form Number: None.

OMB Number: None.

Type of Request: Emergency submission.

Burden Hours: 550.

Number of Respondents: 1,500.

Average Hours Per Response: 20–40 minutes.

Needs and Uses: In response to the European Commission Directive on Data Protection that restricts transfers of personal information from Europe to countries whose privacy practices are not deemed ''adequate,'' the U.S. Department of Commerce has developed a ''safe harbor'' framework that will allow U.S. organizations to satisfy the European Directive's requirements and ensure that personal data flows to the United States are not interrupted. In this process, the Department of Commerce repeatedly consulted with U.S. organizations affected by the European directive and interested non-government organizations. On July 27, 2000, the European Commission issued its decision in accordance with Article 25.6 of the Directive that the Safe Harbor Privacy Principles provide adequate privacy protection. The safe harbor framework bridges the differences between the European Union (EU) and U.S. approaches to privacy protection. Once the safe harbor was deemed ''adequate'' by the European Commission on July 27, 2000, the Department of Commerce began working on the requirements that are necessary to put this accord into effect. The European Member States have 90 days to implement any decision made by the Commission. Therefore the safe harbor will become operational at the end of October, and the U.S. Government needs to be prepared. There are two sets of requirements that must be completed before the 90 days have passed: creation of a list for U.S. organizations to sign up to the safe harbor and guidance on the mechanics of signing up to this list. If the safe harbor is to be operational by the start date (end of October) companies must be able to sign up before then. This list will be used by EU organizations to determine whether further information and contracts will be needed for a U.S. organization to receive personally identifiable information. This list is necessary to make the safe harbor accord operational, and was a key demand of the Europeans in agreeing that the Principles were providing ''adequate'' privacy protection.

Affected Public: Business or other for-profit organizations.

Frequency: Annually.

Respondent?s Obligation: Voluntary.

OMB Desk Officer: David Rostker, (202) 395–3897.

Copies of the above information collection proposal can be obtained by calling or writing Madeleine Clayton, Departmental Forms Clearance Officer, (202) 482–3129, Department of Commerce, Room 6086, 14th and Constitution, NW, Washington, DC 20230 (or via the Internet MClayton@doc.gov).

Written comments and recommendations for the proposed information collection should be sent to David Rostker, OMB Desk Officer, Room 10202, New Executive Office Building, Washington, DC 20503.

Dated: August 23, 2000.

Madeleine Clayton,

Departmental Forms Clearance Officer, Office of the Chief Information Officer.

[FR Doc. 00–21891 Filed 8–25–00; 8:45 am]

BILLING CODE 3510–DR–P

DEPARTMENT OF COMMERCE

Submission for OMB Review; Comment Request

The Department of Commerce (DOC) has submitted to the Office of Management and Budget (OMB) for clearance the following proposal for collection of information under provisions of the Paperwork Reduction Act (44 U.S.C. Chapter 35).

Agency: National Telecommunications and Information Administration (NTIA).

Title: Public Telecommunications Facilities Program (PTFP) Application Form.

Agency Form Number: None.

OMB Approval Number: 0660–0003.

Type of Request: Revision of currently approved form.

Burden Hours: 40,250.

Average Hour Per Response: 89.

Number of Respondents: 450.

Needs and Uses: The Public Broadcasting Act authorizes grants to be awarded for the planning and construction of public telecommunications facilities. Members of the public telecommunications community must complete a standardized form to provide information of evaluation by PTFP through a competitive review process.

Affected Public: State and local governments and non-profit institutions.

Frequency: Annually.

Respondent's Obligation: Required to obtain or retain benefits.

OMB Desk Officer: David Rostker, (202) 395–3897.

Copies of the above information collection proposal can be obtained by calling or writing Madeleine Clayton, DOC Forms Clearance Officer, (202) 482–3129, U.S. Department of Commerce, Room 6086, 14th and Constitution Avenue, NW, Washington, DC 20230 (or via the Internet at MClayton@doc.gov).

Written comments and recommendations for the proposed information collection should be sent within 30 days of publication of this notice to David Rostker, Desk Officer, Room 10202, New Executive Office Building, Washington, DC 20503.

Dated: August 23, 2000.

Madeleine Clayton,

Departmental Forms Clearance Officer, Office of the Chief Information Officer.

[FR Doc. 00–21892 Filed 8–25–00; 8:45 am]

BILLING CODE 3510–DS–P

DEPARTMENT OF COMMERCE

Submission for OMB Review; Comment Request

DOC has submitted to the Office of Management and Budget (OMB) for clearance the following proposal for collection of information under the provisions of the Paperwork Reduction Act of 1995, Pub. L. 104–13.

Bureau: International Trade Administration, Import Administration.

Title: Format for Petition Requesting Relief Under U.S. Countervailing Duty Law.

Agency Form Number: ITA–366P.

OMB Number: 0625–0148.

Type of Request: Regular submission.

Burden: 200 hours.

Number of Respondents: 5.

Avg. Hours Per Response: 40.

Needs and Uses: The International Trade Administration, Import Administration, AD/CVD Enforcement, implements the U.S. antidumping and countervailing duty laws. Import Administration investigates allegations of unfair trade practices by foreign governments and producers and, in conjunction with the U.S. International Trade Commission, can impose duties on the product in question to offset the unfair practices. Form ITA 366–P—Format for Petition Requesting Relief Under the U.S. Countervailing Duty Law is designed for U.S. companies or industries that are unfamiliar with the countervailing duty law and the petition process. The companies use the form to file for tax relief when they believe a foreign competitor is being subsidized unfairly. Since a variety of detailed information is required under the law before initiation of a countervailing duty investigation, the Form is designed to extract such information in the least burdensome manner possible. Several revisions were made to the Form in an attempt to make it more ''user friendly'' and to ensure that the format complies with the Uruguay Round Agreement Subsidies Act.

Affected Public: Businesses or other for-profit.

Frequency: On occasion.

Respondent's Obligation: Required to obtain or retain a benefit.

OMB Desk Officer: David Rostker, (202) 395–7340.

Copies of the above information collection proposal can be obtained by calling or writing Madeleine Clayton, Departmental Forms Clearance Officer, (202) 482–3129, Department of Commerce, Room 6086, 14th and Constitution Avenue, NW, Washington, DC 20230. Email MClayton@doc.gov.

Written comments and recommendations for the proposed information collection should be sent to David Rostker, OMB Desk Officer, Room 10202, New Executive Office building, Washington, DC 20503 within 30 days of the publication of this notice in the **Federal Register**.

Dated: August 22, 2000.

Madeleine Clayton,

Management Analyst, Office of the Chief Information Officer.

[FR Doc. 00–21893 Filed 8–25–00; 8:45 am]

BILLING CODE 3510–DS–P

DEPARTMENT OF COMMERCE

Bureau of Export Administration

Regulations and Procedures Technical Advisory Committee; Notice of Partially Closed Meeting

The Regulations and Procedures Technical Advisory Committee (RPTAC) will meet September 12, 2000, 9:00 a.m., Room 3884, in the Herbert C. Hoover Building, 14th Street between Constitution and Pennsylvania Avenues, N.W., Washington, D.C. The Committee advises the Office of the Assistant Secretary for Export Administration on implementation of the Export Administration Regulations (EAR) and provides for continuing review to update the EAR as needed.

Agenda

Public Session

1. Opening remarks by the Chairperson.
2. Presentation of papers or comments by the public.
3. Update on pending regulatory revisions.
4. Update on BXA policies under review.
5. Discussion of regulations controlling encryption and high performance computers.
6. Discussion of electronic submission of license applications and supporting documentation.
7. Discussion of export clearance regulations.
8. Consultation with committee on renewal of charter.

Closed Session

9. Discussion of matters properly classified under Executive Order 12958, dealing with the U.S. export control program and strategic criteria related thereto.

A limited number of seats will be available for the public session. Reservations are not accepted. To the extent that time permits, members of the public may present oral statements to the Committee. The public may submit written statements at any time before or after the meeting. However, to facilitate the distribution of public presentation materials to the Committee members, the Committee suggests that presenters forward the public presentation materials prior to the meeting to the following address: Ms. Lee Ann Carpenter, OSIES/EA/BXA MS: 3876, 14th St. & Constitution Ave., N.W., U.S. Department of Commerce, Washington, D.C. 20230.

The Assistant Secretary for Administration, with the concurrence of

the delegate of the General Counsel, formally determined on January 12, 1999, pursuant to Section 10(d) of the Federal Advisory Committee Act, as amended, that the series of meetings or portions of meetings of the Committee and of any Subcommittees thereof, dealing with the classified materials listed in 5 U.S.C. 552b(c)(1) shall be exempt from the provisions relating to public meetings found in section 10(a)(1) and 10(a)(3) of the Federal Advisory Committee Act. The remaining series of meetings or portions thereof will be open to the public.

A copy of the Notice of Determination to close meetings or portions of meetings of the Committee is available for public inspection and copying in the Central Reference and Records Inspection Facility, Room 6020, U.S. Department of Commerce, Washington, D.C. For more information, call Lee Ann Carpenter at (202) 482–2583.

Dated: August 22, 2000.

Lee Ann Carpenter,

Committee Liaison Officer.

[FR Doc. 00–21845 Filed 8–25–00; 8:45 am]

BILLING CODE 3510–JT–M

DEPARTMENT OF COMMERCE

International Trade Administration

[A–337–803]

Notice of Initiation and Preliminary Results of Changed Circumstances Antidumping Duty Review: Fresh Atlantic Salmon from Chile

AGENCY: Import Administration, International Trade Administration, Department of Commerce.

SUMMARY: Based on comments submitted by the petitioners with respect to the recent merger of Chilean salmon producers Marine Harvest Chile, S.A. (Marine Harvest) and Pesquera Mares Australes, Ltda. (Mares Australes), as well as information recently obtained by the Department of Commerce (the Department), we are initiating a changed circumstances review. Pursuant to this review, the Department preliminarily determines that the post-merger Marine Harvest is not the successor-in-interest to either of the pre-merger companies, and is covered by the antidumping duty order on fresh Atlantic salmon from Chile. The Department is directing that liquidation of entries of subject merchandise under the name of Marine Harvest be suspended effective retroactively to July 1, 2000, the date of the merger of Mares Australes and Marine Harvest.

EFFECTIVE DATE: August 28, 2000.

FOR FURTHER INFORMATION CONTACT: Edward Easton or Gabriel Adler, at (202) 482–3003 or (202) 482–3813, respectively; AD/CVD Enforcement Office V, Group II, Import Administration, International Trade Administration, U.S. Department of Commerce, 14th Street & Constitution Avenue, NW, Washington, D.C. 20230.

SUPPLEMENTARY INFORMATION:

Applicable Statute and Regulations

Unless otherwise indicated, all citations to the Tariff Act of 1930, as amended (the Act), are references to the provisions effective January 1, 1995, the effective date of the amendments made to the Act by the Uruguay Round Agreements Act (URAA). In addition, unless otherwise indicated, all citations to the Department's regulations are to 19 CFR Part 351 (1999).

Background

On July 30, 1998, the Department issued an antidumping duty order on fresh Atlantic salmon from Chile. *See Notice of Amended Final Determination of Sales at Less Than Fair Value and Antidumping Duty Order: Fresh Atlantic Salmon from Chile,* 63 FR 40699 (July 30, 1998). The order covered merchandise produced by a number of companies, including Mares Australes. The order excluded merchandise produced by a number of other companies, including Marine Harvest, which had been found to be dumping at a de minimis level in the less-than-fair-value (LTFV) investigation.

On July 15, 1999, the parent company of Mares Australes purchased Marine Harvest. One week after the acquisition, the managing director of Mares Australes formed several task forces of Mares Australes and Marine Harvest officials to discuss how to harmonize and integrate the management of the two companies. By the end of 1999, the companies had laid off redundant management, and had created a single management structure.

Mares Australes and Marine Harvest continued to distinguish salmon produced at their respective facilities, and to export their salmon to the United States under the respective names, until the end of June 2000. On July 1, 2000, the parent company of Mares Australes directed, through a shareholder's meeting, that Mares Australes be formally merged with Marine Harvest, and that the merged entity do business under the name of Marine Harvest. A detailed explanation of these developments can be found in the memorandum from the team to Gary Taverman, dated August 21, 2000 (Mares Australes sales verification report), from the record of the first administrative review of the antidumping duty order on fresh Atlantic salmon from Chile.

On July 25, 2000, the petitioners filed a letter with the Department expressing concern over the merger of Marine Harvest and Mares Australes, and requesting the immediate suspension of liquidation of subject merchandise exported under the name of Marine Harvest.

Scope of the Review

The product covered by this review is fresh, farmed Atlantic salmon, whether imported ''dressed'' or cut. Atlantic salmon is the species *Salmo salar*, in the genus *Salmo* of the family *salmoninae*. ''Dressed'' Atlantic salmon refers to salmon that has been bled, gutted, and cleaned. Dressed Atlantic salmon may be imported with the head on or off; with the tail on or off; and with the gills in or out. All cuts of fresh Atlantic salmon are included in the scope of the review. Examples of cuts include, but are not limited to: crosswise cuts (steaks), lengthwise cuts (fillets), lengthwise cuts attached by skin (butterfly cuts), combinations of crosswise and lengthwise cuts (combination packages), and Atlantic salmon that is minced, shredded, or ground. Cuts may be subjected to various degrees of trimming, and imported with the skin on or off and with the ''pin bones'' in or out.

Excluded from the scope are (1) fresh Atlantic salmon that is ''not farmed'' (*i.e.*, wild Atlantic salmon); (2) live Atlantic salmon; and (3) Atlantic salmon that has been subject to further processing, such as frozen, canned, dried, and smoked Atlantic salmon, or processed into forms such as sausages, hot dogs, and burgers.

The merchandise subject to this investigation is classifiable as item numbers 0302.12.0003 and 0304.10.4093 of the Harmonized Tariff Schedule of the United States (HTSUS). Although the HTSUS statistical reporting numbers are provided for convenience and customs purposes, the written description of the merchandise is dispositive.

Initiation of Changed Circumstances Antidumping Review

Based on the information discussed above, and in accordance with section 751(b)(1) of the Act and section 351.216 of the Department's regulations, the Department is initiating a changed circumstances review to determine whether salmon produced by the entity

known as Marine Harvest, comprised of the recently-merged operations of the former Marine Harvest and Mares Australes, is covered by the antidumping duty order on fresh Atlantic salmon from Chile.

Preliminary Results of Changed Circumstances Antidumping Review

Section 351.221(c)(3)(ii) of the Department's regulations provides that the preliminary results of a changed circumstances review may be issued concurrently with the initiation of the review if the Department determines that expedited action is warranted. As explained below, the Department preliminarily finds that Marine Harvest, after being purchased and subsequently merged with Mares Australes, is no longer the entity that was excluded from the antidumping order. As such, the Department is directing the suspension of liquidation of entries of subject merchandise by Marine Harvest. The Department finds that expedited action is warranted, particularly in light of the fact that the Department recently collected substantial evidence regarding the purchase and merger of Marine Harvest with Mares Australes.

In determining successor-in-interest questions in past cases, the Department typically has examined several factors including, but not limited to, changes in: (1) management; (2) production facilities; (3) supplier relationships; and (4) customer base. *See, e.g., Brass Sheet and Strip from Canada: Final Results of Antidumping Duty Administrative Review*, 57 FR 20460 (May 13, 1992). Such determinations are made based on consideration of the totality of the circumstances. If the evidence demonstrates that, with respect to the production and sale of the subject merchandise, the new company operates as the same business entity as the former company, the Department will accord the new company the same antidumping and countervailing duty treatment as its predecessor.

In this case, the evidence on the record establishes that Marine Harvest, after being purchased and merged with Mares Australes, is substantially different from the pre-merger Marine Harvest. The management of Marine Harvest is now answerable to the parent company of the former Mares Australes, and consists of a number of former Mares Australes officials, including the operations manager. The production facilities of Marine Harvest have changed substantially, by the addition of the large number of hatcheries, freshwater sites, and ocean sites previously owned by Mares Australes (until the merger, the largest exporter of subject merchandise to the United States). Supplier relationships have changed, in that Marine Harvest now purchases virtually all of its feed from an affiliate of Mares Australes (whereas previously it purchased virtually all feed from unaffiliated parties). The customer base of the company has also changed, in that it now includes the distributor clients of Mares Australes, which are fundamentally different from the retail chain clients of the pre-merger Marine Harvest.[1] *See Mares Australes sales verification report.*

The post-merger Marine Harvest is also substantially different from the pre-merger Mares Australes. Though they are now answerable to the parent company of the pre-merger Mares Australes, the current president of the merged company worked for the pre-merger Marine Harvest, as did the manager now in charge of the finance and accounting staff. With the addition of Marine Harvest's large number of freshwater and saltwater salmon growing sites, the operations of the merged company are substantially greater than those of Mares Australes prior to the merger. Moreover, Mares Australes lacked a processing plant, and subcontracted processing services; the merged company now has a large processing plant, and all processing is now done in-house. Finally, Mares Australes' customers were distributors; the customers of the merged company include the retail chain customers of the pre-merger Marine Harvest.

In sum, the merged company now doing business as Marine Harvest is substantially different from both pre-merger Marine Harvest and Mares Australes, and is therefore not the successor-in-interest to either. Given this, the Department preliminarily finds that the entity currently doing business as Marine Harvest is covered by the antidumping order on fresh Atlantic salmon. Accordingly, the Department will instruct the Customs Service to immediately suspend liquidation of all entries of fresh Atlantic salmon from Chile produced and exported under the name of Marine Harvest, that are entered, or withdrawn from warehouse, for consumption, effective retroactively to July 1, 2000, the date of the merger of Mares Australes and Marine Harvest.

In determining what cash deposit rate to assign to Marine Harvest for this purpose, we believe it is more appropriate to assign the rate currently applicable to the pre-merger Mares Australes rather than the currently applicable all others rate. While Marine Harvest is not the successor in interest to Mares Australes, the currently applicable all others rate is higher than any antidumping margin ever assigned to either Marine Harvest or Mares Australes. Given this, we will instruct the Customs Service to require a cash deposit based on the cash deposit rate assigned to Mares Australes in the LTFV investigation, which was 2.23 percent. This requirement for a cash deposit of estimated antidumping duties on Marine Harvest merchandise will continue unless and until it is modified pursuant to the final results of this changed circumstances review.

Public Comment

Interested parties may submit case briefs and/or written comments no later than 14 days after the date of publication of these preliminary results of review. Rebuttal briefs and rebuttals to written comments, limited to issues raised in such briefs or comments, may be filed no later than 21 days after the date of publication. Parties who submit arguments are requested to submit with the argument (1) a statement of the issue, (2) a brief summary of the argument and (3) a table of authorities. Further, we would appreciate it if parties submitting written comments would provide the Department with an additional copy of the public version of any such comments on diskette. Consistent with 19 CFR 351.216(e), the Department will issue the final results of this administrative review, which will include the results of its analysis of issues raised in any such comments, no later than 270 days after the date on which this review was initiated, or within 45 days if all parties agree to our preliminary determination.

This notice is in accordance with section 751(b) of the Act.

Dated: August 22, 2000.

Troy H. Cribb,

Acting Assistant Secretary for Import Administration.

[FR Doc. 00–21929 Filed 8–25–00; 8:45 am]

BILLING CODE 3510–DS–P

[1] According to the managing director of Mares Australes, the parent company of Mares Australes determined that the merged entity should retain the name of Marine Harvest principally because it had better name recognitiion in the U.S. market, and a more developed U.S. distribution system, than Mares Australes.

DEPARTMENT OF COMMERCE

International Trade Administration

[A–588–854]

Certain Tin Mill Products from Japan: Notice of Antidumping Duty Order

AGENCY: Import Administration, International Trade Administration, Department of Commerce.

ACTION: Notice of Antidumping Duty Order.

EFFECTIVE DATE: August 28, 2000.

FOR FURTHER INFORMATION CONTACT: Samantha Denenberg or Linda Ludwig, Antidumping and Countervailing Duty Enforcement Group III, Import Administration, International Trade Administration, U.S. Department of Commerce, 14th Street and Constitution Avenue, NW, Washington, DC 20230, at (202) 482–1386, or (202) 482–3833, respectively.

Applicable Statute and Regulations: Unless otherwise indicated, all citations to the Tariff Act of 1930, as amended (''Act''), are to the provisions effective January 1, 1995, the effective date of the amendments made to the Tariff Act by the Uruguay Round Agreements Act (''URAA''). In addition, unless otherwise indicated, all citations to the Department of Commerce's (''Department'') regulations are to the regulations codified at 19 CFR Part 351 (1999).

Final Determination

On June 19, 2000, the Department determined that certain tin mill products from Japan are being, or likely to be, sold in the United States at less than fair value (''LTFV''), as provided in section 735(a) of the Act. See Notice of Final Determination of Sales at Less Than Fair Value: Certain Tin Mill Products from Japan, 65 FR 39364 (June 26, 2000).

Scope of the Order

The scope of this investigation includes tin mill flat-rolled products that are coated or plated with tin, chromium or chromium oxides. Flat-rolled steel products coated with tin are known as tin plate. Flat-rolled steel products coated with chromium or chromium oxides are known as tin-free steel or electrolytic chromium-coated steel. The scope includes all the noted tin mill products regardless of thickness, width, form (in coils or cut sheets), coating type (electrolytic or otherwise), edge (trimmed, untrimmed or further processed, such and scroll cut), coating thickness, surface finish, temper, coating metal (tin, chromium, chromium oxide), reduction (single- or double-reduced), and whether or not coated with a plastic material.

All products that meet the written physical description are within the scope of this investigation unless specifically excluded. The following products, by way of example, are outside and/or specifically excluded from the scope of this investigation:

- Single reduced electrolytically chromium coated steel with a thickness 0.238 mm (85 pound base box) (±10%) or 0.251 mm (90 pound base box) (±10%) or 0.255 mm (±10%) with 770 mm (minimum width) (±1.588 mm) by 900 mm (maximum length if sheared) sheet size or 30.6875 inches (minimum width) (±1/16 inch) and 35.4 inches (maximum length if sheared) sheet size; with type MR or higher (per ASTM) A623 steel chemistry; batch annealed at T2 ½ anneal temper, with a yield strength of 31 to 42 kpsi (214 to 290 Mpa); with a tensile strength of 43 to 58 kpsi (296 to 400 Mpa); with a chrome coating restricted to 32 to 150 mg/m^2; with a chrome oxide coating restricted to 6 to 25 mg/m^2 with a modified 7B ground roll finish or blasted roll finish; with roughness average (Ra) 0.10 to 0.35 micrometers, measured with a stylus instrument with a stylus radius of 2 to 5 microns, a trace length of 5.6 mm, and a cut-off of 0.8 mm, and the measurement traces shall be made perpendicular to the rolling direction; with an oil level of 0.17 to 0.37 grams/base box as type BSO, or 2.5 to 5.5 mg/m^2 as type DOS, or 3.5 to 6.5 mg/m^2 as type ATBC; with electrical conductivity of static probe voltage drop of 0.46 volts drop maximum, and with electrical conductivity degradation to 0.70 volts drop maximum after stoving (heating to 400 degrees F for 100 minutes followed by a cool to room temperature).
- Single reduced electrolytically chromium- or tin-coated steel in the gauges of 0.0040 inch nominal, 0.0045 inch nominal, 0.0050 inch nominal, 0.0061 inch nominal (55 pound base box weight), 0.0066 inch nominal (60 pound base box weight), and 0.0072 inch nominal (65 pound base box weight), regardless of width, temper, finish, coating or other properties.
- Single reduced electrolytically chromium coated steel in the gauge of 0.024 inch, with widths of 27.0 inches or 31.5 inches, and with T–1 temper properties.
- Single reduced electrolytically chromium coated steel, with a chemical composition of 0.005% max carbon, 0.030% max silicon, 0.25% max manganese, 0.025% max phosphorous, 0.025% max sulfur, 0.070% max aluminum, and the balance iron, with a metallic chromium layer of 70–130 mg/m^2, with a chromium oxide layer of 5–30 mg/m^2, with a tensile strength of 260–440 N/mm^2, with an elongation of 28–48%, with a hardness (HR–30T) of 40–58, with a surface roughness of 0.5–1.5 microns Ra, with magnetic properties of Bm (KG) 10.0 minimum, Br (KG) 8.0 minimum, Hc (Oe) 2.5–3.8, and μ 1400 minimum, as measured with a Riken Denshi DC magnetic characteristic measuring machine, Model BHU–60.
- Bright finish tin-coated sheet with a thickness equal to or exceeding 0.0299 inch, coated to thickness of ¾ pound (0.000045 inch) and 1 pound (0.00006 inch).
- Electrolytically chromium coated steel having ultra flat shape defined as oil can maximum depth of 5/64 inch (2.0 mm) and edge wave maximum of 5/64 inch (2.0 mm) and no wave to penetrate more than 2.0 inches (51.0 mm) from the strip edge and coilset or curling requirements of average maximum of 5/64 inch (2.0 mm) (based on six readings, three across each cut edge of a 24 inches (61 cm) long sample with no single reading exceeding 4/32 inch (3.2 mm) and no more than two readings at 4/32 inch (3.2 mm)) and (for 85 pound base box item only: crossbuckle maximums of 0.001 inch (0.0025 mm) average having no reading above 0.005 inch (0.127 mm)), with a camber maximum of ¼ inch (6.3 mm) per 20 feet (6.1 meters), capable of being bent 120 degrees on a 0.002 inch radius without cracking, with a chromium coating weight of metallic chromium at 100 mg/square meter and chromium oxide of 10 mg/square meter, with a chemistry of 0.13% maximum carbon, 0.60% maximum manganese, 0.15% maximum silicon, 0.20% maximum copper, 0.04% maximum phosphorous, 0.05% maximum sulfur, and 0.20% maximum aluminum, with a surface finish of Stone Finish 7C, with a DOS–A oil at an aim level of 2 mg/square meter, with not more than 15 inclusions/foreign matter in 15 feet (4.6 meters) (with inclusions not to exceed 1/32 inch (0.8 mm) in width and 3/64 inch (1.2 mm) in length), with thickness/temper combinations of either 60 pound base box (0.0066 inch) double reduced CADR8 temper in widths of 25.00 inches, 27.00 inches, 27.50 inches, 28.00 inches, 28.25 inches, 28.50 inches, 29.50 inches, 29.75 inches, 30.25 inches, 31.00 inches, 32.75 inches, 33.75 inches, 35.75 inches, 36.25 inches, 39.00 inches, or 43.00 inches, or 85 pound base box (0.0094 inch) single reduced CAT4 temper in widths of 25.00 inches, 27.00 inches, 28.00 inches, 30.00 inches, 33.00

inches, 33.75 inches, 35.75 inches, 36.25 inches, or 43.00 inches, with width tolerance of ± ⅛ inch, with a thickness tolerance of ± 0.0005 inch, with a maximum coil weight of 20,000 pounds (9071.0 kg), with a minimum coil weight of 18,000 pounds (8164.8 kg) with a coil inside diameter of 16 inches (40.64 cm) with a steel core, with a coil maximum outside diameter of 59.5 inches (151.13 cm), with a maximum of one weld (identified with a paper flag) per coil, with a surface free of scratches, holes, and rust.

• Electrolytically tin coated steel having differential coating with 1.00 pound/base box equivalent on the heavy side, with varied coating equivalents in the lighter side (detailed below), with a continuous cast steel chemistry of type MR, with a surface finish of type 7B or 7C, with a surface passivation of 0.7 mg/square foot of chromium applied as a cathodic dichromate treatment, with coil form having restricted oil film weights of 0.3–0.4 grams/base box of type DOS–A oil, coil inside diameter ranging from 15.5 to 17 inches, coil outside diameter of a maximum 64 inches, with a maximum coil weight of 25,000 pounds, and with temper/coating/dimension combinations of : (1) CAT 4 temper, 1.00/.050 pound/base box coating, 70 pound/base box (0.0077 inch) thickness, and 33.1875 inch ordered width; or (2) CAT5 temper, 1.00/0.50 pound/base box coating, 75 pound/base box (0.0082 inch) thickness, and 34.9375 inch or 34.1875 inch ordered width; or (3) CAT5 temper, 1.00/0.50 pound/base box coating, 107 pound/base box (0.0118 inch) thickness, and 30.5625 inch or 35.5625 inch ordered width; or (4) CADR8 temper, 1.00/0.50 pound/base box coating, 85 pound/base box (0.0093 inch) thickness, and 35.5625 inch ordered width; or (5) CADR8 temper, 1.00/0.25 pound/base box coating, 60 pound/base box (0.0066 inch) thickness, and 35.9375 inch ordered width; or (6) CADR8 temper, 1.00/0.25 pound/base box coating, 70 pound/base box (0.0077 inch) thickness, and 32.9375 inch, 33.125 inch, or 35.1875 inch ordered width.

• Electrolytically tin coated steel having differential coating with 1.00 pound/base box equivalent on the heavy side, with varied coating equivalents on the lighter side (detailed below), with a continuous cast steel chemistry of type MR, with a surface finish of type 7B or 7C, with a surface passivation of 0.5 mg/square foot of chromium applied as a cathodic dichromate treatment, with ultra flat scroll cut sheet form, with CAT 5 temper with 1.00/0.10 pound/base box coating, with a lithograph logo printed in a uniform pattern on the 0.10 pound coating side with a clear protective coat, with both sides waxed to a level of 15–20 mg/216 sq. in., with ordered dimension combinations of (1) 75 pound/base box (0.0082 inch) thickness and 34.9375 inch x 31.748 inch scroll cut dimensions; or (2) 75 pound/base box (0.0082 inch) thickness and 34.1875 inch x 29.076 inch scroll cut dimensions; or (3) 107 pound/base box (0.0118 inch) thickness and 30.5625 inch x 34.125 inch scroll cut dimension.

The merchandise subject to this investigation is classified in the Harmonized Tariff Schedule of the United States (''HTSUS''), under HTSUS subheadings 7210.11.0000, 7210.12.0000, 7210.50.0000, 7212.10.0000, and 7212.50.0000 if of non-alloy steel and under HTSUS subheadings 7225.99.0090, and 7226.99.0000 if of alloy steel. Although the subheadings are provided for convenience and Customs purposes, our written description of the scope of this investigation is dispositive.

Antidumping Duty Order

On August 9, 2000, the International Trade Commission (''Commission'') notified the Department of its final determination pursuant to section 735(b)(1)(A)(i) of the Act that an industry in the United States is materially injured by reason of less-than-fair-value imports of subject merchandise from Japan. Therefore, in accordance with section 736(a)(1) of the Act, the Department will direct Customs officers to assess, upon further advice by the Department, antidumping duties equal to the amount by which the normal value of the merchandise exceeds the export price (or constructed export price) of the merchandise for all relevant entries of certain tin mill products from Japan. These antidumping duties will be assessed on all unliquidated entries of certain tin mill products from Japan entered, or withdrawn from warehouse, for consumption on or after April 12, 2000, the date on which the Department published its notice of preliminary determination in the **Federal Register**. See Notice of Preliminary Determination of Sales at Less Than Fair Value: Certain Tin Mill Products from Japan, 65 FR 19737 (April 12, 2000). On or after the date of publication of this notice in the **Federal Register**, Customs officers must require, at the same time as importers would normally deposit estimated duties, cash deposits for the subject merchandise equal to the estimated weighted-average antidumping duty margins as noted below. The ''All Others'' rate applies to all exporters of subject certain tin mill products not specifically listed. The weighted-average dumping margins are as follows:

Exporter/Manufacturer	Weighted-Average Margin (percent)
Kawasaki Steel Corporation	95.29
Nippon Steel Corporation	95.29
NKK Corporation	95.29
Toyo Kohan	95.29
All Others	32.52

This notice constitutes the antidumping duty order with respect to certain tin mill products from Japan. Interested parties may contact the Department's Central Records Unit, room B–099 of the main Commerce building, for copies of an updated list of antidumping duty orders currently in effect.

This order is published in accordance with section 736(a) of the Tariff Act of 1930, as amended.

Dated: August 18, 2000.

Troy H. Cribb,

Acting Assistant Secretary for Import Administration.

[FR Doc. 00–21930 Filed 8–25–00; 8:45 am]

BILLING CODE 3510–DS–P

DEPARTMENT OF COMMERCE

International Trade Administration

Export Trade Certificate of Review

ACTION: Notice of application to amend an Export Trade Certificate of Review.

SUMMARY: The Office of Export Trading Company Affairs (''OETCA''), International Trade Administration, Department of Commerce, has received an application to amend an Export Trade Certificate of Review (''Certificate''). This notice summarizes the proposed amendment and requests comments relevant to whether the Certificate should be issued.

FOR FURTHER INFORMATION CONTACT: Morton Schnabel, Director, Office of Export Trading Company Affairs, International Trade Administration, (202) 482–5131 (this is not a toll-free number) or E-mail at oetca@ita.doc.gov.

SUPPLEMENTARY INFORMATION: Title III of the Export Trading Company Act of 1982 (15 U.S.C. 4001–21) authorizes the Secretary of Commerce to issue Export Trade Certificates of Review. An Export Trade Certificate of Review protects the holder and the members identified in the Certificate from state and federal government antitrust actions and from private treble damage antitrust actions for the export conduct specified in the

Certificate and carried out in compliance with its terms and conditions. Section 302(b)(1) of the Export Trading Company Act of 1982 and 15 CFR 325.6(a) require the Secretary to publish a notice in the **Federal Register** identifying the applicant and summarizing its proposed export conduct.

Request for Public Comments

Interested parties may submit written comments relevant to the determination whether an amended Certificate should be issued. If the comments include any privileged or confidential business information, it must be clearly marked and a nonconfidential version of the comments (identified as such) should be included. Any comments not marked privileged or confidential business information will be deemed to be nonconfidential. An original and five (5) copies, plus two (2) copies of the nonconfidential version, should be submitted no later than 20 days after the date of this notice to: Office of Export Trading Company Affairs, International Trade Administration, Department of Commerce, Room 1104H, Washington, D.C. 20230. Information submitted by any person is exempt from disclosure under the Freedom of Information Act (5 U.S.C. 552). However, nonconfidential versions of the comments will be made available to the applicant if necessary for determining whether or not to issue the Certificate. Comments should refer to this application as ''Export Trade Certificate of Review, application number 84–11A12.''

Geothermal Energy Association's original Certificate was issued on February 5, 1990 (55 FR 4647, February 9, 1990) and last amended on November 20, 1996 (61 FR 60092, November 26, 1996).

A summary of the application for an amendment follows.

Summary of the Application:

Applicant: Geothermal Energy Association, 1025 Thomas Jefferson Street, NW, Suite 227, Washington, DC 20007.

Contact: Daniela Stratulat, Telephone: (202) 944–8561.

Application No.: 89–8A016.

Date Deemed Submitted: August 15, 2000.

Proposed Amendment: Geothermal Energy Association seeks to amend its Certificate to:

1. Add each of the following companies as a new ''Member'' of the Certificate within the meaning of section 325.2(1) of the Regulations (15 C.F.R. 325.2(1)): Power Engineers, Inc., PO Box 1066, 3940 Glenbrook Drive, Hailey, ID 83333; Bibb & Associates, Inc., 201 South Lake Ave, Suite 300, Pasadena, CA 91101;

2. Change the listing of the company name for the current Member ''Maxwell Laboratories'' to the new listing ''Maxwell Technologies, Inc.''

Dated: August 22, 2000.

Morton Schnabel,

Director, Office of Export Trading, Company Affairs.

[FR Doc. 00–21894 Filed 8–25–00; 8:45 am]

BILLING CODE 3510–DR–P

DEPARTMENT OF COMMERCE

Minority Business Development Agency

[Docket No. 000724217–0217–01; RIN: 0640–ZA08]

Solicitation of Applications for the Minority Business Development Center (MBDC) Program

AGENCY: Minority Business Development Agency, Commerce.

ACTION: Notice.

SUMMARY: In accordance with Executive Order 11625 and 15 U.S. C. 1512, the Minority Business Development Agency (MBDA) is soliciting competitive applications from organizations to operate new and enhanced Minority Business Development Centers (MBDC) under its Minority Business Development Center (MBDC) Program. The new and enhanced MBDC Program is the successor to MBDA's Minority Business Development Center (MBDC) Program, for providing general business assistance to minority-owned companies in various markets throughout the United States.

In order for their proposals to receive consideration, applicants must comply with all information and requirements contained in this Notice.

The MBDC Program represents a significant programmatic and administrative enhancement of MBDA's traditional MBDC Program. In operation since 1982, the MBDCs provide generalized management and technical assistance and business development services to minority business enterprises (MBEs) within their designated geographic service areas. The new and enhanced MBDC program described in this Notice updates the traditional MBDC model by leveraging the full benefit of telecommunications technology, including the Internet, and a variety of online computer resources to dramatically increase the level of service which the MBDCs can provide to their minority business clients.

In addition, the MBDC Program guidelines further increase the impact of the MBDC projects by requiring that project operators not only deploy their business assistance services to the minority business public directly, but that they also develop a network of strategic partnerships with third-party organizations located within the geographic service area. These strategic partnerships will be used to expand the reach of the MBDC project into communities and market segments that the project would have limited resources to cover otherwise, and are a key component of this program modification.

Individuals eligible for assistance under the MBDC Program are African Americans, Puerto Ricans, Spanish-speaking Americans, Aleuts, Asian Pacific Americans, Asian Indians, Native Americans, Eskimos and Hasidic Jews. No service will be denied to any member of the eligible groups listed above.

DATES: The closing date for applications for each MBDC project is September 29, 2000. Anticipated time for processing of applications is 120 days.

MBDA anticipates that awards for the MBDC program will be made with a start date of January 1, 2001. Completed applications for the MBDC program must be (1) mailed (USPS postmark) to the address below; or (2) received by MBDA no later than 5:00 p.m. Eastern Daylight Time. Applications postmarked later than the closing date or received after the closing date and time will not be considered.

ADDRESSES: Applicants must submit one signed original plus two (2) copies of the application. Completed application packages must be submitted to: Minority Business Development Center Program Office, Office of Executive Secretariat, HCHB, Room 5600, Minority Business Development Agency, U.S. Department of Commerce 14th Street and Constitution Avenue, NW, Washington, DC 20230.

If the application is hand-delivered by the applicant or its representative, the application must be delivered to Room 1874, which is located at Entrance #10, 15th Street, NW, between Pennsylvania and Constitution Avenues. Applicants are encouraged to submit their proposal electronically via the World Wide Web. However, the following paper forms must be submitted with original signatures in conjunction with any electronic submissions by the closing date and time stated above: (1) SF–424, Application for Federal Assistance; (2) the SF–424B, Assurances-Non-Construction Programs; (3) the SF-LLL

(Rev. 7–97) (if applicable), Disclosure of Lobbying Activities; (4) Department of Commerce Form CD–346 (if applicable), Applicant for Funding Assistance; and (5) the CD–511, Certifications Regarding Debarment, Suspension and Other Responsibility Matters; Drug-Free Workplace Requirements and Lobbying. MBDA's web site address to submit an application on-line is www.mbda.gov/e-grants. All required forms are located at this web address.

Failure to submit a signed, original SF–424 with the application, or separately in conjunction with submitting a proposal electronically, by the deadline will result in the application being rejected and returned to the applicant. Failure to sign and submit with the application, or separately in conjunction with submitting a proposal electronically, the other forms identified above by the deadline will automatically cause an application to lose two (2) points. Failure to submit other documents or information may adversely affect an applicant's overall score. MBDA shall not accept any changes, additions, revisions or deletions to competitive applications after the closing date for receiving applications, except through a formal negotiation process.

FOR FURTHER INFORMATION CONTACT: For further information, contact the MBDA Regional Office for the geographic service area in which the project will be located.

Pre-Application Conference: A pre-application conference will be held for each MBDC project solicitation. Contact the MBDA Regional Office for the geographic service area in which the project will be located to receive further information. Proper identification is required for entrance into any Federal building.

SUPPLEMENTARY INFORMATION: Following are the geographic service areas for which applications are being solicited: Atlanta, Louisville, Miami/Ft. Lauderdale, Puerto Rico Islandwide, Raleigh/Durham/Charlotte, South Carolina Statewide, Chicago, Ohio Statewide, Corpus Christi, Dallas/Ft. Worth, Denver, El Paso, Houston, New Mexico Statewide, Oklahoma City, San Antonio, Queens/Brooklyn, Manhattan/Bronx, New Jersey Statewide, Philadelphia, Williamsburg (Brooklyn), Alaska Statewide, Arizona Statewide, Honolulu, East Los Angeles County, South Los Angeles County, West Los Angeles County.

Authority: Executive Order 11625 and 15 U.S.C. 1512.

CATALOG OF FEDERAL DOMESTIC ASSISTANCE (CFDA): 11.800 Minority Business Development Center Program.

Program Description

For the past 18 years, MBDA has operated the MBDC Program as its approach for providing general business assistance and counseling to minority business enterprises. MBDA established MBDCs in numerous cities throughout the country to assist in the development of local minority firms. The MBDC Program was developed to address the needs of the majority of minority-owned firms throughout the country at a basic level, and thus the traditional MBDCs are not designed to provide specialized expertise in any specific industry.

Through its new and enhanced MBDC Program, MBDA is now providing major enhancements to the traditional MBDC Program, by leveraging the full benefit of telecommunications technology, including the Internet, and a variety of online computer-based resources to dramatically increase the level of service which the new Centers can provide to their clients.

This enhanced approach also increases the reach of the Centers by requiring project operators to develop strategic alliances with public and private sector partners, as a means of reaching out to minority firms within the project's geographic service area.

Background

Under the original MBDC Program, MBDA traditionally operated as many as 100 Centers in strategic locations throughout the country, for the benefit of minority entrepreneurs. MBDA selected locations for the establishment of these Centers based on the size of the population in those markets, and the number of minority-owned companies, as established by U.S. Census Bureau data. While this approach to site selection continues under the new MBDC Program, MBDA will award a fewer number of projects in total, in light of the performance benefits the Program stands to gain from the increased use of technology and strategic partnering.

In addition, like the original MBDC Program, the new and enhanced MBDC Program will be a mainstay of MBDA's overall business development efforts. The new and enhanced MBDC Program is at the core of the Agency's comprehensive strategy for addressing the needs of growing minority firms. Under this strategy, MBDA has identified the following four types of services which an MBDC will generally be expected to provide:

1. *Access to Markets*—This involves assisting MBEs to identify and exploit opportunities for increased sales and revenue. Activities include conducting market analysis, identifying sales leads, bid preparation assistance, creating market promotions, and assistance in developing joint ventures and strategic alliances.

2. *Access to Capital*—This involves assisting MBEs to secure the financial capital necessary to start-up, and thereafter to fuel growth and expansion of their businesses. Undercapitalization has been a major contributor to the failure of business ventures in the minority community over the years. Hence the goal of this activity is to help minority entrepreneurs obtain the amount of financing appropriate to the scope of the proposed business and, thereby, to help ensure the greatest likelihood of success for the minority venture in the marketplace.

3. *Management and Technical Assistance*—This component of MBDA's approach involves assisting minority firms in establishing, improving and/or successfully maintaining their business and/or to resolve key operational issues within the business. Such issues might include the need for a recruitment and hiring strategy, evaluating a capital equipment purchase, or developing internal operating procedures.

4. *Education and Training*—This involves providing basic education and training to minority entrepreneurs on important business topics. Training should be hands-on, practical, and streamlined in order to reflect the time constraints of the typical small business owner. In addition, given the proliferation of online resources from MBDA as well as others, this training should be designed to educate MBEs in the use of the Agency's electronic business assistance tools and in the use of electronic commerce generally to better access suppliers, customers and information.

Like the original MBDCs, the new and enhanced MBDCs will operate through the use of trained professional business counselors who will assist minority entrepreneurs through direct client engagements. To date, MBDA has served more than 530,000 minority businesses through its Centers, enabling these companies to grow and expand, creating new jobs, increasing tax revenues, and contributing to the health of the overall economy.

Enhancing the MBDCs through Technology

Over the past three years, MBDA has developed a variety of new technology tools designed to leverage the benefits of

information technology to assist the minority business community. In addition, the Agency has developed a high-speed network strategy capable of linking all of its Centers into a single virtual organization. The goal of MBDA's new and enhanced MBDC Program strategy is to deploy these technology enhancements to all of the MBDCs, and create a state-of-the-art environment for bringing minority businesses continuously-updated information, access to resources anywhere in the country, and the best available assistance in any given subject area at any time. The implementation of this strategy is the Minority Business Internet Portal (MBIP).

MBDA's technology tools that will be made available to the MBDCs through MBDA's MBIP site include:

• *Phoenix/Opportunity*—an electronic bid-matching system that alerts participating minority companies of contract and teaming opportunities directly via e-mail. Procurement leads are transmitted to minority firms on a targeted basis according to the company's industry classification and geographic market. Firms seeking to participate in this program need only to transmit their company profile to MBDA online via the Agency's Phoenix database.

• *Resource Locator*—a new and unique software application that allows minority business enterprises to search for business resources and locate them on a map—interactively on the Internet. Resource Locator can help minority firms identify trade associations representing their industries, government licensing and permit offices, management and technical assistance providers, and a host of other resources quickly and efficiently, through GIS technology.

• *Online Commercial Loan Identifier*—an Internet-based tool that allows minority enterprises to shop for commercial loans online, and identify the best available financing terms. The Commercial Loan Identifier is designed to give minority firms the benefit of a nationwide market for commercial loan products.

• *Business and Market Planning Software*—software packages to streamline and enhance the development of business plans, marketing plans and other strategic business documents.

The MBIP will serve as a very effective vehicle for enhancing the scope and service capability of the MBDC network. Through the portal site, each MBDC will receive a standardized electronic toolkit of business development tools and applications. This ''electronic toolkit'' will provide important programmatic benefits for the MBDCs.

Specifically:

• These electronic tools will help to streamline the process of delivering client assistance to minority business enterprises, giving the Centers the ability to service greater numbers of clients with existing resources.

• In addition, MBDA expects that these electronic tools will be in high demand because of the significant added value that they are able to create for business enterprises. Demand for these tools will further enhance the position of the MBDCs as important resources within their local markets.

• Finally, by participating in MBDA's nationwide high-speed network, each MBDC will be able to access the latest information regarding best practices, emerging market trends, success strategies, and other activities in the minority business development arena.

Current trends in technology, procurement streamlining, globalization, and a host of other market factors have had a dramatic impact on the minority business community. Minority-owned businesses, regardless of their industry, now find themselves subject to rapidly changing market conditions. To ensure their continued growth, these firms will need access to the best available information and expertise on a continuously updated basis. The new MBDC Program, combined with the MBIP site, directly respond to this need, by leveraging MBDA's traditional business development infrastructure through state-of-the-art technology and communications.

Work Requirements

The work requirements specify the duties and responsibilities of each recipient operating an MBDC.

Although it is not necessary for the applicant to have an office in the geographic service area, the MBDC office must be strategically located in the geographic service area to ensure that it is close to the available public and private sector resources, within a reasonable commuting distance to the minority business community, and accessible to public transportation. The MBDC must be opened and be fully operational within 30 days after receipt of the award. Fully operational means that all staff are hired, all signs are up, all items of furniture and equipment are in place and operational, and the MBDC's doors have been fully opened to the public for service.

An MBDC operator must provide services to eligible clients within its specified geographic service area. In addition, each operator must contribute its efforts to help support MBDA's online business assistance network as established by Agency policies.

MBDCs are required to perform work in four basic areas:

1. Market Building

To identify, develop and leverage public and private sector resources and business opportunities for their clients;

(a) *Market Research and Development* which systematically investigates the service area market to see what business and capital opportunities exist for minority business enterprise (MBE) development; search for sources of capital, sales opportunities, business buy-outs and new start possibilities; bring the research to a practical level of utility to fit the capability and needs of specific MBE client firms of the area. As market research is conducted, the MBDC will make optimum use of the MBDA network to ensure that the information is made available to fellow MBDC operators, and to MBEs throughout the country.

(b) *Market Promotion* which promotes minority business development in the local business community by obtaining support from the community, as a whole for the utilization of minority-owned business, is in the best interests of the local market.

The MBDC will promote individual firms to the public and private sectors to make the market aware of the capability, talent and capacity of the local MBE firms. The MBDC may utilize public service announcements and paid advertising. The MBDC promotes MBEs at local Chambers of Commerce, business and trade associations, corporate and company trade fairs and meetings, state and local government agency purchasing departments, economic development and planning offices and MBE development events. In addition, the MBDC shall promote and participate in MED Week activities involving the full participation of the private and public sectors. MED Week is a major annual event of MBDA on both the local and national levels.

Under this function, the MBDC shall carry out a plan-of-action that may include, but is not limited to, the following actions: (1) Publicize the MBDC and its services throughout the geographic service area; (2) Organize press briefings or distribute press releases for area newspapers; (3) Deliver speeches before key minority audiences in the MBDC service area; (4) Secure a list of service area minority vendors who are listed in MBDA's Phoenix System and use them in market

promotion activities; (5) Interface with minority Chambers of Commerce and trade associations for access to their mailing lists; (6) Communicate with bankers and other officers of financial institutions for possible referrals of minority entrepreneurs as existing prospective minority clients to the MBDC; (7) Identify existing lists of successful minority managers, professionals, technical experts and skilled crafts-people, who may have an interest in or exhibit qualifications for business ownership; (8) Develop an MBDC brochure for mail-out and distribution to the public, as well as for inclusion on the MBDA web site; and (9) E-mail information and/or newsletters to existing and prospective local minority entrepreneurs.

(c) *Resource and Inventory Development* which identifies local opportunities and resources as well as local minority businesses, qualified to take advantage of them. This requirement will enable the MBDC to support the maintenance of content for the Phoenix/Opportunity databases and other online systems as well as to track local market trends and market demand for goods and services. Under this function, the MBDC must (1) Develop and maintain inventories of area opportunities and resources, which should include: *Electronic Commerce*—information technology affecting the marketability of its clients, *i.e.*, access to new markets, access to capital and business opportunities and other resources; *Market Opportunities*—both in the public sector (Federal, state and local) and in the private sector (foreign and domestic); *Capital Opportunities*—*e.g.*, loans, bonds, trade credits, and equity investments; *Business Ownership Opportunities*—*e.g.*, franchises, licensing arrangements, mergers and buy-outs; *Education and Training Opportunities*—*e.g.*, educational institution programs and other training resources; (2) Register eligible local minority firms in MBDA's Phoenix database, which is a national inventory of minority vendor firms capable of selling their goods and services to the public and private sector.

(d) *Match Opportunities and Close Transactions* which matches eligible minority entrepreneurs with specific viable businesses, market and/or capital opportunities. This function contributes to an MBDC's financial packaging and/or procurement performance goals, and is the *only* MBDC market development function outside of the standard client business assistance in which a portion of an MBDC's time can be directly associated to *individual* minority business clients and resource customers. This client specific time, no matter how small, is considered client assistance and may be subject to client fees. Under this function, the MBDC shall match qualified minority entrepreneurs with identified opportunities and resources by: (1) Accessing vendor information systems, including the Phoenix/Opportunity databases; (2) Maintaining a constant awareness of the minority firms that operate within the geographic service area and their capabilities; (3) Maintaining direct contact with purchasing executives, government procurement officials, banking officials and others so that representatives of the MBDC are in a position to learn about available business opportunities, both formally and informally; (4) Engaging in relationship brokering between purchasing organization and individual minority firms capable of fulfilling their requirements; and (5) Assisting in direct negotiations between purchasing organization and individual minority firms, in appropriate cases, in order to help resolve issues, serve as an advocate for the minority firm, or otherwise assist in bringing the transaction to closure.

2. Client Services

To provide direct client assistance to minority business enterprise on the basis of individualized professional engagements. Under these duties, the MBDC shall assist minority firms and individuals, which have agreed in writing to become MBDC clients, in establishing, improving and/or successfully maintaining their businesses. All new clients shall be entered into the Performance database and registered in the Phoenix System. It is required that clients and their service hours should be entered in the Performance database on a regular basis, preferably weekly.

This assistance is defined as the function by which the MBDC provides direct services to its clients. It may range from general counseling to the identification, analysis and resolution of specific business problems. Clients assisted more than once during the funding periods may only be counted once in that funding period. Group sessions are one method an MBDC can use to provide business development services to minority clients. This function may be subject to client fees and directly contributes to an MBDC's performance goals.

Under this function, the MBDC shall provide assistance to eligible minority firms and individuals (as referenced in Executive Orders 11625 and 12432) seeking assistance from the MBDC, including 8(a) certified and graduate firms. However, the MBDC shall not perform or engage in the operation of a firm. Client services include, but are not limited to, the following types of assistance: (1) *Marketing, e.g.*, market research, promotion, advertising and sales, sales forecasting, market feasibility studies, pricing, procurement assistance, product and customer service, brochure design (excludes mass printing), and general counseling; (2) *Finance and Accounting, e.g.*, capital budgeting, general accounting, break-even analysis, cost accounting, financial planning and analysis budgeting, tax planning, financial packaging, general counseling, and mergers and acquisitions (excludes bookkeeping, tax preparation, and audits); (3) *Manufacturing, e.g.*, plant location and site selection, plant management, materials handling and distribution, total quality management, metrication for world market, and general counseling; (4) *Construction and Assistance, e.g.*, estimating, bid preparation, bonding, take-offs, and general counseling; (5) *International Trade Assistance, e.g.*, exporting, importing, letters of credit, bank draft, dealerships, agencies, distributorship, exporting trading companies, joint ventures, general counseling, and freight forwarding and handling; (6) *Administration, e.g.*, office management, procedures and systems, inventory control, purchasing, total quality management, awareness of metric system, and general counseling; (7) *Personnel, e.g.*, human resource management, job evaluation and rating system, training, and general counseling; (8) *General Management, e.g.*, organization and structure, formulating corporate policy, feasibility studies, reports and controls, public relations, staff scheduling, legal services (excludes litigation), business planning, organizational development, bid preparation, and general counseling.

In order to stay competitive in the increasingly global economy, minority business owners should consider ISO 9000 or other quality assurance standards. The MBDC must have knowledge of what these standards are, how to properly implement the standards, and how to obtain ISO 9000 Quality System certification for its clients.

The one-on-one assistance to any client shall be limited to no more than 250 hours per funding period unless prior approval is requested from the appropriate MBDA Regional Director, and granted by the Grants Officer of the Department of Commerce.

3. Operational Quality

To maintain the efficiency and effectiveness of its overall operations as well as the quality of its client services. These duties are the means by which an MBDC maintains the efficiency and effectiveness of its overall operations as well as the quality of its client services. The function directly contributes to an MBDC's overall qualitative evaluation and rating as well as the successful completion of all work requirements. Under this function, the MBDC shall: (1) Execute signed work plan agreements and engagement letters with clients; (2) Formally describe the methodology that will be used in achieving the work plan objectives for each client; (3) Input progress/results to the performance database in a timely manner; (4) Establish procedures for collecting and accounting for all fees charged to clients; (5) Maintain records/files for all work charged to the program and clients; (6) Obtain *written* acceptance and verification (with client signatures) of services provided to its clients. For services reported, documentation must be in the MBDC's client files within 30 days after the end of every quarter in which a client receives services; (7) Comply with all reporting requirements provided upon award; (8) Cooperate with MBDA in maintaining content for the Phoenix/Opportunity databases, Resource Locator, and other online tools located at *www.mbda.gov;* and (9) Promote and utilize the services and resources of other MBDA programs, sponsored efforts and/or voluntary activities. The MBDC shall identify MBDA as the funding sponsor by providing signs worded as follows:

(geographic area) _____

Minority Business Development Center ™

Operated by _____

Funded By: Minority Business Development Agency (MBDA), U.S. Department of Commerce

Minority Business Development Center

These signs should be highly visible to the MBDC clients and general public. They should be prominently displayed on entrances and doors. Include the name of MBDA on all stationery, letterhead, brochures, etc. The MBDC is *not* authorized to use either the Department's official seal or the MBDA logo in any of its publications, documents or materials without specific written approval from the U.S. Department of Commerce. Identify the MBDC immediately when answering the telephone. If the recipient also requires that its organization's name be given, it should be provided only *after* the MBDC has been verbally identified to a caller. Refer to MBDA in all advocacy and outreach efforts such as speaking engagements, news conferences, etc.

The term *Minority Business Development Center (MBDC)* is a trademark of the Federal Government, and the Government reserves exclusive rights in the term. Permission to use the term is granted to the award recipient for the sole purpose of representing the activities of the award recipient in the fulfillment of the terms of the financial assistance award. The Minority Business Development Agency reserves the right to control the quality of the use of the term by the award recipient. Whenever possible, for example in promotional literature and stationery, use the ™ designation as in *Minority Business Development Center*™.

4. Developing and Maintaining a Network of Strategic Partners

The work requirements for an award recipient under the MBDC Program include the development of a network of 15 alliances between the MBDC and key strategic partners selected by the recipient. The MBDC is required to establish the network of 15 Strategic Partners within 120 days after the award. The MBDC is required to maintain these alliances throughout the duration of the award. The MBDC must replace a Strategic Partner within 45 days after termination of a previously established alliance. The Strategic Partners shall be public or private sector organizations located within the project's geographic service area that are positioned to assist the project to achieve its goals for assisting the minority business community established under the terms of the award. Strategic Partners may include:

- Minority Business Enterprise (MBE) programs operated by state, county or city governments;
- Chambers of Commerce or trade associations focused on the needs of the minority business community;
- Small Business Development Centers, or other college and university entrepreneurial development programs;
- Community Development Corporations (CDCs);
- Banks and financial institutions; and
- Faith organizations having economic development components, whose activities are *not* used for purposes the essential thrust of which is sectarian.

Each Strategic Partner shall be evidenced by a written Memorandum of Understanding (MOU) that expressly sets forth the conditions under which the partners agree to operate. Specifically, the Strategic Partners must agree to serve as a local resource for minority-owned businesses seeking to obtain MBDC services. The Strategic Partner must at a minimum:

- Provide effective guidance to minority entrepreneurs in accessing MBDA's computer-based business assistance tools that are available on-site at the Strategic Partner's location.

Example of other kinds of activities that might be required of the Strategic Partner include, but are not limited to:

- Designate appropriate office space within their facilities for providing MBDC services;
- Establish a library of training materials, how-to guides, business publications and other information, both in print and electronic format, to be made available to minority entrepreneurs on a walk-in basis;
- Provide high-quality business counseling to minority business enterprises if the Strategic Partner is one that offers direct client counseling;
- Provide intake services for the MBDC with respect to minority firms who approach the Strategic Partner for assistance but require counseling by the MBDC;
- Provide minority firms with high-quality referrals to outside resources where the firm has a need for specialized assistance which is outside the scope of the MBDC Program;
- Support the MBDC project in coordinating MED Week activities within the geographic service area.

In selecting Strategic Partners, each award recipient should consider establishing a diverse group that appropriately reflects the needs of the minority business community within the service area. The skills, abilities and areas of concentration on the part of the Strategic Partners should be complementary, and collectively the skills and abilities of the Strategic Partners should complement those of the MBDC project operator.

In exchange for its compliance with the foregoing terms, and such other terms as the parties may seek to establish, the Strategic Partner will be eligible to serve as a host for the MBDA suite of business development tools described in the Enhancing the MBDCs Through Technology subsection of this Notice. The Strategic Partner will also be authorized to make public its relationship with MBDA through the MBDC project, and to refer to the partnership in brochures, advertisements, press releases and other media. Through the MOU relationship, the Strategic Partner will also be entitled to receive direct access to

MBDA's information base of case studies, best practices, market research, and statistical data.

Computer Requirements

MBDA requires that all award recipients meet certain requirements related to the acquisition, installation, configuration, maintenance and security of information technology (IT) assets in order to ensure seamless and productive interface between and among all grant recipients, minority-owned businesses, the MBDA Federal IT system and the public. These required assets and their configuration are hereinafter referred to as the ''enterprise.'' The basic components of the enterprise are the desktop workstations, the server, local area network (LAN) components and a connection to the Internet.

At a minimum, each grantee shall provide one (1) desktop computer for the exclusive use of each employee delivering minority business assistance to the public under an award from MBDA. All desktop computers shall be inter-connected with a Server computer using an Ethernet protocol enabling communication with all workstations on the network. The Server shall have a constant, active connection to the Internet during all business hours. The recipient shall ensure that each of his/her employees, to include management, administrative personnel, contractors, full-time, part-time, and non-paid (volunteer) staff have a unique electronic mail (email) address available to the public. Each grantee shall design, develop and maintain, in accordance with the computer requirements, a presence on the Internet's World Wide Web and shall maintain appropriate computer and network security precautions during all periods of funding by MBDA. All IT requirements, as described herein, shall be met within 30 calendar days after the award.

1. *Network Design:* At all locations where services are delivered to the eligible public as defined by Executive Order 11625, the recipient shall operate a ''Client-Server'' configured local area network (LAN) enabling each staff person delivering services to the eligible public exclusive access to a personal computer workstation during all business hours. MBDA shall, from time to time, designate certain configurations of the enterprise hardware and software to meet interface requirements. Currently, MBDA recommends servers use an operating system that is fully compatible with Microsoft Windows NT 4.0 with a service pack five (5) update. Primary Domain Control (PDC) servers or any server providing principal service to the desktops shall contain 18 or more gigabytes (GB) of hard drive space using two or more 9 GB+ disks configured appropriately to ensure data retention should one disk fail. At least one (1) Pentium III processor (CPU), or a CPU ensuring similar speed, shall be used in the PDC server or any other server providing principal service to the desktops. Web servers, mail servers and/or servers maintained by a third party such as an Internet Service Provider (ISP) shall meet the minimum server specifications as stated herein. A ''trusted'' relationship, as appropriate, shall be established and maintained between the MBDA PDC server and those operated by, or operated for, the recipient to ensure access by MBDA system administration personnel during normal business hours. (In a network that consists of two or more domains, each domain acts as a separate network with its own accounts database. Even in the most rigidly stratified organizations, some users in one domain will need to use some or all of the resources in another domain. The usual solution to confirming user access levels among domains is what's called a trust relationship.) From time to time, MBDA will require access to servers and desktop workstations after business hours and on holidays and weekends. For this purpose, the recipient shall ensure appropriate communications links are active and appropriate personnel on station, upon 24-hour notice from MBDA.

2. *Desktop Workstations:* All desktop systems shall be not less than two (2) calendar years old at time of award and shall contain a processor (CPU) operating at speeds not less than 400 Megahertz (Mhz). Each desktop system shall contain a hard drive with a storage capacity of at least 5 GB. All desktop systems shall have installed an operating system fully compatible with Microsoft Windows NT with MS Office 97 Professional Edition or higher, Microsoft Internet Explorer 4.x. Since workstations may be linked to a live, two-way conference connection with potential clients, at least 50% of all employee workstations shall be fully operational with a qualified staff person positioned at the keyboard during all business hours to include lunch and break periods.

3. *Maintenance and Security:* A network map (''as-built'') reflecting adherence to the computer and networking requirements set forth herein shall be maintained by the recipient for review by MBDA at any time. Each recipient shall designate and train one administrative person competent in the operation of an operations system fully compatible with Windows NT 4.0 network and local area network (LAN) technology as described herein. If a firewall, proxy server or similar security component is used, MBDA's server shall be ''trusted'' for full access to all files relevant for network and administrative operations. From time to time, MBDA shall require certain software be loaded on servers and desktops. In any given year, the cost of this additional software should not exceed $200.00 per workstation and $500.00 per server. Every employee of the Center shall be assigned a unique username and password to access the system. Every employee shall be required to sign a written computer security agreement. (A suggested format for the computer security agreement will be provided at the time of award.) Every manager, employee, and contractor and any other person given access to the computer system shall sign the security agreement and an original copy of the signed agreement shall be kept in the Center's files. A photocopy of the agreement shall be sent by fax to MBDA at: (202) 482–2696 no later than 30 days after the award. All subsequent new hires and associations requiring access to Center or MBDA systems shall read, understand and sign the security agreement prior to issuance of a password. No employee shall have access to the MBDA system without a signed security agreement on file at MBDA.

4. *Web site*: Each recipient shall create and maintain a public web site using a unique address (*e.g.*, www.center-name.com). The first page (Index page) of the web site shall clearly identify the recipient as a Minority Business Development Center funded by the U.S. Department of Commerce's Minority Business Development Agency. The Index page of the web site shall load on software fully compatible with Windows Internet Explorer 4.x browser software using a normal home computer with 56Kb/s analog phone line connection in less than ten (10) seconds. The web site shall contain the names of all managers and employees, the business and mailing address of the Center, business phone and fax numbers and email addresses of the Center and employees, a statement referencing the services available at the Center, the hours under which the Center operates and a link to the MBDA homepage (www.mbda.gov). For purpose of electronically directing clients to the appropriate Center staff, the web site shall also contain a short biographical statement for each employee of the Center including management, contractors, part-time, full time, and

non-paid (volunteer) personnel, providing services directly to the eligible public under an award from MBDA. This biographical statement shall contain: the full name of the employee, and a brief description of the expertise of the employee to include academic degrees, certifications and any other pertinent information with respect to that employee's qualifications to deliver minority business assistance services to eligible members of the public.

No third party advertising of commercial goods and services shall be permitted on the site. All links from the site to other than federal, state or local government agencies and non-profit educational institutions must be requested, in advance and in writing, through the Chief Information Officer, MBDA Office of Information Technology Services to the Grants Office for written approval. Such approval shall not be unreasonably withheld but approval is subject to withdrawal if MBDA determines the linked site unsuitable. No employee of the Center, nor any other person, shall use the Center web site for any purpose other than that approved under the terms of the agreement between the recipient and MBDA. Every page of the web site shall be reviewed by the recipient for accuracy, currency, and appropriateness every three (3) months. Appropriate privacy notices and handicapped accessibility will be predominately featured. From time to time, MBDA shall audit the recipient's web site and recommend changes in accordance with the guidelines set forth herein.

5. *Time for Compliance*: Within 30 days after the award, the recipient shall report via email to the Chief Information Officer, MBDA Office of Information Technology Services and the Grants Officer that he/she has complied with all technical requirements as specified herein. Within 30 days after the award, the recipient shall report the name, contact telephone numbers and email addresses of the Project Director, Network or System Administrator. As appropriate, the recipient shall also provide the telephone number and email address for the Technical Contact at the Internet Service Provider (ISP) providing Internet access for the grantee, the IP number of the Domain Name Server (DNS) and/or Primary Domain Control (PDC) server, and any other technical information as specified in the Technology Requirements.

6. *Performance System*: All required performance reporting to MBDA shall be conducted via the Internet using the Performance system to be found at a secure web site (partner.mbda.gov). Within 30 days after the award, each business development specialist (BDS) and/or anyone providing business assistance to the public under the award shall have satisfactorily completed the Performance System Training Course (PSTC). This course is available on-line from the Performance web site (partner.mbda.gov). Only those persons giving direct assistance to the eligible public shall be given passwords and access to enter Performance data into the system. Only trained staff shall enter data into the Performance system. The person giving service to the client should enter performance data, not by administrative personnel. There shall be no ''sharing'' of passwords on the Performance system. Although not required, MBDA encourages input of information on a daily basis.

7. *Data Integrity*: The recipient shall take the necessary steps to ensure that all data entered into MBDA systems, and systems operated by the recipient in support of the award, or by any employee of the recipient is accurate and timely.

Performance Measures

In accordance with 15 CFR Parts 14 and 24, applicants selected will be responsible for the effective management of all functions and activities supported by the financial assistance award. Recipients will be required to use program performance measures in a performance report due thirty (30) days after the end of the second quarter and to provide an end-of-year assessment of the accomplishments of the project using these measures. The end-of-year or final performance report is due 90 days after the end of the budget year. Once the project is awarded, the evaluation criteria, along with the assigned weight value, to be used for measuring the MBDC project performance on an ongoing basis are:

1. The number of completed work products (20);
2. The dollar value of transactions (40);
3. The number of Strategic Partners (20);
4. Operational Quality (20)
- Number of new clients (5);
- Number of Client Service Hours (5);
- Client Satisfaction (5);
- Management Score (5).

The minimum performance goals required for the above listed performance measures for each of the solicited geographic service areas are outlined under the Funding Availability sub-heading for each geographic service area. The minimum performance goals are listed on an annual basis and will be broken out into quarterly increments by recipients, within 30 days after the award, for actual evaluation purposes.

Definitions

Completed Work Product—Completed work product consists of work assignments which the project performs under a professional engagement of an eligible client firm. For a task to constitute completed work product it is necessary that the task:

(1) be one requiring the business expertise of the project staff;

(2) be agreed to by the client;

(3) be fully completed and delivered to the client; and

(4) be performed in a high quality and professional manner.

Dollar Value of Transactions—The dollar value of completed financial transactions represents the total principal value of executed contracts, approved loans, equity financing, acquisitions, mergers, or other binding financial agreements secured by clients of the project, with the assistance of project staff. For purposes of this performance element, eligible financial transactions are those which have a specific dollar value, and which increase the revenues of the client firm, expand its capital base, or produce some other direct commercial benefit for client firms. In order to be deemed complete, a financial transaction must be documented by an executed and binding agreement between the client firm and a party capable of performing its obligations under the terms of the agreement.

MBDA recognizes that the financial obligations evidenced by these transactions may be long-term, and require performance over an extended period. Consequently it is not necessary that the funds or other financial value specified under the agreements have actually changed hands for the project to receive credit under this performance element, so long as the agreement of the parties is documented and binding.

Strategic Partners—Strategic partners are those organizations with whom the recipient enters into specific agreements for mutual support. Strategic partners may be either public or private sector institutions, must have a clear mission, and must have a permanent organizational structure. Individuals or organizations that have a loosely defined structure or that operate on an ad hoc basis will not be considered as strategic partners for purposes of this performance element. MBDA will have no relationship with or responsibility to strategic partners.

In order to get credit for obtaining a strategic partner, a project operator must prepare a written agreement identifying:

(1) the responsibilities and duties which the project and the strategic partner each agree to undertake;

(2) the resources which each party agrees to commit to the partnership;

(3) the goals which the project and the strategic partner each seek to achieve by entering into the partnership; and

(4) the point of contact within the strategic partner organization for issues involving the partnership.

(5) that strategic partners will not be allowed to charge and collect fees for services related to the project.

Operational Quality—Operational quality refers to the quality and effectiveness of the project operator's delivery of client services, as evidenced by the following performance elements relating to the day-to-day management of the project:

(a) number of new clients;

(b) number of client service hours;

(c) client satisfaction; and

(d) management assessment.

Client satisfaction will be determined through a consultation process with clients of the individual MBDC. The consultation will be used to rate the level of quality for client satisfaction.

The management assessment reflects MBDA's own evaluation of the overall management of the project, based on the Agency's internal review of the project's operations. The management assessment reflects such areas as the development of written engagement letters and work plans, proper staffing, adherence to scheduled work hours, recordkeeping, and any other areas which MBDA may deem to be relevant to determining the overall quality of the project's operations.

Performance Standards

The year-to-date performance of an MBDC will be based on the following rating system:

Minimum required percent of goals needed for each rating category	Minimum required points needed for each rating category	Rating categories
100% and above*	Above 100**	Excellent.
At least 90%	90–100	Commendable.
At least 80%	80–90	Good.
At least 75%	75–79	Satisfactory.
At least 70%	70–74	Marginal.
Below 70%	Below 70.0	Unsatisfactory.

Not to exceed 110%.
Not to exceed 110 points.

Performance Incentives

MBDA recognizes and rewards those MBDCs that have maintained high performance throughout their award (three funding periods). MBDCs can earn additional 2 bonus funding periods without competition based upon their overall actual year-to-date performance for the duration of the award. The MBDC Performance Standards outlined above allow each MBDC with an overall ''excellent'' rating for its performance during the initial competitive funding period to qualify for up to 2 additional funding periods without further competition. A year-to-date excellent rating for the first two funding periods and part of the third funding period of an award will result in ''bonus funding periods'' as follows:

- Performance of at least 25% above the minimum goal in each performance element for at least 28 months will allow an MBDC to receive one bonus funding period. Therefore, the award can total up to four funding periods prior to a required competition.
- Performance of at least 25% above the minimum goal in each performance element for at least 6 months of the first bonus funding period will allow an MBDC to receive a second bonus funding period. Therefore, the award can total up to five funding periods prior to a required competition.

No MBDC award may be longer than five funding periods without competition no matter what an MBDC's performance happens to be.

Funding Availability: MBDA anticipates that a total of approximately $7.1 million will be available in FY 2001 for Federal assistance under this program. Applicants are hereby given notice that funds have not yet been appropriated for this program. In no event will MBDA or the Department of Commerce be responsible for proposal preparation costs if this program fails to receive funding or is canceled because of other agency priorities.

Financial assistance awards under this program may range from $155,000 to $400,375 in Federal funding per year based upon minority population, the size of the market and its need for MBDA resources. Applicants must submit project plans and budgets for three years. The annual awards must have Scopes of Work that are clearly severable and can be easily separated into annual increments of meaningful work that will produce measurable programmatic objectives. Maintaining the severability of each annual funding request is necessary to ensure the orderly management and closure of a project in the event funding is not available for the second or third year continuation of the project. Projects will be funded for no more than one year at a time. Funding for subsequent years will be at the sole discretion of the Department of Commerce (DoC) and will depend on satisfactory performance by the recipient and the availability of funds to support the continuation of the project.

Geographic Service Areas

An operator must provide services to eligible clients within its specified geographic service area. MBDA has defined the service area for each award below. To determine its geographic service areas, MBDA uses states, counties, Metropolitan Areas (MA), which comprise metropolitan statistical areas (MSA), consolidated metropolitan statistical areas (CMSA), and primary metropolitan statistical areas (PMSA) as defined by the OMB Committee on MAs (http://www.whitehouse.gov/OMB/inforeg/index.html) and other demographic boundaries as specified herein. Services to eligible clients outside of an operator's specified service area may be requested, on a case-by-case basis, through the appropriate MBDA Regional Director and granted by the Grants Officer.

1. MBDC Application: Atlanta

Geographic Service Area: Atlanta, Georgia MA.

Award Number: 04–10–20001–01.

Contingent upon the availability of Federal funds, the cost of performance for each of the three 12-month funding periods from January 1, 2001 to December 31, 2003, is estimated at $276,471. The total Federal amount is $235,000. The application must include

a minimum cost share of 15% or $41,471 in non-Federal contributions.

The minimum performance goals for the MBDC are:

Completed Work Products: 125.

Dollar Value of Transactions: $14,117,647.

Number of New Clients: 147.

Number of Client Service Hours: 2,500.

Pre-Application Conference: For the exact date, time and place, contact the Atlanta Regional Office at (404) 730–3300.

For Further Information and a copy of the application kit, contact Robert Henderson, Regional Director.

2. MBDC Application: Louisville

Geographic Service Area: Louisville, Kentucky MA.

Award Number: 04–10–20002–01.

Contingent upon the availability of Federal funds, the cost of performance for each of the three 12-month funding periods from January 1, 2001 to December 31, 2003, is estimated at $182,353. The total Federal amount is $155,000. The application must include a minimum cost share of 15% or $27,353 in non-Federal contributions.

The minimum performance goals for the MBDC are:

Completed Work Products: 106.

Dollar Value of Transactions: $12,000,000.

Number of New Clients: 125.

Number of Client Service Hours: 2,125.

Pre-Application Conference: For the exact date, time and place, contact the Atlanta Regional Office at (404) 730–3300.

For Further Information and a copy of the application kit contact Robert Henderson, Regional Director.

3. MBDC Application: Miami/Ft. Lauderdale

Geographic Service Area: Miami-Fort Lauderdale, Florida MAs.

Award Number: 04–10–20003–01.

The recipient is required to maintain a satellite office in Fort Lauderdale, to service the Fort Lauderdale MA, while maintaining the MBDC principle office in the Miami MA.

Contingent upon the availability of Federal funds, the cost of performance for each of the three 12-month funding periods from January 1, 2001 to December 31, 2003, is estimated at $398,529. The total Federal amount is $338,750. The application must include a minimum cost share of 15% or $59,779 in non-Federal contributions.

The minimum performance goals for the MBDC are:

Completed Work Products: 188.

Dollar Value of Transactions: $21,176,471.

Number of New Clients: 221.

Number of Client Service Hours: 3,750.

Pre-Application Conference: For the exact date, time and place, contact the Atlanta Regional Office at (404) 730–3300.

For Further Information and a copy of the application kit contact Robert Henderson, Regional Director.

4. MBDC Application: Puerto Rico Islandwide

Geographic Service Area: Puerto Rico ''Islandwide''.

Award Number: 04–10–20004–01.

By consolidating the MBDC under an islandwide concept, we save Federal funds while continuing to offer quality service to eligible clients in Puerto Rico. This action allows for coverage of both the metropolitan and rural areas of Puerto Rico. The principle office of the ''Islandwide'' MBDC will be located in San Juan. The largest areas of minority business concentration are in San Juan, Ponce and Mayaguez. Satellite offices will be put in place to cover the Ponce and Mayaguez areas.

Contingent upon the availability of Federal funds, the cost of performance for each of the three 12-month funding periods from January 1, 2001 to December 31, 2003, is estimated at $452,941. The total Federal amount is $385,000. The application must include a minimum cost share of 15% or $67,941 in non-Federal contributions.

The minimum performance goals for the MBDC are:

Completed Work Products: 250.

Dollar Value of Transactions: $28,235,294.

Number of New Clients: 294.

Number of Client Service Hours: 5,000.

Pre-Application Conference: For the exact date, time and place, contact the Atlanta Regional Office at (404) 730–3300.

For Further Information and a copy of the application kit, contact Robert Henderson, Regional Director.

5. MBDC Application: Raleigh/Durham/Charlotte

Geographic Service Areas: Raleigh/Durham/Charlotte, North Carolina MAs.

Award Number: 04–10–20005–01.

The recipient is required to maintain a satellite office in the Charlotte, North Carolina MA as well as maintain the MBDC principle office in the Raleigh/Durham, North Carolina MA.

Contingent upon the availability of Federal funds, the cost of performance for each of the three 12-month funding periods from January 1, 2001 to December 31, 2003, is estimated at $276,471. The total Federal amount is $235,000. The application must include a minimum cost share of 15% or $41,471 in non-Federal contributions.

The minimum performance goals for the MBDC are:

Completed Work Products: 156.

Dollar Value of Transactions: $17,647,059.

Number of New Clients: 184.

Number of Client Service Hours: 3,125.

Pre-Application Conference: For the exact date, time and place, contact the Atlanta Regional Office at (404) 730–3300.

For Further Information and a copy of the application kit, contact Robert Henderson, Regional Director.

6. MBDC Application: South Carolina Statewide

Geographic Service Area: State of South Carolina.

The recipient is required to maintain the MBDC principle office in Columbia, South Carolina MA.

Award Number: 04–10–20006–01.

Contingent upon the availability of Federal funds, the cost of performance for each of the three 12-month funding periods from January 1, 2001 to December 31, 2003, is estimated at $452,941. The total Federal amount is $385,000. The application must include a minimum cost share of 15% or $67,941 in non-Federal contributions.

The minimum performance goals for the MBDC are:

Completed Work Products: 250.

Dollar Value of Transactions: $28,235,294.

Number of New Clients: 294.

Number of Client Service Hours: 5,000.

Pre-Application Conference: For the exact date, time and place, contact the Atlanta Regional Office at (404) 730–3300.

For Further Information and a copy of the application kit, contact Robert Henderson, Regional Director.

7. MBDC Application: Chicago

Geographic Service Area: Chicago, Illinois MA.

The applicant is required to maintain the MBDC primary office centrally located in the City of Chicago.

Award Number: 05–10–20001–01.

Contingent upon the availability of Federal funds, the cost of performance for each of the three 12-month funding periods from January 1, 2001 to December 31, 2003, is estimated at $422,647. The total Federal amount is $359,250. The application must include

a minimum cost share of 15% or $63,397 in non-Federal contributions.

The minimum performance goals for the MBDC are:

Completed Work Products: 231.

Dollar Value of Transactions: $26,117,647.

Number of New Clients: 272.

Number of Client Service Hours: 4,625.

Pre-Application Conference: For the exact date, time and place, contact the Chicago Regional Office at (312) 353–0182.

For Further Information and a copy of the application kit, contact Carlos Guzman, Regional Director.

8. MBDC Application: Ohio Statewide

Geographic Service Area: State of Ohio.

Award Number: 05–10–20002–01.

The recipient is required to maintain the MBDC in the Cincinnati, Ohio MA.

Contingent upon the availability of Federal funds, the cost of performance for each of the three 12-month funding periods from January 1, 2001 to December 31, 2003, is estimated at $188,235. The total Federal amount is $160,000. The application must include a minimum cost share of 15% or $28,235 in non-Federal contributions.

The minimum performance goals for the MBDC are:

Completed Work Products: 106.

Dollar Value of Transactions: $12,000,000.

Number of New Clients: 125.

Number of Client Service Hours: 2,125.

Pre-Application Conference: For the exact date, time and place, contact the Chicago Regional Office at (312) 353–0182.

For Further Information and a copy of the application kit, contact Carlos Guzman, Regional Director.

9. MBDC Application: Corpus Christi

Geographic Service Area: Corpus Christi, Texas MA.

Award Number: 06–10–20001–01.

Contingent upon the availability of Federal funds, the cost of performance for each of the three 12-month funding periods from January 1, 2001 to December 31, 2003, is estimated at $182,353. The total Federal amount is $155,000. The application must include a minimum cost share of 15% or $27,353 in non-Federal contributions.

The minimum performance goals for the MBDC are:

Completed Work Products: 106.

Dollar Value of Transactions: $12,000,000.

Number of New Clients: 125.

Number of Client Service Hours: 2,125.

Pre-Application Conference: For the exact date, time and place, contact the Dallas Regional Office at (214) 767–8001.

For Further Information and a copy of the application kit, contact John Iglehart, Regional Director.

10. MBDC Application: Dallas

Geographic Service Area: Dallas/Ft. Worth, Texas MAs.

Award Number: 06–10–20002–01.

Contingent upon the availability of Federal funds, the cost of performance for each of the three 12-month funding periods from January 1, 2001 to December 31, 2003, is estimated at $434,706. The total Federal amount is $369,500. The application must include a minimum cost share of 15% or $65,206 in non-Federal contributions.

The minimum performance goals for the MBDC are:

Completed Work Products: 237.

Dollar Value of Transactions: $26,823,529.

Number of New Clients: 279.

Number of Client Service Hours: 4,750.

Pre-Application Conference: For the exact date, time and place, contact the Dallas Regional Office at (214) 767–8001.

For Further Information and a copy of the application kit, contact John Iglehart, Regional Director.

11. MBDC Application: Denver

Geographic Service Area: Denver, Colorado MA.

Award Number: 06–10–20003–01.

Contingent upon the availability of Federal funds, the cost of performance for each of the three 12-month funding periods from January 1, 2001 to December 31, 2003, is estimated at $204,876. The total Federal amount is $174,145. The application must include a minimum cost share of 15% or $30,731 in non-Federal contributions.

The minimum performance goals for the MBDC are:

Completed Work Products: 106.

Dollar Value of Transactions: $12,000,000.

Number of New Clients: 125.

Number of Client Service Hours: 2,125.

Pre-Application Conference: For the exact date, time and place, contact the Dallas Regional Office at (214) 767–8001.

For Further Information and a copy of the application kit, contact John Iglehart, Regional Director.

12. MBDC Application: El Paso

Geographic Service Area: El Paso, Texas MA.

Award Number: 06–10–20004–01.

Contingent upon the availability of Federal funds, the cost of performance for each of the three 12-month funding periods from January 1, 2001 to December 31, 2003, is estimated at $182,353. The total Federal amount is $155,000. The application must include a minimum cost share of 15% or $27,353 in non-Federal contributions.

The minimum performance goals for the MBDC are:

Completed Work Products: 106.

Dollar Value of Transactions: $12,000,000.

Number of New Clients: 125.

Number of Client Service Hours: 2,125.

Pre-Application Conference: For the exact date, time and place, contact the Dallas Regional Office at (214) 767–8001.

For Further Information and a copy of the application kit, contact John Iglehart, Regional Director.

13. MBDC Application: Houston

Geographic Service Area: Houston, Texas MA.

Award Number: 06–10–20005–01.

Contingent upon the availability of Federal funds, the cost of performance for each of the three 12-month funding periods from January 1, 2001 to December 31, 2003, is estimated at $471,029. The total Federal amount is $400,375. The application must include a minimum cost share of 15% or $70,654 in non-Federal contributions.

The minimum performance goals for the MBDC are:

Completed Work Products: 259.

Dollar Value of Transactions: $29,294,118.

Number of New Clients: 305.

Number of Client Service Hours: 5,188.

Pre-Application Conference: For the exact date, time and place, contact the Dallas Regional Office at (214) 767–8001.

For Further Information and a copy of the application kit, contact John Iglehart, Regional Director.

14. MBDC Application: New Mexico Statewide

Geographic Service Area: State of New Mexico.

Award Number: 06–10–20006–01.

The recipient is required to maintain the MBDC in Albuquerque, New Mexico MA.

Contingent upon the availability of Federal funds, the cost of performance for each of the three 12-month funding periods from January 1, 2001 to December 31, 2003, is estimated at $258,824. The total Federal amount is

$220,000. The application must include a minimum cost share of 15% or $38,824 in non-Federal contributions.

The minimum performance goals for the MBDC:

Completed Work Products: 144.

Dollar Value of Transactions: $16,235,294.

Number of New Clients: 169.

Number of Client Service Hours: 2,875.

Pre-Application Conference: For the exact date, time and place, contact the Dallas Regional Office at (214) 767–8001.

For Further Information and a copy of the application kit, contact John Iglehart, Regional Director.

15. MBDC Application: Oklahoma City

Geographic Service Area: Oklahoma City, Oklahoma MA.

Award Number: 06–10–20007–01.

Contingent upon the availability of Federal funds, the cost of performance for each of the three 12-month funding periods from January 1, 2001 to December 31, 2003, is estimated at $182,353. The total Federal amount is $155,000. The application must include a minimum cost share of 15% or $27,353 in non-Federal contributions.

The minimum performance goals for the MBDC are:

Completed Work Products: 106.

Dollar Value of Transactions: $12,000,000.

Number of New Clients: 125.

Number of Client Service Hours: 2,125.

Pre-Application Conference: For the exact date, time and place, contact the Dallas Regional Office at (214) 767–8001.

For Further Information and a copy of the application kit, contact John Iglehart, Regional Director.

16. MBDC Application: San Antonio

Geographic Service Area: San Antonio, Texas MA.

Award Number: 06–10–20008–01.

Contingent upon the availability of Federal funds, the cost of performance for each of the three 12-month funding periods from January 1, 2001 to December 31, 2003, is estimated at $317,647. The total Federal amount is $270,000. The application must include a minimum cost share of 15% or $47,647 in non-Federal contributions.

The minimum performance goals for the MBDC are:

Completed Work Products: 179.

Dollar Value of Transactions: $20,117,647.

Number of New Clients: 210.

Number of Client Service Hours: 3,563.

Pre-Application Conference: For the exact date, time and place, contact the Dallas Regional Office at (214) 767–8001.

For Further Information and a copy of the application kit, contact John Iglehart, Regional Director.

17. MBDC Application: Manhattan/Bronx

Geographic Service Area: The Boroughs of Manhattan and the Bronx, New York.

Award Number: 02–10–20001–01.

The recipient is required to maintain the MBDC in the Borough of Manhattan.

Contingent upon the availability of Federal funds, the cost of performance for each of the three 12-month funding periods from January 1, 2001 to December 31, 2003, is estimated at $295,294. The total Federal amount is $251,000. The application must include a minimum cost share of 15% or $44,294 in non-Federal contributions.

The minimum performance goals for the MBDC are:

Completed Work Products: 167.

Dollar Value of Transactions: $18,352,941.

Number of New Clients: 196.

Number of Client Service Hours: 3,250.

Pre-Application Conference: For the exact date, time and place, contact the New York Regional Office at (212) 264–3262.

For Further Information and a copy of the application kit, contact Heyward Davenport, Regional Director.

18. MBDC Application: New Jersey Statewide

Geographic Service Area: State of New Jersey.

Award Number: 02–10–20002–01.

The recipient is required to maintain the MBDC in the Newark, New Jersey MA.

Contingent upon the availability of Federal funds, the cost of performance for each of the three 12-month funding periods from January 1, 2001 to December 31, 2003, is estimated at $338,235. The total Federal amount is $287,500. The application must include a minimum cost share of 15% or $50,735 in non-Federal contributions.

The minimum performance goals for the MBDC are:

Completed Work Products: 188.

Dollar Value of Transactions: $21,176,471.

Number of New Clients: 221.

Number of Client Service Hours: 3,750.

Pre-Application Conference: For the exact date, time and place, contact the New York Regional Office at (212) 264–3262.

For Further Information and a copy of the application kit, contact Heyward Davenport, Regional Director.

19. MBDC Application: Philadelphia

Geographic Service Area: Philadelphia, Pennsylvania MA.

Award Number: 02–10–20003–01.

Contingent upon the availability of Federal funds, the cost of performance for each of the three 12-month funding periods from January 1, 2001 to December 31, 2003, is estimated at $276,471. The total Federal amount is $235,000. The application must include a minimum cost share of 15% or $41,471 in non-Federal contributions.

The minimum performance goals for the MBDC are:

Completed Work Products: 156.

Dollar Value of Transactions: $17,647,059.

Number of New Clients: 184.

Number of Client Service Hours: 3,125.

Pre-Application Conference: For the exact date, time and place, contact the New York Regional Office at (212) 264–3262.

For Further Information and a copy of the application kit, contact Heyward Davenport, Regional Director.

20. MBDC Application: Queens/Brooklyn

Geographic Service Area: The Boroughs of Queens and Brooklyn, New York.

Award Number: 02–10–20004–01.

The recipient is required to maintain the MBDC in the Borough of Queens.

Contingent upon the availability of Federal funds, the cost of performance for each of the three 12-month funding periods from January 1, 2001 to December 31, 2003, is estimated at $276,471. The total Federal amount is $235,000. The application must include a minimum cost share of 15% or $41,471 in non-Federal contributions.

The minimum performance goals for the MBDC are:

Completed Work Products: 156.

Dollar Value of Transactions: $17,647,059.

Number of New Clients: 184.

Number of Client Service Hours: 3,125.

Pre-Application Conference: For the exact date, time and place, contact the New York Regional Office at (212) 264–3262.

For Further Information and a copy of the application kit, contact Heyward Davenport, Regional Director.

21. MBDC Application: Williamsburg (Brooklyn)

Geographic Service Area: Williamsburg, in the Borough of Brooklyn, New York.

Award Number: 02–10–20005–01.

Contingent upon the availability of Federal funds, the cost of performance for each of the three 12-month funding periods from January 1, 2001 to December 31, 2003, is estimated at $374,412. The total Federal amount is $318,250. The application must include a minimum cost share of 15% or $56,162 in non-Federal contributions.

The minimum performance goals for the MBDC are:

Completed Work Products: 207.

Dollar Value of Transactions: $23,294,118.

Number of New Clients: 243.

Number of Client Service Hours: 4,125.

Pre-Application Conference: For the exact date, time and place, contact the New York Regional Office at (212) 264–3262.

For Further Information and a copy of the application kit contact Heyward Davenport, Regional Director.

22. MBDC Application: Alaska Statewide

Geographic Service Area: State of Alaska.

Award Number: 09–10–20001–01.

The recipient is required to maintain the MBDC in the Fairbanks, Alaska MA.

Contingent upon the availability of Federal funds, the cost of performance for each of the three 12-month funding periods from January 1, 2001 to December 31, 2003, is estimated at $182,353. The total Federal amount is $155,000. The application must include a minimum cost share of 15% or $27,353 in non-Federal contributions.

The minimum performance goals for the MBDC are:

Completed Work Products: 106.

Dollar Value of Transactions: $12,000,000.

Number of New Clients: 125.

Number of Client Service Hours: 2,125.

Pre-Application Conference: For the exact date, time and place, contact the San Francisco Regional Office at (415) 744–3001.

For Further Information and a copy of the application kit, contact Melda Cabrera, Regional Director.

23. MBDC Application: Arizona Statewide

Geographic Service Area: State of Arizona.

Award Number: 09–10–20002–01.

Contingent upon the availability of Federal funds, the cost of performance for each of the three 12-month funding periods from January 1, 2001 to December 31, 2003, is estimated at $258,824. The total Federal amount is $220,000. The application must include a minimum cost share of 15% or $38,824 in non-Federal contributions.

The minimum goals for the MBDC are:

Completed Work Products: 144.

Dollar Value of Transactions: $16,235,294.

Number of New Clients: 169.

Number of Client Service Hours: 2,875.

Pre-Application Conference: For the exact date, time and place, contact the San Francisco Regional Office at (415) 744–3001.

For Further Information and a copy of the application kit, contact Melda Cabrera, Regional Director.

24. MBDC Application: Honolulu

Geographic Service Area: Honolulu, Hawaii MA.

Award Number: 09–10–20003–01.

Contingent upon the availability of Federal funds, the cost of performance for each of the three 12-month funding periods from January 1, 2001 to December 31, 2003, is estimated at $288,235. The total Federal amount is $245,000. The application must include a minimum cost share of 15% or $43,235 in non-Federal contributions.

The minimum goals for the MBDC are:

Completed Work Products: 162.

Dollar Value of Transactions: $18,352,941.

Number of New Clients: 191.

Number of Client Service Hours: 3,250.

Pre-Application Conference: For the exact date, time and place, contact the San Francisco Regional Office at (415) 744–3001.

For Further Information and a copy of the application kit contact: Melda Cabrera, Regional Director.

25. MBDC Application: East Los Angeles County

Geographic Service Area: the boundaries of the East Los Angeles County MBDC are as follows: Boundaries on the North by the Los Angeles County and Kern County Line, boundaries on the South by the Santa Ana Freeway (5) and the Orange County Line, boundaries on the West by the Pasadena Freeway (110) and the Arroyo Parkway in the City of Pasadena, boundaries on the East by Los Angeles and San Bernardino counties.

Award Number: 09–10–20004–01.

Contingent upon the availability of Federal funds, the cost of performance for each of the three 12-month funding periods from January 1, 2001 to December 31, 2003, is estimated at $398,529. The total Federal amount is $338,750. The application must include a minimum cost share of 15% or $59,779 in non-Federal contributions.

The minimum goals for the MBDC are:

Completed Work Products: 218.

Dollar Value of Transactions: $24,705,882.

Number of New Clients: 257.

Number of Client Service Hours: 4,375.

Pre-Application Conference: For the exact date, time and place, contact the San Francisco Regional Office at (415) 744–3001.

For Further Information and a copy of the application kit contact Melda Cabrera, Regional Director.

26. MBDC Application: South Los Angeles County

Geographic Service Area: Boundaries for the South Los Angeles County MBDC are as follows: boundaries on the North by the Santa Monica Freeway (10), boundaries on the South by the Coast and the Los Angeles County and Orange County Line, boundaries on the West by the Coast, boundaries on the East by the Santa Ana Freeway (5) and the Los Angeles County Line.

Award Number: 09–10–20005–01.

Contingent upon the availability of Federal funds, the cost of performance for each of the three 12-month funding periods from January 1, 2001 to December 31, 2003, is estimated at $432,294. The total Federal amount is $367,450. The application must include a minimum cost share of 15% or $64,844 in non-Federal contributions.

The minimum goals for the MBDC are:

Completed Work Products: 236.

Dollar Value of Transactions: $26,682,353.

Number of New Clients: 278.

Number of Client Service Hours: 4,725.

Pre-Application Conference: For the exact date, time and place, contact the San Francisco Regional Office at (415) 744–3001.

For Further Information and a copy of the application contact Melda Cabrera, Regional Director.

27. MBDC Application: West Los Angeles County MBDC

Geographic Service Area: The boundaries of the West Los Angeles County MBDC are as follows: boundaries on the North by the Los

Angeles County and Kern County Line, boundaries on the South by the Santa Monica Freeway (10), boundaries on the West by the Los Angeles County and Ventura County line, boundaries on the East by the Harbor Freeway (110) and Arroyo Parkway in Pasadena City.

Award Number: 09–10–20006–01.

Contingent upon the availability of Federal funds, the cost of performance for each of the three 12-month funding periods from January 1, 2001 to December 31, 2003, is estimated at $381,647. The total Federal amount is $324,400. The application must include a minimum cost share of 15% or $57,247 in non-Federal contributions.

The minimum goals for the MBDC are:

Completed Work Products: 210.

Dollar Value of Transactions: $23,717,647.

Number of New Clients: 247.

Number of Client Service Hours: 4,200.

Pre-Application Conference: For the exact date, time and place, contact the San Francisco Regional Office at (415) 744–3001.

For Further Information and a copy of the application kit contact: Melda Cabrera, Regional Director.

Matching Requirements

Cost sharing of at least 15% is required. Cost sharing is the portion of the project cost not borne by the Federal Government. Applicants can meet this requirement in any of the following four means or a combination thereof: (1) Cash contributions, (2) non-cash applicant contributions, (3) third party in-kind contributions, and (4) client fees.

Additional cost sharing is encouraged. Client fees charged for services rendered may range from $10 to $60 per hour based on the gross receipts of the client's business ranging from $0 to $5 million and above. One way an MBDC may use to help meet its cost sharing goal is by charging fees for services rendered. If the MBDC chooses to charge fees, there are policy restrictions with which it must comply:

First, client fees charged for one-on-one assistance must be based on a rate of $100 per hour. Second, the MBDC must set fee rates based on the following chart:

Gross receipts of client	Base rate for services rendered	Percent of cost borne by client	Client fee per hour
$0–99,999	$100.00	10	$10.00
100,000–299,999	100.00	20	20.00
300,000–999,999	100.00	30	30.00
1 Million–2,999,999	100.00	40	40.00
3 Million–4,999,999	100.00	50	50.00
5 Million and Above	100.00	60	60.00

Third, the MBDC must contribute cash for uncollected fees that were included as part of the cost sharing contribution committed for this award. Fourth, client fees applied directly to the award's cost sharing requirement must be used in furtherance of the program objectives.

Type of Funding Instrument

Financial assistance awards in the form of cooperative agreements will be used to fund this program. MBDA's substantial involvement with recipients will include performing the following duties to further the MBDC's objectives:

a. *Post-Award Conferences*—MBDA shall conduct post-award conferences for all MBDC award recipients to insure that each MBDC has a clear understanding of the program and its components. The conference will: (1) Provide an MBDA Directory for MBDCs, Orient MBDC program officers; (2) Explain program reporting requirements and procedures; and (3) Identify available resources that can enhance the capabilities of the MBDC. Provide detailed information about MBDA's business and other information systems.

b. *Networking, Promotion and Information Exchange*—MBDA shall provide the following: (1) Access to business information systems, which support the work of the MBDC, as described in the Enhancing the MBDCs Through Technology section. This information will be provided by MBDA's Office of Information Technology. The specific information systems and access to them will be provided at the time of the award for a particular MBDC; (2) Sponsor one national and at least one regional conference; (3) Expand the Phoenix data bank of minority-owned firms by requiring other MBDA-funded programs to provide additional entries; (4) Promote the exchange of business opportunity information within the MBDA funded system using the Phoenix and Opportunity databases located at *www.mbda.gov;* (5) Work closely with the MBDC to establish a system in which procurement and contract opportunities can be shared with the network of MBDCs. This system will include opportunities identified throughout the MBDA network using the Phoenix and Opportunity databases located at *www.mbda.gov;* (6) Help promote special events to be scheduled at the local community, state and national levels in celebration of MED Week, which occurs annually; and (7) Identify Federal, state and local governments, and private sector market opportunities to the MBDCs using the Phoenix and Opportunity databases located at *www.mbda.gov.*

c. *Project Monitoring*—MBDA will systematically monitor the performance of the MBDC. This monitoring includes regular review of data input to the performance database system, assessment of the end of the second quarter progress report, and an on-site review, when deemed necessary and appropriate by the regional office, of the center's client files to verify MBDC performance, reported assistance and interviews with clients assisted. In consultation with clients of the individual MBDC, MBDA will assess the Center's effectiveness in providing business development services to their respective minority business communities. MBDA will then provide a report of findings and recommendations for improvement as a result of evaluations and monitoring visits. MBDA will approve qualifications of key MBDC staff and respond in a timely manner to correspondence requesting MBDA action.

Eligibility Criteria

For-profit and non-profit organizations (including sole-proprietorships), state and local government entities, American Indian Tribes, and educational institutions are eligible to operate MBDCs.

Award Period

The total award period is three (3) years. Funding will be provided

annually at the discretion of MBDA and DoC, and will depend upon satisfactory performance by the recipient and availability of funds to continue the project. Project proposals accepted for funding will not compete for funding in subsequent funding periods within the approved award period. Publication of this notice does not obligate MBDA or DoC to award any specific cooperative agreement or to obligate all or any part of available funds.

Indirect Costs

The total dollar amount of the indirect costs proposed in an application under this program must not exceed the indirect cost rate negotiated and approved by a cognizant Federal agency prior to the proposed effective date of the award or 100 percent of the total proposed direct costs dollar amount in the application, whichever is less.

Application Forms and Package

Standard Forms 424, Application for Federal Assistance; 424A, Budget Information-Non-Construction Programs; and 424B, Assurances-Non-Construction Programs, SF–LLL (Rev. 7–97); Department of Commerce forms, CD–346, Applicant for Funding Assistance, CD–511, Certifications Regarding Debarment, Suspension and Other Responsibility matters: Drug-Free Workplace Requirements and Lobbying, CD–512, Certifications Regarding Debarment, Suspension, Ineligibility and Voluntary Exclusion-Lower Tier Covered Transactions and Lobbying shall be used in applying for financial assistance. These forms may be obtained by (1) contacting MBDA as described in the ''CONTACT'' section above; (2) by downloading Standard forms at *http://www.whitehouse.gov/OMB/grants/index;* (3) and Department of Commerce forms may be downloaded at *www.doc.gov/forms,* or (4) by applying on-line via the World Wide Web at MBDA's web site located at *www.mbda.gov/e-grants.*

Proposal Format

The structure of the proposal should contain the following headings, in the following order:

I. Table of Contents
II. Program Narrative
  1. Applicant Capability
  2. Resources
  3. Techniques and Methodologies
  4. Costs
III. Forms
  Pages of the proposal should be numbered consecutively.

Project Funding Priorities

MBDA is especially interested in receiving innovative proposals that focus on the following: (1) Identifying and working to eliminate barriers which limit the access of minority businesses to markets and capital; (2) identifying and working to meet the special needs of minority businesses seeking to obtain large-scale contracts (in excess of $500,000) with institutional customers; and (3) promoting the understanding and use of Electronic Commerce by the minority business community.

Evaluation Criteria

Proposals will be evaluated and applicants will be selected based on the following criteria.

1. Applicant Capability (45 points)

The applicant's proposal will be evaluated with respect to the applicant firm's experience and expertise in providing the work requirements listed. Specifically, the proposals will be evaluated as follows:

- Experience in and knowledge of the minority business sector and strategies for enhancing its growth and profitability (10 points);
- Resources and professional relationships within the corporate, banking and investment community that may be beneficial to minority-owned firms (10 points);
- Experience and expertise in advocating on behalf of minority businesses, both as to specific transactions in which a minority business seeks to engage, and as to broad market advocacy for the benefit of the minority community at large (10 points); and
- Assessment of the qualifications, experience and proposed role of staff who will operate the project, including possessing the expertise in utilizing information systems as contemplated under the Computer Requirements section of this Notice (15 points).

Qualifications of the project director of the MBDC are of particular importance and must be included as part of the application, along with an original college transcript, as appropriate. Position descriptions and qualification standards for all staff should be included as part of the application. Applicants must provide a copy of their Articles of Incorporation, by-laws and IRS 501(c)(3) non-profit letter or other evidence of non-profit status.

2. Resources (25 points)

The applicant's proposal will be evaluated according to the following sub-criteria:

- Discuss how you plan to recruit, establish and maintain the network of 15 Strategic Partners (10 points).
- Discuss how you plan to accomplish the computer hardware and software requirements (5 points).
- Discuss those resources (not included as part of the cost-sharing arrangement) that will be used. Include commitment letters from those resources listed and indicate their willingness to work with the applicant. These resources can include such items as computer facilities, voluntary staff time and space, and financial resources. Three to five letters of support (with telephone numbers) from business or community organizations should be included from those resources willing to work with the applicant (10 points).

3. Techniques and Methodologies (20 points)

The applicant's proposal will be evaluated with respect to the proposed action plans and operation techniques. Specifically, the proposals will be evaluated as follows:

- The applicant's specific plan-of-action detailing *how* each work requirement, except for Strategic Partners which is addressed under Resources, will be met and *how* the techniques to be used will be implemented. The applicant will be evaluated on how effectively and efficiently all staff time will be used to achieve the work requirements (10 points).
- Discuss each performance measure by relating each one to the financial, information and market resources available in the geographic service area to the applicant and how the goals will be met (10 points).

4. Proposed Budget and Supporting Budget Narrative (10 points)

The applicant's proposal will be evaluated on the following sub-criteria:

- Reasonableness, allowability and allocability of costs (5 points).
- Proposed cost sharing of 15% is required. The non-Federal share must be adequately documented (5 points).
- Cost sharing which exceeds 15% will be awarded bonus points on the following scale: 16–20%—1 point; 21–25%—2 points; 26–30%—3 points; 31–35%—4 points; and over 36%—5 points.

An application must receive an average of at least 70% of the total points available for all four evaluation criteria in order for the application to be considered for funding.

Indirect Costs: The indirect cost policies contained in OMB Circulars A–21, A–87 and A–122 will apply to MBDA awards for its business development programs. Indirect costs are those costs proposed for *common* or

joint objectives and which cannot be readily identified with a particular cost objective. Therefore, if the MBDA award is to be the sole source of support for the applicant organization, all costs are direct costs and no indirect costs should be proposed.

Organizations with indirect costs that do not have an established indirect cost rate negotiated and approved by a cognizant Federal agency may still propose indirect costs. For the recipient to recover indirect costs, however, the proposed budget must include a line item for such costs. Also, the recipient must prepare and submit a cost allocation plan and indirect cost rate proposal as required by applicable OMB circulars (A–21, A–87 and A–122). The allocation plan and the rate proposal must be submitted to the Department's Office of Inspector General (OIG) for review and approval within 90 days from the effective date of the proposed award.

Audit Costs: Audits shall be performed in accordance with audit requirements contained in Office of Management and Budget Circular A–133, Audits of States, Local Governments, and Non-Profit Organizations, revised June 30, 1997. OMB Circular A–133 requires that non-profit organizations, government agencies, Indian tribes and educational institutions expending $300,000 or more in federal funds during a one-year period conduct a single audit in accordance with guidelines outlined in the circular. Applicants are reminded that the Office of Inspector General may conduct other audits.

Management Fee: For-profit as well as not-for-profit organizations may negotiate their management fees, but they shall not exceed 7% of total estimated direct costs (Federal plus non-Federal) for the proposed award.

Program Income: Many of MBDA's business development services programs allow their awardees to charge a fee for services rendered to clients. Where applicable, fees are considered program income and shall be accounted for and may be used to finance the non-Federal cost-share of the project. Any excess fee income shall be used to further the program purpose in accordance with the terms and conditions of the award.

Selection Procedures

Prior to the formal paneling process, each application will receive an initial screening to ensure that all required forms, signatures and documentation are present. Each application will receive an independent, objective review by a panel qualified to evaluate the applications submitted. The review panel will be made up of at least three independent reviewers who will review all applications based on the above criteria. The review panel will evaluate and rank the proposals.

The Director of MBDA makes the final recommendation to the Department of Commerce Grants Officer regarding the funding of applications, taking into account the following selection criteria:

1. The evaluations and rankings of the independent review panel;
2. The degree to which applications address MBDA priorities as established under the project funding priorities;
3. The availability of funding.

Unsuccessful Competition

On occasion, competitive solicitations or competitive panels may produce less than optimum results, such as competition resulting in the receipt of no applications or competition resulting in all unresponsive applications received. If the competition results in the receipt of only one application, it may or may not require additional action from MBDA depending upon the competitive history of the area, the quality of the application received, and the time and cost limits involved. In the event that any or all of these conditions arise, MBDA shall take the most time and cost-effective approach available that is in the best interest of the Government. This includes, but is not limited to: (1) Re-competition or (2) Re-Paneling or (3) Negotiation.

Other Requirements

1. *Purchase of American-Made Equipment and Products:* Applicants are hereby notified that they are encouraged, to the greatest extent practicable, to purchase American-made equipment and products with funding provided under this program.

2. *Paperwork Reduction Act:* This Notice involves collections of information subject to the Paperwork Reduction Act, which have been approved by OMB under OMB control numbers 0348–0043, 0348–0044, 0348–0040, and 0348–0046. Notwithstanding any other provision of law, no person is required to respond to nor shall a person be subject to a penalty for failure to comply with a collection of information subject to the requirements of the Paperwork Reduction Act unless that collection of information displays a current valid OMB control number.

3. *Federal Policies and Procedures:* Recipients and subrecipients are subject to all Federal laws and Federal and DoC policies, regulations, and procedures applicable to Federal financial assistance awards.

4. *Past Performance:* Unsatisfactory performance under prior Federal awards may result in an application not being considered for funding.

5. *Preaward Activities:* If applicants incur any costs prior to an award being made, they do so solely at their own risk of not being reimbursed by the Government. Notwithstanding any verbal or written assurance that may have been received, there is no obligation on the part of DoC to cover pre-award costs.

6. *No Obligation for Future Funding:* If an applicant is selected for funding, DoC has no obligation to provide any additional future funding in connection with that award. Renewal of an award to increase funding or extend the period of performance is at the total discretion of DoC.

7. *Delinquent Federal Debts:* No award of Federal funds shall be made to an applicant who has an outstanding delinquent Federal debt until either (i) Delinquent account is paid in full, (ii) A negotiated repayment schedule is established and at least one payment is received, or (iii) Other arrangements satisfactory to DoC are made.

8. *Name Check Review:* All non-profit and for-profit applicants are subject to a name check review process. Name checks are intended to reveal if any key individuals associated with the applicant have been convicted of or are presently facing criminal charges such as fraud, theft, perjury or other matters which significantly reflect on the applicant's management honesty or financial integrity.

9. *Primary Applicant Certifications:* All primary applicants must submit a completed Form CD–511, ''Certifications Regarding Debarment, Suspension and Other Responsibility Matters; Drug-Free Workplace Requirements and Lobbying,'' and the following explanations are hereby provided:

(i). *Nonprocurement Debarment and Suspension:* Prospective participants (as defined at 15 CFR Part 26, Section 105) are subject to 15 CFR Part 26, ''Nonprocurement Debarment and Suspension'' and the related section of the certification form prescribed above applies;

(ii). *Drug-Free Workplace:* Grantees (as defined at 15 CFR Part 26, Section 605) are subject to 15 CFR Part 26, Subpart F, ''Governmentwide Requirements for Drug-Free Workplace (Grants)'' and the related section of the certification form prescribed above applies;

(iii) *Anti-Lobbying:* Persons (as defined at 15 CFR Part 28, Section 105) are subject to the lobbying provisions of

31 U.S.C. 1352, ''Limitation on use of appropriated funds to influence certain Federal contracting and financial transactions,'' and the lobbying section of the certification form prescribed above applies to applicants/bids for grants, cooperative agreements, and contracts for more than $100,000, and loans and loan guarantees for more than $150,000, or the single family maximum mortgage limit for affected programs, whichever is greater; and

(iv) *Anti-Lobbying Disclosures:* Any applicant that has paid or will pay for lobbying using any funds must submit an SF–LLL, ''Disclosure of Lobbying Activities,'' as required under 15 CFR Part 28, Appendix B.

10. *Lower Tier Certifications:* Recipients shall require applications/bidders for subgrants, contracts, subcontracts, or other lower tier covered transactions at any tier under the award to submit, if applicable, a completed Form CD–512, ''Certifications Regarding Debarment, Suspension, Ineligibility and Voluntary Exclusion-Lower Tier Covered Transactions and Lobbying'' and disclosure form, SF–LLL, ''Disclosure of Lobbying Activities.'' Form CD–512 is intended for the use of recipients and should not be transmitted to DoC. SF–LLL submitted by any tier recipient or subrecipient should be submitted to DoC in accordance with the instructions contained in the award document.

11. *False Statements:* A false statement on an application for Federal financial assistance is grounds for denial or termination of funds, and grounds for possible punishment by a fine or imprisonment as provided in 18 U.S.C. 1001.

12. *Intergovernmental Review:* Applications under this program are not subject to Executive Order 12372, ''Intergovernmental Review of Federal Programs.''

13. *Executive Order 12866:* This Notice was determined to be not significant for purposes of Executive Order 12866.

Dated: August 14, 2000.

Courtland Cox,

Director, Minority Business Development Agency.

Juanita E. Berry,

Federal Register Liaison Officer, Minority Business Development Agency.

[FR Doc. 00–21858 Filed 8–25–00; 8:45 am]

BILLING CODE 3510–21–P

DEPARTMENT OF COMMERCE

Minority Business Development Agency

[Docket No. 000724218–0217–01]

RIN: 0640–ZA09

Solicitation of Applications for the Native American Business Development Center (NABDC) Program

AGENCY: Minority Business Development Agency, Commerce.

ACTION: Notice.

SUMMARY: In accordance with Executive Order 11625 and 15 U.S.C. 1512, the Minority Business Development Agency (MBDA) is soliciting competitive applications from organizations to operate new and enhanced Native American Business Development Centers (NABDC) under its Native American Business Development Center Program. The new and enhanced NABDC Program is the successor to MBDA's Native American Business Development Center (NABDC) Program, for providing general business assistance to Native American-owned companies in various markets throughout the United States. In order for their proposals to receive consideration, applicants must comply with all information and requirements contained in this Notice.

The NABDC Program represents a significant programmatic and administrative enhancement of MBDA's traditional NABDC Program. In operation since 1982, the NABDCs provide generalized management and technical assistance and business development services to Native American business enterprises within their designated geographic service areas. The new and enhanced NABDC program described in this Notice updates the traditional NABDC model by leveraging the full benefit of telecommunications technology, including the Internet, and a variety of online computer resources to dramatically increase the level of service which the NABDCs can provide to their Native American business clients.

In addition, the NABDC Program guidelines further increase the impact of the NABDC projects by requiring that project operators not only deploy their business assistance services to the Native American business public directly, but that they also develop a network of strategic partnerships with third-party organizations located within the geographic service area. These strategic partnerships will be used to expand the reach of the NABDC project into communities and market segments that the project would have limited resources to cover otherwise, and are a key component of this program modification.

Individuals eligible for assistance under the NABDC Program are Native Americans, African Americans, Puerto Ricans, Spanish-speaking Americans, Aleuts, Asian Pacific Americans, Asian Indians, Eskimos and Hasidic Jews. References throughout this Notice to providing assistance to Native Americans also include eligible non-Native Americans listed in the preceding sentence. No service will be denied to any member of the eligible groups listed above.

DATES: The closing date for applications for each NABDC project is September 29, 2000. Anticipated time for processing of applications is 120 days. MBDA anticipates that awards for the NABDC program will be made with a start date of January 1, 2001. Completed applications for the NABDC program must be (1) mailed (USPS postmark) to the address below; or (2) received by MBDA no later than 5:00 p.m. Eastern Daylight Time. Applications postmarked later than the closing date or received after the closing date and time will not be considered.

ADDRESSES: Applicants must submit one signed original plus two (2) copies of the application. Completed application packages must be submitted to: Native American Business Development Center Program Office, Office of Executive Secretariat, HCHB, Room 5600, Minority Business Development Agency, U.S. Department of Commerce, 14th Street and Constitution Avenue, NW, Washington, DC 20230.

If the application is hand-delivered by the applicant or its representative, the application must be delivered to Room 1874, which is located at Entrance #10, 15th Street, NW, between Pennsylvania and Constitution Avenues. Applicants are encouraged to submit their proposal electronically via the World Wide Web. However, the following paper forms must be submitted with original signatures in conjunction with any electronic submissions by the closing date and time stated above: (1) SF–424, Application for Federal Assistance; (2) the SF–424B, Assurances-Non-Construction Programs; (3) the SF–LLL (Rev. 7–97) (if applicable), Disclosure of Lobbying Activities; (4) Department of Commerce Form CD–346 (if applicable), Applicant for Funding Assistance; and (5) the CD–511, Certifications Regarding Debarment, Suspension and Other Responsibility Matters; Drug-Free

Workplace Requirements and Lobbying. MBDA's web site address to submit an application on-line is www.mbda.gov/e-grants. All required forms are located at this web address.

Failure to submit a signed, original SF–424 with the application, or separately in conjunction with submitting a proposal electronically, by the deadline will result in the application being rejected and returned to the applicant. Failure to sign and submit with the application, or separately in conjunction with submitting a proposal electronically, the other forms identified above by the deadline will automatically cause an application to lose two (2) points. Failure to submit other documents or information may adversely affect an applicant's overall score. MBDA shall not accept any changes, additions, revisions or deletions to competitive applications after the closing date for receiving applications, except through a formal negotiation process.

FOR FURTHER INFORMATION CONTACT: For further information, contact the MBDA Regional Office for the geographic service area in which the project will be located.

Pre-Application Conference: A pre-application conference will be held for each NABDC project solicitation. Contact the MBDA Regional Office for the geographic service area in which the project will be located to receive further information. Proper identification is required for entrance into any Federal building.

SUPPLEMENTARY INFORMATION: Following are the geographic service areas for which applications are being solicited: North Carolina Cherokee/Ashville, Minnesota Statewide, New Mexico Statewide, North/South Dakota Statewide, Oklahoma Statewide, California Statewide, Arizona Statewide, Northwest (Washington, Oregon, and Idaho).

Authority: Executive Order 11625 and 15 U.S.C. 1512.

Catalog of Federal Domestic Assistance (CFDA): 11.801 Native American Business Development Center Program.

Program Description

For the past 18 years, MBDA has operated the NABDC Program as its approach for providing general business assistance and counseling to Native American business enterprises. MBDA established NABDCs in numerous cities throughout the country to assist in the development of local Native American firms. The NABDC Program was developed to address the needs of the majority of Native American-owned firms throughout the country at a basic level, and thus the traditional NABDCs are not designed to provide specialized expertise in any specific industry.

Through its new and enhanced NABDC Program, MBDA is now providing major enhancements to the traditional NABDC Program, by leveraging the full benefit of telecommunications technology, including the Internet, and a variety of online computer-based resources to dramatically increase the level of service, which the new Centers can provide to their clients.

This enhanced approach also increases the reach of the Centers by requiring project operators to develop strategic alliances with public and private sector partners, as a means of reaching out to Native American firms within the project's geographic service area.

Background

Under the original NABDC Program, MBDA traditionally operated as many as 10 Centers in strategic locations throughout the country, for the benefit of Native American entrepreneurs. MBDA selected locations for the establishment of these Centers based on the size of the population in those markets, and the number of Native American-owned companies, as established by U.S. Census Bureau data. While this approach to site selection continues under the new NABDC Program, MBDA will award a fewer number of projects in total, in light of the performance benefits the Program stands to gain from the increased use of technology and strategic partnering.

In addition, like the original NABDC Program, the new and enhanced NABDC Program will be a mainstay of MBDA's overall business development efforts. The new and enhanced NABDC Program is at the core of the Agency's comprehensive strategy for addressing the needs of growing Native American firms. Under this strategy, MBDA has identified the following four types of services which an NABDC will generally be expected to provide:

1. *Access to Markets*—This involves assisting MBEs to identify and exploit opportunities for increased sales and revenue. Activities include conducting market analysis, identifying sales leads, bid preparation assistance, creating market promotions, and assistance in developing joint ventures and strategic alliances.

2. *Access to Capital*—This involves assisting MBEs to secure the financial capital necessary to start-up, and thereafter to fuel growth and expansion of their businesses. Undercapitalization has been a major contributor to the failure of business ventures in the Native American community over the years. Hence the goal of this activity is to help Native American entrepreneurs obtain the amount of financing appropriate to the scope of the proposed business and, thereby, to help ensure the greatest likelihood of success for the Native American venture in the marketplace.

3. *Management and Technical Assistance*—This component of MBDA's approach involves assisting Native American firms in establishing, improving and/or successfully maintaining their business and/or to resolve key operational issues within the business. Such issues might include the need for a recruitment and hiring strategy, evaluating a capital equipment purchase, or developing internal operating procedures.

4. *Education and Training*—This involves providing basic education and training to Native American entrepreneurs on important business topics. Training should be hands-on, practical, and streamlined in order to reflect the time constraints of the typical small business owner. In addition, given the proliferation of online resources from MBDA as well as others, this training should be designed to educate MBEs in the use of the Agency's electronic business assistance tools and in the use of electronic commerce generally to better access suppliers, customers and information.

Like the original NABDCs, the new and enhanced NABDCs will operate through the use of trained professional business counselors who will assist Native American entrepreneurs through direct client engagements. To date, MBDA has served more than 20,000 Native American businesses through its Centers, enabling these companies to grow and expand, creating new jobs, increasing tax revenues, and contributing to the health of the overall economy.

Enhancing the NABDCs Through Technology

Over the past three years, MBDA has developed a variety of new technology tools designed to leverage the benefits of information technology to assist the Native American business community. In addition, the Agency has developed a high-speed network strategy capable of linking all of its Centers into a single virtual organization. The goal of MBDA's new and enhanced NABDC Program strategy is to deploy these technology enhancements to all of the NABDCs, and create a state-of-the-art

environment for bringing Native American businesses continuously-updated information, access to resources anywhere in the country, and the best available assistance in any given subject area at any time. The implementation of this strategy is the Minority Business Internet Portal (MBIP).

MBDA's technology tools that will be made available to the NABDCs through MBDA's MBIP site include:

• *Phoenix/Opportunity*—an electronic bid-matching system that alerts participating minority companies of contract and teaming opportunities directly via e-mail. Procurement leads are transmitted to minority firms on a targeted basis according to the company's industry classification and geographic market. Firms seeking to participate in this program need only to transmit their company profile to MBDA online via the Agency's Phoenix database.

• *Resource Locator*—a new and unique software application that allows Native American business enterprises to search for business resources and locate them on a map—interactively on the Internet. Resource Locator can help Native American firms identify trade associations representing their industries, government licensing and permit offices, management and technical assistance providers, and a host of other resources quickly and efficiently, through GIS technology.

• *Online Commercial Loan Identifier*—an Internet-based tool that allows Native American enterprises to shop for commercial loans online, and identify the best available financing terms. The Commercial Loan Identifier is designed to give Native American firms the benefit of a nationwide market for commercial loan products.

• *Business and Market Planning Software*—software packages to streamline and enhance the development of business plans, marketing plans and other strategic business documents.

The MBIP will serve as a very effective vehicle for enhancing the scope and service capability of the NABDC network. Through the portal site, each NABDC will receive a standardized electronic toolkit of business development tools and applications. This ''electronic toolkit'' will provide important programmatic benefits for the NABDCs.

Specifically:

• These electronic tools will help to streamline the process of delivering client assistance to Native American business enterprises, giving the Centers the ability to service greater numbers of clients with existing resources.

• In addition, MBDA expects that these electronic tools will be in high demand because of the significant added value that they are able to create for business enterprises. Demand for these tools will further enhance the position of the NABDCs as important resources within their local markets.

• Finally, by participating in MBDA's nationwide high-speed network, each NABDC will be able to access the latest information regarding best practices, emerging market trends, success strategies, and other activities in the Native American business development arena.

Current trends in technology, procurement streamlining, globalization, and a host of other market factors have had a dramatic impact on the Native American business community. Native American-owned businesses, regardless of their industry, now find themselves subject to rapidly changing market conditions. To ensure their continued growth, these firms will need access to the best available information and expertise on a continuously updated basis. The new NABDC Program, combined with the MBIP site, directly respond to this need, by leveraging MBDA's traditional business development infrastructure through state-of-the-art technology and communications.

Work Requirements

The work requirements specify the duties and responsibilities of each recipient operating an NABDC.

Although it is not necessary for the applicant to have an office in the geographic service area, the NABDC office must be strategically located in the geographic service area to ensure that it is close to the available public and private sector resources, within a reasonable commuting distance to the minority business community, and accessible to public transportation. The NABDC must be opened and be fully operational within 30 days after receipt of the award. Fully operational means that all staff are hired, all signs are up, all items of furniture and equipment are in place and operational, and the NABDC's doors have been fully opened to the public for service.

An NABDC operator must provide services to all eligible clients within its specified geographic service area. In addition, each operator must contribute its efforts to help support MBDA's online business assistance network as established by Agency policies.

NABDCs are required to perform work in four basic areas:

1. Market Building

To identify, develop and leverage public and private sector resources and business opportunities for their clients;

(a) *Market Research and Development* which systematically investigates the service area market to see what business and capital opportunities exist for Native American business enterprise (MBE) development; search for sources of capital, sales opportunities, business buy-outs and new start possibilities; bring the research to a practical level of utility to fit the capability and needs of specific MBE client firms of the area. As market research is conducted, the NABDC will make optimum use of the MBDA network to ensure that the information is made available to fellow operators, and to MBEs throughout the country.

(b) *Market Promotion* which promotes Native American business development in the local business community by obtaining support from the community, as a whole for the utilization of Native American-owned business, is in the best interests of the local market.

The NABDC will promote individual firms to the public and private sectors to make the market aware of the capability, talent and capacity of the local MBE firms. The NABDC may utilize public service announcements and paid advertising. The NABDC promotes MBEs at local Chambers of Commerce, business and trade associations, corporate and company trade fairs and meetings, state and local government agency purchasing departments, economic development and planning offices and MBE development events. In addition, the NABDC shall promote and participate in MED Week activities involving the full participation of the private and public sectors. MED Week is a major annual event of MBDA on both the local and national levels.

Under this function, the NABDC shall carry out a plan-of-action that may include, but is not limited to, the following actions: (1) Publicize the NABDC and its services throughout the geographic service area; (2) Organize press briefings or distribute press releases for area newspapers; (3) Deliver speeches before key Native American audiences in the NABDC service area; (4) Secure a list of service area Native American vendors who are listed in MBDA's Phoenix System and use them in market promotion activities; (5) Interface with Native American Chambers of Commerce and trade associations for access to their mailing lists; (6) Communicate with bankers and other officers of financial institutions for

possible referrals of Native American entrepreneurs as existing prospective Native American clients to the NABDC; (7) Identify existing lists of successful Native American managers, professionals, technical experts and skilled crafts-people, who may have an interest in or exhibit qualifications for business ownership; (8) Develop an NABDC brochure for mail-out and distribution to the public, as well as for inclusion on the MBDA web site; and (9) E-mail information and/or newsletters to existing and prospective local Native American entrepreneurs.

c. *Resource and Inventory Development* which identifies local opportunities and resources as well as local Native American businesses, qualified to take advantage of them. This requirement will enable the NABDC to support the maintenance of content for the Phoenix/Opportunity databases and other online systems as well as to track local market trends and market demand for goods and services. Under this function, the NABDC must (1) Develop and maintain inventories of area opportunities and resources, which should include: *Electronic Commerce*—information technology affecting the marketability of its clients, i.e., access to new markets, access to capital and business opportunities and other resources; *Market Opportunities*—both in the public sector (Federal, state and local) and in the private sector (foreign and domestic); *Capital Opportunities*—e.g., loans, bonds, trade credits, and equity investments; *Business Ownership Opportunities*—e.g., franchises, licensing arrangements, mergers and buy-outs; *Education and Training Opportunities*—e.g., educational institution programs and other training resources; (2) Register eligible local Native American firms in MBDA's Phoenix database, which is a national inventory of Native American vendor firms capable of selling their goods and services to the public and private sector.

(d) *Match Opportunities and Close Transactions* which matches eligible Native American entrepreneurs with specific viable businesses, market and/or capital opportunities. This function contributes to an NABDC's financial packaging and/or procurement performance goals, and is the *only* market development function outside of the standard client business assistance in which a portion of an NABDC's time can be directly associated to *individual* Native American business clients and resource customers. This client specific time, no matter how small, is considered client assistance and may be subject to client fees. Under this function, the NABDC shall match qualified Native American entrepreneurs with identified opportunities and resources by: (1) Accessing vendor information systems, including the Phoenix/Opportunity databases; (2) Maintaining a constant awareness of the Native American firms that operate within the geographic service area and their capabilities; (3) Maintaining direct contact with purchasing executives, government procurement officials, banking officials and others so that representatives of the NABDC are in a position to learn about available business opportunities, both formally and informally; (4) Engaging in relationship brokering between purchasing organization and individual Native American firms capable of fulfilling their requirements; and (5) Assisting in direct negotiations between purchasing organization and individual Native American firms, in appropriate cases, in order to help resolve issues, serve as an advocate for the Native American firm, or otherwise assist in bringing the transaction to closure.

2. Client Services

To provide direct client assistance to Native American business enterprise on the basis of individualized professional engagements. Under these duties, the NABDC shall assist Native American firms and individuals, which have agreed in writing to become clients, in establishing, improving and/or successfully maintaining their businesses. All new clients shall be entered into the Performance database and registered in the Phoenix System. It is required that clients and their service hours should be entered in the Performance database on a regular basis, preferably weekly.

This assistance is defined as the function by which the NABDC provides direct services to its clients. It may range from general counseling to the identification, analysis and resolution of specific business problems. Clients assisted more than once during the funding period may only be counted once in that funding period. Group sessions are one method an NABDC can use to provide business development services to Native American clients. This function may be subject to client fees and directly contributes to an NABDC's performance goals.

Under this function, the NABDC shall provide assistance to eligible Native American firms and individuals (as referenced in Executive Orders 11625 and 12432) seeking assistance from the NABDC, including 8(a) certified and graduate firms. However, the NABDC shall not perform or engage in the operation of a firm. Client services include, but are not limited to, the following types of assistance: (1) *Marketing*, e.g., market research, promotion, advertising and sales, sales forecasting, market feasibility studies, pricing, procurement assistance, product and customer service, brochure design (excludes mass printing), and general counseling; (2) *Finance and Accounting*, e.g., capital budgeting, general accounting, break-even analysis, cost accounting, financial planning and analysis budgeting, tax planning, financial packaging, general counseling, and mergers and acquisitions (excludes bookkeeping, tax preparation, and audits); (3) *Manufacturing*, e.g., plant location and site selection, plant management, materials handling and distribution, total quality management, metrication for world market, and general counseling; (4) *Construction and Assistance*, e.g., estimating, bid preparation, bonding, take-offs, and general counseling; (5) *International Trade Assistance*, e.g., exporting, importing, letters of credit, bank draft, dealerships, agencies, distributorship, exporting trading companies, joint ventures, general counseling, and freight forwarding and handling; (6) *Administration*, e.g., office management, procedures and systems, inventory control, purchasing, total quality management, awareness of metric system, and general counseling; (7) *Personnel*, e.g., human resource management, job evaluation and rating system, training, and general counseling; (8) *General Management*, e.g., organization and structure, formulating corporate policy, feasibility studies, reports and controls, public relations, staff scheduling, legal services (excludes litigation), business planning, organizational development, bid preparation, and general counseling.

In order to stay competitive in the increasingly global economy, Native American business owners should consider ISO 9000 or other quality assurance standards. The NABDC must have knowledge of what these standards are, how to properly implement the standards, and how to obtain ISO 9000 Quality System certification for its clients.

The one-on-one assistance to any client shall be limited to no more than 250 hours per funding period unless prior approval is requested from the appropriate MBDA Regional Director, and approved by the Grants Officer of the Department of Commerce.

3. Operational Quality

To maintain the efficiency and effectiveness of its overall operations as well as the quality of its client services.

These duties are the means by which an NABDC maintains the efficiency and effectiveness of its overall operations as well as the quality of its client services. The function directly contributes to an NABDC's overall qualitative evaluation and rating as well as the successful completion of all work requirements. Under this function, the NABDC shall: (1) Execute signed work plan agreements and engagement letters with clients; (2) Formally describe the methodology that will be used in achieving the work plan objectives for each client; (3) Input progress/results to the performance database in a timely manner. (4) Establish procedures for collecting and accounting for all fees charged to clients; (5) Maintain records/files for all work charged to the program and clients; (6) Obtain *written* acceptance and verification (with client signatures) of services provided to its clients. For services reported, documentation must be in the NABDC's client files within 30 days after the end of every quarter in which a client receives services; (7) Comply with all reporting requirements provided upon award; (8) Cooperate with MBDA in maintaining content for the Phoenix/Opportunity databases, Resource Locator, and other online tools located at *www.mbda.gov*; and (9) Promote and utilize the services and resources of other MBDA programs, sponsored efforts and/or voluntary activities. The NABDC shall identify MBDA as the funding sponsor by providing signs worded as follows:

(geographic area) _____

Native American Business Development Center™

Operated by _____

Funded By: Minority Business Development Agency (MBDA), U.S. Department of Commerce

These signs should be highly visible to the NABDC clients and general public. They should be prominently displayed on entrances and doors. Include the name of MBDA on all stationery, letterhead, brochures, etc. The NABDC is *not* authorized to use either the Department's official seal or the MBDA logo in any of its publications, documents or materials without specific written approval from the U.S. Department of Commerce. Identify the NABDC immediately when answering the telephone. If the recipient also requires that its organization's name be given, it should be provided only *after* the NABDC has been verbally identified to a caller. Refer to MBDA in all advocacy and outreach efforts such as speaking engagements, news conferences, etc.

The term *Native American Business Development Center (NABDC)* is a trademark of the Federal Government, and the Government reserves exclusive rights in the term. Permission to use the term is granted to the award recipient for the sole purpose of representing the activities of the award recipient in the fulfillment of the terms of the financial assistance award. The Minority Business Development Agency reserves the right to control the quality of the use of the term by the award recipient. Whenever possible, for example in promotional literature and stationery, use the ™ designation as in *Native American Business Development Center*™.

4. Developing and Maintaining a Network of Strategic Partners

The work requirements for an award recipient under the NABDC Program include the development of a network of 3 alliances between the NABDC and key strategic partners selected by the recipient. The NABDC is required to establish the network of 3 Strategic Partners within 120 days after the award. The NABDC is required to maintain these alliances throughout the duration of the award. The NABDC must replace a Strategic Partner within 45 days after termination of a previously established alliance. The Strategic Partners shall be public or private sector organizations located within the project's geographic service area that are positioned to assist the project to achieve its goals for assisting the minority business community established under the terms of the award. Strategic Partners may include:

- Minority Business Enterprise (MBE) programs operated by state, county or city governments;
- Chambers of Commerce or trade associations focused on the needs of the Native American business community;
- Small Business Development Centers, or other college and university entrepreneurial development programs;
- Community Development Corporations (CDCs);
- Banks and financial institutions; and
- Faith organizations having economic development components, whose activities are *not* used for purposes the essential thrust of which is sectarian.

Each Strategic Partner shall be evidenced by a written Memorandum of Understanding (MOU) that expressly sets forth the conditions under which the partners agree to operate. Specifically, the Strategic Partners must agree to serve as a local resource for Native American-owned businesses seeking to obtain NABDC services. The Strategic Partner must at a minimum:

- Provide effective guidance to Native American entrepreneurs in accessing MBDA's computer-based business assistance tools which are available on-site at the Strategic Partner's location;

Examples of other kinds of activities that might be required of the Strategic Partner include, but are not limited to:

- Designate appropriate office space within their facilities for providing NABDC services;
- Establish a library of training materials, how-to guides, business publications and other information, both in print and electronic format, to be made available to Native American entrepreneurs on a walk-in basis;
- Provide high-quality business counseling to Native American business enterprises if the Strategic Partner is one that offers direct client counseling;
- Provide intake services for the NABDC with respect to Native American firms who approach the Strategic Partner for assistance but require counseling by the NABDC;
- Provide Native American firms with high-quality referrals to outside resources where the firm has a need for specialized assistance which is outside the scope of the NABDC Program;
- Support the NABDC project in coordinating MED Week activities within the geographic service area;

In selecting Strategic Partners, each award recipient should consider establishing a diverse group that appropriately reflects the needs of the Native American business community within the service area. The skills, abilities and areas of concentration on the part of the Strategic Partners should be complementary, and collectively the skills and abilities of the Strategic Partners should complement those of the NABDC project operator.

In exchange for its compliance with the foregoing terms, and such other terms as the parties may seek to establish, the Strategic Partner will be eligible to serve as a host for the MBDA suite of business development tools described in the Enhancing the NABDCs Through Technology subsection of this Notice. The Strategic Partner will also be authorized to make public its relationship with MBDA through the NABDC project, and to refer to the partnership in brochures, advertisements, press releases and other media. Through the MOU relationship, the Strategic Partner will also be entitled to receive direct access to MBDA's information base of case studies, best practices, market research, and statistical data.

Computer Requirements

MBDA requires that all award recipients meet certain requirements related to the acquisition, installation, configuration, maintenance and security of information technology (IT) assets in order to ensure seamless and productive interface between and among all grant recipients, Native American-owned businesses, the MBDA federal IT system and the public. These required assets and their configuration are hereinafter referred to as the ''enterprise.'' The basic components of the enterprise are the desktop workstations, the server, local area network (LAN) components and a connection to the Internet.

At a minimum, each grantee shall provide one (1) desktop computer for the exclusive use of each employee delivering Native American business assistance to the public under an award from MBDA. All desktop computers shall be inter-connected with a Server computer using an Ethernet protocol enabling communication with all workstations on the network. The Server shall have a constant, active connection to the Internet during all business hours. The recipient shall ensure that each of his/her employees, to include management, administrative personnel, contractors, full-time, part-time, and non-paid (volunteer) staff have a unique electronic mail (email) address available to the public. Each grantee shall design, develop and maintain, in accordance with the computer requirements, a presence on the Internet's World Wide Web and shall maintain appropriate computer and network security precautions during all periods of funding by MBDA. All IT requirements, as described herein, shall be met within 30 calendar days after the award.

1. *Network Design:* At all locations where services are delivered to the eligible public as defined by Executive Order 11625, the recipient shall operate a ''Client-Server'' configured local area network (LAN) enabling each staff person delivering services to the eligible public exclusive access to a personal computer workstation during all business hours. MBDA shall, from time to time, designate certain configurations of the enterprise hardware and software to meet interface requirements. Currently, MBDA recommends servers use an operating system that is fully compatible with Microsoft Windows NT 4.0 with a service pack five (5) update. Primary Domain Control (PDC) servers or any server providing principal service to the desktops shall contain 18 or more gigabytes (GB) of hard drive space using two or more 9 GB+ disks configured appropriately to ensure data retention should one disk fail. At least one (1) Pentium III processor (CPU), or a CPU ensuring similar speed, shall be used in the PDC server or any other server providing principal service to the desktops. Web servers, mail servers and/or servers maintained by a third party such as an Internet Service Provider (ISP) shall meet the minimum server specifications as stated herein. A ''trusted'' relationship, as appropriate, shall be established and maintained between the MBDA PDC server and those operated by, or operated for, the recipient to ensure access by MBDA system administration personnel during normal business hours. (In a network that consists of two or more domains, each domain acts as a separate network with its own accounts database. Even in the most rigidly stratified organizations, some users in one domain will need to use some or all of the resources in another domain. The usual solution to confirming user access levels among domains is what's called a (trust relationship.) From time to time, MBDA will require access to servers and desktop workstations after business hours and on holidays and weekends. For this purpose, the recipient shall ensure appropriate communications links are active and appropriate personnel on station, upon 24-hour notice from MBDA.

2. *Desktop Workstations:* All desktop systems shall be not less than two (2) calendar years old at time of award and shall contain a processor (CPU) operating at speeds not less than 400 Megahertz (Mhz). Each desktop system shall contain a hard drive with a storage capacity of at least 5 GB. All desktop systems shall have installed an operating system fully compatible with Microsoft Windows NT with MS Office 97 Professional Edition or higher, Microsoft Internet Explorer 4.x. Since workstations may be linked to a live, two-way conference connection with potential clients, at least 50% of all employee workstations shall be fully operational with a qualified staff person positioned at the keyboard during all business hours to include lunch and break periods.

3. *Maintenance and Security:* A network map (''as-built'') reflecting adherence to the computer and networking requirements set forth herein shall be maintained by the recipient for review by MBDA at any time. Each recipient shall designate and train one administrative person competent in the operation of an operations system fully compatible with Windows NT 4.0 network and local area network (LAN) technology as described herein. If a firewall, proxy server or similar security component is used, MBDA's server shall be ''trusted'' for full access to all files relevant for network and administrative operations. From time to time, MBDA shall require certain software be loaded on servers and desktops. In any given year, the cost of this additional software should not exceed $200.00 per workstation and $500.00 per server. Every employee of the Center shall be assigned a unique username and password to access the system. Every employee shall be required to sign a written computer security agreement. (A suggested format for the computer security agreement will be provided at the time of award.) Every manager, employee, and contractor and any other person given access to the computer system shall sign the security agreement and an original copy of the signed agreement shall be kept in the Center's files. A photocopy of the agreement shall be sent by fax to MBDA at: (202) 482–2696 no later than 30 days after the award. All subsequent new hires and associations requiring access to Center or MBDA systems shall read, understand and sign the security agreement prior to issuance of a password. No employee shall have access to the MBDA system without a signed security agreement on file at MBDA.

4. *Web site:* Each recipient shall create and maintain a public web site using a unique address (e.g., www.center-name.com). The first page (Index page) of the web site shall clearly identify the recipient as a Native American Business Development Center funded by the U.S. Department of Commerce's Minority Business Development Agency. The Index page of the web site shall load on software fully compatible with Windows Internet Explorer 4.x browser software using a normal home computer with 56Kb/s analog phone line connection in less than ten (10) seconds. The web site shall contain the names of all managers and employees, the business and mailing address of the Center, business phone and fax numbers and email addresses of the Center and employees, a statement referencing the services available at the Center, the hours under which the Center operates and a link to the MBDA homepage (www.mbda.gov). For purpose of electronically directing clients to the appropriate Center staff, the web site shall also contain a short biographical statement for each employee of the Center including management, contractors, part-time, full-time, and non-paid (volunteer) personnel, providing services directly to the eligible public under an award from

MBDA. This biographical statement shall contain: the full name of the employee, and a brief description of the expertise of the employee to include academic degrees, certifications and any other pertinent information with respect to that employee's qualifications to deliver Native American business assistance services to eligible members of the public.

No third party advertising of commercial goods and services shall be permitted on the site. All links from the site to other than federal, state or local government agencies and non-profit educational institutions must be requested, in advance and in writing, through the Chief Information Officer, MBDA Office of Information Technology Services to the Grants Office for written approval. Such approval shall not be unreasonably withheld but approval is subject to withdrawal if MBDA determines the linked site unsuitable. No employee of the Center, nor any other person, shall use the Center web site for any purpose other than that approved under the terms of the agreement between the recipient and MBDA. Every page of the web site shall be reviewed by the recipient for accuracy, currency, and appropriateness every three (3) months. Appropriate privacy notices and handicapped accessibility will be predominately featured. From time to time, MBDA shall audit the recipient's web site and recommend changes in accordance with the guidelines set forth herein.

5. *Time for Compliance:* Within 30 days after the award, the recipient shall report via email to the Chief Information Officer, MBDA Office of Information Technology Services and the Grants Officer that he/she has complied with all technical requirements as specified herein. Within 30 days after the award, the recipient shall report the name, contact telephone numbers and email addresses of the Project Director, Network or System Administrator. As appropriate, the recipient shall also provide the telephone number and email address for the Technical Contact at the Internet Service Provider (ISP) providing Internet access for the grantee, the IP number of the Domain Name Server (DNS) and/or Primary Domain Control (PDC) server, and any other technical information as specified in the Technology Requirements.

6. *Performance System:* All required performance reporting to MBDA shall be conducted via the Internet using the Performance system to be found at a secure web site (partner.mbda.gov). Within 30 days after the award, each business development specialist (BDS) and/or anyone providing business assistance to the public under the award shall have satisfactorily completed the Performance System Training Course (PSTC). This course is available on-line from the Performance web site (partner.mbda.gov). Only those persons giving direct assistance to the eligible public shall be given passwords and access to enter Performance data into the system. Only trained staff shall enter data into the Performance system. The person giving service to the client should enter performance data, not by administrative personnel. There shall be no ''sharing'' of passwords on the Performance system. Although not required, MBDA encourages input of information on a daily basis.

7. *Data Integrity:* The recipient shall take the necessary steps to ensure that all data entered into MBDA systems, and systems operated by the recipient in support of the award, or by any employee of the recipient is accurate and timely.

Performance Measures

In accordance with 15 CFR Parts 14 and 24, applicants selected will be responsible for the effective management of all functions and activities supported by the financial assistance award. Recipients will be required to use program performance measures in a performance report due thirty (30) days after the end of the second quarter and to provide an end-of-year assessment of the accomplishments of the project using these measures. The end-of-year or final performance report is due 90 days after the end of the budget year. Once the project is awarded, the evaluation criteria, along with the assigned weight value, to be used for measuring the project performance on an ongoing basis are:

1. The number of completed work products (20);

2. The dollar value of transactions (40);

3. The number of Strategic Partners (20);

4. Operational Quality (20)

- Number of new clients (5);
- Number of Client Service Hours (5);
- Client Satisfaction (5);
- Management Score (5).

The minimum performance goals required for the above listed performance measures for each of the solicited geographic service areas are outlined under the Funding Availability sub-heading for each geographic service area. The minimum performance goals are listed on an annual basis and will be broken out into quarterly increments by recipients, within 30 days after the award, for actual evaluation purposes.

Definitions

Completed Work Product—Completed work product consists of work assignments which the project performs under a professional engagement of an eligible client firm. For a task to constitute completed work product it is necessary that the task:

(1) be one requiring the business expertise of the project staff;

(2) be agreed to by the client;

(3) be fully completed and delivered to the client; and

(4) be performed in a high quality and professional manner.

Dollar Value of Transactions—The dollar value of completed financial transactions represents the total principal value of executed contracts, approved loans, equity financing, acquisitions, mergers, or other binding financial agreements secured by clients of the project, with the assistance of project staff. For purposes of this performance element, eligible financial transactions are those which have a specific dollar value, and which increase the revenues of the client firm, expand its capital base, or produce some other direct commercial benefit for client firms. In order to be deemed complete, a financial transaction must be documented by an executed and binding agreement between the client firm and a party capable of performing its obligations under the terms of the agreement.

MBDA recognizes that the financial obligations evidenced by these transactions may be long-term, and require performance over an extended period. Consequently it is not necessary that the funds or other financial value specified under the agreements have actually changed hands for the project to receive credit under this performance element, so long as the agreement of the parties is documented and binding.

Strategic Partners—Strategic partners are those organizations with whom the recipient enters into specific agreements for mutual support. Strategic partners may be either public or private sector institutions, must have a clear mission, and must have a permanent organizational structure. Individuals or organizations that have a loosely defined structure or that operate on an ad hoc basis will not be considered as strategic partners for purposes of this performance element. MBDA will have no relationship with or responsibility to strategic partners.

In order to get credit for obtaining a strategic partner, a project operator must prepare a written agreement identifying:

(1) The responsibilities and duties which the project and the strategic partner each agree to undertake;

(2) The resources which each party agrees to commit to the partnership;

(3) The goals which the project and the strategic partner each seek to achieve by entering into the partnership; and

(4) the point of contact within the strategic partner organization for issues involving the partnership.

(5) That strategic partners will not be allowed to charge and collect fees for services related to the project.

Operational Quality—Operational quality refers to the quality and effectiveness of the project operator's delivery of client services, as evidenced by the following performance elements relating to the day-to-day management of the project:

(a) Number of new clients;

(b) Number of client service hours;

(c) Client satisfaction; and

(d) Management assessment.

Client satisfaction will be determined through a consultation process with clients of the individual NABDC. The consultation will be used to rate the level of quality for client satisfaction.

The management assessment reflects MBDA's own evaluation of the overall management of the project, based on the Agency's internal review of the project's operations. The management assessment reflects such areas as the development of written engagement letters and work plans, proper staffing, adherence to scheduled work hours, recordkeeping, and any other areas which MBDA may deem to be relevant to determining the overall quality of the project's operations.

Performance Standards

The year-to-date performance of an NABDC will be based on the following rating system:

Minimum required percent of goals needed for each rating category	Minimum required points needed for each rating category	Rating categories
100% and above*	Above 100**	Excellent
At least 90%	90–100	Commendable
At least 80%	80–90	Good
At least 75%	75–79	Satisfactory
At least 70%	70–74	Marginal
Below 70%	Below 70.0	Unsatisfactory

Not to exceed 110%.
Not to exceed 110 points.

Performance Incentives

MBDA recognizes and rewards those NABDCs that have maintained high performance throughout their award (three funding periods). NABDCs can earn additional 2 bonus funding periods without competition based upon their overall actual year-to-date performance for the duration of the award. The NABDC Performance Standards outlined above allow each NABDC with an overall ''excellent'' rating for its performance during the initial competitive funding period to qualify for up to 2 additional funding periods without further competition. A year-to-date excellent rating for the first two funding periods and part of the third funding period of an award will result in ''bonus funding periods'' as follows:

- Performance of at least 25% above the minimum goal in each performance element for at least 28 months will allow an NABDC to receive one bonus funding period. Therefore, the award can total up to four funding periods prior to a required competition.

- Performance of at least 25% above the minimum goal in each performance element for at least 6 months of the first bonus funding period will allow an NABDC to receive a second bonus funding period. Therefore, the award can total up to five funding periods prior to a required competition.

No award may be longer than five funding periods without competition no matter what an NABDC's performance happens to be.

Funding Availability: MBDA anticipates that a total of approximately $1.6 million will be available in FY 2001 for Federal assistance under this program. Applicants are hereby given notice that funds have not yet been appropriated for this program. In no event will MBDA or the Department of Commerce be responsible for proposal preparation costs if this program fails to receive funding or is canceled because of other agency priorities.

Financial assistance awards under this program may range from $160,000 to $287,500 in Federal funding per year based upon Native American population, the size of the market and its need for MBDA resources. Applicants must submit project plans and budgets for three years. The annual awards must have Scopes of Work that are clearly severable and can be easily separated into annual increments of meaningful work that will produce measurable programmatic objectives. Maintaining the severability of each annual funding request is necessary to ensure the orderly management and closure of a project in the event funding is not available for the second or third year continuation of the project. Projects will be funded for no more than one year at a time. Funding for subsequent years will be at the sole discretion of the Department of Commerce (DoC) and will depend on satisfactory performance by the recipient and the availability of funds to support the continuation of the project.

Geographic Service Areas

An operator must provide services to eligible clients within its specified geographic service area. MBDA has defined the service area for each award below. To determine its geographic service areas, MBDA uses states, counties, Metropolitan Areas (MA), which comprise metropolitan statistical areas (MSA), consolidated metropolitan statistical areas (CMSA) and primary metropolitan statistical areas (PMSA) as defined by the OMB Committee on MAs (http://www.whitehouse.gov/OMB/inforeg/index.html) and other demographic boundaries as specified herein. Services to eligible clients outside of an operator's specified service area may be requested, on a case-by-case basis, through the appropriate MBDA Regional Director and granted by the Grants Officer.

1. Application: North Carolina Cherokee/Ashville

Geographic Service Area: Cherokee/Ashville, North Carolina MA.

Award Number: 04–10–20007–01.

The recipient is required to maintain the primary NABDC on the Cherokee reservation and a satellite office in the Ashville, North Carolina MA.

Contingent upon the availability of Federal funds, the cost of performance for each of the three 12-month funding periods from January 1, 2001 to

December 31, 2003, is estimated at $188,000. The total Federal amount is $188,000. The minimum cost share of 15% is not required.

The minimum goals for the NABDC are:

Completed Work Products: 124.

Dollar Value of Transactions: $13,976,471.

Number of New Clients: 146.

Number of Client Service Hours: 2,475.

Pre-Application Conference: For the exact date, time and place, contact the Atlanta Regional Office at (404) 730–3300.

For Further Information and a copy of the application kit, contact Robert Henderson, Regional Director.

2. Application: Minnesota Statewide

Geographic Service Area: State of Minnesota.

Award Number: 05–10–20003–01.

Contingent upon the availability of Federal funds, the cost of performance for each of the three 12-month funding periods from January 1, 2001 to December 31, 2003, is estimated at $160,000. The total Federal amount is $160,000. The minimum cost share of 15% is not required.

The minimum goals for the NABDC are:

Completed Work Products: 106.

Dollar Value of Transactions: $12,000,000.

Number of New Clients: 125.

Number of Client Service Hours: 2,125.

Pre-Application Conference: For the exact date, time and place, contact the Chicago Regional Office at (312) 353–0182.

For Further Information and a copy of the application kit, contact Carlos Guzman, Regional Director.

3. Application: New Mexico Statewide

Geographic Service Area: State of New Mexico.

Award Number: 06–10–20009–01.

The recipient is required to maintain its NABDC in Albuquerque, New Mexico. Contingent upon the availability of Federal funds, the cost of performance for each of the three 12-month funding periods from January 1, 2001 to December 31, 2003, is estimated at $188,000. The total Federal amount is $188,000. The minimum cost share of 15% is not required.

The minimum goals for the NABDC are:

Completed Work Products: 124.

Dollar Value of Transactions: $13,976,471.

Number of New Clients: 146.

Number of Client Service Hours: 2,475.

Pre-Application Conference: For the exact date, time and place, contact the Dallas Regional Office at (214) 767–8001.

For Further Information and a copy of the application kit, contact John Iglehart, Regional Director.

4. Application: North/South Dakota Statewide

Geographic Service Area: States of North and South Dakota.

Award Number: 06–10–20010–01.

Contingent upon the availability of Federal funds, the cost of performance for each of the three 12-month funding periods from January 1, 2001 to December 31, 2003, is estimated at $155,000. The total Federal amount is $155,000. The minimum cost share of 15% is not required.

The minimum goals for the NABDC are:

Completed Work Products: 106.

Dollar Value of Transactions: $12,000,000.

Number of New Clients: 125.

Number of Client Service Hours: 2,125.

Pre-Application Conference: For the exact date, time and place, contact the Dallas Regional Office at (214) 767–8001.

For Further Information and a copy of the application kit, contact John Iglehart, Regional Director.

5. Application: Oklahoma Statewide

Geographic Service Area: State of Oklahoma.

Award Number: 06–10–20011–01.

The recipient is required to maintain the NABDC in the Tulsa, Oklahoma MA.

Contingent upon the availability of Federal funds, the cost of performance for each of the three 12-month funding periods from January 1, 2001 to December 31, 2003, is estimated at $235,000. The total Federal amount is $235,000. The minimum cost share of 15% is not required.

The minimum goals for the NABDC are:

Completed Work Products: 156.

Dollar Value of Transactions: $17,647,059.

Number of New Clients: 184.

Number of Client Service Hours: 3,125.

Pre-Application Conference: For the exact date, time and place, contact the Dallas Regional Office at (214) 767–8001.

For Further Information and a copy of the application kit, contact John Iglehart, Regional Director.

6. Application: Arizona Statewide

Geographic Service Area: State of Arizona.

Award Number: 09–10–20007–01.

Contingent upon the availability of Federal funds, the cost of performance for each of the three 12-month funding periods from January 1, 2001 to December 31, 2003, is estimated at $180,000. The total Federal amount is $180,000. The minimum cost share of 15% is not required.

The minimum goals for the NABDC are:

Completed Work Products: 119.

Dollar Value of Transactions: $13,411,765.

Number of New Clients: 140.

Number of Client Service Hours: 2,250.

Pre-Application Conference: For the exact date, time and place, contact the San Francisco Regional Office at (415) 744–3001.

For Further Information and a copy of the application kit, contact Melda Cabrera, Regional Director.

7. Application: California Statewide

Geographic Service Area: State of California.

Award Number: 09–10–20008–01.

Contingent upon the availability of Federal funds, the cost of performance for each of the three 12-month funding periods from January 1, 2001 to December 31, 2003, is estimated at $287,500. The total Federal amount is $287,500. The minimum cost share of 15% is not required.

The minimum goals for the NABDC are:

Completed Work Products: 188.

Dollar Value of Transactions: $21,176,471.

Number of New Clients: 221.

Number of Client Service Hours: 3,750.

Pre-Application Conference: For the exact date, time and place, contact the San Francisco Regional Office at (415) 744–3001.

For Further Information and a copy of the application kit, contact Melda Cabrera, Regional Director.

8. Application: Northwest

Geographic Service Area: States of Washington, Oregon and Idaho.

Award Number: 09–10–20009–01.

Contingent upon the availability of Federal funds, the cost of performance for each of the three 12-month funding periods from January 1, 2001 to December 31, 2003, is estimated at $190,000. The total Federal amount is $190,000. The minimum cost share of 15% is not required.

The minimum goals for the NABDC are:

Completed Work Products: 125.

Dollar Value of Transactions: $14,117,647.

Number of New Clients: 147.

Number of Client Service Hours: 2,500.

Pre-Application Conference: For the exact date, time and place, contact the San Francisco Regional Office at (415) 744–3001.

For Further Information and a copy of the application kit, contact Melda Cabrera, Regional Director.

Matching Requirements

It is not required that an applicant for an award to operate an NABDC propose a cost-share contribution. Cost sharing is the portion of the project cost not borne by the Federal Government. However, an applicant may propose a cost-share contribution in any of the following four means or a combination thereof: (1) Cash contributions, (2) non-cash applicant contributions, (3) third party in-kind contributions, and (4) client fees for services rendered.

If the NABDC chooses to contribute a cost-share amount by charging fees, there are policy restrictions with which it must comply:

First, client fees charged for one-on-one assistance must be based on a rate of $100 per hour. Second, the NABDC must set fee rates based on the following chart:

Gross receipts of client	Base rate for services rendered	Percent of cost borne by client	Client fee per hour
$0–99,999	$100.00	10	$10.00
100,000–299,999	100.00	20	20.00
300,000–999,999	100.00	30	30.00
1 Million–2,999,999	100.00	40	40.00
3 Million–4,999,999	100.00	50	50.00
5 Million and Above	100.00	60	60.00

Third, the NABDC must contribute cash for uncollected fees that were included as part of the cost sharing contribution committed for this award. Fourth, client fees applied directly to the award's cost sharing requirement must be used in furtherance of the program objectives. Fifth, if the NABDC elects to charge fees, they must be charged to all eligible clients, regardless of minority group identification.

Type of Funding Instrument

Financial assistance awards in the form of cooperative agreements will be used to fund this program. MBDA's substantial involvement with recipients will include performing the following duties to further the NABDC's objectives:

a. *Post-Award Conferences*—MBDA shall conduct post-award conferences for all NABDC award recipients to insure that each NABDC has a clear understanding of the program and its components. The conference will: (1) Provide an MBDA Directory for NABDCs. Orient NABDC program officers; (2) Explain program reporting requirements and procedures; and (3) Identify available resources that can enhance the capabilities of the NABDC. Provide detailed information about MBDA's business and other information systems.

b. *Networking, Promotion and Information Exchange*—MBDA shall provide the following: (1) Access to business information systems, which support the work of the NABDC, as described in the Enhancing the NABDCs Through Technology section. This information will be provided by MBDA's Office of Information Technology. The specific information systems and access to them will be provided at the time of the award for a particular NABDC; (2) Sponsor one national and at least one regional conference; (3) Expand the Phoenix data bank of Native American-owned firms by requiring other MBDA-funded programs to provide additional entries; (4) Promote the exchange of business opportunity information within the MBDA funded system using the Phoenix and Opportunity databases located at *www.mbda.gov;* (5) Work closely with the NABDC to establish a system in which procurement and contract opportunities can be shared with the network of NABDCs. This system will include opportunities identified throughout the MBDA network using the Phoenix and Opportunity databases located at *www.mbda.gov;* (6) Help promote special events to be scheduled at the local community, state and national levels in celebration of MED Week, which occurs annually; and (7) Identify Federal, state and local governments, and private sector market opportunities to the NABDCs using the Phoenix and Opportunity databases located at *www.mbda.gov.*

c. *Project Monitoring*—MBDA will systematically monitor the performance of the NABDC. This monitoring includes regular review of data input to the performance database system, assessment of the end of the second quarter progress report, and an on-site review, when deemed necessary and appropriate by the regional office, of the center's client files to verify NABDC performance, reported assistance and interviews with clients assisted. In consultation with clients of the individual NABDC, MBDA will assess the Center's effectiveness in providing business development services to their respective Native American business communities. MBDA will then provide a report of findings and recommendations for improvement as a result of evaluations and monitoring visits. MBDA will approve qualifications of key NABDC staff and respond in a timely manner to correspondence requesting MBDA action.

Eligibility Criteria

For-profit and non-profit organizations (including sole-proprietorships), state and local government entities, American Indian Tribes, and educational institutions are eligible to operate NABDCs.

Award Period

The total award period is three (3) years. Funding will be provided annually at the discretion of MBDA and DoC, and will depend upon satisfactory performance by the recipient and availability of funds to continue the project. Project proposals accepted for funding will not compete for funding in subsequent funding periods within the approved award period. Publication of this notice does not obligate MBDA or DoC to award any specific cooperative agreement or to obligate all or any part of available funds.

Indirect Costs

The total dollar amount of the indirect costs proposed in an application under this program must not exceed the indirect cost rate negotiated and approved by a cognizant Federal agency prior to the proposed effective date of the award or 100 percent of the total

proposed direct costs dollar amount in the application, whichever is less.

Application Forms and Package

Standard Forms 424, Application for Federal Assistance; 424A, Budget Information-Non-Construction Programs; and 424B, Assurances-Non-Construction Programs, SF–LLL (Rev. 7–97); Department of Commerce forms, CD–346, Applicant for Funding Assistance, CD–511, Certifications Regarding Debarment, Suspension and Other Responsibility matters: Drug-Free Workplace Requirements and Lobbying, CD–512, Certifications Regarding Debarment, Suspension, Ineligibility and Voluntary Exclusion-Lower Tier Covered Transactions and Lobbying shall be used in applying for financial assistance. These forms may be obtained by (1) contacting MBDA as described in the ''CONTACT'' section above; (2) by downloading Standard forms at www.whitehouse.gov/OMB/grants/index.html; (3) and Department of Commerce forms may be downloaded at *www.doc.gov/forms.* or (4) by applying on-line via the World Wide Web at MBDA's web site located at www.mbda.gov/e-grants.

Proposal Format

The structure of the proposal should contain the following headings, in the following order:

I. Table of Contents
I. Program Narrative
  1. Applicant Capability
  2. Resources
  3. Techniques and Methodologies
  4. Costs
II. Forms
  Pages of the proposal should be numbered consecutively.

Project Funding Priorities

MBDA is especially interested in receiving innovative proposals that focus on the following: (1) identifying and working to eliminate barriers which limit the access of Native American businesses to markets and capital; (2) identifying and working to meet the special needs of Native American businesses seeking to obtain large-scale contracts (in excess of $500,000) with institutional customers; and (3) promoting the understanding and use of Electronic Commerce by the Native American business community.

Evaluation Criteria

Proposals will be evaluated and applicants will be selected based on the following criteria.

1. Applicant Capability (45 points)

The applicant's proposal will be evaluated with respect to the applicant firm's experience and expertise in providing the work requirements listed. Specifically, the proposals will be evaluated as follows:

- Experience in and knowledge of the Native American business sector and strategies for enhancing its growth and profitability (10 points);
- Resources and professional relationships within the corporate, banking and investment community that may be beneficial to Native American-owned firms (10 points);
- Experience and expertise in advocating on behalf of Native American businesses, both as to specific transactions in which a Native American business seeks to engage, and as to broad market advocacy for the benefit of the Native American community at large (10 points); and
- Assessment of the qualifications, experience and proposed role of staff who will operate the project, including possessing the expertise in utilizing information systems as contemplated under the Computer Requirements section of this Notice. (15 points).

Qualifications of the project director of the NABDC are of particular importance and must be included as part of the application, along with an original copy of his/her college transcript and a letter committing to one (1) year's service. Position descriptions and qualification standards for all staff should be included as part of the application. Applicants must provide a copy of their Articles of Incorporation, by-laws and IRS 501(c)(3) non-profit letter or other evidence of non-profit status.

2. Resources (25 points)

The applicant's proposal will be evaluated according to the following sub-criteria:

- Discuss how you plan to recruit, establish and maintain the network of 3 Strategic Partners (10 points).
- Discuss how you plan to accomplish the computer hardware and software requirements (5 points).
- Discuss those resources (not included as part of the cost-sharing arrangement) that will be used. Include commitment letters from those resources listed and indicate their willingness to work with the applicant. These resources can include such items as computer facilities, voluntary staff time and space, and financial resources. Three to five letters of support (with telephone numbers) from business or community organizations should be included from those resources willing to work with the applicant (10 points).

3. Techniques and Methodologies (20 points)

The applicant's proposal will be evaluated with respect to the proposed action plans and operation techniques. Specifically, the proposals will be evaluated as follows:

- The applicant's specific plan-of-action detailing *how* each work requirement, except for Strategic Partners which is addressed under Resources, will be met and *how* the techniques to be used will be implemented. The applicant will be evaluated on how effectively and efficiently all staff time will be used to achieve the work requirements (10 points).
- Discuss each performance measure by relating each one to the financial, information and market resources available in the geographic service area to the applicant and how the goals will be met (10 points).

4. Proposed Budget and Supporting Budget Narrative (10 points)

The applicant's proposal will be evaluated on the following sub-criteria:

- Reasonableness, allowability and allocability of costs (10 points).

Bonus Points: Proposed cost sharing, although not a requirement for NABDC application, will be awarded bonus points on the following scale: more than 0–5%—1 point; 6–10%—2 points; 11–15%—3 points; 16–20%—4 points; and over 20%—5 points.

An application must receive an average of at least 70% of the total points available for all four evaluation criterion, in order for the application to be considered for funding.

Indirect Costs: The indirect cost policies contained in OMB Circulars A–21, A–87 and A–122 will apply to MBDA awards for its business development programs. Indirect costs are those costs proposed for *common* or *joint* objectives and which cannot be readily identified with a particular cost objective. Therefore, if the MBDA award is to be the sole source of support for the applicant organization, all costs are direct costs and no indirect costs should be proposed.

Organizations with indirect costs that do not have an established indirect cost rate negotiated and approved by a cognizant Federal agency may still propose indirect costs. For the recipient to recover indirect costs, however, the proposed budget must include a line item for such costs. Also, the recipient must prepare and submit a cost allocation plan and indirect cost rate proposal as required by applicable OMB circulars (A–21, A–87 and A–122). The

allocation plan and the rate proposal must be submitted to the Department's Office of Inspector General (OIG) for review and approval within 90 days from the effective date of the proposed award.

Audit Costs: Audits shall be performed in accordance with audit requirements contained in Office of Management and Budget Circular A–133, Audits of States, Local Governments, and Non-Profit Organizations, revised June 30, 1997. OMB Circular A–133 requires that non-profit organizations, government agencies, Indian tribes and educational institutions expending $300,000 or more in federal funds during a one-year period conduct a single audit in accordance with guidelines outlined in the circular. Applicants are reminded that other audits may be conducted by the Department's Office of Inspector General.

Management Fee: For-profit as well as not-for-profit organizations may negotiate their management fees, but they shall not exceed 7% of *total* estimated direct costs (Federal plus non-Federal) for the proposed award.

Program Income: Many of MBDA's business development services programs allow their awardees to charge a fee for services rendered to clients. Where applicable, fees are considered program income and shall be accounted for and may be used to finance the non-Federal cost-share of the project. Any excess fee income shall be used to further the program purpose in accordance with the terms and conditions of the award.

Selection Procedures

Prior to the formal paneling process, each application will receive an initial screening to ensure that all required forms, signatures and documentation are present. Each application will receive an independent, objective review by a panel qualified to evaluate the applications submitted. MBDA anticipates that the review panel will be made up of at least three independent reviewers who review all applications based on the above criteria. The review panel will evaluate and rank the proposals. The Director of MBDA makes the final recommendation to the Department of Commerce Grants Officer regarding the funding of applications, taking into account the following selection criteria:

1. The evaluations and rankings of the independent review panel;
2. The degree to which applications address MBDA priorities as established under the project funding priorities;
3. The availability of funding.

Unsuccessful Competition

On occasion, competitive solicitations or competitive panels may produce less than optimum results, such as competition resulting in the receipt of no applications or competition resulting in all unresponsive applications received. If the competition results in the receipt of only one application, it may or may not require additional action from MBDA depending upon the competitive history of the area, the quality of the application received, and the time and cost limits involved. In the event that any or all of these conditions arise, MBDA shall take the most time and cost-effective approach available that is in the best interest of the Government. This includes, but is not limited to: (1) Re-competition or (2) Re-Paneling or (3) Negotiation.

Other Requirements

1. *Purchase of American-Made Equipment and Products:* Applicants are hereby notified that they are encouraged, to the greatest extent practicable, to purchase American-made equipment and products with funding provided under this program.

2. *Paperwork Reduction Act:* This Notice involves collections of information subject to the Paperwork Reduction Act, which have been approved by OMB under OMB control numbers 0348–0043, 0348–0044, 0348–0040, and 0348–0046. Notwithstanding any other provision of law, no person is required to respond to nor shall a person be subject to a penalty for failure to comply with a collection of information subject to the requirements of the Paperwork Reduction Act unless that collection of information displays a current valid OMB control number.

3. *Federal Policies and Procedures:* Recipients and subrecipients are subject to all Federal laws and Federal and DoC policies, regulations, and procedures applicable to Federal financial assistance awards.

4. *Past Performance:* Unsatisfactory performance under prior Federal awards may result in an application not being considered for funding.

5. *Preaward Activities:* If applicants incur any costs prior to an award being made, they do so solely at their own risk of not being reimbursed by the Government. Notwithstanding any verbal or written assurance that may have been received, there is no obligation on the part of DoC to cover pre-award costs.

6. *No Obligation for Future Funding:* If an applicant is selected for funding, DoC has no obligation to provide any additional future funding in connection with that award. Renewal of an award to increase funding or extend the period of performance is at the total discretion of DoC.

7. *Delinquent Federal Debts:* No award of Federal funds shall be made to an applicant who has an outstanding delinquent Federal debt until either (i) Delinquent account is paid in full, (ii) A negotiated repayment schedule is established and at least one payment is received, or (iii) Other arrangements satisfactory to DoC are made.

8. *Name Check Review:* All non-profit and for-profit applicants are subject to a name check review process. Name checks are intended to reveal if any key individuals associated with the applicant have been convicted of or are presently facing criminal charges such as fraud, theft, perjury or other matters which significantly reflect on the applicant's management honesty or financial integrity.

9. *Primary Applicant Certifications:* All primary applicants must submit a completed Form CD–511, ''Certifications Regarding Debarment, Suspension and Other Responsibility Matters; Drug-Free Workplace Requirements and Lobbying,'' and the following explanations are hereby provided:

(i) *Nonprocurement Debarment and Suspension:* Prospective participants (as defined at 15 CFR Part 26, Section 105) are subject to 15 CFR Part 26, ''Nonprocurement Debarment and Suspension'' and the related section of the certification form prescribed above applies;

(ii) *Drug-Free Workplace*:

Grantees (as defined at 15 CFR Part 26, Section 605) are subject to 15 CFR Part 26, Subpart F, ''Governmentwide Requirements for Drug-Free Workplace (Grants)'' and the related section of the certification form prescribed above applies;

(iii) *Anti-Lobbying:* Persons (as defined at 15 CFR Part 28, Section 105) are subject to the lobbying provisions of 31 U.S.C. 1352, ''Limitation on use of appropriated funds to influence certain Federal contracting and financial transactions,'' and the lobbying section of the certification form prescribed above applies to applicants/bids for grants, cooperative agreements, and contracts for more than $100,000, and loans and loan guarantees for more than $150,000, or the single family maximum mortgage limit for affected programs, whichever is greater; and

(iv) *Anti-Lobbying Disclosures:* Any applicant that has paid or will pay for lobbying using any funds must submit an SF–LLL, ''Disclosure of Lobbying

Activities,'' as required under 15 CFR Part 28, Appendix B.

10. *Lower Tier Certifications:* Recipients shall require applications/bidders for subgrants, contracts, subcontracts, or other lower tier covered transactions at any tier under the award to submit, if applicable, a completed Form CD–512, ''Certifications Regarding Debarment, Suspension, Ineligibility and Voluntary Exclusion-Lower Tier Covered Transactions and Lobbying'' and disclosure form, SF–LLL, ''Disclosure of Lobbying Activities.'' Form CD–512 is intended for the use of recipients and should not be transmitted to DoC. SF–LLL submitted by any tier recipient or subrecipient should be submitted to DoC in accordance with the instructions contained in the award document.

11. *False Statements:* A false statement on an application for Federal financial assistance is grounds for denial or termination of funds, and grounds for possible punishment by a fine or imprisonment as provided in 18 U.S.C. 1001.

12. *Intergovernmental Review:* Applications under this program are not subject to Executive Order 12372, ''Intergovernmental Review of Federal Programs.''

13. *Executive Order 12866:* This Notice was determined to be not significant for purposes of Executive Order 12866.

Dated: August 14, 2000.

Courtland Cox,

Director, Minority Business Development Agency.

Juanita E. Berry,

Federal Register Liaison Officer, Minority Business Development Agency.

[FR Doc. 00–21859 Filed 8–25–00; 8:45 am]

BILLING CODE 3510–21–P

DEPARTMENT OF COMMERCE

National Institute of Standards and Technology

Announcing a Meeting of the; Computer System Security and Privacy Advisory Board

AGENCY: National Institute of Standards and Technology, Commerce.

ACTION: Notice of Meeting.

SUMMARY: Pursuant to the Federal Advisory Committee Act, 5 U.S.C. App., notice is hereby given that the Computer System Security and Privacy Advisory Board (CSSPAB) will meet Tuesday, September 12, 2000, Wednesday, September 13, 2000, and Thursday, September 14, 2000, from 9:00 a.m. to 5:00 p.m. The Advisory Board was established by the Computer Security Act of 1987 (Public Law 100–235) to advise the Secretary of Commerce and the Director of NIST on security and privacy issues pertaining to federal computer systems. All sessions will be open to the public. Details regarding the Board's activities are available at http://csrc.nist.gov/csspab/.

DATES: The meeting will be held on September 12–14, 2000, from 9:00 a.m. to 5:00 p.m.

ADDRESSES: The meeting will take place at the National Institute of Standards and Technology, Administration Building, Lecture Room D, Gaithersburg, MD.

Agenda

- Welcome and Overview
- Issues Update and Briefings
- Legislative Updates
- NIST Computer Security Updates
- Project Matrix Briefing
- Metrics Workshop Follow-on
- Pending Business/Discussion
- Public Participation
- Agenda Development for December 2000 meeting
- Wrap-Up

Note that agenda items may change without notice because of possible unexpected schedule conflicts of presenters.

Public Participation

The Board agenda will include a period of time, not to exceed thirty minutes, for oral comments and questions from the public. Each speaker will be limited to five minutes. Members of the public who are interested in speaking are asked to contact the Board Secretariat at the telephone number indicated below. In addition, written statements are invited and may be submitted to the Board at any time. Written statements should be directed to the CSSPAB Secretariat, Information Technology Laboratory, 100 Bureau Drive, Stop 8930, National Institute of Standards and Technology, Gaithersburg, MD 20899–8930. It would be appreciated if 35 copies of written material were submitted for distribution to the Board and attendees no later than September 7, 2000. Approximately 15 seats will be available for the public and media.

FOR FURTHER INFORMATION CONTACT: Mr. Edward Roback, Board Secretariat, Information Technology Laboratory, National Institute of Standards and Technology, 100 Bureau Drive, Stop 8930, Gaithersburg, MD 20899–8930, telephone: (301) 975–3696.

Dated: August 17, 2000.

Karen H. Brown,

Deputy Director, NIST.

[FR Doc. 00–21890 Filed 8–25–00; 8:45 am]

BILLING CODE 3510–CN–M

DEPARTMENT OF COMMERCE

National Oceanic and Atmospheric Administration

[Docket No. 000712204–0204–01]

RIN: 0648–XA56

Office of Research and Applications Ocean Remote Sensing Program Notice of Financial Assistance

AGENCY: National Oceanic and Atmospheric Administration (NOAA), National Environmental Satellite, Data, and Information Service (NESDIS).

ACTION: Notice of availability of Federal assistance.

SUMMARY: The NESDIS Office of Research and Applications (ORA) announces the availability of Federal assistance for fiscal year 2001 (FY 2001) in the Ocean Remote Sensing Program area. This announcement provides details on the technical program and includes detailed guidelines on proposal submission, evaluation criteria, and selection procedures. Selected recipients will either receive a grant, or enter into a cooperative agreement with ORA, depending upon the amount of the Office's involvement in the project. A grant will be awarded where the proposed work is considered substantially independent work. A cooperative agreement will be implemented where there is substantial involvement by ORA in the proposed work.

All applicants are required to submit a NOAA Grants Application Package and project proposal. The standard NOAA grants application forms can be obtained from the NOAA Website at *http://www.rdc.noaa.gov/~grants/index.html.* If Internet access is not available, forms can be obtained by mail by contacting the NOAA/NESDIS/ORA at (301) 763–8102. All Grants Application Packages must include Forms SF–424, SF–424A, SF–424B, and CD–511. If applicable, applicants must also include Anti-lobbying Disclosure Form SF–LLL, and Lower-Tier Certification Form CD–512. To determine SF–LLL and CD–512 applicability, applicants are directed to the ''General Information for All Programs'' section of this notice, Anti-lobbying Disclosures and Lower-Tier Certifications subheadings. FY 2001

funding for this program will be contingent upon the availability of funds but is anticipated to be approximately $350,000. Individual awards for FY 2001 are expected to range from a minimum of $50,000 to $150,000. Successful proposals that are deemed to be exceptionally meritorious by the Selection Panel may be larger. There is no guarantee that all the areas of research interest identified in this Notice will be able to receive funding consideration.

Pursuant to Executive Orders 12876, 12900, and 13021, the Department of Commerce, National Oceanic and Atmospheric Administration (DOC/NOAA) is strongly committed to broadening the participation of Historically Black Colleges and Universities (HBCU), Hispanic Serving Institutions (HSI), and Tribal Colleges and Universities (TCU) in its educational and research programs. The DOC/NOAA vision, mission, and goals are to achieve full participation by Minority Serving Institutions (MSI) in order to advance the development of human potential, to strengthen the Nation's capacity to provide high-quality education, and to increase opportunities for MSIs to participate in and benefit from Federal Financial Assistance programs. DOC/NOAA encourages all applicants to include meaningful participation of MSIs.

DATES: Proposals with completed Grants Applications Package must be received by ORA no later than 5:00 p.m. EST on November 28, 2000. Final selection is anticipated to be completed by approximately March 1, 2001. The earliest anticipated start date is July 1, 2001.

ADDRESSES: Send all proposals to the Office of Research and Applications; NOAA/NESDIS; 5200 Auth Road; Room 711; Camp Springs, MD 20746–4304. Proposals should cite this Notice and be sent to the attention of Dr. H. Lee Dantzler, Jr., Chief, Oceanic Research and Applications Division.

FOR FURTHER INFORMATION CONTACT: Administrative questions should be directed to Kathy LeFevre, (301) 763–8127 or klefevre@nesdis.noaa.gov. Technical point of contact is Dr. H. Lee Dantzler, Jr. at (301) 763–8184 or ldantzler@nesdis.noaa.gov.

SUPPLEMENTARY INFORMATION:

Authority: Statutory authority for these programs is provided under 33 U.S.C. 1442 (Research program respecting possible long-range effects of pollution, overfishing, and man-induced changes of ocean ecosystems); 15 U.S.C. 1540 (Cooperative Agreements); and 49 U.S.C. 44720 (Meteorological Services).

Catalog of Federal Domestic Assistance (CFDA): This program is listed in the Catalog of Federal Domestic Assistance under Number 11.440 (Research in Remote Sensing of the Earth and Environment).

General Information

Environmental prediction, assessment, and the conservation and management of coastal and oceanic resources are primary functions of NOAA. NESDIS, one of the five principal offices within NOAA, is the world's largest civil, operational environmental space organization and operates the Nation's civil geostationary and polar-orbiting environmental satellites. NESDIS also facilitates the acquisition of non-U.S. environmental satellite data through international agreements. Satellite systems provide data and information that are critical to weather forecasting; natural disaster response and mitigation; climate change forecasts and research; living and non-living marine resources management; and coastal and open oceanographic research. ORA provides overall guidance and direction to the oceanic, atmospheric, and climate research and applications activities of NESDIS. The Ocean Remote Sensing Program, managed by ORA's Oceanic Research and Applications Division, has as its goal to help build capabilities nationwide to make expanded and improved use of earth-orbiting satellite data and information. The Program has particular interest in activities relating to sustaining healthy coasts, building sustainable fisheries, recovering protected species, providing improved environmental forecasts, and preparing for future NOAA operational satellite missions.

Program Description

The Ocean Remote Sensing Program seeks to expand the use of and improve access to operational satellite oceanographic data by state, Federal, regional governmental, and non-profit entity users. The program is seeking proposals in each of the following research areas listed in approximate priority order: (1) The application of satellite oceanographic data and information in coastal and oceanic marine (living and non-living) resources management; (2) The application of satellite oceanographic data to gain improved insight on regional oceanographic factors affecting important fisheries and critical ecosystems (e.g., marine protected areas, essential fish habitat, early life recruitment and survival, stock assessment, protected species, important socio-economic interactions, and coral reefs); (3) Research leading to the development of innovative data archive and data management techniques that may significantly simplify and improve user access to satellite oceanographic data, especially by users employing Internet and geographic information systems (GIS) technologies; (4) Research to increase the accuracy, precision and quantitative use of satellite oceanographic data in coastal and ocean surface research investigations (*e.g.,* sea surface temperature, ocean color, ocean surface winds, sea level and surface height, and sea surface roughness derived from spaceborne synthetic aperture radar); (5) Research supporting the development of future ocean sensing capable U.S. satellite systems (e.g., the National Polar-Orbiting Operational Environmental Satellite System (NPOESS)); and (6) Research leading to improved coastal and oceanic climatologies using satellite oceanographic data. All proposals will be evaluated in the context of the potential value of the proposed work to a targeted user community (to be identified in the proposal), and the relationship of the proposed work to the NOAA/NESDIS mission (as described in the ''General Information'' section of this Notice).

Background

ORA provides overall guidance and direction to the research and application activities of NESDIS. ORA provides expert service to other NESDIS Offices and Centers relating to satellite sensor development, instrument performance, and systems hardware components. It coordinates with other NESDIS Offices and Centers, appropriate NOAA units, and U.S. Government agencies in the implementation and evaluation of operational and research satellite data and products that result from research activities. It coordinates research activities of mutual interest with the academic community, NASA laboratories, and with foreign organizations, particularly those in satellite operating countries. ORA provides advice to the Assistant Administrator concerning interfaces among the Centers and Offices of NESDIS and among the major NOAA elements in relation to broad scale scientific projects. It also produces and provides specific programmatic studies, statistics, and scientific recommendations as needed.

Project Proposals

Project proposals, a signed original and two copies, must be received by

ORA by the time and date indicated in the **DATES** section of this Notice. Proposals received after that time and date will not receive consideration. In addition to the information requested below, the applicant must submit a complete NOAA grants application package (with signed originals), and curriculum vitae (CV) for the principal investigator(s). All project proposals must include the sections identified below and total no more than eight pages in double-spaced, 12-point font format. The title page, detailed budget, investigator(s) CV, and any appendices are not included in the eight page limit. Multiple year proposals, in annual increments up to a maximum of three years, will be considered; however, funding beyond the first year will be dependent upon satisfactory performance and the continued availability of funds.

1. *Title Page.* The title page shall provide the project title, the lead Principal Investigator (PI) name(s), Partner name(s) if any, the respective affiliations, complete addresses, telephone, FAX, and e-mail information. The title page will also present the total proposed cost, the proposed budget period, and a brief abstract of the proposed work. The title page shall also identify the specific research area of interest (from those listed by number in the ''Program Description'' in this Notice), and clearly identify that the proposal is in response to this Notice. The title page should be signed by the PI(s) and the institutional representative of the PI's organization.

2. *Goals and Objectives.* Identify broad project goals and quantifiable objectives.

3. *Background/Introduction.* State the problem and summarize existing efforts in the context of present knowledge and/or capabilities.

4. *User Application Audience.* Describe specifics of how the project will contribute to improving or resolving an issue with an identified primary target audience. The target audience must be explicitly stated.

5. *Project Description/Methodology.* Describe the specifics of the proposed project (4 pages maximum).

6. *Project Partners.* Identify any project partners, their respective roles, and their contributions/relationships to the proposed effort.

7. *Milestones and Outcomes.* List target milestones, time lines, and desired outcomes. The potential value of the proposed work to the identified target audience's needs should be identified in this section of the proposal.

8. *Project Budget.* Provide a detailed budget breakdown by category (and in multiple year proposed efforts, by year) and a brief narrative to provide the basis for the budget.

Selection Process

A project selection panel will be convened to review and to provide recommendations on selection using the criteria published in these guidelines. Each proposal will be reviewed by at least three reviewers who are qualified to review the proposed work. These reviewers may include both Federal and non-Federal individuals. The Oceanic Research and Applications Division will be limited to no more than one individual (of the three) who will participate in the review process. Proposals will be ranked according to a score (explained below) and presented to the Selecting Official (the Chief, Oceanic Research and Applications Division) for final selection. In addition to the individual proposal rankings assigned by the panel, the Selecting Official may consider program policy factors such as balance among the prioritized research areas of programmatic interest described in the ''Program Description'' section of this Notice, and (for cooperative agreements that have substantial ORA involvement) geographic location in making a final decision.

Selection Criteria (with weights)

All proposals will be scored by the panel members according to the following criteria:

1. Relevance of the proposed research to NESDIS and NOAA missions (25 points)

Does the proposed project (directly or indirectly) address a critical need? Are the project goals and objectives clear and concise? Does the proposed project have a clearly defined user audience? Are there direct ties to relevant NESDIS, NOAA, Federal, regional, state or local activities?

2. Technical Merit (25 points)

Is the approach technically sound? Does the proposed project build on existing knowledge? Is the approach innovative?

3. Applicability and Effectiveness (20 points)

Does the proposed work have the potential of increasing the accessibility, usability (*i.e.*, easily understood and used), and relevance of satellite observed oceanographic data and information by the identified target user community? Does the proposed work provide for flexible, early and effective opportunities for user involvement (*e.g.*, through cooperative experiments, demonstrations, or user evaluations)? Does the proposed work have the potential for long-term (lasting) value and widespread applicability? Does the proposed work include an effective mechanism by which the project's progress can be evaluated?

4. Cost Efficiency (15 points)

Is the budget realistic and commensurate with the project needs? Does the budget narrative justify the proposed expenditures?

5. Meaningful Participation of Minority Serving Institution(s) (10 points)

Is there meaningful participation by an MSI in the proposed work? Are there subgrants, subcontracts or other partnership arrangements proposed with MSIs?

6. Overall Qualifications (5 points)

Are the proposers capable of conducting a project of the scope and scale proposed (*i.e.*, scientific, professional, facility, and administrative resources/capabilities)? Are appropriate partnerships going to be employed to achieve the highest quality content and maximal efficiency?

Selection Schedule

Proposals submitted in response to this Notice will be reviewed once during the year according to the following schedule:

Proposals due—November 28, 2000
Final Selection—Approximately March 1, 2001
Grant start date—Approximately July 1, 2001

(**Note:** All deadlines are for receipt by ORA no later than 5 p.m. EST on the due date identified.)

Funding Availability

Specific funding available for awards in response to this Notice will be finalized after the NOAA budget for FY 2001 is authorized. Total funding available for this Notice is anticipated to be approximately $350,000. Individual annual awards are expected to range from a minimum of $50,000 to $150,000. Successful proposals that are deemed by the selection panel to be exceptionally meritorious may be larger. There is no guarantee that sufficient funds will be available to make awards for all approved projects, nor that all research areas of interest will be supported. Publication of this Notice does not obligate NOAA toward any specific grant or cooperative agreement or to obligate all or any parts of the available funds.

Cost Sharing

There is no requirement for cost sharing in response to this program announcement and no additional weight will be given to proposals with cost sharing.

Eligibility Criteria

Applications for grants or cooperative agreements under this program announcement may be submitted, in accordance with the procedures set forth in these specific guidelines, by any U.S. state, territory, commonwealth, local or regional resource management agency; college or university; private industry; nonprofit organization; or cooperative research unit. Applicants should carefully read the ''General Information for All Programs'' section for additional submission guidelines, paying special attention to indirect cost limitations. Federal agencies or institutions are not eligible to receive Federal assistance under this Notice, but may be included as a participating partner(s) in the proposed work.

General Information for All Programs

Indirect Costs

The total dollar amount of the indirect costs proposed in an application under this program notice must not exceed the current indirect cost rate negotiated and approved by the applicant's cognizant Federal agency (prior to the proposed effective date of the award), or 35 percent of the total proposed direct costs dollar amount in the application, whichever is less.

Federal Policies and Procedures

Recipients and sub-recipients are subject to all Federal laws and Federal and DOC policies, regulations, and procedures applicable to Federal assistance awards.

Name Check Review

All non-profit and for-profit applicants are subject to a name check review process. Name checks are intended to reveal if any key individuals associated with the recipient have been convicted of, or are presently facing, criminal charges such as fraud, theft, perjury, or other matters that significantly reflect on the recipient's management, honesty, or financial integrity.

Past Performance

Unsatisfactory performance under prior Federal awards may result in an application not being considered for funding.

Pre-Award Activities

If applicants incur any costs prior to an award being made, they do so solely at their own risk of not being reimbursed by the Government. Notwithstanding any verbal or written assurance that may have been received, there is no obligation on the part of DOC to cover pre-award costs, should an award not be made or funded at a level less than requested.

No Obligation for Future Funding

If the application is selected for funding, DOC has no obligation to provide any additional future funding in connection with the award. Renewal of an award to increase funding or extend the period of performance is at the total discretion of DOC.

Delinquent Federal Debts

No award or Federal funds shall be made to an applicant who has an outstanding delinquent Federal debt until either:

(i) The delinquent account is paid in full,

(ii) A negotiated repayment schedule is established and at least one payment is received, or

(iii) Other arrangements satisfactory to DOC are made.

Primary Applicant Certifications

All organizations or individuals preparing grant applications must submit a completed Form CD–511 ''Certifications Regarding Debarment, Suspension, and Other Responsibility Matters; Drug-Free Workplace Requirements and Lobbying'', and explanations are hereby provided:

Non-Procurement Debarment and Suspension

Prospective participants (as defined at 15 CFR part 26, Section 105) are subject to 15 CFR part 26, ''Nonprocurement Debarment and Suspension'' and the related section of the certification form prescribed above applies.

Drug-Free Workplace

Grantees (as defined at 15 CFR part 26, Section 605) are subject to 15 CFR part 26, subpart f, ''Government-wide Requirements for Drug-Free Workplace (Grants)'' and the related section of the certification form prescribed above applies.

Anti-Lobbying

Persons (as defined at 15 CFR part 28, Section 105) are subject to the lobbying provisions of 31 U.S.C. 1352, ''Limitation on use of appropriated funds to influence certain Federal contracting and financial transactions'', and the lobbying section of the certification form prescribed above applies to application/bids for grants, cooperative agreements, and contracts for more than $100,000, and loans and loan guarantees for more than $150,000.

Anti-Lobbying Disclosures

Any applicant that has paid or will pay for lobbying using any funds must submit an SF–LLL, ''Disclosure of Lobbying Activities'', as required under 15 CFR part 28, Appendix B.

Lower-Tier Certifications

Recipients shall require applicants/bidders for sub-grants, contracts, subcontracts, or other lower-tier-covered transactions at any tier under the award to submit, if applicable, a completed Form CD–512, ''Certifications Regarding Debarment, Suspension, Ineligibility and Voluntary Exclusion-Lower Tier Covered Transactions and Lobbying'' and disclosure form, SF–LLL, ''Disclosure of Lobbying Activities''. Form CD–512 is intended for the use of recipients and should not be transmitted to DOC. SF–LLL submitted by any tier recipient or sub-recipient should be submitted to DOC in accordance with the instructions contained in the award document.

False Statements

A false statement on an application is grounds for denial or termination of funds and grounds for possible punishment by a fine or imprisonment as provided in 18 U.S.C. 1001.

Intergovernmental Review

Applications under this program are subject to Executive Order 12372, ''Intergovernmental Review of Federal Programs.''

Buy American-Made Equipment or Products

Applicants are hereby notified that they will be encouraged, to the greatest extent practicable, to purchase American-made equipment and products with funding provided under this program in accordance with Congressional intent.

Classification

Executive Order 12866

This action has been determined to be not significant for purposes of Executive Order 12866.

Notwithstanding any other provision of law, no person is required to respond to, nor shall a person be subject to, a penalty for failure to comply with a collection of information subject to the requirements of the Paperwork Reduction Act (PRA) unless that

collection of information displays a currently valid OMB control number. This notice contains a collection of information requirements subject to the Paperwork Reduction Act. The use of Standards Forms 424, 424A, 424B, 424C, 424D, SF–LLL and the name check form have been approved by OMB under the respective control numbers 0328–0043, 0348–0044, 0348–0040, 0348–0041, 0348–0042, 0348–0046 and 0651–0001.

Dated: August 16, 2000.

Gregory W. Withee,

Assistant Administrator for Satellite and Information Services.

[FR Doc. 00–21839 Filed 8–25–00; 8:45 am]

BILLING CODE 3510–HR–P

DEPARTMENT OF DEFENSE

Department of the Air Force

Proposed Collection; Comment Request

AGENCY: Department of the Air Force, DoD.

ACTION: Notice.

In compliance with section 3506(c)(2)(A) of the Paperwork Reduction Act of 1995, the Office of Admissions announces the proposed reinstatement of a public information collection and seeks public comment on the provisions thereof. Comments are invited on: (a) Whether the proposed collection of information is necessary for the proper performance of the functions of the agency, including whether the information shall have practical utility; (b) the accuracy of the agency's estimate of the burden of the proposed information collection; (c) ways to enhance the quality, utility, and clarity of the information to be collected; and (d) ways to minimize the burden of the information collection on respondents, including the use of automated collection techniques or other forms of information technology.

DATES: Consideration will be given to all comments received by October 27, 2000.

ADDRESSES: Written comments and recommendations on the proposed information collection should be sent to United States Air Force Academy, Office of Admissions, 2304 Cadet Drive, Suite 236, USAFA, CO 80840.

FOR FURTHER INFORMATION CONTACT: To request more information on this proposed information collection or to obtain a copy of the proposed and associated collection instruments, please write to the above address, or call the United States Air Force Academy, Office of Admissions, (719) 333–7291.

Title, Associated Form, and OMB Number: Air Force Academy Candidate Activities Record, USAFA Form 147, OMB Number 0701–0063.

Needs and Uses: The information collection requirement is necessary to obtain data on candidate's background and aptitude in determining eligibility and selection to the Air Force Academy.

Affected Public: Individuals or households.

Annual Burden Hours: 5,258.

Number of Respondents: 7,010.

Responses per Respondent: 1.

Average Burden per Response: 45 Minutes.

Frequency: 1.

SUPPLEMENTARY INFORMATION:

Summary of Information Collection

The information collected on this form is required by 10 U.S.C. 9346. The respondents are students who are applying for admission to the United States Air Force Academy. Each student's background and aptitude is reviewed to determine eligibility. If the information on this form is not collected, the individual cannot be considered for admittance to the Air Force Academy.

Janet A. Long,

Air Force Federal Register Liaison Officer.

[FR Doc. 00–21829 Filed 8–25–00; 8:45 am]

BILLING CODE 5001–05–U

DEPARTMENT OF DEFENSE

Department of the Navy

Notice of Availability for the Draft Environmental Assessment for the Proposed Transfer of Naval Ammunition Support Detachment Property, Vieques, Puerto Rico

AGENCY: Department of the Navy, DOD.

ACTION: Notice.

SUMMARY: Pursuant to section 102(2)(C) of the National Environmental Policy Act (NEPA) of 1969 and the Council on Environmental Quality Regulations (40 CFR, Parts 1500–1508) implementing the procedural provisions of NEPA, the United States Department of the Navy (Navy) gives notice that a draft Environmental Assessment (EA) has been prepared to evaluate the environmental impacts associated with the transfer and subsequent redevelopment of the Naval Ammunition Support Detachment (NASD) property on Vieques Island, Puerto Rico. The United States Department of Interior (USDOI) is a cooperating agency in the preparation of this draft EA.

FOR FURTHER INFORMATION CONTACT: Mrs. Ruth Diaz, Community Relations Office, U.S. Naval Forces South, at (787) 865–5691 or write to Commander, U.S. Naval Forces South, Federico Degetau Federal Building, Room 354, 150 Carlos Chardon Avenue, Hato Rey, Puerto Rico 00918.

SUPPLEMENTARY INFORMATION: On January 31, 2000, the President of the United States directed the Navy to submit legislation to Congress to transfer the western end of Vieques to the Commonwealth of Puerto Rico for the benefit of the Municipality of Vieques. This directive was the culmination of a negotiated agreement between the President and the Governor of Puerto Rico concerning the Navy's continued use of the eastern end of Vieques as a training range. Draft legislation was submitted to Congress on February 25, 2000, but as of August 20, 2000, this legislation has not been enacted. The Navy cannot transfer the NASD property to the Commonwealth of Puerto Rico without legislative authority. Although the draft legislation has not been enacted, this draft EA was prepared in anticipation of congressional direction to transfer the NASD property. The analyses contained in this draft EA are based on the legislation as submitted to Congress in February 2000. The legislation, if enacted by Congress, would require the Navy to transfer the land comprising the NASD to the Commonwealth of Puerto Rico by December 31, 2000. This conveyance would not include approximately 100 acres of land on NASD that comprise the Relocatable Over-the-Horizon Radar site, the Monte Pirata telecommunication site, and adjacent areas needed for access and operation of these facilities.

The proposed action is the transfer of approximately 7,900 acres comprising the NASD property to the Commonwealth of Puerto Rico. Of the approximately 7,900 acres, approximately 3,900 acres has been designated in a draft Co-Management Agreement (CMA) developed between the Commonwealth and the USDOI as conservation areas. These conservation areas include the Conservation Zones designated pursuant to the 1983 Memorandum of Understanding between the Commonwealth and the Navy. These conservation areas will be managed pursuant to a Conservation and Management Plan pursuant to the CMA to protect and preserve their natural and cultural resources in

perpetuity for the benefit of the general public.

The draft EA also evaluates the potential indirect environmental impacts of the land conveyance associated with the reuse and development of the non-conservation lands as proposed in a conceptual land use plan developed by the Commonwealth. Following a phased approach, the non-conservation land would be made available for low density residential development, tourism-related commercial and residential development, and mixed use development pursuant to a land use plan prepared by the Puerto Rico Planning Board. Passive recreational uses, such as hiking and biking, would be allowed within the conservation zones, however, no new construction or development would be permitted. Green Beach would be open for public use.

The Navy is currently consulting with the Puerto Rico State Historic Preservation Office (SHPO) regarding compliance of this action with Section 106 of the National Historic Preservation Act. Prior to the transfer, the Navy, USDOI, the Advisory Council on Historic Preservation, and the SHPO will sign a Programmatic Agreement (PA) that assures: (1) Historic properties located within the Conservation Zones as defined in the CMA will be afforded protection pursuant to protection measures within the CMA, (2) all archaeological sites eligible for the National Register of Historic Places, as well as unevaluated sites, that are located on land within the jurisdiction of the Commonwealth will be protected under procedures contained in the PA, and (3) the USDOI will be responsible for consultation with the SHPO for future undertakings in the Conservation Zones defined by the CMA, including development of and modifications to the management plan for those Zones.

There are currently ongoing Comprehensive Environmental Response, Compensation, and Liability Act (CERCLA) studies, investigations, and as necessary, site cleanups that will not be completed prior to the projected completion of the final EA. This draft EA is based on the most currently available data and information, and reasonable assumptions regarding land use and other restrictions, which may be implemented to protect human health and the environment prior to or after completion of site cleanups. The ongoing investigations and remediation of contaminated areas are not subject to consideration within this draft EA since under the CERCLA process, all studies and proposed remedial actions will be fully discussed with the regulators and the public.

The analysis conducted in the draft EA focused on the following resources: land use and aesthetics, soils, water quality, air quality, noise, terrestrial and marine environments, threatened and endangered species, socioeconomics, cultural resources, environmental contamination, and coastal zone management. The Navy's analysis of potential effects of the proposed action is founded on the assumption that Congress would enact the Transfer Legislation substantially as described in the draft EA. Based on the assumptions and the analyses in the draft EA, implementation of the proposed action appears to have no significant impacts on the environment. However, the Navy will incorporate public comments into the final EA before making a decision on the environmental significance of the proposed action. If warranted, a Finding of No Significant Impact (FONSI) will be prepared, and the final EA and FONSI will be made available for public review on or about December 1, 2000.

Written comments on the draft EA are requested not later than September 27, 2000. Comments should be as specific as possible. Comments should be mailed to: Commander, U.S. Naval Forces South, Federico Degetau Federal Building, Room 354, 150 Carlos Chardon Avenue, Hato Rey, Puerto Rico 00918. For additional information, write to the above address or call Mrs. Ruth Diaz, Community Relations Office, U.S. Naval Forces South, at (787) 865–5691.

A limited number of copies of the draft EA, in either English or Spanish, can be obtained by contacting the above address. In addition, copies of the draft EA are available for public review at the following repositories:

Biblioteca Publica Jose Gauthier Benitez, Municipio de Vieques, Calle Carlos Leburn, No. 449, Vieques, Puerto Rico 00765.

Museo Fuerte de Mirasol, Barrio Fuerte, Magnolia No. 471, Vieques, Puerto Rico 00765.

Carnegie Public Library, 7 Ponce de Leon Avenue, San Juan, Puerto Rico 00901–2010.

Bibioteca Publica Municipal Alejandrina Quinonez Rivera, Urbanizcion Rossy Valley No. 816, Calle Francisco Guthier, Cieba, Puerto Rico 00735.

Dated: August 22, 2000.

J.L. Roth,

Lieutenant Commander, Judge Advocate General's Corps, U.S. Navy, Federal Register Liaison Officer.

[FR Doc. 00–21874 Filed 8–25–00; 8:45 am]

BILLING CODE 3810–FF–P

DEPARTMENT OF EDUCATION

Web-Based Education Commission; Hearing

AGENCY: Office of Postsecondary Education, Education.

SUMMARY: This notice announces the next hearing of the Web-based Education Commission. Notice of this hearing is required under Section 10(a)(2) of the Federal Advisory Committee Act. This document is intended to notify the general public of its opportunity to attend this hearing.

DATES: The hearing will be held on September 14–15, 2000. The session on September 14 is scheduled for 1 p.m.–5 p.m. The session on September 15 is scheduled for 8:30 a.m.–12 noon. Both sessions will be held on Capitol Hill, building and room numbers to be announced.

FOR FURTHER INFORMATION CONTACT: David Byer, Executive Director, Web-based Education Commission, U.S. Department of Education, 1990 K Street, NW., Washington, DC 20006–8533. Telephone: (202) 219–7045. Fax: (202) 502–7675. Email: web_commission@ed.gov.

SUPPLEMENTARY INFORMATION: The Web-based Education Commission is authorized by Title VIII, Part J of the Higher Education Amendments of 1998, as amended by the Fiscal 2000 Appropriations Act for the Departments of Labor, Health, and Human Services, and Education, and Related Agencies. The Commission is required to conduct a thorough study to assess the critical pedagogical and policy issues affecting the creation and use of web-based and other technology-mediated content and learning strategies to transform and improve teaching and achievement at the K–12 and postsecondary education levels. The Commission must issue a final report to the President and the Congress, not later than 12 months after the first meeting of the Commission, which occurred November 16–17, 1999. The final report will contain a detailed statement of the Commission's findings and conclusions, as well as recommendations.

The September 14–15 hearings will focus on a number of issues not fully addressed at previous hearings. The September 14 hearing will center on ''The Promise of the Internet: Voices from the Field.'' Issues to be covered include minority populations, disabilities, privacy and protection, research and development, and others. The September 15 hearing will center on ''The Promise of the Internet to Empower Adult Learners.''

The hearing is open to the public. Records are kept of all Commission proceedings and are available for public inspection at the office of the Web-based Education Commission, Room 6131, 1990 K Street, NW, Washington, DC 20006–8533, from the hours of 9 a.m. to 5:30 p.m.

Assistance to Individuals With Disabilities: The hearing site is accessible to individuals with disabilities. Individuals who will need an auxiliary aid or service to participate in the hearing (*e.g.*, interpreting services, assistive listening devices, or materials in alternative format) should contact the person listed in this notice at least two weeks before the scheduled hearing date. We will attempt to meet requests after this date, but cannot guarantee availability of the requested accommodation.

Electronic Access to This Document

You may view this document, as well as all other Department of Education documents published in the **Federal Register**, in text or Adobe Portable Document Format (PDF) on the Internet at either of the following sites:

http://ocfo.ed.gov/fedreg.htm
http://www.ed.gov/news/html

To use the PDF you must have the Adobe Acrobat Reader Program with Search, which is available free at either of the previously mentioned sites. If you have questions about using the PDF, call the U.S. Government Printing Office (GPO), toll free, at 1–888–293–6498; or in the Washington, DC area, at (202) 512–1530.

Note: The official version of this document is the document published in the **Federal Register**. Free Internet access to the official edition of the **Federal Register** and the *Code of Federal Regulations* is available on GPO Access at: *http://www.access.gpo.gov/nara/indes.html.*

Dated: August 21, 2000.

A. Lee Fritschler,

Assistant Secretary, Office of Postsecondary Education.

[FR Doc. 00–21862 Filed 8–25–00; 8:45 am]

BILLING CODE 4000–01–P

DEPARTMENT OF ENERGY

Environmental Management Site-Specific Advisory Board, Idaho

AGENCY: Department of Energy.

ACTION: Notice of Open Meeting.

SUMMARY: This notice announces a meeting of the Environmental Management Site-Specific Advisory Board (EM SSAB), Idaho National Engineering and Environmental Laboratory (INEEL). Federal Advisory Committee Act (Pub. L. No. 92–463, 86 Stat. 770) requires that public notice of these meetings be announced in the **Federal Register**.

DATES: Tuesday, September 19, 2000—8:00 a.m.–6:00 p.m.; Wednesday, September 20, 2000—8:00 a.m.–5:00 p.m.

ADDRESSES: Wort Hotel, 50 North Glenwood, Jackson, WY.

FOR FURTHER INFORMATION CONTACT: Ms. Wendy Lowe, INEEL CAB Facilitator, Jason Associates Corporation, 477 Shoup Avenue, Suite 205, Idaho Falls, ID 83402, (208–522–1662) or visit the Board's Internet homepage at http://www.ida.net/users/cab.

SUPPLEMENTARY INFORMATION:

Purpose of the Board: The purpose of the Board is to make recommendations to DOE and its regulators in the areas of future use, cleanup levels, waste disposition and cleanup priorities at the INEEL.

Tentative Agenda

(Agenda topics may change up to the day of the meeting; please contact Jason Associates for the most current agenda or visit the CAB's Internet site at www.ida.net/users/cab/):

Presentations on the following:

- Closure Plan for High-Level Waste Tanks 182 and 183
- DOE's plans for long-term monitoring of sites after cleanup has been completed
- Environmental monitoring at the INEEL

Briefings on the following:

- Status of the Blue Ribbon Panel
- Status of the Advanced Mixed Waste Treatment Project
- State of Idaho's permit review process for the incinerator at the Waste Experimental Reduction Facility
- Closure Plan for the incinerator at the Waste Experimental Reduction Facility
- Final Environmental Impact Statement for Electro metallurgical Treatment of Sodium-Bonded Spent Nuclear Fuel
- The INEEL Technical Library

Presentation and Recommendation Finalization of the following:

- Long-Term Stewardship Study
- Proposed Plan for Groundwater Remediation at Test Area North
- Draft Programmatic Environmental Impact Statement for Accomplishing Expanded Civilian Nuclear Energy Research and Development and Isotope Production Missions

Reports from CAB members who attended the following meetings:

- Site Specific Advisory Board Chairs meeting
- Transportation External Coordination Working Group meeting
- Blue Ribbon Panel meeting

Public Participation: This meeting is open to the public. Written statements may be filed with the Board facilitator either before or after the meeting. Individuals who wish to make oral presentations pertaining to agenda items should contact the Board Chair at the address or telephone number listed above. Requests must be received 5 days prior to the meeting and reasonable provision will be made to include the presentation in the agenda. The Deputy Designated Federal Officer, Jerry Bowman, Assistant Manager for Laboratory Development, Idaho Operations Office, U.S. Department of Energy, is empowered to conduct the meeting in a fashion that will facilitate the orderly conduct of business. Every individual wishing to make public comment will be provided equal time to present their comments.

Minutes: The minutes of this meeting will be available for public review and copying at the Freedom of Information Public Reading Room, 1E–190, Forrestal Building, 1000 Independence Avenue, SW, Washington, DC 20585 between 9:00 a.m. and 4:00 p.m., Monday–Friday, except Federal holidays. Minutes will also be available by writing to Stanely Hobson, INEEL CAB Chair, 477 Shoup Ave., Suite 205, Idaho Falls, Idaho 83402 or by calling the Board's facilitator at (208) 522–1662.

Issued at Washington, DC on August 23, 2000.

Rachel Samuel,

Deputy Advisory Committee Management Officer.

[FR Doc. 00–21931 Filed 8–25–00; 8:45 am]

BILLING CODE 6450–01–P

DEPARTMENT OF ENERGY

Office of Science; High Energy Physics Advisory Panel

AGENCY: Department of Energy.

ACTION: Notice of open meeting.

SUMMARY: This notice announces a meeting of the High Energy Physics Advisory Panel (HEPAP). Federal Advisory Committee Act (Public Law 92–463, 86 Stat. 770) requires that public notice of these meetings be announced in the **Federal Register**.

DATES: Monday, October 30, 2000; 9:00 a.m. to 6:00 p.m. and Tuesday, October 31, 2000; 8:30 a.m. to 4:00 p.m.

ADDRESSES: Stanford Linear Accelerator Center, 2575 Sand Hill Road, Menlo Park, California 94309.

FOR FURTHER INFORMATION CONTACT: Glen Crawford, Executive Secretary; High Energy Physics Advisory Panel; U.S. Department of Energy; 19901 Germantown Road; Germantown, Maryland 20874–1290; Telephone: 301–903–9458.

SUPPLEMENTARY INFORMATION:

Purpose of Meeting: To provide advice and guidance on a continuing basis with respect to the high energy physics research program.

Tentative Agenda: Agenda will include discussions of the following: Monday, October 30, 2000, and Tuesday, October 31, 2000.

- Discussion of Department of Energy High Energy Physics Programs
- Discussion of National Science Foundation Elementary Particle Physics Program
- Report on Stanford Linear Accelerator Center Programs
- Discussion of High Energy Physics University Programs
- Reports on and Discussion of U.S. Large Hadron Collider Activities
- Reports on and Discussions of Topics of General Interest in High Energy Physics
- Public Comment (10-minute rule)

Public Participation: The meeting is open to the public. If you would like to file a written statement with the Panel, you may do so either before or after the meeting. If you would like to make oral statements regarding any of these items on the agenda, you should contact Glen Crawford, 301–903–9458 or Glen.Crawford@science.doe.gov (e-mail). You must make your request for an oral statement at least 5 business days before the meeting. Reasonable provision will be made to include the scheduled oral statements on the agenda. The Chairperson of the Panel will conduct the meeting to facilitate the orderly conduct of business. Public comment will follow the 10-minute rule.

Minutes: The minutes of the meeting will be available for public review and copying within 30 days at the Freedom of Information Public Reading Room; Room 1E–190; Forrestal Building; 1000 Independence Avenue, SW.; Washington, DC, between 9:00 a.m. and 4:00 p.m., Monday through Friday, except Federal holidays.

Issued at Washington, DC on August 23, 2000.

Rachel M. Samuel,

Deputy Advisory Committee Management Officer.

[FR Doc. 00–21932 Filed 8–25–00; 8:45 am]

BILLING CODE 6450–01–P

DEPARTMENT OF ENERGY

Federal Energy Regulatory Commission

[Docket Nos. RM 98–10–000, et al.]

Regulation of Short-Term Natural Gas Transportation Services, Regulation of Interstate Natural Gas Transportation Services; Notice of Compliance Filing

August 22, 2000.

In the matter of: RM98–10–000, RM98–12–000, RP00–480–000, RP00–473–000, RP00–458–000, RP00–486–000, RP00–469–000, RP00–462–000, RP00–478–000, RP00–498–000, RP00–474–000, RP00–493–000, RP00–492–000, RP00–467–000, RP00–491–000, RP00–488–000, RP00–482–000, RP00–483–000, RP00–470–000, RP00–476–000, RP00–471–000, RP00–485–000, RP00–464–000, RP00–477–000, RP00–468–000, RP00–495–000, RP00–460–000, RP00–479–000, RP00–459–000, RP00–481–000, RP00–490–000, RP00–475–000, RP00–465–000, RP00–487–000, RP00–472–000, RP00–466–000, RP00–497–000, RP00–461–000, RP00–494–000, RP00–463–000, RP00–484–000, RP00–489–000; Alliance Pipeline L.P., Carnegie Interstate Pipeline Co., Clear Creek Storage Company, L.L.C., Cove Point LNG Limited Parnership, East Tennessee Natural Gas Co., Equitrans, L.P., Honeoye Storage Corp., Koch Gateway Pipeline Co., Maritimes & Northeast Pipeline, L.L.C., Midcoast Interstate Transmission, Inc., Mid Louisiana Gas Co., Midwestern Gas Transmission Co., Petal Gas Storage, L.L.C., Portland Natural Gas Transmission System, Reliant Energy Gas Transmission Co., Sabine Pipe Line LLC, Sea Robin Pipeline Co., Southern Natural Gas Co., Southwest Gas Storage Co., Steuben Gas Storage Co., Stingray Pipeline Company, Tennessee Gas Pipeline Co., Texas Eastern Transmission Corp., Texas Gas Transmission Corp., Total Peaking Services, L.L.C., Trailblazer Pipeline Co., TransColorado Gas Transmission Co., Transcontinental Gas Pipe Line Corp., Transwestern Pipeline Co., Trunkline Gas Co., Trunkline LNG Co., Tuscarora Gas Transmission Co., USG Pipeline Co., U–T Offshore System, L.L.C., Viking Gas Transmission Co., West Gas Interstate Company, Williams Gas Pipelines Central, Inc., Williston Basin Interstate Pipeline Co., Wyoming Interstate Co., Ltd., Young Gas Storage Co., Ltd.; Notice of Compliance Filing.

Take notice that on August 15, 2000, and August 16, 2000, the above-referenced pipelines tendered for filing their *pro forma* tariff sheets respectively in compliance with Order Nos. 637 and 637–A.

On February 9 and May 19, 2000 the Commission issued Order Nos. 637 and 637–A, respectively, which prescribed new regulations, implemented new policies and revised certain existing regulations respecting natural gas transportation in interstate commerce. The Commission directed pipelines to file *pro forma* tariff sheets to comply with the new regulatory requirements regarding scheduling procedures, capacity segmentation, imbalance management services and penalty credits, or in the alternative, to explain why no changes to existing tariff provisions are necessary.

Any person desiring to be heard or to protest said filing should file a motion to intervene or a protest with the Federal Energy Regulatory Commission, 888 First Street, N.E., Washington, D.C. 20426, in accordance with Sections 385.214 or 385.211 of the Commission's Rules and Regulations. All such motions or protests must be filed on or before September 14, 2000. Protests will be considered by the Commission in determining the appropriate action to be taken, but will not serve to make protestants parties to the proceedings. Any person wishing to become a party must file a motion to intervene. Copies of this filing are on file with the Commission and are available for public inspection in the Public Reference Room. This filing may be viewed on the web at http://www.ferc.fed.us/online/rims.htm (call 202–208–2222 for assistance).

Linwood A. Watson, Jr.,

Acting Secretary.

[FR Doc. 00–21852 Filed 8–25–00; 8:45 am]

BILLING CODE 6717–01–M

DEPARTMENT OF ENERGY

Federal Energy Regulatory Commission

[Docket No. RP00–226–001]

Mississippi Canyon Gas Pipeline, LLC; Notice of Informal Settlement Conference

August 22, 2000.

On April 26, 2000, the Commission issued an Order Accepting and Suspending Tariff Sheets Subject to Conditions, in Mississippi Canyon Gas Pipeline, LLC, 91 FERC ¶ 61, 087 (2000). On May 4, 2000, Mississippi Canyon Gas Pipeline, LLC (MCGP) filed a response to that order, and on May 24, 2000, BP Exploration and Oil Inc. (BP) and Conoco Inc. (Conoco) filed reply comments. Based on the comments in those filings, the matter was referred to the Commission's Dispute Resolution Service to arrange a possible informal settlement process.

MCGP, BP and Conoco agreed to meet in an informal settlement conference. The conference will be on August 31, 2000 at BP's offices, 501 West Lake Park Boulevard, Houston TX, beginning at 8 a.m.

The interested parties in the above docket are invited to attend the informal settlement conference. If a party has any questions with respect to the conference, please call Kasha Helget, Dispute Resolution Specialist, Federal Energy Regulatory Commission at 202–208–2165, who can also be reached by e-mail at: *kasha.helget@ferc.fed.us.*

Linwood A. Watson, Jr.,

Acting Secretary.

[FR Doc. 00–21876 Filed 8–25–00; 8:45 am]

BILLING CODE 6717–01–M

DEPARTMENT OF ENERGY

Federal Energy Regulatory Commission

[Docket Nos. ER00–3038–003 and EL00–70–004]

New York Independent System Operator, Inc.; Notice of Filing

August 22, 2000.

Take notice that on August 10, 2000, the New York Independent System Operator, Inc. (NYISO), tendered for filing revisions to its Open Access Transmission Tariff (OATT) in compliance with the Federal Energy Regulatory Commission Order in Docket No. ER00–3038–000, *et al.*, on July 26, 2000, 92 FERC ¶ 61,073. Pursuant to the Commission's order, the revisions have an effective date of July 26, 2000.

A copy of this filing was served upon all parties who have executed Service Agreements under the ISO OATT.

Any person desiring to be heard or to protest such filing should file a motion to intervene or protest with the Federal Energy Regulatory Commission, 888 First Street, NE., Washington, DC 20426, in accordance with Rules 211 and 214 of the Commission's Rules of Practice and Procedure (18 CFR 385.211 and 385.214). All such motions and protests should be filed on or before September 1, 2000. Protests will be considered by the Commission to determine the appropriate action to be taken, but will not serve to make protestants parties to the proceedings. Any person wishing to become a party must file a motion to intervene. Copies of this filing are on file with the Commission and are available for public inspection. This filing may also be viewed on the Internet at http://www.ferc.fed.us/online/rims.htm (call 202–208–2222 for assistance).

Linwood A. Watson, Jr.,

Acting Secretary.

[FR Doc. 00–21850 Filed 8–25–00; 8:45 am]

BILLING CODE 6717–01–M

DEPARTMENT OF ENERGY

Federal Energy Regulatory Commission

[Docket Nos. ER00–845–000, ER00–851–000, ER00–860–000]

Southern California Edison Company, Pacific Gas and Electric Company, San Diego Gas and Electric Company; Notice of Informal Settlement Conference

August 22, 2000.

Take notice that an informal settlement conference will be convened in this proceeding on Thursday, August 24, 2000, at 1:30 p.m., Eastern Standard Time, at the offices of the Federal Energy Regulatory Commission, 888 First Street, NE., Washington, DC, for the purpose of exploring the possible settlement of the issues remaining in Docket No. ER00–845–000.

Any party, as defined by 18 CFR 385.102(c), or any participant as defined by 18 CFR 385.102(b), is invited to attend. A toll-free call-in number will be made available for parties who want to participate by telephone.

For additional information, contact Edith Gilmore at (202) 208–2158 or Diane B. Schratwieser at (202) 208–1176.

Linwood A. Watson, Jr.,

Acting Secretary.

[FR Doc. 00–21849 Filed 8–25–00; 8:45 am]

BILLING CODE 6717–01–M

DEPARTMENT OF ENERGY

Federal Energy Regulatory Commission

[Docket No. CP00–441–000]

Tennessee Gas Pipeline Company; Notice of Request Under Blanket Authorization

August 22, 2000.

Take notice that on August 16, 2000, Tennessee Gas Pipeline Company (Tennessee), a Delaware Corporation, Post Office Box 2511, Houston, Texas 77252–2511, filed a request with the Commission in Docket No. CP00–441–000, pursuant to Section 157.205 and 157.208(b)(2) of the Commission's Regulations under the Natural Gas Act (NGA) for authorization to construct, own, install and operate an offshore supply lateral, the Texas Deepwater Link Project, consisting of approximately 17.8 miles of 20-inch diameter pipeline to connect Tennessee's existing offshore system to the High Island Offshore System, L.L.C. (HIOS) authorized in blanket certificate issued in Docket No. CP82–413–000, all as more fully set forth in the request on file with the Commission and open to public inspection. This filing may be viewed on the web at http://www.ferc.fed.us/online/rims.htm (call 202–208–2222 for assistance).

Tennessee proposes to construct, own, install and operate facilities necessary to receive and transport natural gas produced in the offshore Gulf of Mexico. The lateral line would originate from Tennessee's Line 507K–200 in West Cameron Block 180 offshore Louisiana and extend to an interconnection with the HIOS system at HIOS in West Cameron Block 167. The facilities would have the capability to transport 700 MMcf of natural gas per day at a maximum allowable operating pressure of 1,440 psig. Tennessee estimates that the cost of constructing the subject facilities would be $14,485,000.

Any questions regarding the application may be directed to Wendell B. Hunt, Attorney at (713) 420–5628 or Thomas G. Joyce, Certificates Manager at (713) 420–2459.

Any person or the Commission's staff may, within 45 days after the Commission has issued this notice, file pursuant to Rule 214 of the Commission's Procedural Rules (18 CFR 385.214) a motion to intervene or notice of intervention and pursuant to Section 157.205 of the Regulations under the NGA (18 CFR 157.205) a protest to the request. If no protest is filed within the allowed time, the proposed activity shall be deemed to be authorized effective the day after the time allowed for filing a protest. If a protest is filed and not withdrawn within 30 days after the time allowed for filing a protest, the instant request shall be treated as an

application for authorization pursuant to Section 7 of the NGA.

Linwood A. Watson, Jr.,

Acting Secretary.

[FR Doc. 00–21851 Filed 8–25–00; 8:45 am]

BILLING CODE 6717–01–M

DEPARTMENT OF ENERGY

Federal Energy Regulatory Commission

[Docket No. ER93–540–010, *et al.*]

American Electric Power Service Corporation., et al.; Electric Rate and Corporate Regulation Filings

August 22, 2000.

Take notice that the following filings have been made with the Commission:

1. American Electric Power Service Corporation

[Docket No. ER93–540–010]

Take notice that on August 17, 2000, American Electric Power Service Corporation, on behalf of the operating companies of the America Electric Power System (collectively AEP), tendered for filing a refund report in compliance with the Commission's order in American Electric Power Service Corporation, 92 FERC ¶ 61,001 (2000).

Comment date: September 7, 2000, in accordance with Standard Paragraph E at the end of this notice.

2. The United Illuminating Company, Complainant, v. ISO New England Inc., Respondent

[Docket No. EL00–100–000]

Take notice that on August 18, 2000, The United Illuminating Company (UI), tendered for filing a Complaint in which UI petitions the Commission for an order directing ISO New England Inc. (ISO–NE) to disregard the $6,000/MWh bids received for hours 14 through 17 and the $2,870/MWh bid received for hour 13 on May 8, 2000, in setting the New England Energy Market clearing price for those hours. UI also petitions the Commission for an order directing ISO–NE to mitigate the actual bid prices by substituting the seller's actual marginal cost for the $6,000/MWh and $2,870/MWh bids.

Comment Date: September 7, 2000, in accordance with Standard Paragraph E at the end of this notice. Answers to the complaint shall also be due on or before September 7, 2000.

3. New Horizon Electric Cooperative, Inc. v. Duke Electric Transmission, a Division of Duke Power Company

[Docket No. EL00–101–000]

Take notice that on August 18, 2000, New Horizon Electric Cooperative (NHEC), on behalf of Saluda River Electric Cooperative, Inc. and its five member systems, tendered for filing a complaint against Duke Electric Transmission, a division of Duke Power Company (Duke or Duke ET), requesting fast track processing. NHEC seeks to resolve certain disputes regarding the terms and conditions for long-term network transmission service under Duke ET's Open Access Transmission Service Tariff. Specifically, NHEC requests a ruling by the Commission on the following issues: (1) the applicability of Duke ET's Schedule 4 Energy Imbalance Service to NHEC once NHEC has implemented dynamic scheduling to electronically transfer its load from Duke ET's control area to a neighboring control area, beginning January 1, 2001; (2) filing requirements with respect to Duke ET's Facility Connection Requirements and Power Factor Penalty documents; (3) comparable application of the Facility Connection Requirements and Power Factor Penalty to Duke Power's use of the Duke ET transmission grid; and (4) the appropriate calculation of charges for Schedule 3 Regulation and Frequency Response Service when applicable to NHEC. NHEC requests that the Commission bifurcate its consideration of the Energy Imbalance Service issue and grant NHEC's requested relief on this dispute before January 1, 2001.

Comment date: September 7, 2000, in accordance with Standard Paragraph E at the end of this notice. Answers to the complaint shall also be due on or before September 7, 2000.

4. NUSCO Connecticut Light & Power Company

[Docket No. ER99–3196–001]

Take notice that on August 17, 2000, Northeast Utilities Service Company (NUSCO), and the Massachusetts Attorney General (MassAG), jointly tendered for filing notification that the Massachusetts Department of Telecommunications and Energy (MassDTE), approved the Settlement Agreement on August 4, 2000 in the above-referenced proceeding.

Comment date: September 7, 2000, in accordance with Standard Paragraph E at the end of this notice.

5. Midwest Generation, LLC

[Docket No. ER00–3424–000]

Take notice that on August 16, 2000, Midwest Generation, LLC tendered for filing under its market-based rate tariff a long-term service agreement with Edison Mission Marketing & Trading, Inc.

The effective date of the agreement is August 1, 2000.

Comment date: September 6, 2000, in accordance with Standard Paragraph E at the end of this notice.

6. Dynegy Power Marketing, Inc.

[Docket No. ER00–3429–000]

Take notice that on August 17, 2000, Dynegy Power Marketing, Inc. (Dynegy), tendered for filing its Fourth Revised Electric Rate Schedule FERC No. 1. The revised Rate Schedule updates and expands Dynegy's Rate Schedule FERC No. 1 to provide for the wholesale sales of ancillary services at market based rates to customers within (i) the New England Power Pool, (ii) the New York Power Pool, and (iii) the Pennsylvania-New Jersey-Maryland Interconnection. The revised Rate Schedule also makes other minor changes.

Dynegy requests that the notice requirements set forth in Section 35.3(a) of the Commission's Regulations be waived to the extent required to allow the revised Rate Schedule to become effective as of August 18, 2000.

Comment date: September 7, 2000, in accordance with Standard Paragraph E at the end of this notice.

7. Duke Energy Corporation

[Docket No. ER00–3430–000]

Take notice that on August 17, 2000, Duke Energy Corporation (Duke), tendered for filing a Service Agreement with NRG Power Marketing Inc., for Transmission Service under Duke's Open Access Transmission Tariff.

Duke requests that the proposed Service Agreement be permitted to become effective on August 9, 2000.

Duke states that this filing is in accordance with Part 35 of the Commission's Regulations and a copy has been served on the North Carolina Utilities Commission.

Comment date: September 7, 2000, in accordance with Standard Paragraph E at the end of this notice.

8. Duke Energy Corporation

[Docket No. ER00–3431–000]

Take notice that on August 17, 2000, Duke Energy Corporation (Duke), tendered for filing a Service Agreement with NRG Power Marketing Inc., for Non-Transmission Service under Duke's Open Access Transmission Tariff.

Duke requests that the proposed Service Agreement be permitted to become effective on August 9, 2000.

Duke states that this filing is in accordance with Part 35 of the Commission's Regulations and a copy has been served on the North Carolina Utilities Commission.

Comment date: September 7, 2000, in accordance with Standard Paragraph E at the end of this notice.

9. Rockingham Power, L.L.C.

[Docket No. ER00–3433–000]

Take notice that on August 17, 2000, Rockingham Power, L.L.C., tendered for filing a long-term power sales agreement between Rockingham Power, L.L.C. and Duke Power, a Division of Duke Energy Corporation, pursuant to the Commission's August 3, 2000, letter order in the above proceeding.

Comment date: September 7, 2000, in accordance with Standard Paragraph E at the end of this notice.

10. Commonwealth Edison Company, Commonwealth Edison Company of Indiana

[Docket No. ER00–3434–000]

Take notice that on August 17, 2000, Commonwealth Edison Company and Commonwealth Edison Company of Indiana (collectively ComEd), tendered for filing filed to amend ComEd's Open Access Transmission Tariff (OATT) to offer Generator Imbalance Service to transmission customers who receive the output of generators located in the ComEd control area and submit schedules for transmission service under the OATT for that generation, where the generator is not otherwise covered under another agreement.

ComEd requests an effective date of November 1, 2000. Copies of the filing were served upon ComEd's jurisdictional customers and interested state commissions.

Comment date: September 7, 2000, in accordance with Standard Paragraph E at the end of this notice.

11. Carolina Power & Light Company

[Docket No. ER00–3435–000]

Take notice that Carolina Power & Light Company (CP&L) on August 17, 2000, tendered for filing a proposed Attachment M to its Open Access Transmission Tariff that prescribes the procedures that CP&L will employ with respect to requests to interconnect new generators with the CP&L system or to increase the capacity of generators that are already interconnected with the system.

CP&L requests that the Commission waive its notice requirements to allow the procedures to become effective on August 17, 2000.

Copies of the filing were served upon the public utility's jurisdictional customers, North Carolina Utilities Commission and South Carolina Public Service Commission. CP&L has also posted the procedures on its OASIS.

Comment date: September 7, 2000, in accordance with Standard Paragraph E at the end of this notice.

12. Allegheny Energy Service Corporation on behalf of Allegheny Energy Supply Company, LLC

[Docket No. ER00–3436–000]

Take notice that on August 17, 2000, Allegheny Energy Service Corporation on behalf of Allegheny Energy Supply Company, LLC (Allegheny Energy Supply), tendered for filing First Revised Service Agreement No. 39 under the Market Rate Tariff to incorporate a Netting Agreement with Coral Power, L.L.C., into the tariff provisions. Allegheny Energy Supply requests a waiver of notice requirements to make the Netting Agreement effective as of August 16, 2000 or such other date as ordered by the Commission.

Copies of the filing have been provided to the Public Utilities Commission of Ohio, the Pennsylvania Public Utility Commission, the Maryland Public Service Commission, the Virginia State Corporation Commission, the West Virginia Public Service Commission, and all parties of record.

Comment date: September 7, 2000, in accordance with Standard Paragraph E at the end of this notice.

13. Electric Energy, Inc.

[Docket No. ES00–36–002]

Take notice that on August 18, 2000, Electric Energy, Inc. submitted an amendment pursuant to Section 204 of the Federal Power Act seeking a waiver of the Commission's competitive bidding and negotiated placement requirements in 18 CFR 34.2.

Comment date: September 12, 2000, in accordance with Standard Paragraph E at the end of this notice.

14. Ameren Energy Generating Company

[Docket No. ES00–40–001]

Take notice that on August 18, 2000, Ameren Energy Generating Company submitted an amendment pursuant to Section 204 of the Federal Power Act seeking a waiver of the Commission's competitive bidding and negotiated placement requirements in 18 CFR 34.2.

Comment date: September 12, 2000, in accordance with Standard Paragraph E at the end of this notice.

15. Platte-Clay Electric Cooperative, Inc.

[Docket No. ES00–50–000]

Take notice that on August 17, 2000, Platte-Clay Electric Cooperative, Inc. (Platte-Clay), filed an application under Section 204 of the Federal Power Act seeking authorization to make long-term borrowings pursuant to a loan agreement with the National Rural Utilities Cooperative Finance Corporation in an amount not to exceed $75 million.

Platte-Clay also requests a waiver of the Commission's competitive bidding and negotiated placement requirements in 18 CFR 34.2.

Comment date: September 12, 2000, in accordance with Standard Paragraph E at the end of this notice.

16. Tosco Corporation Complainant v. SFPP, L.P., Respondent

[Docket No. OR00–9–000]

Take notice that on August 21, 2000, pursuant to Rule 206 of the Commission's Rules of Practice and Procedure (18 CFR 385.206) and the Procedural Rules Applicable to Oil Pipeline Procedures (18 CFR 343.1(a)), Tosco Corporation (Tosco) tendered for filing a Complaint in the captioned proceeding. Tosco alleges that SFPP, L.P. (SFPP), has violated and continues to violate the Interstate Commerce Act, 49 U.S.C. App. § 1 *et seq.*, by charging unjust and unreasonable rates for all of SFPP's jurisdictional interstate services associated with its East, West, North, and Oregon Lines as more fully set forth in the Complaint.

Tosco requests that the Commission: (1) Examine SFPP's challenged rates and charges for all its jurisdictional interstate services and declare that such rates and charges are unjust and unreasonable; (2) order refunds and/or reparations to Tosco, including appropriate interest thereon, for the applicable refund and/or reparation periods to the extent the Commission finds that such rates and charges are unlawful; (3) determine just, reasonable, and nondiscriminatory rates for all of SFPP's jurisdictional interstate services; (4) award Tosco reasonable attorneys' fees and costs; and (5) order such other relief as may be appropriate.

Tosco states that it has served the Complaint on SFPP. Pursuant to Rule 343.4 of the Commission's Procedural Rules Applicable to Oil Pipeline Proceedings, SFPP's response to this Complaint is due within 30 days of the filing of the Complaint.

Comment date: September 11, 2000, in accordance with Standard Paragraph E at the end of this notice. Answers to

the complaint shall also be due on or before September 11, 2000.

Standard Paragraphs

E. Any person desiring to be heard or to protest such filing should file a motion to intervene or protest with the Federal Energy Regulatory Commission, 888 First Street, NE., Washington, DC 20426, in accordance with Rules 211 and 214 of the Commission's Rules of Practice and Procedure (18 CFR 385.211 and 385.214). All such motions or protests should be filed on or before the comment date. Protests will be considered by the Commission in determining the appropriate action to be taken, but will not serve to make protestants parties to the proceeding. Any person wishing to become a party must file a motion to intervene. Copies of these filings are on file with the Commission and are available for public inspection. This filing may also be viewed on the Internet at http://www.ferc.fed.us/ online/rims.htm (call 202–208–2222 for assistance).

Linwood A. Watson, Jr.,

Acting Secretary.

[FR Doc. 00–21848 Filed 8–25–00; 8:45 am]

BILLING CODE 6717–01–P

ENVIRONMENTAL PROTECTION AGENCY

[FRL–6859–1]

Agency Information Collection Activities: Submission for OMB Review; Comment Request, Information Requirements for Importation of Nonconforming Vehicles

AGENCY: Environmental Protection Agency (EPA).

ACTION: Notice.

SUMMARY: In compliance with the Paperwork Reduction Act (44 U.S.C. 3501 *et seq.*), this document announces that the following Information Collection Request (ICR) has been forwarded to the Office of Management and Budget (OMB) for review and approval: Information Requirements for Importation of Nonconforming Vehicles, OMB Control Number 2060–0095, expiration date 11/30/2000. The ICR describes the nature of the information collection and expected burden and cost; where appropriate, it includes the actual data collection instrument.

DATES: Comments must be submitted on or before September 27, 2000.

ADDRESSES: Send comments, referencing EPA ICR No. 0010.09 and OMB Control No. 2060–0095, to the following addresses: Sandy Farmer, U.S. Environmental Protection Agency, Collection Strategies Division (Mail Code 2822), 1200 Pennsylvania Avenue, N.W., Washington, DC 20460; and to Office of Information and Regulatory Affairs, Office of Management and Budget (OMB), Attention: Desk Officer for EPA, 725 17th Street, N.W., Washington, DC 20503.

FOR FURTHER INFORMATION CONTACT: For a copy of the ICR contact Sandy Farmer at EPA by phone at (202) 260–2740, by E-Mail at Farmer.Sandy@epamail.epa.gov or download off the Internet at *http://www.epa.gov/icr* and refer to EPA ICR No. 0010.09. For technical questions about the ICR contact Leonard Lazarus at 202–564–9281.

SUPPLEMENTARY INFORMATION:

Title: Information Requirements for Importation of Nonconforming Vehicles, OMB Control Number 2060–0095, EPA ICR Number 0010.09 expiration date 11/30/2000; This is a request for extension of a currently approved collection.

Abstract: Individuals and businesses importing on and off-road motor vehicles or motor vehicle engines report and keep records of vehicle importations, request prior approval for vehicle importations, or request final admission for vehicles conditionally imported into the U.S. The collection of this information is mandatory in order to ensure compliance of nonconforming vehicles with Federal emissions requirements. Joint EPA and Customs regulations at 40 CFR 85.1501 *et seq.*, and 19 CFR 12.73 and 12.74 promulgated under the authority of Clean Air Act Sections 203 and 208 give authority for the collection of information. The information is used by program personnel to ensure that all Federal emission requirements concerning imported nonconforming motor vehicles are met. Any information submitted to the Agency for which a claim of confidentiality is made is safeguarded according to policies set forth in Title 40, Chapter 1, part 2, subpart B—Confidentiality of Business Information (see CFR part 2), and the public is not permitted access to information containing personal or organizational identifiers. An agency may not conduct or sponsor, and a person is not required to respond to, a collection of information unless it displays a currently valid OMB control number. The OMB control numbers for EPA's regulations are listed in 40 CFR part 9 and 48 CFR Chapter 15. The **Federal Register** document required under 5 CFR 1320.8(d), soliciting comments on this collection of information was published on 5/1/00 (65 FR 25324); no comments were received.

Burden Statement: The annual public reporting and recordkeeping burden for this collection of information is estimated to average 0.7 hours per response. Burden means the total time, effort, or financial resources expended by persons to generate, maintain, retain, or disclose or provide information to or for a Federal agency. This includes the time needed to review instructions; develop, acquire, install, and utilize technology and systems for the purposes of collecting, validating, and verifying information, processing and maintaining information, and disclosing and providing information; adjust the existing ways to comply with any previously applicable instructions and requirements; train personnel to be able to respond to a collection of information; search data sources; complete and review the collection of information; and transmit or otherwise disclose the information.

Respondents/Affected entities: Individuals and businesses importing motor vehicles and motor vehicle engines.

Estimated Number of Respondents: 13,000.

Frequency of Response: 1.6 responses/year.

Estimated Total Annual Hour Burden: 14,400.

Estimated Total Annualized Capital, O&M Cost Burden: $1,296,000.

Send comments on the Agency's need for this information, the accuracy of the provided burden estimates, and any suggested methods for minimizing respondent burden, including through the use of automated collection techniques to the following addresses. Please refer to EPA ICR No. 0010.09 and OMB Control No. 2060–0095 in any correspondence.

Dated: August 21, 2000.

Oscar Morales,

Director, Collection Strategies Division.

[FR Doc. 00–21918 Filed 8–25–00; 8:45 am]

BILLING CODE 6560–50–P

ENVIRONMENTAL PROTECTION AGENCY

[FRL–6858–4]

Solicitation Notice for National Performance Track Program

AGENCY: Environmental Protection Agency (EPA).

ACTION: Solicitation notice.

SUMMARY: This document solicits cooperative agreement proposals from state environmental agencies to support the on-going work of states and establishment of programs to recognize facilities whose environmental performance exceeds minimal compliance. The Environmental Protection Agency (EPA) is prepared to assist state programs that assess and monitor the performance of facilities within the individual state. Where states have an existing program, this cooperative agreement will serve as a vehicle to enhance those programs. Where states have no existing program but plan to develop one this cooperative agreement will serve as seed money for program development. In particular, EPA seeks to support state efforts to: evaluate the impact of the national program on State policies, rules, and regulations; evaluate program implementation and effectiveness; and analyze and disseminate performance data.

DATES: Original proposals and one copy must be mailed to EPA and postmarked no later than September 11, 2000. EPA expects to announce the awards by October 1, 2000.

ADDRESSES: An original and one copy of the proposal should be mailed to EPA headquarters in Washington, DC at the following address: Julie C. Taitt, Administration and Budget Management Team, U.S. EPA, Office of Policy, Economics, and Innovation, 1200 Pennsylvania Avenue, N.W. (MC 1803), Washington, DC 20460; telephone (202) 260–9230.

FOR FURTHER INFORMATION CONTACT: For technical assistance in preparation of your proposals, please contact Dan Fiorino at (202) 260–2749, Chuck Kent at (202) 260–2462 or Ken Munis at (202) 260–9560. For administrative assistance in preparation of your proposals, please contact Julie Taitt at (202) 260–9230.

Environmental Protection Agency

Solicitation Notice: National Performance Track Program

Contents

Section I Background
Section II Eligible Applicants and Activities
Section III Funding
Section IV Requirements for Proposals
Section V Evaluation and Award Criteria
Section VI Proposals
Section VII Recipient Responsibilities
Section VIII Other Information
Section IX How To Apply
Section X Program Contacts

Section I—Background

A. Background

This document solicits cooperative agreement proposals from state environmental agencies to support the on-going work of states and establishment of programs to recognize facilities whose environmental performance exceeds minimal compliance. The Environmental Protection Agency (EPA) is prepared to assist state programs that assess and monitor the performance of facilities within the individual state. Where states have an existing program, this cooperative agreement will serve as a vehicle to enhance those programs. Where states have no existing program but plan to develop one this cooperative agreement will serve as seed money for program development. In particular, EPA seeks to support state efforts to: (1) evaluate the impact of the national program on State policies, rules, and regulations, (2) evaluate program implementation and effectiveness; and (3) analyze and disseminate performance data.

This solicitation notice contains all the information necessary to prepare a proposal. EPA Administrator, Carol Browner announced this program on June 26, 2000. The Environmental Protection Agency is offering financial support for state programs which recognize and encourage facilities that achieve better environmental performance than is required under existing regulations. EPA operates a National Performance Track Program at the Federal level as well. Because EPA expects to be ''substantially involved'' in the activities receiving financial assistance under this Notice of Funding Availability, the Agency has determined that a cooperative agreement is the appropriate funding instrument. EPA anticipates funding of approximately $700,000 for this program, subject to appropriations and the availability of funds. These cooperative agreements require no matching funds.

B. Environmental Performance Track Program

EPA's National Environmental Performance Track program is designed to recognize and encourage top environmental performers—these who go beyond compliance with regulatory requirements to attain levels of environmental performance and management that benefit people, communities, and the environment—at the Federal level. The Agency is offering financial assistance to states to help carry out similar efforts at the state level by our ''co-regulator'' colleagues.

Our system of environmental protection continues to evolve. There is a growing recognition that government should complement existing programs with new tools and strategies that not only protect people and the environment, but also capture opportunities for reducing costs and spurring technological innovation.

Over the last several years, EPA has joined states, businesses, and community and environmental groups in experimenting with new approaches that achieve high levels of environmental protection with greater efficiency. Likewise, many states have developed innovative programs for improving environmental performance.

This Notice of Funds Availability builds upon the lessons EPA has learned from several state leadership programs and from its own efforts. We have learned that innovations in environmental management can be used to create strategic business opportunities and advantages while maximizing the health and productivity of our ecosystems and communities. We have learned the importance of keeping innovation programs simple and their transaction costs low. We know that we must focus on performance, not just the means of achieving it, and derive measurable results.

EPA's National Environmental Performance Track program will recognize innovation, motivate others to improve, and complement existing regulatory activities. It also emphasized the importance of effective state/EPA partnerships and the need to inform and involve citizens and communities. Throughout the development of its National Environmental Performance Track program, EPA has consulted closely with state officials, including a national forum to discuss state programs, issues, and participation. These consultations indicated that states could make effective use of relatively small amounts of EPA financial assistance.

C. Due Date and Award Schedule

An original proposal signed by an authorized representative of the state, plus one copy must be mailed to EPA postmarked no later than September 11, 2000. This is not a competitive program, therefore all viable proposals received from states by the postmarked dates will be reviewed and considered for award. EPA expects to announce the awards by October 1, 2000. Applicants should anticipate project start dates beginning October 2000.

D. Funding Limits Per Proposal

The total funding for this program is approximately $700,000. If all fifty (50) states, and the District of Columbia apply for assistance the total amount of funding potentially available to each state is approximately $14,000. This amount of funding is contingent upon a number of factors, such as whether the state has an existing program to identify high environmental performers or whether a state anticipates a large number of facilities that will apply to become a part of the program, or whether there is no existing state program but one will be initiated. The specific funding scenarios are fully described in Section III, Funding.

Section II—Eligible Applicants and Activities

E. Eligible Applicants

Entities eligible to receive funding from the Environmental Protection Agency under this proposed program are the fifty (50) states of the United States of America and the District of Columbia. States are invited to participate regardless of their previous level of experience with evaluating, assessing, and recognizing facilities with higher than minimal environmental performance.

F. Multiple or Repeat Proposals

It is not necessary for any eligible state entity to provide multiple or repeat proposals. No state will be awarded more than one cooperative agreement for the same project during the same fiscal year. The one cooperative agreement that is awarded will encompass all the programmatic activities and elements. EPA does not generally sustain projects beyond the initial award period.

G. Eligible Activities

This program is geared toward providing money to advance and enhance existing state environmental performance track programs, support new state environmental performance track program efforts, increase knowledge about the effectiveness of performance based programs. Activities to be funded in this solicitation include:

1. Studies and investigations of state environmental policies, rules, and regulations affected by incentives proposed in the Performance Track program. This task will involve analysis and coordination of state ''co-regulation'' efforts in light of the proposed consolidated rulemaking put forward by the US EPA, and identification of all state policies, rules, and regulations which may need to be revised to make them consistent with the proposed changes at the national level.

2. Evaluation of existing state performance track programs. Program evaluation involves verifying that the goals of voluntary performance track programs have been achieved. The goals of state performance track programs may include:

- Public recognition of facilities that have been chosen to participate;
- Continuous improvement in environmental performance by participating facilities, including achievement of performance targets set by the participants for themselves;
- Effective use of program incentives by participants;
- Motivation of participating facilities to improve environmental performance; and
- Reduction of the environmental impact of participating facilities.

Evaluation also may include assessment of participants' Environmental Management Systems, performance tracking systems, public outreach, or other program elements.

The evaluation process will require occasional travel for on-sites to the facilities chosen for this review. Travel costs incurred by state employees can be reimbursed under this cooperative agreement to the extent allowable under Office of Management and Budget (OMB) Circular A–87.

EPA plans to hold training covering key components of the National Environmental Performance Track (*e.g.*, Environmental Management Systems, pollution prevention, performance measurement). This training may be appropriate for State representative participation. Travel costs incurred by state employees participating in this training can be reimbursed to the extent allowable under OMB Circular A–87.

3. Analysis and dissemination of performance data. States will collect environmental performance data published by program participants for the purpose of assessing program impact, and for aggregating and sharing data, where appropriate, with the public. These data can be used for public education on the environmental improvement measured as a result of this program, as well as sharing performance information with other potential candidates for the state's program.

H. EPA's Anticipated Substantial Involvement

EPA anticipates that it will be substantially involved with state recipients in the following four aspects of their work:

1. EPA is reviewing federal regulations and policies and will propose changes that implement the incentives outlined in the National Environmental Performance Track program description. EPA will hold discussions with states to explain these changes.

2. EPA will share with states EPA's experience with federal voluntary programs. EPA will also communicate with states regarding the implementation status of the National Environmental Performance Track program on an ongoing basis.

3. EPA will exchange program information with states that have existing performance track-type programs or programs under development. EPA will work with states to analyze the similarities and differences between the federal and state programs and ultimately to develop a worksheet that states and industry can use in determining appropriate program participation by specific facilities or companies.

4. EPA will make available to state employees training on aspects of the National Environmental Performance Track, including environmental management systems.

EPA's involvement in these aspects is intended primarily to facilitate state work under the tasks indicated in their work plans, but also to increase information-sharing and consistency among co-regulators.

I. Ineligible Activities

All proposals must focus on activities that are state initiated, and that advance state goals (*e.g.*, furthering the state environmental performance track program). All training must be for the purpose of allowing and facilitating the states to better execute their responsibilities. All analysis and data collected by the states as a part of this cooperative agreement must be primarily for the purpose of providing information on state facilities and their environmental performance under the state's program.

EPA cooperative agreement funds must not be used for:

1. Revising State policies, rules, and regulations solely to implement the National Environmental Performance Track

2. Establishing ''membership'' in the National Environmental Performance Track

3. Conduct compliance screening for National Environmental Performance Track applicants.

4. Any activity that is unallowable under OMB Circular A–87.

Section III—Funding

J. Funding

EPA has approximately $700,000 to support this Notice of Funds Availability. This is not a competitive selection process and EPA plans to support all state proposals that meet the criteria for funding. Although the amount of money available is fixed, it is uncertain how many states will apply for funding, therefore the actual award amounts are not known. If all 50 states plus the District of Columbia applied for funding and were accepted, each cooperative agreement would be for approximately $14,000. However, EPA does not expect all 50 states to apply for funding in response to this Notice.

Proposals may ask for an award up to a total of $20,000. For this level of funding, the proposal is expected to address each of the three eligible tasks (discussed in detail above):

1. Studies and investigations of state policies, rules and regulations affected by incentives proposed in the National Environmental Performance Track Program.
2. Evaluation of performance track programs that recognize and reward top environmental performers.
3. Analysis and dissemination of performance data.

For States that choose not to addresses each task, proposals may focus on a single activity at a $12,000 expected level of funding or two tasks at an expected funding level of $15,000.

Section IV—Requirements for Proposals

K. Requirements for Proposals

The anticipated dollar value of each cooperative agreement to a particular state is expected to be under $100,000 so the EPA ''small grant'' procedures may be followed. The Environmental Protection Agency Application Kit for Federal Assistance (pg. 15) outlines requirements for proposals which are listed below. Cooperative Agreement proposals must include:

- Application for Federal Assistance (SF 424) with original signatures including:
  - —SF–424A, budget by categories and indirect cost rate
  - —SF 424B, Assurances for non-construction programs
- Number of Copies: Original and 1 copy
- Debarment and Suspension Certification
- EPA Form 4700–4 Pre-Award Compliance Review Report
- Abbreviated Work Plan and Resume:

The narrative work plan should not exceed five (5) pages in length. The work plan must include a summary of specific objectives, expected outcomes and deliverables; and discussion of the budget and how the budget relates to the objectives. Provide an overview of your project that explains the concept and your goals and objectives. List the types of activities for which EPA funds will be spent. Under project evaluation explain how you will ensure the goals and objectives are met. Evaluation plans may be quantitative and/or qualitative and may include, for example, surveys, observation, or outside consultation. (See section VI). Resumes of the applicants and/or individuals performing this grant should not exceed an additional two (2) pages.

- Key Contact List
- Application Receipt Letter, with your address filled in.

L. Submission Requirements and Copies

''One page'' refers to one side of a single spaced typed page. The pages must be letter sized (8½ × 11 inches) with margins at least an inch wide and with normal type size (10 or 12 point) rather than extremely small type. To conserve paper, please provide double-sided copies of the proposal. Do not include other attachments such as cover letters, tables of contents, or appendices other than resumes and letters of commitment. The SF–424 should be the first page of your proposal and must be signed by a person authorized to receive funds. Blue ink for signatures is preferred. Proposals must be reproducible; they should not be bound. They should be stapled or clipped once in the upper left hand corner, on white paper, and with page numbers. Mailing addresses are listed at the end of this document.

Section V—Evaluation and Award Criteria

M. Evaluation and Award Criteria

Proposals will be reviewed and assessed based on their articulation of the criteria defined in Sections IV and V of this solicitation. In addition the Agency will consider:

1. Previous efforts completed or underway that are consistent with the goals of the National Environmental Performance Track, and
2. Proposed state efforts in support of the goals of the National Performance Track.

This is purely a voluntary program, with an anticipation that all 50 states, and the District of Columbia could provide proposals. To that extent there is no competition in the usual sense. Any and all states that provide a proposal will be considered for an award. The amount of the award will be contingent on the number of tasks included in the proposal (as previously described).

N. Award Process

All proposals submitted by states will be evaluated by an EPA panel consisting of technical, legal, and administrative personnel substantially involved with the National Performance Track Program. States may be asked to modify proposals as a result of this review. As mentioned previously, it is the intention to award cooperative agreement funding to any state that submits a viable proposal that meets the requirements of this NOFA.

Section VI—Proposals

O. Work Plans

All work plans must adhere to the ''small grant'' limit of five pages. EPA will accept these short proposals and negotiate specific work plans after the award is made. Please assure that proposals are complete and contain sufficient detail to facilitate panel review and consideration.

Section VII—Recipient Responsibilities

All projects must be performed by the applicant or by a person satisfactory to the applicant and EPA, and whose qualifications have been reviewed and approved by EPA. All proposals must identify any person other than the applicant who will assist in carrying out the project. The state remains responsible for ensuring that all cooperative agreement conditions are satisfied, and for the successful completion of the project.

Recipients may begin incurring costs on the start date identified in the EPA award agreement. Activities must be completed and funds spent within the time frames specified in the award agreement.

Specific reporting requirements will be identified in the EPA award agreement. Recipients will be required to submit semi-annual progress reports. Cooperative agreement recipients will submit two copies of their final report and two copies of all work products to the EPA Project Officer within ninety (90) days after the expiration of the budget period. This report will be accepted as the final report provided it is complete.

Section VIII—Other Information

The Office of Management and Budget (OMB) has approved the information collection requirements contained in this solicitation under the provisions of the Paperwork Reduction Act , 44 U.S.C.

3501 et. seq. and has assigned OMB control number 2030–0020.

P. Statutory Authority

EPA statutory authority for awarding financial assistance under this Notice of Funds Availability include section 103 of the Clean Air Act, section 104, of the Clean Water Act, section 8001 of the Solid Waste Disposal Act, section 10 of the Toxic Substances Control Act, and section 20 of Federal Insecticide, Fungicide, and Rodenticide Act.

Section IX—How To Apply

An original and one copy of the proposal should be mailed to EPA headquarters in Washington, D.C. at the following address: Julie C. Taitt, Administration and Budget Management Team, U.S. E.P.A. Office of Policy, Economics, and Innovation, 401 M. St., S.W. (MC 1803), Washington, D.C. 20460, (202) 260–9230.

Section X—OPEI Programs Contact

For Technical Assistance Contact:

Dan Fiorino (202) 260–2749
Chuck Kent (202) 260–2462
Ken Munis (202) 260–9560

For Administrative Assistance Contact: Julie C. Taitt, 401 M. St., S.W. (MC 1803), Washington, D.C. 20460, (202) 260–9230.

Dated: August 22, 2000.

Charles W. Kent,

Associate Director for the Office of Business and Community Innovation.

[FR Doc. 00–21915 Filed 8–25–00; 8:45 am]

BILLING CODE 6560–50–P

ENVIRONMENTAL PROTECTION AGENCY

[FRL–6858–9]

U.S./Mexico Border Program; Request for Proposals

AGENCY: Environmental Protection Agency (EPA).

ACTION: Solicitation notice; Building Environmental Education Capacity Along the US/Mexico Border—in Region VI.

SUMMARY: This document solicits proposals from education institutions, environmental and educational public agencies, and not-for-profit organizations to assist the U.S. EPA Region VI in the implementation of the draft Border XXI Environmental Education (EE) Plan for the US/Mexico Border in the Lower Rio Grande Valley Region (Brownsville-Matamoros, McAllen-Reynosa, Laredo-Nuevo Laredo and surrounding communities). This solicitation notice contains all the information necessary to prepare a proposal. Federal forms are available on line, please see III, A. for web-site information. This solicitation notice is also available on line at: *http://www.epa.gov/usmexicoborder/*. If your proposal is selected as a finalist after the evaluation process is concluded, EPA will provide you with the additional Federal forms needed to process your proposal. This cooperative agreement will be awarded in the amount of $100,000 and the recipient will be required to provide a 5% match ($5,000). Please see section III., C. for additional information on matching funds.

A cooperative agreement was selected as the funding mechanism for this project since various EPA offices will be involved in project planning, implementation, and evaluation. Environmental Education programming activities in the border region are authorized under various sections of the following acts: Clean Water Act, section 104(b)(3); Safe Drinking Water Act, section 1442(b)(3); Solid Waste Disposal Act sections 6981 and 8001; Clean Air Act sections 103 and 7403; Toxic Substances Control Act, section 10(a); and Comprehensive Environmental Response and Sanctuaries Act, section 311(a).

DATES: An original proposal signed by an authorized representative plus one copy, must be mailed to EPA postmarked no later than November 21, 2000. Proposals postmarked after that date will not be considered for funding. EPA expects to make the award in early January 2001. Applicants should anticipate project start dates for January, 2001.

ADDRESSES: Applicants may submit proposals via regular U.S. mail, or express mail to the following address: Amadee Madril (6WQ–CO), U.S. Environmental Protection Agency, Region VI, 1445 Ross Avenue, Suite 1200, Dallas, TX 75202, Telephone (214) 664–2767.

FOR FURTHER INFORMATION CONTACT: Amadee Madril, U.S. Environmental Protection Agency, Region VI, Telephone (214) 664–2767 or E-Mail: madril.amadee@epa.gov.

SUPPLEMENTARY INFORMATION:

Section I: Overview, Background, and Deadlines

A. Environmental Education Versus Environmental Information

Environmental Education increases public awareness and knowledge about environmental issues and provides the skills to make informed decisions and take responsible actions. It does not advocate a particular viewpoint or course of action. It teaches individuals how to weigh various sides of an issue through critical thinking and it enhances their own problem-solving skills. Simply providing or ''distributing'' environmental information such as scientific facts or opinions about environmental issues or problems, is not considered to be environmental education. Although information is an essential element of any educational effort, environmental information is not, by itself, environmental education.

B. Background of the Border XXI EE Plan

The Border XXI EE Plan is based on a program development model known as TEEM (Training and Environmental Education Materials) which was created through a collaborative effort led by the North American Association for Environmental Education and the U.S. Peace Corps with funding from EPA's Office of Environmental Education and the U.S. Agency for International Development. The TEEM model has a proven track record in building local capacity and empowering communities to play integral roles in protecting their environment and conserving natural resources. The TEEM model is locally driven and based on needs identified by educators who have a first-hand understanding of the issues relevant to their individual communities. Ultimately, our aim is to establish a network that links U.S. and Mexican EE providers that will be responsible for improving access to EE materials/information, and developing and implementing professional/organizational development activities. The network will build stability and develop synergy through partnerships by coordinating activities, leveraging resources, capitalizing on the relative expertise of partners, and, in general, working together to achieve common goals.

The plan is designed to overlap with work already being conducted by local EE provider agencies and organizations along the entire border. Indeed TEEM efforts are currently underway in Arizona, California, Sonora, Chihuahua, and Baja California. Participants in this regional TEEM effort will be asked to take responsibility for identifying their own EE training needs, and then designing, implementing and evaluating the strategies that will meet those needs. This effort will incorporate the experiences already gained in other areas of the border.

C. Implementing the TEEM Model in Region VI

In order to achieve the overarching goal of building EE capacity in the border region, the following *general* objectives and tasks have already been identified through a collaborative process with government agencies and non profit EE providers from the border region. **Note:** when reviewing the objectives and tasks please recognize that the TEEM model is locally driven. The following tasks and objectives do not offer extensive detail so that the unfolding of the process can occur with maximum input and flexibility from participants in the region.

Objectives

- Identify priority regional environmental issues and environmental literacy needs;
- Assess EE Provider needs for program improvement;
- Plan strategies, programs, or projects to meet these needs;
- Form support networks to help implement those strategies, programs or projects; create a broad base of support that will help monitor program progress, evaluate impacts of programs and make proper adjustments for future sustainability.

Tasks

Form a Core Planning Team: Through EPA Region VI's efforts in the development of a ''Border EE Resource Guide,'' an idea has emerged as to ''who'' the EE providers are in the region. The next step will be to identify and form a core planning team of two or three of the area's leading EE providers. Additionally, this team should also include representatives with experience in the implementation of the TEEM model from other areas of the border. The Core Planning Team will then develop a mission statement which will serve as the driving force to allocate funding, invite extended participation, and publicize the TEEM effort. The core planning team will also take responsibility to begin identifying a baseline of available resources and begin to classify regional EE needs to better assemble a local organizing committee. Products resulting from the completion of this task might include: mission statement and initial needs assessment with priorities for action.

Convene a Local Organizing Committee: The next step of the Core Planning Team will be to analyze the EE providers from the region and convene a local organizing committee. Key criteria for selecting organizations should include: ability to commit resources (financial and human), geographic area of coverage, audiences targeted, environmental issues addressed, technical preparation (both science and education), quality of work completed, willingness to collaborate, and geographic location. Products resulting from the completion of this task might include: Clarification of selection criteria for Organizing Committee membership, analysis and report on existing EE program providers, invitations for participation tendered.

Identify the Needs of the Region: The Local Organizing Committee will identify the needs of the EE providers in the region. Simply put, what do EE providers need to do their jobs better? This information may be sought using interviews, questionnaires, focus groups or other means. Involving the groups themselves in the needs assessment process will be key to this task. Products resulting from the completion of this task should include, but are not limited to: Needs Assessment Report on EE in the region.

Develop Strategies, Programs and Project Options: Based on the results from the needs assessment, the Local Organizing Committee will be ready to design a strategy, program or project to meet the needs of the EE practitioners in the region. Examples of projects might include: training workshops (train-the-trainers, project planning and evaluation, curriculum development, non-formal strategies), organizational development (budgeting, leadership and communication skills, strategic planning), access to networks, information, or quality materials, etc.

Important to this phase of the process is to develop a monitoring and evaluation system for the project to measure progress, assess impact, and make changes to the project for the future based on past performance.

Products resulting from the completion of this task might include: Action Plan for the region, prioritized list of strategies to reach EE practitioners.

Select a Project(s)/Target Audience(s) for Implementation: The Organizing Committee will need to prioritize project options for reaching EE practitioners in the region. It will be essential therefore to select participants in the program who will either impact large numbers of people or be involved in the support of other organizations that provide those EE services to the population. The focus at this level is on the EE provider, the organizing committee should not be looking directly at providing EE services to the population. Products resulting from the completion of this task might include: Project(s) implementation, production of newsletter/report on projects.

Build in Follow-up Support for the Long Run: Careful consideration by the Local Organizing Committee needs to be given on how the process will continue into the future. Some strategic questions to consider include: how will the EE practitioners meet their needs in the long run, and where will the funding come from? By developing a broad base of support at the Local Organizing Committee level with representatives from a variety of organizations, Region VI will be better equipped to handle and plan for some of these difficult long-term issues.

Section II: Eligibility

Any local education agency, state education or environmental agency, college or university, not-for-profit organization as described in section 501(C)(3) of the Internal Revenue Code, or noncommercial educational broadcasting entity may submit proposal. Applicant organizations must be located in border region the United States and the majority of the educational activities must take place in the United States. A teacher's school district, an educator's nonprofit organization, or a faculty member's college or university may apply, but an individual teacher, educator, or faculty member may not.

Additionally: The recipient of this award must have experience with environmental education in the Border area, and the capability to provide training in both English and Spanish. The recipient will have a proven record of developing partnerships with key EE providers in the border region, and be recognized as a regional leader. EPA emphasizes the importance of working with and developing partners and partnerships as a key to the selection of the recipient.

Section III: Requirements for Proposals and Matching Funds

The proposal must contain two standard federal forms, a work plan with budget, and appendices, as described below. Please follow instructions and do not submit additional items.

A. Federal Forms

Application for Federal Assistance (SF–424) and Budget Information (SF–424A): The SF–424 and SF–424A are required for all federal cooperative agreements and must be submitted as part of your proposal. These two forms are available on-line as follows:

OMB SF–424, Application for Federal Assistance (PDF 10.1 kb) http://

www.whitehouse.gov/media/pdf/sf424.pdf OMB SF–424A, Budget Information—Nonconstruction Programs (PDF 15.4 kb) http://www.whitehouse.gov/media/pdf/sf424a.pdf.

Forms are also available in hard copy via fax or mail by calling (214) 665–2767. Only finalists will be asked to submit additional federal forms needed to process their proposal. EPA will make copies of your proposal for use by reviewers. Unnecessary forms create a paperwork burden for the reviewers.

B. Work Plan and Appendices

Since general objectives and tasks are already laid out for the Border XXI Plan, the work plan required for this solicitation will focus more on how an organization proposes to achieve them. The following sections must be included in the proposal. (Page numbers in parenthesis are MAXIMUMS, please do not exceed them).

1. Project Summary (One Page)

Organization: describe your organization (include goals/objectives/mission statements, etc) and the partners you plan to involve.

Project Summary: Summarize how you will accomplish the proposed objectives and tasks, and why your organization is qualified for doing so.

Costs: List the types of activities for which the EPA portion of the funds will be spent. The project summary will be scored on how well you provide an overview of your entire proposal using the topics stated above.

2. Project Implementation Description (Four Pages)

How. Describe in detail HOW you plan to accomplish each of the tasks listed above. Please be as specific as possible. Include partners, and other sources of information and resources that will assist you in completing the tasks. Also, please identify additional tasks that you feel would be necessary to complete to achieve the overall plan's objectives.

Why. Please describe in detail WHY your organization is particularly qualified to for the project. Include a project history, educational products your organization has completed, and list partner organizations that have helped you accomplish your mission.

3. Project Evaluation (One Page)

Describe how you will ensure you are accomplishing the objectives of the TEEM process as set forth above. Evaluation plans may be quantitative and/or qualitative and may include, for example, evaluation tools, observation, or outside consultation. The project evaluation will be scored on how well your plan will measure project effectiveness and apply evaluation data during the project to strengthen it.

4. Budget (One Page)

Clarify how EPA funds and non-federal matching funds will be used for specific items or activities, such as personnel/salaries, fringe benefits, travel, equipment, supplies, contract costs, and indirect costs. Include a table which lists each major proposed activity, and the amount of EPA funds and/or matching funds that will be spent on each activity. Budget periods cannot exceed two-years.

Please Note the following funding restrictions:

- Indirect costs may be requested only if your organization has already prepared an indirect cost rate proposal and has it on file, subject to audit.
- Funds for salaries and fringe benefits may be requested only for those personnel who are directly involved in implementing the proposed project and whose salaries and fringe benefits are directly related to specific products or outcomes of the proposed project. EPA strongly encourages applicants to request reasonable amounts of funding for salaries and fringe benefits to ensure that your proposal is competitive.
- EPA will not fund the acquisition of real property (including buildings) or the construction or modification of any building.

The budget section will be scored on how well the budget information clearly and accurately shows how funds will be used; and whether the funding request is reasonable given the activities proposed.

5. Appendices

Please include the following:

Time line. The time line should link the activities to a clear project schedule and indicate at what point over the months of your budget period each action, event, product, etc. occurs;

Key Personnel. Attach a one page resume for the key personnel conducting the project (Maximum of three resumes please).

Letters of Commitment. Include one page letters of commitment from partners explaining their role in the proposed project. Do not include letters of endorsement or recommendation or have them mailed in later; they will not be considered in evaluating proposals. Please do not submit other appendices or attachments such as video tapes or sample curricula. The appendices section will be scored based upon: (1) Whether the time line clarifies the work plan and allows reviewers to determine that the project is well thought out and feasible as planned; (2) whether the key personnel are qualified to implement the proposed project; and (3) whether letters of commitment are included and the extent to which a firm commitment is made.

C. Matching Funds Requirement

Non-federal matching funds of at least $5,000 (5% of the $100,000 award) are required. EPA encourages matches of more than 5%. The 5% match may be provided by the applicant alone, or, preferably in combination with partner organizations. The match may be provided in cash or by in-kind contributions and other non-cash support. In-kind contributions often include salaries or other verifiable costs and this value must be carefully documented. In the case of salaries, applicants may use either minimum wage or fair market value.

Other Federal Funds: You may use other Federal funds in addition to those provided by this program, but not for activities that EPA is funding. You may not use any federal funds to meet any part of the required 5% match described above, unless it is specifically authorized by statute. If you have already been awarded federal funds for a project for which you are seeking additional support from this solicitation, you must indicate those funds in the budget section of the work plan. You must also identify the project officer, agency, office, address, phone number, and the amount of the federal funds.

D. Submission Requirements and Copies

The applicant must submit one original and one copy of the proposal (a signed SF–424, an SF–424A, a work plan, a budget, and the appendices listed above). Do not include other attachments such as cover letters, tables of contents, additional Federal forms or appendices other than those listed above. Reviewers may lower scores on proposals for failure to follow instructions. The SF–424 should be the first page of your proposal and must be signed by a person authorized to receive funds. Blue ink for signatures is preferred. Proposals must be reproducible; they should not be bound. They should be stapled or clipped once in the upper left hand corner, on white paper, and with page numbers. Mailing addresses for submission of proposals are listed in Section I, subparagraph F of this document.

Section IV: Review and Selection Process

A. Proposal Review

Proposals submitted to EPA will be evaluated using the criteria defined in section III and IV of this solicitation. Proposals will be reviewed in two phases—the screening phase and the evaluation phase. During the screening phase, proposals will be reviewed to determine whether they meet the basic requirements of the solicitation. Only those proposals which meet all of the basic requirements will enter the full evaluation phase of the review process. During the evaluation phase, proposals will be evaluated based upon the quality of their work plans. At the conclusion of the evaluation phase, the reviewers will score work plans on a scale from 0–100 as follows: Project Summary—10 Points; Project Implementation Description—40 Points (up to 10 points for partnerships); Project Evaluation—10 Points; Budget—15 Points; Appendices—15 Points; Bonus Points—10 Points (reviewers grant these for outstanding proposals, or special circumstances).

B. Final Selections

After individual proposals are evaluated and scored by reviewers, as described under section III and IV, EPA officials in Region VI and at Headquarters will select a diverse range of finalists from the highest ranking proposals. In making the final selections, EPA will take into account the following:

- Effectiveness of collaborative activities and partnerships, as needed to successfully develop or implement the project;
- Demonstrated leadership in the field of environmental education in the US/Mexico Border Region;
- Cost effectiveness of the proposal; and
- Organizational and administrative capacity to manage federal funds

C. Notification to Applicants

Applicants will receive a confirmation that EPA has received their proposal. EPA will notify applicants about the outcome of their proposal when the award is made in September, 2000.

Section VI: Award Recipient Responsibilities

A. Responsible Officials

The project must be performed by the applicant or by a person satisfactory to the applicant and EPA. The proposal must identify any person other than the applicant who will assist in carrying out the project. These individuals are responsible for receiving the cooperative agreement award agreement from EPA and ensuring that all cooperative agreement conditions are satisfied.

B. Incurring Costs

The recipient may begin incurring costs on the start date identified in the EPA award agreement. Activities must be completed and funds spent within the time frames specified in the agreement.

C. Reports and Work Products

Specific reporting requirements will be identified in the EPA award agreement. The recipient will be required to submit formal semi-annual progress reports as well as a final report and copies of all work products within 90 days after the expiration of the budget period. This report will be accepted as the final report unless the EPA project officer notifies you that changes must be made.

Dated: August 15, 2000.

Gregg A. Cooke,

Regional Administrator, Region VI.

[FR Doc. 00–21919 Filed 8–25–00; 8:45 am]

BILLING CODE 6560–50–P

ENVIRONMENTAL PROTECTION AGENCY

[OPP–34236; FRL–6741–8]

Pesticides; Availability of Risk Assessments

AGENCY: Environmental Protection Agency (EPA).

ACTION: Notice.

SUMMARY: This notice announces the availability of risk assessments that were developed as part of the EPA's process for making Reregistration Eligibility Decisions (REDs) for pesticides and for tolerance reassessments consistent with the Federal Food, Drug, and Cosmetic Act (FFDCA), as amended by the Food Quality Protection Act of 1996 (FQPA). These risk assessments are the human health and ecological risk assessments and related documents for diclofop methyl. These risk assessments are being released to the public as part of the joint initiative between EPA and the Department of Agriculture (USDA) to strengthen stakeholder involvement and help ensure decisions made under FQPA are transparent and based on the best available information. The tolerance reassessment process will ensure that the United States continues to have the safest and most abundant food supply.

DATES: The risk assessments and related documents are available in the OPP Docket. While there is no formal public comment period, the Agency will accept comments on the risk assessment documents. Comments submitted within the first 30 days are most likely to be considered.

ADDRESSES: Comments may be submitted by mail, electronically, or in person. Please follow the detailed instructions for each method as provided in Unit II. of the **SUPPLEMENTARY INFORMATION**. To ensure proper receipt by EPA, it is imperative that you identify docket control number of the chemical of specific interest in the subject line on the first page of your response.

FOR FURTHER INFORMATION CONTACT: Anne Overstreet, Special Review and Reregistration Division (7508W), Office of Pesticide Programs, Environmental Protection Agency, 1200 Pennsylvania Ave., NW., Washington, DC 20460; telephone number: (703) 308–8068; e-mail address: overstreet.anne@epa.gov.

SUPPLEMENTARY INFORMATION:

I. General Information

A. Does this Action Apply to Me?

This action is directed to the public in general, nevertheless, a wide range of stakeholders will be interested in obtaining the risk assessments for diclofop methyl, including environmental, human health, and agricultural advocates; the chemical industry; pesticide users; and members of the public interested in the use of pesticides on food. Since other entities also may be interested, the Agency has not attempted to describe all the specific entities that may be affected by this action. If you have any questions regarding the applicability of this action to a particular entity, consult the person listed under **FOR FURTHER INFORMATION CONTACT**.

B. How Can I Get Additional Information, Including Copies of this Document and Other Related Documents?

1. *Electronically*. You may obtain electronic copies of this document, and certain other related documents that might be available electronically, from the EPA Internet Home Page at http://www.epa.gov/. On the Home Page select ''Laws and Regulations,'' '' Regulations and Proposed Rules,'' and then look up the entry for this document under the **Federal Register**—Environmental Documents. You can also go directly to the **Federal Register** listings at http://www.epa.gov/fedrgstr/. In addition, copies of the pesticide risk assessments

released to the public may also be accessed at http: www.epa.gov/pesticides.

2. *In person*. The Agency has established an official record for this action under docket control numbers OPP–34236. The official record consists of the documents specifically referenced in this action, and other information related to this action, including any information claimed as Confidential Business Information (CBI). This official record includes the documents that are physically located in the docket, as well as the documents that are referenced in those documents. The public version of the official record does not include any information claimed as CBI. The public version of the official record, which includes printed, paper versions of any electronic comments submitted during an applicable comment period is available for inspection in the Public Information and Records Integrity Branch (PIRIB), Rm. 119, Crystal Mall #2, 1921 Jefferson Davis Hwy., Arlington, VA, from 8:30 a.m. to 4 p.m., Monday through Friday, excluding legal holidays. The PIRIB telephone number is (703) 305–5805.

II. How Can I Respond to this Action?

A. How and to Whom Do I Submit Comments?

You may submit comments through the mail, in person, or electronically. To ensure proper receipt by EPA, it is imperative that you identify docket control number for the specific chemical of interest in the subject line on the first page of your response.

1. *By mail*. Submit comments to: Public Information and Records Integrity Branch, Information Resources and Services Division (7502C), Office of Pesticide Programs, Environmental Protection Agency, 1200 Pennsylvania Ave., NW., Washington, DC 20460.

2. *In person or by courier*. Deliver comments to: Public Information and Records Integrity Branch, Information Resources and Services Division, Office of Pesticide Programs, Environmental Protection Agency, Rm. 119, Crystal Mall# 2, 1921 Jefferson Davis Hwy., Arlington, VA. The PIRIB is open from 8:30 a.m. to 4 p.m., Monday through Friday, excluding legal holidays. The PIRIB telephone number is (703) 305–5805.

3. *Electronically*. Submit electronic comments by e-mail to: ''opp-docket@epa.gov,'' or you can submit a computer disk as described in this unit. Do not submit any information electronically that you consider to be CBI. Electronic comments must be submitted as an ASCII file, avoiding the use of special characters and any form of encryption. Comments and data will also be accepted on standard computer disks in WordPerfect 6.1/8.0 or ASCII file format. All comments in electronic form must be identified by the docket control number of the chemical of specific interest. Electronic comments may also be filed online at many Federal Depository Libraries.

B. How Should I Handle CBI Information that I Want to Submit to the Agency?

Do not submit any information electronically that you consider to be CBI. You may claim information that you submit to EPA in response to this document as CBI by marking any part or all of that information as CBI. Information so marked will not be disclosed except in accordance with procedures set forth in 40 CFR part 2. In addition to one complete version of the comment that includes any information claimed as CBI, a copy of the comment that does not contain the information claimed as CBI must be submitted for inclusion in the public version of the official record. Information not marked confidential will be included in the public version of the official record without prior notice. If you have any questions about CBI or the procedures for claiming CBI, please consult the person listed under **FOR FURTHER INFORMATION CONTACT**.

III. What Action is the Agency Taking?

EPA is making available to the public the risk assessments that have been developed as part of EPA's process for tolerance reassessment and reregistration. While there is no formal public comment period, the Agency will accept comments on the risk assessment documents. Comments submitted within the first 30 days are most likely to be considered. REDs for pesticides developed under the interim process will be made available for public comment.

EPA and USDA have been using a pilot public participation process for the assessment of organophosphate pesticides since August 1998. In considering how to accomplish the movement from the current pilot being used for the organophosphate pesticides to the public participation process that will be used in the future for non-organophosphates, such as diclofop methyl, EPA and USDA have adopted an interim public participation process for the non-organophosphate pesticides scheduled for tolerance reassessment and reregistration in 2000. The interim public participation process ensures public access to the Agency's risk assessments while also allowing EPA to meet its reregistration commitments. The interim public participation process for the non-organophosphate pesticides scheduled for tolerance reassessment and reregistration in 2000 and 2001 takes into account that the risk assessment development work on these pesticides is substantially complete. The interim public participation process involves: A registrant error correction period; a period for the Agency to respond to the registrant's error comments; the release of the refined risk assessments and risk characterizations to the public via the docket and EPA's internet website; a significant effort on stakeholder consultations, such as meetings and conference calls; and the issuance of the risk management document (i.e., RED) after the consideration of issues and discussions with stakeholders. USDA plans to hold meetings and conference calls with the public (i.e., interested stakeholders such as growers, USDA Cooperative Extension Offices, commodity groups, and other Federal government agencies) to discuss any identified risks and solicit input on risk management strategies. EPA will participate in USDA's meetings and conference calls with the public. This feedback will be used to complete the risk management decisions and the RED. EPA plans to conduct a close-out conference call with interested stakeholders to describe the regulatory decisions presented in the RED. REDs for pesticides developed under the interim process will be made available for public comment.

Included in the public version of the official record is the Agency's risk assessments and related documents for diclofop methyl. As additional comments, reviews, and risk assessment modifications become available, these will also be docketed for the pesticides listed in this notice. These risk assessments reflect only the work and analysis conducted as of the time they were produced and it is appropriate that, as new information becomes available and/or additional analyses are performed, the conclusions they contain may change.

List of Subjects

Environmental protection, Chemicals, Pesticides and pests.

Dated:August 23, 2000.

Lois A. Rossi,

Director, Special Review and Reregistration Division, Office of Pesticide Programs.

[FR Doc. 00–22002 Filed 8–25–00; 8:45 am]

BILLING CODE 6560–50–S

ENVIRONMENTAL PROTECTION AGENCY

[FRL–6858–7]

Proposed Administrative Penalty Assessment and Opportunity to Comment Regarding Rego Trucking Limited, Inc.

AGENCY: Environmental Protection Agency (''EPA'').

ACTION: Notice of Proposed Assessment of Clean Water Act Class I Administrative Penalty and Opportunity to Comment.

SUMMARY: EPA is providing notice of a proposed administrative penalty assessment for alleged violations of the Clean Water Act (''Act''). EPA is also providing notice of opportunity to comment on the proposed assessment.

EPA is authorized under section 309(g) of the Act, 33 U.S.C. 1319(g), to assess a civil penalty after providing the person subject to the penalty notice of the proposed penalty and the opportunity for a hearing, and after providing interested persons notice of the proposed penalty and a reasonable opportunity to comment on its issuance. Under section 309(g), any person who without authorization discharges a pollutant to a navigable water, as those terms are defined in section 502 of the Act, 33 U.S.C. 1362, may be assessed a penalty in a ''Class I'' administrative penalty proceeding. Class I proceedings under section 309(g) are conducted in accordance with the ''Consolidated Rules of Practice Governing the Administrative Assessment of Civil Penalties, Issuance of Compliance or Corrective Action Orders, and the Revocation, Termination or Suspension of Permits,'' 40 CFR Part 22 (''Consolidated Rules''), published at 64 FR 40138, 40177 (July 23, 1999).

On February 10, 2000, EPA commenced a Class I penalty proceeding for the assessment of penalties by filing the following Complaint with Danielle Carr, Regional Hearing Clerk, U.S. EPA, Region IX, 75 Hawthorne Street, San Francisco, California 94105, (415) 744–1391:

In the matter of Rego Trucking Limited, Inc., Docket No. CWA–9–2000–0004, proposed penalty, up to $25,000; for the unauthorized discharge from Rego Trucking Limited, Inc., Kauai, Hawaii, during February, 1995, into a wetland identified as the ''jailhouse swamp'' on Kauai, Hawaii.

Procedures through which the public may submit written comment on a proposed Class I order or participate in a Class I proceeding, and the procedures by which a respondent may request a hearing, are set forth in the Consolidated Rules. The deadline for submitting public comment on a proposed Class I order is thirty (30) days after publication of this notice. The Regional Administrator of EPA, Region 9 may issue an order upon default if the respondent in the proceeding fails to file a response within the time period specified in the proposed Consolidated Rules.

FOR FURTHER INFORMATION: Persons wishing to receive a copy of the proposed Consolidated Rules, review the complaint, proposed consent order, or other documents filed in the proceeding, comment upon the proposed penalty, or participate in any hearing that may be held, should contact Danielle Carr, Regional Hearing Clerk, U.S. EPA, Region 9, 75 Hawthorne Street, San Francisco, CA 94105, (415) 744–1391. All information submitted by Rego Trucking Limited, Inc., is available as part of the administrative record, subject to provisions of law restricting public disclosure of confidential information. The file is available for inspection during normal business hours at the office of the Regional Hearing Clerk. In order for the opportunity to comment, EPA will not take final action in the proceeding prior to thirty days after issuance of this notice.

Dated: August 10, 2000.

Alexis Strauss,

Director, Water Division.

[FR Doc. 00–21916 Filed 8–25–00; 8:45 am]

BILLING CODE 5650–50–P

OFFICE OF NATIONAL DRUG CONTROL POLICY

Notice of Meeting of Drug Free Communities Advisory Commission

SUMMARY: In accordance with the Drug-Free Communities Act, a meeting of the Drug Free Communities Advisory Commission will be held on October 4–5, 2000 at the Office of National Drug Control Policy in the 5TH Floor Conference Room, 750 17th Street NW, 7th Floor, Washington, DC. The meeting will commence at 1:00 p.m. on Wednesday October 4th and adjourn for the evening at 5:00 p.m. The meeting will resume at 8:30 a.m. on Thursday October 5th and conclude at 12:00 noon. The agenda will include: a report by the Office of Juvenile Justice and Delinquency Prevention regarding the FY2000 Drug Free Communities grant selection process; a report by the ONDCP Administrator of the Drug Free Communities Support Program; and a legislative update regarding the Drug Free Communities 2001 Budget. There will be an opportunity for public comment from 11:00 a.m. until 11:30 on Thursday October 5, 2000.

FOR FURTHER INFORMATION CONTACT: Please direct any questions to Linda V. Priebe, Attorney-Advisor, (202) 395–6622, Office of National Drug Control Policy, Executive Office of the President, Washington, DC 20503.

Dated: August 16, 2000.

Linda V. Priebe,

Attorney-Advisor.

[FR Doc. 00–21836 Filed 8–25–00; 8:45 am]

BILLING CODE 3180–02–P

FEDERAL EMERGENCY MANAGEMENT AGENCY

Privacy Act of 1974: Cerro Grande Fire Assistance Claim Files

AGENCY: Federal Emergency Management Agency (FEMA).

ACTION: Notice of a new system of records.

SUMMARY: In accordance with the Privacy Act of 1974 (5 U.S.C. 552a), we (FEMA) give notice that we are establishing a new system of records under the authority of the Cerro Grande Fire Assistance Act, Public Law 106–246. This system of records will enable us to register claims, verify information provided by claimants, make determinations for compensation, and process and evaluate appeals as required by the Cerro Grande Fire Assistance Act.

DATES: This new system of records takes effect August 28, 2000. We will accept public comments until September 28, 2000.

ADDRESSES: We invite your comments on this system of records. Please address them to the Rules Docket Clerk, Office of the General Counsel, Federal Emergency Management Agency, room 840, 500 C Street, SW., Washington, DC 20472, (telefax) (202) 646–4536, or (email) rules@fema.gov.

FOR FURTHER INFORMATION CONTACT: Sandra Jackson, FOIA/Privacy Act Specialist, Federal Emergency

Management Agency, room 840, 500 C Street, SW., Washington, DC 20472, (202) 646–3840, (telefax) (202) 646–4536, or (email) *Sandra.Jackson@fema.gov.*

SUPPLEMENTARY INFORMATION:

We are establishing a claims control and management system to maintain information about injured persons who have filed claims under the Cerro Grande Fire Assistance Act, Public Law 106–246. The Congress enacted the statute to compensate victims of the Cerro Grande fire that occurred in New Mexico in May 2000. On May 4, 2000, the National Park Service of the Department of the Interior initiated a prescribed burn at Bandelier National Monument in New Mexico. Within twenty-four hours, the prescribed burn grew out of control and turned quickly into a wildfire (also referred to as the Cerro Grande fire) consuming both Federal and non-Federal land. The fire caused evacuations in the Los Alamos, New Mexico area. Damage from the fire was extensive, resulting in the loss of Federal, State, local, tribal, and private property. The Secretary of the Interior and the National Park Service assumed responsibility for the fire and for the resulting property damage.

The Cerro Grande Fire Assistance Act provides for the expeditious consideration and settlement of claims for injuries suffered as a result of the fire. Under the statute, the Congress charged FEMA with establishing and administering the Office of Cerro Grande Fire Claims to handle claims from persons injured as a result of the fire.

This system of records will maintain information regarding claims filed by injured persons under the statute. It will consist of computerized files and paper records retrieved by name, address, and claim number.

Accordingly, we add FEMA/CGC–1, of the FEMA Privacy Act systems of records to read as follows:

SYSTEM NAME:

FEMA/CGC–1, Cerro Grande Fire Assistance Act Claim Files.

SECURITY CLASSIFICATION:

Unclassified.

SYSTEM LOCATION:

Cerro Grande Fire Assistance Claims Office, New Mexico.

CATEGORIES OF INDIVIDUALS COVERED BY THE SYSTEM:

Injured parties claiming compensation for injury to person, property, and economic losses resulting from the Cerro Grande fire of May 2000, and subrogees of such injured parties.

CATEGORIES OF RECORDS IN THE SYSTEM:

(a) Records of claims include names, addresses, telephone numbers, nature and amount of claim, insurance coverage information, and evidence to support claim for the purpose of receiving compensation.

(b) Inspection and appraisal reports containing identification information relating to the claim and results of survey of damaged property and goods.

(c) Supporting medical documentation.

(d) Notice of Loss forms, Proof of Loss forms, documents from other agencies relating to the claim, general administrative and fiscal information, payment schedules, and disposition of claims, general correspondence, including requests for disbursement of payments, contracts, leases, estimates for repair or replacement of fire damaged/ destroyed residence or business.

(e) Claim decisions and appeals.

AUTHORITY FOR MAINTENANCE OF THE SYSTEM:

Cerro Grande Fire Assistance Act, P.L. 106–246, 106th Congress, 2d Session (2000), 114 Stat. 511, 584.

PURPOSE:

To register claims, evaluate and verify information provided by claimants, inspect damaged property, make determinations for compensation, and make determinations on claims relating to reasonable mitigation efforts which reduce the risk of wildfire, flood, or other natural disaster in the affected counties.

ROUTINE USES RECORDS MAINTAINED IN THE SYSTEM, INCLUDING CATEGORIES OF USERS AND THE PURPOSES OF SUCH ACTS:

The Privacy Act permits us to disclose information about individuals without their consent for a routine use, *i.e.*, when the information will be used for a purpose that is compatible with the purpose for which we collected the information. The routine uses of this system are:

(a) Disclosure may be made to agency contractors who have been engaged to assist the agency in the performance of a contract service related to this system of records and who need to have access to the records in order to perform the activity. Recipients must comply with the requirements of the Privacy Act of 1974, as amended, 5 USC 552a.

(b) Disclosure may be made to a member of Congress or to a Congressional staff member in response to an inquiry of the Congressional office made at the written request of the constituent about whom the record is maintained.

(c) Disclosure may be made to other Federal agencies that FEMA has determined provided Cerro Grande fire-related assistance to claimant in order to ensure that benefits are not duplicated.

(d) Disclosure of information submitted by an individual Claimant may be made to an insurance company or other third party that has submitted a subrogation claim relating to such Claimant when it is necessary in FEMA's opinion to ensure that benefits are not duplicated and to efficiently coordinate the processing of claims brought by individuals and subrogees.

(e) Disclosure of property loss information may be made to local governments in Los Alamos, Rio Arriba, Sandoval and Santa Fe counties and the Pueblos of San Ildefonso and Santa Clara for the purpose of preparing community-wide mitigation plans.

(f) When a record on its face, or in conjunction with other records, indicates a violation or potential violation of law, whether civil, criminal or regulatory in nature, and whether arising by general statute or particular program statute, or by regulation, rule, or order issued pursuant thereto, disclosure may be made to the appropriate agency, whether Federal, foreign, State, local, or tribal or other public authority responsible for enforcing, investigating or prosecuting such violation or charged with enforcing or implementing the statute, or rule, regulation, or order issued pursuant thereto, if the information disclosed is relevant to any enforcement, regulatory, investigative or prosecutive responsibility of the receiving entity.

(g) Disclosure may be made to the National Archives and Records Administration for the purpose of conducting records management studies under the authority of 44 U.S.C. 2904, and 2906.

DISCLOSURE TO CONSUMER REPORTING AGENCIES:

Disclosures under 5 U.S.C. 552a (b)(12): Disclosures may be made from this system to ''consumer reporting agencies'' as defined in the Fair Credit Reporting Act, 15 U.S.C. 1681a(f).

POLICIES AND PRACTICES FOR STORING, RETRIEVING, ACCESSING, RETAINING, AND DISPOSING OF RECORDS IN THE SYSTEM:

Storage: Records in this system are stored in magnetic media (*e.g.*, computer hard drives and computer disks) and on paper. Paper printouts of these data are made when required for study. The system may also contain photocopies of numerous documents

and records, which are filed in appropriate file folders.

Retrievability: By name, address, and claim number.

Safeguards: We will employ a number of security measures to minimize the risk of unauthorized access to or disclosure of personal data in the proposed system. These measures include the use of passwords and access codes to enter the computer system which will maintain the data, and storage of the computerized records and paper records in secured areas that are accessible only to employees who require the information in performing their official duties. Paper documents are stored either in lockable file cabinets within locked rooms or in otherwise secured areas. In addition, we will require contract employees to comply with the safeguards that must be followed to protect the data.

Retention and Disposal: The files are maintained at the Cerro Grande Fire Assistance Claims Office until completion of a claim. After such time, the files will be transferred to FEMA, 500 C Street, SW., Washington, DC for three years, and then they will be transferred to the appropriate Federal Records Center for seven years until they are destroyed. Means of disposal are appropriate to the storage medium (*e.g.*, erasure of disks, shredding of paper records, etc.)

SYSTEM MANAGER(S) AND ADDRESSES:

Director of the Cerro Grande Fire Assistance Claims Office, New Mexico; and FEMA, room 840, 500 C Street, SW., Washington, DC 20472.

NOTIFICATION PROCEDURES:

An individual can find out whether this system of records contains information about him/her by writing to the system manager at the address shown above and providing his/her name and address. Inquiries should be addressed to the System Manager. Written requests should be clearly marked, ''Privacy Act Request'' on the envelope and letter. Include full name, some type of appropriate personal identification, and current address.

When requesting notification of records in person, the individual should be able to provide some acceptable identification, such as a driver's license, passport, employing office's identification card, military identification card, student identification card or other identification data.

RECORDS ACCESS PROCEDURES:

Same as notification procedures described above. Individuals requesting access to their records should also reasonably describe the record(s) they are seeking.

CONTESTING RECORDS PROCEDURE:

Same as notification procedures described above. Individuals contesting the contents of a record in the system should also reasonably describe the record(s), specify the information being contested, and state the corrective action sought with supporting justification showing how the record is untimely, incomplete, inaccurate, or irrelevant. FEMA Privacy Act regulations are located at 44 C.F.R. Part 6.

RECORD SOURCE CATEGORIES:

Information in this system is obtained from claimants seeking compensation under the Cerro Grande Fire Assistance Act, P.L. 106–246, attorneys, claims adjusters, inspectors and appraisers, insurance companies, medical officials, and Federal, State, and local agencies.

SYSTEM EXEMPTIONS FROM CERTAIN PROVISIONS OF THE ACT:

None.

Dated: August 23, 2000.

James L. Witt,

Director.

[FR Doc. 00–21927 Filed 8–25–00; 8:45 am]

BILLING CODE 6718–01–P

FEDERAL RESERVE SYSTEM

Change in Bank Control Notices; Acquisitions of Shares of Banks or Bank Holding Companies

The notificants listed below have applied under the Change in Bank Control Act (12 U.S.C. 1817(j)) and § 225.41 of the Board's Regulation Y (12 CFR 225.41) to acquire a bank or bank holding company. The factors that are considered in acting on the notices are set forth in paragraph 7 of the Act (12 U.S.C. 1817(j)(7)).

The notices are available for immediate inspection at the Federal Reserve Bank indicated. The notices also will be available for inspection at the offices of the Board of Governors. Interested persons may express their views in writing to the Reserve Bank indicated for that notice or to the offices of the Board of Governors. Comments must be received not later than September 11, 2000.

A. Federal Reserve Bank of Atlanta (Cynthia C. Goodwin, Vice President) 104 Marietta Street, N.W., Atlanta, Georgia 30303–2713:

1. Gilbert J. Wellman, Sarasota, Florida; Mary E. Wellman, Sarasota, Florida; Robert F. Wellman, Indianapolis, Indiana; Barbara L. Lundgren, Centerville, Ohio; Charles V. Wellman, Willoughby Hills, Ohio; Margaret Eckstein, Willoughby Hills, Ohio; Mary M. Kearney, Tuscon, Arizona; Geoffrey N. Kearney, Tuscon, Arizona; David L. Wellman, San Antonio, Texas; Curtis P. Wellman, Carmel, Indiana; and Anne M. Fitzgerald, Laguna Niguel, California; to retain additional outstanding shares of Sarasota BanCorporation, Inc., Sarasota, Florida and thereby indirectly acquire additional voting shares of Sarasota Bank, Sarasota, Florida.

Board of Governors of the Federal Reserve System, August 22, 2000.

Robert deV. Frierson,

Associate Secretary of the Board.

[FR Doc. 00–21842 Filed 8–25–00; 8:45 am]

BILLING CODE 6210–01–P

FEDERAL RESERVE SYSTEM

Formations of, Acquisitions by, and Mergers of Bank Holding Companies

The companies listed in this notice have applied to the Board for approval, pursuant to the Bank Holding Company Act of 1956 (12 U.S.C. 1841 *et seq.*) (BHC Act), Regulation Y (12 CFR Part 225), and all other applicable statutes and regulations to become a bank holding company and/or to acquire the assets or the ownership of, control of, or the power to vote shares of a bank or bank holding company and all of the banks and nonbanking companies owned by the bank holding company, including the companies listed below.

The applications listed below, as well as other related filings required by the Board, are available for immediate inspection at the Federal Reserve Bank indicated. The application also will be available for inspection at the offices of the Board of Governors. Interested persons may express their views in writing on the standards enumerated in the BHC Act (12 U.S.C. 1842(c)). If the proposal also involves the acquisition of a nonbanking company, the review also includes whether the acquisition of the nonbanking company complies with the standards in section 4 of the BHC Act (12 U.S.C. 1843). Unless otherwise noted, nonbanking activities will be conducted throughout the United States. Additional information on all bank holding companies may be obtained from the National Information Center website at www.ffiec.gov/nic/.

Unless otherwise noted, comments regarding each of these applications must be received at the Reserve Bank indicated or the offices of the Board of

Governors not later than September 21, 2000.

A. Federal Reserve Bank of Chicago (Phillip Jackson, Applications Officer) 230 South LaSalle Street, Chicago, Illinois 60690–1414:

1. F. F. Holding Corp., West Chicago, Illinois; to acquire 37.5 percent of the voting shares of Rush Oak Corporation, Chicago, Illinois; and thereby indirectly acquire Oak Bank, Chicago, Illinois.

B. Federal Reserve Bank of Kansas City (D. Michael Manies, Assistant Vice President) 925 Grand Avenue, Kansas City, Missouri 64198–0001:

1. First Liberty Capital Corporation ESOP, Hugo, Colorado; to become a bank holding company by acquiring 25.37 percent of the voting shares of First Liberty Capital Corporation, Hugo, Colorado, and thereby indirectly acquire First National Bank of Hugo, Hugo, Colorado.

Board of Governors of the Federal Reserve System, August 22, 2000.

Robert deV. Frierson,

Associate Secretary of the Board.

[FR Doc. 00–21841 Filed 8–25–00; 8:45 am]

BILLING CODE 6210–01–P

GENERAL SERVICES ADMINISTRATION

[OMB Control No. 3090–0275]

Submission for OMB Review; Comment Request Child Care Subsidy Application—Provider

AGENCY: Office of Child Care, GSA.

ACTION: Notice of request for approval of a new information collection entitled Child Care Subsidy Application—Provider.

SUMMARY: Under the provisions of the Paperwork Reduction Act of 1995 (44 U.S.C. Chapter 35), GSA has submitted to the Office of Management and Budget (OMB) a request to review and approve a new information collection concerning Child Care Subsidy Application—Provider. An emergency review was requested by OMB and notice was published in the **Federal Register** at 65 FR 24698, April 27, 2000. OMB approved the emergency collection and assigned OMB Control No. 3090–0275. The information collection also was published in the **Federal Register** on August 9, 2000 at 65 FR 37980 allowing for the standard 60-day public comment period. No comments were received.

The proposed information collection activity is for approval of the form for implementation of a GSA child care subsidy for lower income GSA employees in accordance with provisions of the Office of Personnel Management Rules and Regulations 5 CFR Part 792, Agency Use of Appropriated Funds for Lower Income Employees. The rule was published March 14, 2000. The form would verify the child care fees paid by Federal employees to licensed child care providers so that providers could be paid a portion of those fees by GSA. The rule requires funds to subsidize lower income employees' child care rates be given to child care providers rather than employees. The form will also request banking information so those child care providers can be paid via electronic funds transfer.

DATES: Submit comments on or before September 27, 2000.

ADDRESSES: Comments regarding this burden estimate or any other aspect of this collection of information, including suggestions for reducing this burden, should be submitted to: Edward Springer, GSA Desk Officer, OMB Room 3235, NEOB, Washington, DC 20503 and also may be submitted to Marjorie Ashby, General Services Administration (MVP), 1800 F Street NW, Washington, DC 20405.

FOR FURTHER INFORMATION CONTACT: Bonnie Storm, Office of Childcare, General Services Administration, 202–208–5119.

SUPPLEMENTARY INFORMATION:

A. Purpose

The purpose of this Notice is to consult with and solicit comments from the public concerning the proposed collection of information regarding GSA child care subsidy for lower income GSA employees.

B. Annual Reporting Burden

Respondents: 50; *annual responses:* 50; *average hours per response:* .15; *burden hours:* 12.5.

Copy of Proposal: A copy of this proposal may be obtained from the Office of Child Care, Room 6116, GSA Building, 1800 F Street NW, Washington, DC 20405, or by telephoning (202) 208–5119.

Dated: August 21, 2000.

David A. Drabkin,

Deputy Associate Administrator for Acquisition Policy.

[FR Doc. 00–21853 Filed 8–25–00; 8:45 am]

BILLING CODE 6820–61–M

GENERAL SERVICES ADMINISTRATION

Privacy Act of 1974; System of Records

AGENCY: General Services Administration.

ACTION: Notice of a new system of records subject to the Privacy Act of 1974.

SUMMARY: The General Services Administration (GSA) is providing notice of the establishment of a new record system, Transportation Benefits Records (GSA/Transit–1). The new system will collect information from employees applying for transportation benefits to be used on public transportation and vanpools to and from the workplace. System information will be used to determine employee eligibility for transit subsidies and to disburse monetary and non-monetary benefits to eligible employees. The new system implements measures that reduce traffic congestion and air pollution and expand commuting alternatives for employees.

DATES: Comments on the new system must be provided by September 27, 2000. The new system will become effective without further notice on September 27, 2000, unless comments dictate otherwise.

ADDRESSES: Address comments to: John Hughes, General Services Administration, BEAP, 1800 F Street, NW, Washington, DC 20405; or to GSA Privacy Act Officer, General Services Administration, CAI, 1800 F Street, NW, Washington, DC 20405.

FOR FURTHER INFORMATION CONTACT: John Hughes at the above address, or telephone (202) 501–2162.

GSA/Transit–1

SYSTEM NAME:

Transportation Benefits Records.

SYSTEM LOCATION:

System records are maintained by the Office of Management Services, 1800 F St. NW, Washington, DC 20405; by the GSA Finance Center in the Heartland Region, Kansas City, MO; and by each of GSA's regional offices.

CATEGORIES OF INDIVIDUALS COVERED BY THE SYSTEM:

Employees applying for transit subsidies for use of public transportation and vanpools to and from the workplace.

CATEGORIES OF RECORDS IN THE SYSTEM:

Record categories may include name, home address, Social Security Number,

work organization and location, mode of transportation, and commuting costs.

AUTHORITY FOR MAINTENANCE OF THE SYSTEM:

Pub. L. 101–509; E.O. 13150; 26 USC 132(f); 5 USC 5701–5733; and Federal Employees Clean Air Incentives Act (section 2(a) of Pub. L. 103–172, found at 5 USC 7905.

PURPOSE:

To establish and maintain systems for providing monetary and non-monetary transportation fringe benefits to employees who use mass transportation and vanpools to commute to and from work.

ROUTINE USES OF RECORDS MAINTAINED IN THE SYSTEM, INCLUDING CATEGORIES OF USERS AND THE PURPOSE OF SUCH USES:

System information is used to determine the eligibility of applicants for transportation benefits and to disburse benefits to eligible employees through the Department of the Treasury. The information also may be disclosed as a routine use to:

a. The Federal, State, or local agency responsible for investigating, prosecuting, enforcing, or implementing a statute, rule, regulation, or order, where the General Services Administration becomes aware of a violation or potential violation of civil or criminal law or regulation.

b. A Member of Congress or to a congressional staff member in response to a request for assistance by the subject of record.

c. Another Federal agency or to a court when the Government is party to a judicial proceeding before the court.

d. The Office of Personnel Management or the General Accounting Office when the information is required for evaluation of the subsidy program.

e. An expert, consultant, or contractor of GSA in the performance of a Federal duty to which the information is relevant.

POLICIES AND PRACTICES FOR STORING, RETRIEVING, ACCESSING, RETAINING, AND DISPOSING OF RECORDS IN THE SYSTEM:

STORAGE:

System records are stored electronically and on paper.

RETRIEVABILITY:

Records may be retrieved by name, mode of transportation, Social Security Number, or other identifier in the system.

SAFEGUARDS:

Records are safeguarded in accordance with the Privacy Act and the Computer Security Act. Technical, administrative, and personnel security measures ensure confidentiality and integrity of system data. Access is limited to authorized individuals.

RETENTION AND DISPOSAL:

Applications will be maintained for as long as the applicant is an eligible participant in the subsidy program. System records are retained and disposed of according to GSA records maintenance and disposition schedules and the requirements of the National Archives and Records Administration (NARA).

SYSTEM MANAGER(S) AND ADDRESS:

John Hughes, General Services Administration (BEAP), 1800 F Street, NW, Washington, DC 20405.

NOTIFICATION PROCEDURES:

Inquiries should be directed to the system manager at the above address.

RECORD ACCESS PROCEDURES:

Requests for access to records should be directed to the system manager. GSA rules for accessing records under the Privacy Act are provided in 41 CFR part 105–64.

RECORD CONTESTING PROCEDURES:

Requests to correct records should be directed to the system manager. GSA rules for contesting record contents and for appealing determinations are provided in 41 CFR part 105–64.

RECORD SOURCE CATEGORIES:

Sources for information in the system are: employees submitting applications for parking permits, vanpool membership, ridesharing information, and transit subsidies; and other Federal agencies participating in the program.

Dated: August 21, 2000.

Daniel K. Cooper,

Director, Information Management Division.

[FR Doc. 00–21854 Filed 8–25–00; 8:45 am]

BILLING CODE 6820–34–M

DEPARTMENT OF HEALTH AND HUMAN SERVICES

Office of the Secretary

Agency Information Collection Activities: Proposed Collections; Comment Request

The Department of Health and Human Services, Office of the Secretary will periodically publish summaries of proposed information collection projects and solicit public comments in compliance with the requirements of Section 3506(c)(2)(A) of the Paperwork Reduction Act of 1995. To request more information on the project or to obtain a copy of the information collection plans and instruments, call the OS Reports Clearance Officer on (202) 690–6027.

Comments are invited on: (a) Whether the proposed collection of information is necessary for the proper performance of the functions of the agency, including whether the information shall have practical utility; (b) the accuracy of the agency's estimate of the burden of the proposed collection of information; (c) ways to enhance the quality, utility and clarity of the information to be collected; and (d) ways to minimize the burden of the collection of information on respondents, including through the use of automated collection techniques or other forms of information technology.

Proposed Project 1. Research Misconduct: An Inquiry into Etiology and Stigma—NEW—The Office of Research Integrity (ORI), PHS is responsible for developing activities to prevent research misconduct and improve research integrity. The purpose of this survey is to study research misconduct. The survey will contribute to a better understanding of scientific misconduct, its causes, its effects on the careers of those found guilty of such misconduct and possible preventive and control measures. *Respondents:* Individuals; *Burden Information*—Number of Respondents: 84; Burden per Response: 2 hours; Total Burden: 168 hours.

Send comments to Cynthia Agens Bauer, OS Reports Clearance Officer, Room 503H, Humphrey Building, 200 Independence Avenue S.W., Washington, D.C., 20201. Written comments should be received within 60 days of this notice.

Dated: August 18, 2000.

Kerry Weems,

Acting Deputy Assistant Secretary, Budget.

[FR Doc. 00–21933 Filed 8–25–00; 8:45 am]

BILLING CODE 4150–24–M

DEPARTMENT OF THE INTERIOR

Fish and Wildlife Service

Notice of Intent To Conduct Public Scoping Meetings To Obtain Suggestions and Information on Issues To Include in the Preparation of Comprehensive Conservation Plans for Cedar Island National Wildlife Refuge in Carteret County, North Carolina, and Pea Island National Wildlife Refuge in Dare County, NC

SUMMARY: This notice advises the public that the U.S. Fish and Wildlife Service intends to gather information necessary

to prepare a Comprehensive Conservation Plan and associated environmental documents for both of these refuges pursuant to the National Environmental Policy Act and implementing regulations.

Meetings for Cedar Island National Wildlife Refuge to be conducted as follows:

Thursday, September 21, 2000, 12 Noon–3 p.m., Duke University Marine Laboratory Auditorium, 135 Duke Marine Lab Road, Beaufort, North Carolina 28516, 910/504–7504

Thursday, September 21, 2000, 6 p.m.–9 p.m., Cedar Island Community Center, 2208 Cedar Island Road, Cedar Island, North Carolina 28520, 910/225–2701

Meetings for Pea Island National Wildlife Refuge to be conducted as follows:

Monday, September 25, 2000, 1 p.m.–4 p.m., 6 p.m.–9 p.m., Rodanthe Community Center, 23186 Myrna Peters Road, Rodanthe, North Carolina 27968, 252/987–2503

Tuesday, September 26, 2000, 1 p.m.–4 p.m., 6 p.m.–9 p.m., North Carolina State Aquarium, 374 Airport Road, Manteo, North Carolina 27954, 252/473–3494, Ext. 258

DATES: Written comments should be received on or before September 27, 2000.

ADDRESSES: Comments and requests for information concerning these refuges may be addressed to: D.A. Brown, M.S., P.W.S., 1106 West Queen Street, P.O. Box 329, Edenton, North Carolina 27932, 252/482–2364, 252/482–3855 (fax), 252/337–5283 (cell).

Information concerning these refuges may be found at the following website: http://rtncf-rci.ral.r4.fws.gov.

If you wish to comment, you may submit your comments by any one of several methods. You may mail comments to the above address. You may also comment via the Internet to the following address: D_A_Brown@fws.gov. Please submit Internet comments as an ASCII file avoiding the use of special characters and any form of encryption. Please also include your name and return address in your Internet message. If you do not receive a confirmation from the system that we have received your Internet message, contact D.A. Brown directly at the above address. Finally, you may hand-deliver comments to Mr. Brown at 1106 West Queen Street, Edenton, North Carolina. Our practice is to make comments, including names and home addresses of respondents, available for public review during regular business hours. Individual respondents may request that we withhold their home address from the rulemaking record, which we will honor to the extent allowable by law. There also may be circumstances in which we would withhold from the rulemaking record a respondent's identity, as allowable by law. If you wish us to withhold your name and/or address, you must state this prominently at the beginning of your comment. However, we will not consider anonymous comments. We will make all submissions from organizations or businesses, and from individuals identifying themselves as representatives or officials of organizations or businesses, available for public inspection in their entirety.

SUPPLEMENTARY INFORMATION: It is the policy of the Fish and Wildlife Service to have all lands within the National Wildlife Refuge System managed in accordance with an approved Comprehensive Conservation Plan. The plan guides management decisions and identifies the goals, objectives, and strategies for achieving refuge purposes. Public input into this planning process is encouraged. The plan will provide other agencies and the public with a clear understanding of the desired conditions of the refuge and how the Service will implement management strategies.

Cedar Island National Wildlife Refuge was authorized by the Migratory Bird Conservation Act (45 Stat. 1222, as amended 16 U.S.C. 715–715d) in August 1964, and Pea Island National Wildlife Refuge was established by Presidential Executive Order 7864 in April 1938. Both were established as a refuge and breeding ground for migratory birds and other wildlife.

Dated: July 24, 2000.

Sam D. Hamilton,

Regional Director.

[FR Doc. 00–19512 Filed 8–25–00; 8:45 am]

BILLING CODE 4310–55–M

DEPARTMENT OF THE INTERIOR

Fish and Wildlife Service

Notice of Intent To Prepare a Comprehensive Conservation Plan (CCP) and Associated Environmental Assessment (EA) for Pierce National Wildlife Refuge (NWR), Franz Lake NWR, and Steigerwald Lake NWR, and Notification of Two Public Scoping Meetings

AGENCY: Fish and Wildlife Service, Interior.

ACTION: Notice of Intent to Prepare a Comprehensive Conservation Plan and Associated Environmental Assessment for Pierce National Wildlife Refuge (NWR), Franz Lake NWR, and Steigerwald Lake NWR, Clark and Skamania Counties, Washington.

SUMMARY: This notice advises the public that the U.S. Fish and Wildlife Service (Service) is preparing a Comprehensive Conservation Plan (CCP) and Environmental Assessment (EA) for Pierce NWR, Franz Lake NWR, and Steigerwald Lake NWR (refuges [collectively]), and announces two public scoping meetings. The refuges are located in the state of Washington, in the Columbia River Gorge, in Clark and Skamania Counties. The Service is furnishing this notice in compliance with Service CCP policy and the National Environmental Policy Act (NEPA) and implementing regulations for the following purposes: (1) To advise other agencies and the public of our intentions; (2) to obtain suggestions and information on the issues to be addressed in the CCP; and (3) to announce public meetings for scoping. It is estimated that the draft CCP and EA will be available for public review in October 2000.

DATES: Two public meetings are scheduled. The dates are September 20 and 21, 2000, see Public Meetings under Supplementary Information in this notice for locations and times. Submit scoping comments on or before October 6, 2000, to the Project Leader, Ridgefield NWR, the address follows.

ADDRESSES: Address comments, requests for more information, or requests to be added to the mailing list for this project to: Project Leader, Ridgefield NWR Complex, P.O. Box 457, Ridgefield, Washington 98642.

FOR FURTHER INFORMATION CONTACT: Tom Melanson, Project Leader, (360) 887–4106.

SUPPLEMENTARY INFORMATION:

Background

The Service initiated development of a management plan for these refuges in 1990 but this planning effort was postponed due to anticipated changes in refuge planning procedure and policy. Two public meetings were held during this period to collect comments and suggestions from the public on how the refuges should be managed. The information obtained from these meetings, as well as new information to be collected during the current project scoping process, will be incorporated into the CCP.

The refuges are located within the Columbia River Gorge National Scenic Area, administered by the U.S. Forest

Service. The Management Plan for the Scenic Area, adopted by the Columbia River Gorge Commission on October 15, 1991, called for the development of ''gateway facilities'' at major entry ways to the Scenic Area. Steigerwald Lake NWR was selected as the northwest gateway. The Service signed a Finding of No Significant Impact on December 23, 1999, for a proposed visitor center (Gateway Center) and interpretive trail at Steigerwald Lake NWR to accommodate wildlife-associated recreation, interpretation, and environmental education. Development of the Gateway Center, parking lot, interpretive trail, and associated infrastructure will not be addressed in the CCP. Construction will begin when Congress allocates funding for the project.

Current Planning Effort

The Service is beginning the process of developing a 15-year management plan for Pierce NWR, Franz Lake NWR, and Steigerwald Lake NWR. The plan will include the following topics: (1) Significant problems adversely affecting resources within the refuges; (2) long-term goals, objectives and strategies for the refuges, consistent with the National Wildlife Refuge System mission and other legal mandates; (3) compatible public uses of the refuges, including but not limited to wildlife observation and photography, environmental education and interpretation, and hiking; and (4) refuge facility, staffing and maintenance requirements.

Preliminary Issues

The following preliminary issues and questions have been identified and will be addressed in the CCP. Additional issues will be identified during public scoping.

1. How should the Service manage exotic and invasive plants and animals? Invasive species are non-native organisms possessing a fast reproductive rate and ability to spread rapidly. Invasive species reduce native plant and animal diversity by out-competing natives for space and resources. While all three refuges support non-native species, not all non-native species are considered invasive. Several exotic species of ''tame'' pasture grass are actively managed to provide browse for geese and other waterfowl. The invasive plant species of greatest concern for the refuges include Himalayan blackberry, reed canarygrass, tansy, leafy spurge, Canada thistle, and knapp weed. Invasive species of wildlife on the refuges include bullfrogs, nutria, and warm-water fish such as carp and bass. Bullfrogs, which were originally introduced to the western states from the east, are voracious predators of native amphibians and reptiles. There are a number of other non-native species in the Columbia River that have a high potential to invade the refuges. Although it may be impossible to eliminate invasive species from the refuges, measures can be taken to reduce their impact and prevent further invasions. Certain invasive species can be controlled using mechanical, chemical, and biological methods. Tansy and Canada thistle can be spot-treated with herbicides. Non-native fish and the eggs and tadpoles of bullfrogs can be controlled by seasonal drainage of ponds. Adult bullfrogs can be intensively harvested to reduce local populations. While these measures have proven to be effective, they are labor intensive, costly, and can have unintended short-term impacts to native species.

2. What management actions should be taken to protect and restore aquatic resources, particularly rare and declining species? Surface water is a common feature to all three refuges. The numerous springs, streams, sloughs, and ponds provide important habitat for a great variety of native wildlife, including rare and declining species. Pierce NWR supports one of only three remaining runs of chum salmon in the lower Columbia River. In addition to chum, a small run of coho and a few remnant fall chinook and steelhead also spawn in Hardy Creek, although upstream migration is precluded by concrete culverts on the creek at State Highway 14 and the Burlington Northern Railroad. Adult coho salmon, winter steelhead, Pacific lamprey, and river lamprey return to Gibbons Creek at Steigerwald Lake NWR to spawn in the upper watershed, which also supports resident cutthroat trout. The refuges also provide important habitat for pond breeding amphibians and reptiles such as Western toad and painted turtle. Aquatic resources are threatened by invasive species and impacts to water quality resulting from development in the watershed above the refuges.

3. How should the Service manage wetlands and what should be the role of water level manipulations in this management? Protection of riverine wetlands such as Franz and Arthur Lakes and Hardy Slough provides partial mitigation for the extensive loss of tidally influenced wetlands resulting from the construction of hydroelectric projects on the Columbia River. Releases from Bonneville Dam cause water levels in these wetlands to fluctuate widely, and the Columbia River levee prevents seasonal flooding of bottomland habitat at Steigerwald Lake NWR. The refuges partially compensate for these impacts by constructing and operating internal levees and water control structures. Certain areas of Steigerwald Lake NWR and Pierce NWR are seasonally flood irrigated to improve goose browse, control invasive species, and enhance wildlife production. Additional measures could be taken to improve the water supply and delivery system (*e.g.,* drill wells and construct pipelines). However, the diverse and possibly conflicting needs of multiple species must be considered.

4. What opportunities exist to restore riparian areas on the refuges? Riparian areas on the refuges have been substantially altered from their historic condition as a result of cattle grazing, land clearing, stream diversions, levee construction and hydroelectric projects. Restoration of degraded riparian areas has included such actions as fencing out cattle, relocating roads, and planting buffer strips. Extreme fluctuations in water elevations resulting from operation of Bonneville Dam continue to cause bank erosion. Similar impacts occur from wave action caused by traffic on the Columbia River. Water temperatures are elevated in some stream reaches due to inadequate amounts of shade.

5. How should the Service manage upland vegetation to benefit wildlife resources? Upland areas of the refuges support mixed coniferous and hardwood forests and grasslands. Historic land uses, especially logging and ranching, resulted in conversion of bottom land forest to pasture. These grasslands today consist primarily of introduced pasture grasses and exotics. The forest understory consists of native and non-native species. The Indian Mary Creek watershed above State Highway 14 is heavily forested. Grassland management consists of weed control, haying or mowing, grazing and other pasture improvements as necessary for production of goose browse. Riparian hardwoods have been planted in some areas to restore bottomland forest cover.

6. Does the public desire access to the refuges? What opportunities exist to open the refuges to compatible public uses, and how should these uses be managed to protect refuge resources? The refuges are located in the Columbia River Gorge National Scenic Area. Steigerwald Lake NWR is one of four designated ''gateways'' to the Scenic Area. In establishing the Scenic Area, Congress intended federal, state and local governments to work cooperatively ''to protect and provide for the enhancement of the scenic, cultural,

recreational and natural resources of the Columbia River Gorge.'' Recreation, while given equal weight in Scenic Area directives, must be compatible with the refuges' purposes for inclusion in refuge programs. Currently, the refuges are closed to public use with the exception of requested staff-led tours. Construction of the Gateway Center and interpretive trail was approved in December of 1999, and will commence at Steigerwald Lake NWR in the near future. Opportunities to provide similar public uses at Franz Lake NWR and Pierce NWR are limited by access across a busy railroad track. With any increase in human visitation, the potential for disturbance to wildlife and the incidence of trespass, vandalism, and littering is anticipated to increase.

Public Comments

With the publication of this notice, the public is encouraged to attend public meetings and submit written comments for staff to consider in developing the CCP. Comments received shall be used to identify issues and draft preliminary alternatives. Comments already received are on record and need not be resubmitted.

All comments received from individuals on Environmental Assessments and Environmental Impact Statements become part of the official public record. Requests for such comments will be handled in accordance with the Freedom of Information Act, the Council on Environmental Quality's NEPA regulations [40 CFR 1506.6(f)], and other Service and Departmental policy and procedures. When requested, the Service generally will provide comment letters with the names and addresses of the individuals who wrote the comments. However, the telephone number of the commenting individual will not be provided in response to such requests to the extent permissible by law. Additionally, public comment letters are not required to contain the commentator's name, address, or other identifying information. Such comments may be submitted anonymously to the Service.

The environmental review of this project will be conducted in accordance with the requirements of the National Environmental Policy Act of 1969, as amended (42 U.S.C. 4321 *et seq.*), NEPA Regulations (40 CFR 1500–1508), other appropriate Federal laws and regulations, the National Wildlife Refuge System Improvement Act of 1997, and Service policies and procedures for compliance with those regulations.

Public Meetings

Two public scoping meetings will be held in September. Dates, locations, and times follow. The format will be a presentation on the planning process and the refuges followed by facilitated discussions to gather public comments. The dates, times, and locations of the public meetings follow.

September 20, 2000, 7 pm to 9 pm, Jemtegaard Middle School, 35300 Evergreen Blvd., Washougal, Washington.

September 21, 2000, 7 pm to 9 pm, Rock Creek Center, 710 SW Rock Creek Drive, Stevenson, Washington.

Dated: August 21, 2000.

Don Weathers,

Acting Regional Director, Region 1, Portland, Oregon.

[FR Doc. 00–21863 Filed 8–25–00; 8:45 am]

BILLING CODE 4310–55–P

DEPARTMENT OF THE INTERIOR

Bureau of Indian Affairs

Request for Comments on Land Acquisitions Information Collection

AGENCY: Bureau of Indian Affairs, Interior.

ACTION: Notice of information collection request renewal.

SUMMARY: In compliance with the Paperwork Reduction Act of 1995 (44 U.S.C. 3501 *et seq.*), the Bureau of Indian Affairs (BIA) invites comments on the information collection request which will be renewed. The collection is: 25 CFR 151 Land Acquisitions, 1076–0100.

DATES: Comments must be received on or before October 27, 2000 to be assured of consideration.

ADDRESSES: Submit comments to Terrance L. Virden, Bureau of Indian Affairs, Director, Office of Trust Responsibilities, MS–4513/MIB/Code 200, 1849 C Street, NW., Washington, DC 20240, telephone (202) 208–5831.

FOR FURTHER INFORMATION CONTACT: Interested persons may obtain copies of the information collection requests without charge by contacting Terrance L. Virden at (202) 208–5831, or by facsimile at (202) 219–1255.

SUPPLEMENTARY INFORMATION: Interested persons may submit written comments regarding this information collection request to the location identified in the **ADDRESSES** section of this document. Our practice is to make comments, including names and home addresses of respondents, available for public review during regular business hours. Individual respondents may request confidentiality. If you wish to request that we consider withholding your name, street address, and other contact information (such as Internet address, FAX, or phone number) from public review or from disclosure under the Freedom of Information Act, you must state this prominently at the beginning of your comment. We will honor your request to the extent allowable by law. However, we will not consider anonymous comments. We will make all submissions from organizations or businesses, and from individuals identifying themselves as representatives or officials of organizations or businesses, available for public inspection in their entirety.

The Paperwork Reduction Act of 1995 provides an opportunity for interested parties to comment on proposed information collection requests. This collection covers 25 CFR 151 as presently approved. It is not tied to the proposed rulemaking. We must keep this active to allow lands into trust requests to be honored. The Bureau of Indian Affairs, Division of Real Estate Services, is proceeding with this public comment period as the first step in obtaining a normal information collection clearance from OMB. The request contains (1) Type of review, (2) title, (3) summary of the collection, (4) respondents, (5) frequency of collection, (6) reporting and record keeping requirements, (7) reason for response.

Title: 25 CFR—Land Acquisitions.

Type of review: Extension of a currently approved collection.

Summary: The Secretary of the Interior has statutory authority to acquire lands in trust status for individual Indians and federally recognized Indian tribes. The Secretary requests information in order to identify the party(ies) involved and a description of the land in question. Respondents are Native American tribes or individuals who request acquisition of real property into trust status. The Secretary also requests additional information necessary to satisfy those pertinent factors listed in 25 CFR 151.10 or 151.11. The information is used to determine whether or not the Secretary will approve an applicant's request. No specific form is used, but respondents supply information and data, in accordance with 25 CFR 151, so that the Secretary may make an evaluation and determination in accordance with established Federal factors, rules and policies.

Frequency of Collection: One Time.

Description of Respondents: Native American Tribes and Individuals

desiring acquisition of lands in trust status.

Total Respondents: 9,200.

Total Annual Responses: 9,200.

Total Annual Burden Hours: 36,800 hours.

Reason for response: Required to obtain or retain benefits.

The Bureau of Indian Affairs solicits comments in order to:

(1) Evaluate whether the proposed collection of information is necessary for the proper performance of the functions of the bureau, including whether the information will have practical utility;

(2) Evaluate the bureau's estimate of the burden of the proposed collection of information, including the validity of the methodology and assumptions used;

(3) Enhance the quality, utility, and clarity of the information to be collected; and

(4) Minimize the burden of the collection of information on those who are to respond. Any public comments will be addressed in the Bureau of Indian Affairs' submission of the information collection request to the Office of Management and Budget.

Dated: August 21, 2000.

Kevin Gover,

Assistant Secretary—Indian Affairs.

[FR Doc. 00–21861 Filed 8–25–00; 8:45 am]

BILLING CODE 4310–02–P

DEPARTMENT OF THE INTERIOR

Bureau of Indian Affairs

Proposed Agency Information Collection Activities; Comment Request

AGENCY: Bureau of Indian Affairs, Interior.

ACTION: Notice.

SUMMARY: This notice announces that the Information Collection Request for the Payment for Appointed Counsel in Involuntary Indian Child Custody Proceedings in State Courts has been submitted to OMB for review and renewal.

DATES: Written comments must be submitted on or before September 27, 2000.

ADDRESSES: Written comments may be directed to the Desk Officer for the Department of the Interior at: Office of Information and Regulation, Office of Management and Budget, Docket Library, Room 10102 725 17th Street, NW, Washington, DC 20503. A copy of all written comments should be sent to Chester J. Eagleman, Sr., Bureau of Indian Affairs (Bureau), Department of the Interior, 1849 C Street, NW, Washington, D.C. 20503.

FOR FURTHER INFORMATION CONTACT: Requests for additional information should be directed to Chester J. Eagleman, Sr., 202–208–2721 (This is not a toll-free number).

SUPPLEMENTARY INFORMATION:

I. Abstract

A state court that appoints counsel for an indigent Indian parent or Indian custodian in an involuntary Indian child custody proceeding in a State court may send written notice to the Bureau of Indian Affairs (Bureau) when appointment of counsel is not authorized by State law. The cognizant Bureau Regional Director uses this information to decide whether to certify that the client in the notice is eligible to have his counsel compensated by the Bureau in accordance with the Indian Child Welfare Act, Public Law 95–608.

On May 16, 2000, the Department of the Interior published a notice in the **Federal Register** (65 FR 31186) requesting public comments on the proposed information collection. The comment period ended July 17, 2000. No comments were received.

II. Method of Collection

The following information is collected in a notice from State courts in order to certify payment of appointed counsel in involuntary Indian child custody proceedings. The information collection is submitted to obtain or retain a benefit; i.e., payment for appointed counsel: the reason for the collection are listed in the following table:

Information collected	Reason for collection
(a) Name, address and telephone number of attorney appointed	(a) To identify attorney appointed as counsel and method of contact.
(b) Name and address of client for whom counsel is appointed	(b) To identify indigent party in an Indian child custody proceeding for whom counsel is appointed.
(c) Applicant's relationship to child	(c) To determine if the person is eligible for payment of attorney fees as specified in Public Law 95–608.
(d) Name of Indian child's tribe	(d) To determine if the child is a member of a federally recognized tribe and is covered by the Indian Child Welfare Act (ICWA).
(e) Copy of petition or complaint	(e) To determine if this custody proceeding is covered by the ICWA.
(f) Certification by the court that State law does not provide for appointment of counsel in such proceedings.	(f) To determine if other State laws provide for such appointment of counsel and to prevent duplication of effort.
(g) Certification by the court that the Indian client is indigent	(g) To determine if the client has resources to pay for counsel.
(h) The amount of payments due counsel utilizing the same procedures used to determine expenses in juvenile delinquency proceedings.	(h) To determine if the amount of payment due appointed counsel is based on State court standards in juvenile delinquency proceedings.
(i) Approved vouchers with court certification that the amount requested is reasonable considering the work and the criteria used for determining fees and expenses for juvenile delinquency proceedings..	(i) To determine the amount of payment considered reasonable in accordance with State standards for a particular case.

Proposed use of the information: The information collected will be used by the respective Bureau Regional Director to determine:

(a) If an individual Indian involved in an Indian child custody proceeding is eligible for payment of appointed counsel's attorney fees;

(b) If any State statutes provide for coverage of attorney fees under these circumstances;

(c) The State standards for payment of attorney fees in juvenile delinquency proceedings; and,

(d) The name of the attorney, and his actual voucher certified by the court for the work completed on a preapproved case. This information is required for payment of appointed counsel as authorized by Public Law 95–608.

III. Data

(1) *Title of the Collection of Information:* Department of the Interior, Bureau of Indian Affairs, Payment for Appointed Counsel in Involuntary Indian Child Custody Proceedings in State Courts.

OMB Number: 1076–0111.

Expiration Date: August 31, 2000.

Type of Review: Extension of a currently approved collection.

Affected Entities: State courts and individual Indians eligible for payment of attorney fees pursuant to 25 CFR 23.13 in order to obtain a benefit.

Estimated number of respondents: 4.

Proposed frequency of response: 1.

(2) *Estimate of total annual reporting and record keeping burden that will result from the collection of this information:* 12 hours.

Reporting: 2 hours per response × 4 respondents = 8 hours.

Recordkeeping: 1 hour per response × 4 respondents = 4 hours.

Estimated Total Annual Burden Hours: 12 hours.

Estimated Annual Costs: $540.00 (12 hours × $45.00 per hour).

(3) *Description of the need for the information and proposed use of the information:* Submission of this information is required in order to receive payment for appointed counsel under 25 CFR 23.13. The information is collected to determine applicant eligibility for services.

IV. Request for Comments

The Department of the Interior invites comment on:

(a) Whether the collection of information is necessary for the proper performance of the functions of the agency, including whether the information will have practical utility;

(b) The accuracy of the agencies' estimate of the burden (including hours and cost) of the proposed collection of information, including the validity of the methodology and assumptions used;

(c) Ways to enhance the quality, utility, and clarity of the information to be collected; and

(d) Ways to minimize the burden of the collection of information on those who are to respond, including through the use of appropriate automated, electronic, mechanical, or other collection techniques or other forms of information technology.

Burden means the total time, effort, or financial resources expended by persons to generate, maintain, retain, or disclose or provide information to or for a federal agency. This includes the time needed to review instructions; to develop, acquire, install and utilize technology and systems for the purpose of collecting, validating, and verifying information, processing and maintaining information, and disclosing and providing information; to train personnel and to be able to respond to a collection of information, to search data sources, to complete and review the collection of information; and to transmit or otherwise disclose the information.

The comments, names and addresses of commenters will be available for public view during regular business hours. If you wish us to withhold this information, you must state this prominently at the beginning of your comment. We will honor your request to the extent allowable by law.

An agency may not conduct or sponsor, and a person is not required to respond to a collection of information unless it displays a currently valid Office of Management and Budget control number.

Dated: August 9, 2000.

Kevin Gover,

Assistant Secretary—Indian Affairs.

[FR Doc. 00–21928 Filed 8–25–00; 8:45 am]

BILLING CODE 4310–02–P

DEPARTMENT OF THE INTERIOR

Bureau of Land Management

(AZ030–1610–HN–00; AZA–31069)

Notice of Availability of Cane Springs Land Exchange Environmental Assessment/Plan Amendment and; Notice of Realty Action.

AGENCY: Bureau of Land Management, Department of the Interior.

ACTION: Notice of availability and notice of realty action.

SUMMARY: Pursuant to section 206 of the Federal Land Policy and Management Act of 1976 (43 U.S.C. 1716), as amended and section 102(2)(C) of the National Environmental Policy Act of 1969 and the Federal Land Policy and Management Act of 1976, the Bureau of Land Management, Kingman Field Office, Arizona, has prepared an Environmental Assessment (EA)/Plan amendment to analyze the effect of a proposed land exchange and a proposed plan amendment to the Kingman Resource Management Plan. The EA addresses the effects of a proposal to exchange approximately 17,500 acres of public land for approximately 18,000 acres of private land. The proposed land exchange is entirely within Mohave County, Arizona. The amendment is needed because the Proponent selected public lands that were not identified for disposal through exchange in the Kingman Resource Management Plan. It is proposed to amend the Kingman Resource Management Plan to change 478.11 acres located in Lots 1, 2, NE1/4, E1/2NW1/4, SE1/4 of section 31 in Township 22 North, Range 18 West from available for disposal through Recreation and Public Purpose Uses to available for disposal through exchange. There would be 158.25 acres in Lots 3,4, E1/2SW1/4 of section 31 of Township 22 North, Range 18 West for Recreation and Public Purpose Uses.

The Realty Action is in accordance with sections 1 and 7 of the Taylor Grazing Act, 43 U.S.C. 315 and 315f, the selected public lands described in the EA are hereby classified for disposal by exchange.

DATES: Written protests on the proposed plan amendment must be postmarked no later than September 27, 2000.

Plan Protest Procedures:

The BLM's planning process includes an opportunity for administrative review via a plan protest to the BLM Director. This plan protest procedure is only applicable to the proposed plan amendment.

The protest must specifically address the proposal to change 478.11 acres of land classified as available for disposal through Recreation and Public Purpose uses to a classification of available for disposal through exchange. Currently, no decision has been made on the overall exchange, so the exchange itself cannot be protested. Only the proposal to amend the Kingman RMP can be protested. To protest the proposed plan amendment, file a letter of protest with: Director, Bureau of Land Management, Attention: Ms. Brenda Williams, Protests Coordinator, WO–210/LS–1075, Department of the Interior, Washington, DC 20240.

The overnight mail address is: Director, Bureau of Land Management Attention: Ms. Brenda Williams, Protests Coordinator (WO–210) 1620 L Street NW, Room 1075, Washington, DC 20036.

To expedite consideration, in addition to the original sent by mail or overnight mail, a copy of the protest may be sent by fax to (202) 452–5112 or e-mail to bhudgens@wo.blm.gov.

WO–210 will immediately acknowledge receipt of the protest and fax/e-mail a copy to the appropriate BLM State Director and the assigned field support staff. Protests filed late or filed with the BLM State Director or district, field or area manager shall be rejected by the BLM Washington Office (WO–210).

At minimum, the letter of protest must contain the following information.

1. The name, mailing address, telephone number and interest of the person filing the protest.

2. A statement of which parcel or parcels (by township, range and section) are being protested.

3. A copy of each document addressing the parcels proposed to be categorized as disposal lands, such as letters sent during the plan amendment

process that addresses parcels within the proposed plan amendment.

4. A statement of reasons why the BLM State Director's proposed decision to place the lands in the disposal category is believed to be incorrect. All relevant facts need to be included in the statement of reasons. These facts, reasons and documentation are very important to understand the protest rather than merely expressing disagreement with the proposed decision.

ADDRESSES: Copies of the document are available at the following locations: Bureau of Land Management, Kingman Field Office, 2475 Beverly Ave., Kingman, Arizona, 86401–3629 and Bureau of Land Management, Arizona State Office, 222 North Central Avenue, Phoenix, Arizona 85004–2203.

FOR FURTHER INFORMATION CALL: Don McClure, phone: (520) 692–4400.

SUPPLEMENTARY INFORMATION: The land exchange includes both public and non-public land in Mohave County in northwestern Arizona, encompassing approximately 35,500 acres. Issues that have been addressed are ranching, biological resources, recreation/access, soil erosion, cultural resources, realty, riparian areas, mineral resources, and Proposed modifications to the Kingman Resource Management Plan have been integrated with the proposed Land Exchange, and the impacts presented in a single EA-level analysis.

John R. Christensen,

Field Manager, Kingman Field Office.

[FR Doc. 00–21865 Filed 8–25–00; 8:45 am]

BILLING CODE 4310–22–P

DEPARTMENT OF THE INTERIOR

Bureau of Land Management

[CA–320–1820–XQ]

Resource Advisory Council Meeting: Northwest California Resource Advisory Council, Redding, CA

AGENCY: Bureau of Land Management, Interior.

ACTION: Notice of meeting.

SUMMARY: Pursuant to the authorities in the Federal Advisory Committees Act (Pub. L. 92–463) and the Federal Land Policy and Management Act (Pub. L. 94–579), the U. S. Bureau of Land Management's Northwest California Resource Advisory Council will meet Wednesday, Sept. 20, 2000, for a regular business meeting. The meeting is open to the public.

SUPPLEMENTARY INFORMATION: The meeting begins at 10 a.m. in the Conference Room of the BLM's Redding Field Office, 355 Hemsted Drive, Redding, CA. Items on the agenda include discussion of a feasibility study for Lake Berryessa management, an update on Headwaters Forest Reserve management, management issues in the Knoxville Off Highway Vehicle Area, and standards and guidelines for rangeland health. Time will be set aside at 1 p.m. for public comments. Depending on the number of persons wishing to speak, a time limit may be established.

FOR ADDITIONAL INFORMATION: Contact Lynda J. Roush, BLM Arcata Field Manager, at (707) 825–2300.

Joseph J. Fontana,

Public Affairs Officer.

[FR Doc. 00–21867 Filed 8–25–00; 8:45 am]

BILLING CODE 4310–40–P

DEPARTMENT OF THE INTERIOR

Bureau of Land Management

[CA–660–00–1220–HA]

Restrictions on Use of Public Lands and Facilities

AGENCY: Bureau of Land Management, Department of the Interior, Palm Springs-South Coast Field Office, Desert District, California.

ACTION: Notice—Temporary closure of routes to use by motorized vehicles except as specifically exempted; temporary closure of certain public lands to motorized-vehicle use except on approved routes.

SUMMARY: In compliance with Title 43 Code of Federal Regulations (CFR), Subpart 8364.1(c), notice is hereby given that the Bureau of Land Management (BLM) is temporarily closing public land portions of Palm Hills Drive, also known as Dunn Road, to motorized vehicles. The public land portions of Palm Hills Drive subject to the temporary closure occur within E½ Section 5, W½ Section 8, Sections 16, 29, 32, and 33, Township 5 South, Range 5 East, San Bernardino Meridian (SBM); and Sections 4, 8, 9, and N½ Section 16, Township 6 South, Range 5 East, SBM. The BLM is also temporarily closing all other motorized-vehicle routes of travel on these public lands and Section 30, Township 5 South, Range 5 East, SBM. The following motorized vehicles are exempt from this order: (1) Fire, military, emergency or law enforcement vehicles when used for emergency or patrol purposes; (2) vehicles whose use is expressly authorized by the Authorized Officer; and (3) vehicles used for official purposes by employees, agents, or designated representatives of the Federal Government or one of its contractors. These restrictions shall be in effect year-round from October 1, 2000, until completion of the Coachella Valley Multiple Species Habitat and Natural Communities Conservation Plan which addresses motorized-vehicle use on the subject public lands. The designation criteria at 43 CFR 8342.1 were applied in establishing this temporary closure order. The order to temporarily close Palm Hills Drive and other routes to motorized vehicles is based on protection of the resources of the public lands, promotion of the safety of all users of the public lands, and minimization of conflicts among various uses of the public lands. Non-motorized uses of Palm Hills Drive (*e.g.,* hiking, bicycling, horseback riding) and other routes on public lands are not affected by this order. Trails developed primarily for non-motorized use are also not affected by the temporary closure.

SUPPLEMENTARY INFORMATION: Palm Hills Drive traverses the northern Santa Rosa Mountains from Cathedral City Cove on the north to State Highway 74 on the south, within and beyond an area annexed by the City of Palm Springs. The road was constructed by Mr. Michael Dunn and his partners beginning in 1966, and use of Palm Hills Drive was controlled by Mr. Dunn by maintaining two locked gates situated on private land. Those portions of Palm Hills Drive that cross public lands were constructed absent proper authorization from the BLM. The BLM filed a civil suit in Federal District Court in 1968 after negotiations to settle the unauthorized use failed. In 1975, a Final Judgement was entered between the BLM and Mr. Dunn resolving the dispute. The Court found that Mr. Dunn did not hold an easement by way of necessity across public lands at any time, and Mr. Dunn renounced any claim to any such easement. In 1997, the BLM acquired the private land upon which the two locked gates are located. The only other gate controlling access at this time is located on U.S. Forest Service lands near the opposite end of the road.

On March 18, 1998, the U.S. Fish and Wildlife Service (USFWS) declared through publication of a final rule that the distinct vertebrate population segment of bighorn sheep occupying the Peninsular Ranges of southern California is endangered pursuant to the Endangered Species Act of 1973, as amended. The current population of bighorn sheep in the United States,

Peninsular Ranges approximates 335 animals distributed in eight known ewe groups (subpopulations) from the San Jacinto Mountains south to the Mexican border.

In *Draft Recovery Plan for the Bighorn Sheep in the Peninsular Ranges* (USFWS 1999), several studies are identified that link vehicle use with modification of bighorn sheep behavior (Jorgensen 1974, Leslie and Douglas 1980, Campbell and Remington 1981, Miller and Smith 1985). Miller and Smith (1985) documented that 25% of bighorn sheep (45 out of 180 observations) immediately reacted to a parked jeep or truck either by walking away or trotting away and returning to their original activity within 10 minutes, or by running away from the area and not returning to their original activity. Jorgensen (1974), Leslie and Douglas (1980), and Campbell and Remington (1981) demonstrated behavioral reactions or change in use patterns due to vehicle use and other human activity at water sources. Similarly, the mere presence of roads, both paved thoroughfares with heavy traffic and off road vehicle dirt roads, may be associated with altering bighorn sheep use patterns (Hicks 1978; Cunningham 1982; Rubin *et al.* 1998). Human activities on roads, such as hiking with or without dogs, biking, hunting, and traffic volume and speed, are likely factors that influence bighorn sheep use patterns near roads (MacArthur 1979, Miller and Smith 1985, Krausman and Leopold 1986, King and Workman 1986).

The temporary closure of Palm Hills Drive and other routes on the subject public lands is intended to minimize the potential for adverse changes in bighorn sheep behavior due to motorized-vehicle use. Any person who fails to comply with this order may be subject to the penalties provided in 43 CFR 8360.0–7.

FOR ADDITIONAL INFORMATION CONTACT: Jim Foote, BLM, Palm Springs-South Coast Field Office, P.O. Box 1260, North Palm Springs, CA 92258, telephone 760–251–4836.

Dated: August 21, 2000.

James G. Kenna,

Field Manager.

[FR Doc. 00–21864 Filed 8–25–00; 8:45 am]

BILLING CODE 4310–40–P

DEPARTMENT OF THE INTERIOR

Bureau of Land Management

[MT–010–1220–DA]

Montana Off-Road Vehicle Designation

AGENCY: Bureau of Land Management, Department of the Interior.

ACTION: Notice to limit off-road vehicle use on public lands.

SUMMARY: Notice is hereby given that motorized vehicle use is limited to designated roads on public lands within the following block management areas. This will be in effect during the hunting season as established by the Montana Department of Fish, Wildlife, and Parks.

Designation and Location

All motorized vehicles will be limited to designated open roads on public lands during hunting season.

Derks Ranch

T. 4 N. R. 32 E.,
Sec 12, E2
T.4 N. R.33 E.,
Sec 7. All public land north of the Yellowstone River.
All established roads are open.

Downs

T. 10 N., R. 25 E.,
Sec 22 NESE, NE, NENW;
Sec 25 E2;
Sec 26 NESE, N2.

Gage Dome

T. 9 N., R. 25 E.,
Sec 4, W2;
Sec 10, ALL; and
Sec 12, S2.
T. 10 N., R. 25 E.,
Sec 34, S2.
T. 9 N., R. 26 E.,
Sec 1 ALL;
Sec 2 SENE, N2NE, NENW;
Sec 3 ALL;
Sec 8, SE4;
Sec 11 ALL;
Sec 12, S2SE, N2, S2SW;
Sec 13, 14, 15, 17, ALL;
Sec 18, NW4;
Sec 20, SE4;
Sec 21 ALL;
Sec 22 SW4;
Sec 28 SE4NE4, E2SW; and
Sec 30 E2.
T. 10 N. R. 26 E.,
Sec 4 NW;
Sec 6 NENE; and
Sec 32 SE4, NE4, N2NW, SENW, SW4 T.11 N. R.26 E.,
Sec 14 ALL;
Sec 15 E2;
Sec 17 ALL;
Sec 18 S2;
Sec 19 ALL
Sec 20 ALL;
Sec 22 S2;
Sec 24 SWNW;
Sec 26 SE4;
Sec 27,28,29 ALL;
Sec 30 NW4, S2S2;
Sec 31,32,33 ALL;
Sec 34 S2
T. 9 N., R. 27 E.,
Sec 6 NE4, E2NW, E2SW;
Sec 7 NW4
T. 10 N., R. 27 E.,
Sec 4 ALL;
Sec 6 E2NE, W2NW.

Roads designated open are as follows : County roads—Alec Roy, Gage Dome, Griffith, Colony, and Big Wall.

Seven other roads designated open are: Colony road in section17 heading southward and terminating at a fence line. A second road coming off Colony road in Sec 14 proceeding southward approximately one mile to a road closed sign. The Crook Creek Spur road originating at the Alec Roy road in Sec 31 and proceeding eastward approximately 2.5 miles ending at a fence line.

The North Spur road originating at the Crooked Creek Spur road in Sec 32 and proceeding northward approximately 1.5 miles to a road closed sign. The Gage Dome road in Sec 21 proceeding southward approximately one mile to a road closed sign. The Gage Dome road in Sec 15 running approximately .5 mile northward to a road closed sign. The last road originating at the Gage Dome road in Sec 13 and running approximately one mile northward to a road closed sign.

Graves Ranch

T. 10 N., R. 25 E.,
Sec 5—Public land west of Highway 87;
Sec 6, S2; and
Sec 7 ALL;
T. 10 N., R. 24 E.,
Sec 2 W2; and
Sec 12 E2NE, SWNE;
T. 11 N., R. 24 E.,
Sec 4 E2SE, SWNW, SW;
Sec 5 SESE, E2NE, SWNE, S2NW, NWNW, SWSW;
Sec 6 ALL;
Sec 7 NWSE, NENE, E2NENW, N2SW;
Sec 8 SE, NW, E2SW;
Sec 20, N2;
Sec 25 W2SE, NENE, W2NE, E2NW, SWNW, SW4;
Sec 35 E2SE, NWSE, SENE, W2NE, E2NW, NWNW, SW4
T. 11 N., R. 25 E.,
Sec 32 Public land west of Hwy 87.

Roads designated open are as follows: County roads—The Snowy Mountain and Graves roads.

Other roads designated open that are not county roads are as follows: That portion of the road through public land starting in T.11 N., R.24 E. Sec 5 and proceeding westward approximately 2 miles. The cut-off road starting in T.11 N., R.24 E. Sec 7 proceeding northward approximately 1 mile. That portion of the road through public land starting in T.11 N., R.24 E., Sec 8 proceeding westward two miles. That portion of the Graves cut-off road that runs across public land. That portion of the road across public land starting at Hwy 87 going southward to the Graves cut-off road.

Grewell Ranch

T. 3 S., R. 24 E.,
Sec 21 NWSE;
Sec 27 NWNW;
Sec 28 N2SE, E2NE, SWNE, E2SW; and
Sec 32 SWSE, N2SE, SWNE.

Grove Creek:

T. 8 S., R. 20 E.,
Sec 25 & 26 S4;
Sec 35 All public land
T. 8 S., R.21 E.,
Sec 30 S4;
Sec 32 S2
T. 9 S., R.20 E.,
Secs 1,12,13,14,24 and 26 All public land
T. 9 S., R 21 E.,
Secs 1, 2, 3, 4, 5, 6, 7, 8, 9, 10, 11, 12, 15, 17, 18, 20, 21, 22, 23, 24, 25, 27, 28,29,30,31,32, and 33 All public land
T. 9 S., R. 22 E.,
Secs 6, 7, 8 and 18 All public land within the Management Area.

Roads designated open are as follows: County roads—Grove Creek to the Grove Creek ranch, all of Meteetsee Trail, and all of Robinson Draw.

Other roads designated open are: That portion of Ruby Creek road beginning in T. 9S., R. 21E., Sec 20 proceeding northeasterly to the west boundary line of Sec 13; that portion of Mill Draw road beginning in T. 9S., R. 21E., Sec 13 to the west boundary line of T. 9S., R. 21E., Sec 22; that portion of the Gold Creek Spring road on the north boundary line of Sec 6 to the spring in Sec 6; South Grove Creek road in T. 8S., R. 20E., Sec 35; and Oil Pad road beginning with the junction of Grove Creek Ranch road proceeding northeasterly approximately 1¼ miles to an old oil pad.

Janich Ranch:

T. 5 N., R. 27 E.,
Sec 6 E2;
Sec 7 ALL;
Sec 8 NWSE, NENE, W2NE, NW, SW
Sec 19 & 20 ALL;
Sec 30 SE, S2NE;
Sec 31 ALL;
Sec 32 W2

Roads designated open are as follows: That portion of the East Ford road through public land starting in T.4N., R.27E., Sec 5 proceeding northward 6.5 miles to the junction of the Old Divide road.

Keebler

T. 4 N., R. 24 E.,
Sec 1 E2NE
T. 4 N., R. 25 E.,
Sec 6 W2SWNW, W2SW;
Sec 7 W2SE, SWNE, E2NW, SWNW, SW, Lots 1, 2, 3, and 4;
Sec 18 SESE

Lone Indian Ranch

T. 1 N., R. 16 E.,
Sec 2 S2SE, N2NE, N2NW, S2SW;
Sec 10 SENE, N2NE, N2NW;
Sec 12 NW, N2SW
T. 2 N., R. 16 E.,
Sec 26 SE, S2NE, S2NW, SW;
Sec 34 NE, NW

Roads designated open are as follows: That portion of Sam's Creek road that crosses public land.

Pole Creek

T. 9 N., R. 23 E.,
Sec 1, SEN2;
Sec 2 NWSE, NW4, NESW;
Sec 4 S2;
Sec 8 N2NE, N2NW;
Sec 9, S2;
Sec 12 SWSE, E2SE, W2NW, W2SW, SESW;
Sec 24 NW4, SWSW; and
Sec 25 ALL
T. 9 N., R. 24 E.,
Sec 28 N2NW
T. 10 N., R. 23 E.,
Sec 13, 15, 23, 25, 26, 27, and 35 ALL;
Sec 14 NE4, NW4, SW4;
Sec 22 SE4;

All public land in Sec 24; Sec 30 N2, SW4; and
Sec 34 E2

T. 10 N., R. 24 E.,
Sec 17 NE4, E2NW;
Sec 18 W2;
Sec 19 and 29 ALL,
Sec 20 SE4, W2NW, SENW, SW4;
Sec 21 E2;
Sec 28 E2, SESW

Roads designated open are as follows: County roads—Lake Mason, Pole Creek, Golf Course, and Snowy Mountain.

Other roads designated open are as follows: The road existing on the south boundary of T.10 N., R.24 E., Sec 30 that runs for one mile. That portion of a road on BLM that starts at the junction of the Grazing District and Lake Mason roads and runs westward three miles, then northward for approximately three miles. The road in T.10 S., R.24 E., Sec 19 coming off Lake Mason road running northwest for over a mile. That portion of the road that exists on BLM and runs on the north boundary of T.9 N., R.24 E., Sec 24.

Tilstra Ranch

T. 7 S., R.24 E.,

All public lands in the below listed sections within the Cooperative Management Area (CMA): Secs 17, 18, 19, 20, 21, 29, 30, 31 and 32

Roads designated open are as follows: County road—the Pryor Mountain road beginning at the northwest edge of the CMA proceeding southward approximately .5 mile then eastward approximately two miles to the east edge of the CMA.

Other roads designated open that are not county roads are as follows: That part of the Depression Reservoir road that crosses public land in sections 29, 30, 31, and 32.

Vescovi

T. 8 N., R. 23 E.,
Sec 14 SENE
T. 7 N., R. 24 E.,
Sec 9 S2;
Sec 10 SE, E2;
Sec 15 ALL;
Sec 22 N2NW, SWNW, N2SW

All established roads are open.

Wolf Creek

T. 8 S., R. 22 E.,
Sec 7 S2SE;
Sec 8 S2SW;
Sec 15 S2SW;
Sec 17 ALL except NENE;
Sec 18 N2NE;
Sec 19 SE, SENE;
Sec 20 ALL;
Sec 21 ALL;
Sec 22 NW;
Sec 28 N2NW;
Sec 29 N2NE, N2NW, SWBW;
Sec 30 N2
T. 8S., R. 21 E.,
Sec 9 W2SE, S2NW;
Sec 10 All public lands except NWNE
Sec 12 SWNE;
Secs 14, 22, 24 and 26 ALL

Roads designated open are as follows: County roads—Wolf Creek road and Wolf Creek Spur road starting at the junction of Wolf Creek road (in Sec 18) proceeding eastward to the Bear Creek highway. There are no other open roads on public land during hunting season.

DATES: These designations will only be in effect during the hunting season as established by the Montana Department of Fish, Wildlife, and Parks. This designation will be in effect during the 2000 hunting season and will remain in effect until rescinded by the authorized officer.

FOR FURTHER INFORMATION CONTACT: Sandra S. Brooks, Billings Field Office, 5001 Southgate, Billings, Montana 59107–6800 or Montana Department of Fish, Wildlife, and Parks, 1125 Lake Elmo Road, Billings, Montana 59105.

Dated: August 22, 2000.

Sandra S. Brooks,

Field Manager.

[FR Doc. 00–21866 Filed 8–25–00; 8:45 am]

BILLING CODE 4310–84–P

DEPARTMENT OF THE INTERIOR

Bureau of Land Management

[WY–920–1430–EU; WYW 141063, WYW 142691]

Opening of National Forest System Land; Wyoming

AGENCY: Bureau of Land Management, Interior.

ACTION: Notice.

SUMMARY: This notice terminates the temporary segregative effect of National Forest System lands which were originally included in two applications for exchanges: one for 236.16 acres in the Thunder Basin National Grassland, Medicine Bow National Forest and the other for 210.00 acres in the Bighorn National Forest.

EFFECTIVE DATE: August 28, 2000.

FOR FURTHER INFORMATION CONTACT: Jimi Metzger, BLM Wyoming State Office, 5353 Yellowstone Rd., P.O. Box 1828, Cheyenne, Wyoming 82003, 307–775–6250.

SUPPLEMENTARY INFORMATION: Pursuant to the regulations contained in 43 CFR 2091.3–2(b), at 9 a.m. on August 28, 2000, the following described lands will be relieved of the temporary segregative effect of exchange applications WYW 141063 and WYW 142691, respectively:

Sixth Principal Meridian, Wyoming

T. 55 N., R. 69 W.,
Sec. 9, Lots 9–11, 14–16.

The area described contains 236.16 acres in Campbell County, Wyoming.

T. 50 N., R. 84 W.,
Sec. 23, SE¼SE¼SE¼;
Sec. 26, NE¼, NE¼NW¼.

The area described contains 210.00 acres in Johnson County, Wyoming.

At 9 a.m. on August 28, 2000, the lands shall be opened to such forms of disposition as may by law be made of National Forest System lands, including location and entry under the United States mining laws, subject to valid existing rights, the provisions of existing withdrawals, other segregations of record, and the requirements of applicable law. Appropriation of lands described in this order under the general mining laws prior to the date and time of restoration is unauthorized. Any such attempted appropriation, including attempted adverse possession under 30 U.S.C. 38 (1988) shall vest no rights against the United States. Acts required to establish a location and to initiate a right of possession are governed by State law where not in conflict with Federal law. The BLM will not intervene in disputes between rival locators over possessory rights since Congress has provided for such determination in local courts.

Dated: August 18, 2000.

Michael Madrid,

Chief, Mineral & Lands Authorization Group.

[FR Doc. 00–21868 Filed 8–25–00; 8:45 am]

BILLING CODE 4310–22–P

DEPARTMENT OF THE INTERIOR

Bureau of Land Management

[MT–924–1430–HN–003E; MTM 88487, MTM 88479, MTM 89430]

Notice of Intent To Amend the Powder River Resource Area, Judith-Valley-Phillips, and West HiLine Resource Management Plans; Chouteau, Blaine, Rosebud, and Valley Counties; MT

AGENCY: Bureau of Land Management, Interior.

ACTION: Notice.

SUMMARY: Notice is hereby given that the Bureau of Land Management (BLM) will amend the Judith-Valley-Phillips Resource Management Plan (RMP), the West HiLine RMP, and the Powder River Resource Area RMP with respect to management of public lands in Blaine, Chouteau, Rosebud, and Valley Counties. The BLM proposes to utilize 2,121.54 acres of Federal surface estate in the aforementioned counties, for which an RMP amendment is needed, to assist in the completion of Phase 4 of the Crow Boundary Settlement Act Land Exchange. These Federal lands will be exchanged for private land within the Crow Indian Reservation in Big Horn and Yellowstone Counties. The Federal land is legally described as follows:

	Acres
Blaine County	
T. 31 N., R. 25 E., PMM	
Sec. 21, lots 2 and 5;	73.21
Sec. 23, lot 4;	34.06
Sec. 26, lots 1 and 6;	8.19
Sec. 27, lot 1;	6.06
Sec. 28, lot 1.	13.44
Chouteau County	
T. 23 N., R. 15 E., PMM	
Sec. 24, NW¼ SW¼;	40.00
Sec. 25, NE¼NW¼.	40.00
Rosebud County	
T. 4 N., R. 43 E., PMM	
Sec. 22, All;	640.00
Sec. 26, N½N½;	160.00
Sec. 28, lots 3 and 4, E½SW¼, SE¼;	326.58
Sec. 32, SE¼NW¼;	40.00
Sec. 34, All.	640.00
Valley County	
T. 23 N., R. 34 E., PMM	
Sec. 14, E½NW¼.	80.00

Disposal of the Federal land described above was not analyzed in the aforementioned RMPs and their associated Environmental Impact Statements. Disposal of the Federal land requires that the specific tracts be identified in the land use plan with the criteria to be met for exchange and discussion of how the criteria have been satisfied. This will be part of the plan amendment and an Environmental Assessment will be prepared to analyze the effects of disposal.

DATES: Comments and recommendations on this Notice to Amend the Judith-Valley-Phillips RMP, the West HiLine RMP, and the Powder River Resource Area RMP should be received on or before September 25, 2000.

ADDRESSES: Comments should be sent to BLM Montana State Director, Attention: Russ Sorensen, P.O. Box 36800, Billings, Montana 59107–6800.

FOR FURTHER INFORMATION CONTACT: Russ Sorensen, Realty Specialist, 406–683–8036.

Dated: August 15, 2000.

Howard A. Lemm,

Acting Deputy State Director, Division of Resources.

[FR Doc. 00–21830 Filed 8–25–00; 8:45 am]

BILLING CODE 4310–$$–P

DEPARTMENT OF THE INTERIOR

Bureau of Land Management

[MT–924–1430–ET; SDM 80731]

Cancellation of Proposed Withdrawal; SD

AGENCY: Bureau of Land Management, Interior.

ACTION: Notice.

SUMMARY: The United States Department of Agriculture, Forest Service, has canceled its application to withdraw 2 acres of National Forest System land for protection of the Spokane Mine and millsite. The temporary segregative effect of the application expired March 5, 1994, and the land was opened to location and entry under the United States mining laws, subject to other segregations of record. The land has been and remains open to all other uses which may by law be made of National Forest System lands.

EFFECTIVE DATE: August 28, 2000.

FOR FURTHER INFORMATION CONTACT: Sandra Ward, Bureau of Land Management, Montana State Office, P.O. Box 36800, Billings, Montana 59107, 406–896–5052.

SUPPLEMENTARY INFORMATION: A Notice of Proposed Withdrawal was published in the **Federal Register** March 5, 1992 (57FR7936). This action will cancel the

proposed withdrawal. The land is described as follows:

Black Hills Meridian

Black Hills National Forest

(A 2-acre parcel within the following described land):
T. 2 S., R. 6 E.,
Sec. 26, S½N½SW¼SW¼SW¼ and N½S½SW¼SW¼SW¼.

The area described contains approximately 2 acres in Custer County.

The segregative effect associated with the application terminated March 5, 1994, in accordance with the notice published as FR Doc. 94–1512 in the **Federal Register** (59FR3558) dated January 24, 1994.

Dated: August 15, 2000.

Thomas P. Lonnie,

Deputy State Director, Division of Resources.

[FR Doc. 00–21831 Filed 8–25–00; 8:45 am]

BILLING CODE 4310–$$–P

DEPARTMENT OF THE INTERIOR

National Park Service

Lake McDonald/Park Headquarters Wastewater Treatment System Rehabilitation Final Environmental Impact Statement, Glacier National Park, MT

AGENCY: National Park Service, Department of the Interior.

ACTION: Availability of the Lake McDonald/Park Headquarters Wastewater Treatment System Rehabilitation Final Environmental Impact Statement.

SUMMARY: Pursuant to section 102 (2) C. of the National Environmental Policy Act of 1969, the National Park Service announces the availability of a final Environmental Impact Statement on the Lake McDonald/Park Headquarters Wastewater Treatment System Rehabilitation for Glacier National Park, Montana.

DATES: The Draft EIS was on public review from January 31, 2000 through March 31, 2000. Responses to public comment are addressed in the Final EIS. A 30-day no-action period will follow the Environmental Protection Agency's Notice of Availability of the Final EIS.

ADDRESSES: Copies of the Final EIS are available from the Superintendent, Glacier National Park, PO Box 128, West Glacier, Montana 59936. It is also available on the Internet at www.nps.gov/glac. Public reading copies of the Final EIS will be available for review at the following locations:

Office of the Superintendent, Glacier National Park, West Glacier, MT 59936, Telephone: (406) 888–7901

Glacier National Park, Hudson Bay District Office, St. Mary, MT 59417

Planning and Environmental Quality, Intermountain Support Office—Denver, National Park Service, P.O. Box 25287, Denver, CO 80225–0287, Telephone: (303) 969–2851 or (303) 969–2377

Office of Public Affairs, National Park Service, Department of Interior, 18th and C Streets NW, Washington D.C. 20240, Telephone: (202) 208–6843.

SUPPLEMENTARY INFORMATION: The Final EIS analyzes five alternatives to address the rehabilitation of the wastewater treatment system that currently serves the west side of Glacier National Park. The service area for the existing wastewater treatment plant includes park headquarters and residences, campgrounds, Lake McDonald Lodge, and concession businesses and employee housing. The existing wastewater treatment plant is no longer meeting its original treatment objective or operating at design capacity. The preferred alternative (alternative 3) is to construct an advanced wastewater treatment plant with an exfiltration gallery land discharge site. This alternative would provide the greatest level of treatment and the highest water quality of the alternatives considered. Minimal new site disturbance would be necessary to implement the preferred alternative. Based on public concerns, the discharge method for the treated effluent was selected that best protected the environment. Alternative 1A includes construction of an additional storage lagoon and anew spray field to discharge treated effluent. This would require clearing 6.5 hectares of undisturbed land and the existing spray field, located in the floodplain, would continue to be used. Alternative 1B includes construction of two new storage lagoons and an additional aerated lagoon (3.6 hectares). The existing spray field would continue to be used. Alternative 2 includes construction of an advanced wastewater treatment plant and a series of three rapid infiltration basins (3.6 hectares) to discharge treated effluent to the groundwater. The existing spray field would no longer be used. The No Action alternative (alternative 4) would continue operation of the existing wastewater treatment system and spray field. Occasional raw sewage spills are possible when storage capacity is exceeded and the spray field cannot be operated because of wet conditions.

The Final EIS in particular evaluates the environmental consequences of the preferred alternative and the other alternatives on wildlife, vegetation, threatened and endangered species, water quality and park and concession operations.

FOR FURTHER INFORMATION CONTACT: Contact Superintendent, Glacier National Park at the above address and telephone number.

Dated: August 15, 2000.

William Ladd,

Director, Intermountain Region, National Park Service.

[FR Doc. 00–21838 Filed 8–25–00; 8:45 am]

BILLING CODE 4310–70–P

DEPARTMENT OF THE INTERIOR

Bureau of Reclamation

Amendment to Contract No. I75r–3401A—Contra Costa Water District

AGENCY: Bureau of Reclamation, Interior.

ACTION: Notice.

SUMMARY: Notice is hereby given on the action to amend Contract No. I75r–3401A dated February 7, 2000, with Contra Costa Water District, Central Valley Project, California, to extend the time for renegotiation of the provisions of Article 12 entitled *Water Shortage and Apportionment* until after finalization of the CVP M&I Water Shortage Policy, but no later than February of 2002. Negotiations are scheduled to begin September 2000. This amendment will be negotiated pursuant to the Act of June 17, 1902 (32 Stat. 388), the Act of August 26, 1937 (50 Stat. 844) as amended, the Act of August 4, 1939 (53 Stat. 1187) as amended, the Act of October 12, 1982 (96 Stat. 1263) as amended, and the Central Valley Project Improvement Act, Title XXXIV, of Pub. L. 102–575.

FOR FURTHER INFORMATION CONTACT: Ms. Angela Slaughter, Repayment Specialist, Bureau of Reclamation, Mid-Pacific Region, 2800 Cottage Way, Sacramento, California 95825–1898; telephone 916–978–5252.

Dated: August 18, 2000.

Donna E. Tegelman,

Regional Resources Manager.

[FR Doc. 00–21840 Filed 8–25–00; 8:45 am]

BILLING CODE 4310–MN–P

DEPARTMENT OF LABOR

Mine Safety and Health Administration

Summary of Decisions Granting in Whole or in Part Petitions for Modification

AGENCY: Mine Safety and Health Administration (MSHA), Labor.

ACTION: Notice of affirmative decisions issued by the Administrators for Coal Mine Safety and Health and Metal and Nonmetal Mine Safety and Health on petitions for modification of the application of mandatory safety standards.

SUMMARY: Under section 101 of the Federal Mine Safety and Health Act of 1977, the Secretary of Labor (Secretary) may allow the modification of the application of a mandatory safety standard to a mine if the Secretary determines either that an alternate method exists at a specific mine that will guarantee no less protection for the miners affected than that provided by the standard, or that the application of the standard at a specific mine will result in a diminution of safety to the affected miners.

Final decisions on these petitions are based upon the petitioner's statements, comments and information submitted by interested persons, and a field investigation of the conditions at the mine. MSHA, as designee of the Secretary, has granted or partially granted the requests for modification listed below. In some instances, the decisions are conditioned upon compliance with stipulations stated in the decision. The term ''FR Notice'' appears in the list of affirmative decisions below. The term refers to the **Federal Register** volume and page where MSHA published a notice of the filing of the petition for modification.

FOR FURTHER INFORMATION CONTACT: Petitions and copies of the final decisions are available for examination by the public in the Office of Standards, Regulations, and Variances, MSHA, Room 627, 4015 Wilson Boulevard, Arlington, Virginia 22203. Contact Barbara Barron at 703–235–1910.

Dated: August 18, 2000.

Carol J. Jones,

Director, Office of Standards, Regulations and Variances.

Affirmative Decisions on Petitions for Modification

Docket No.: M–2000–005–C
FR Notice: 65 FR 10563
Petitioner: Independence Coal Company, Inc.
Regulation Affected: 30 CFR 75.350
Summary of Findings: Petitioner's proposal is to use air coursed through the conveyor belt entry to ventilate active working places by installing a low-level carbon monoxide monitoring system as an early warning fire detection system in all belt entries used to course intake air to a working place. This is considered an acceptable alternative method for the Cedar Grove Mine No. 1. MSHA grants the petition for modification for the Cedar Grove Mine No. 1 with conditions.

Docket No.: M–2000–009–C
FR Notice: 65 FR 10564
Petitioner: Performance Coal Company
Regulation Affected: 30 CFR 75.350
Summary of Findings: Petitioner's proposal is to use air coursed through the conveyor belt entry to ventilate active working places by installing a low-level carbon monoxide monitoring system as an early warning fire detection system in all belt entries used to course intake air to a working place. This is considered an acceptable alternative method for the Upper Big Branch Mine-South. MSHA grants the petition for modification for the Upper Big Branch Mine-South with conditions.

Docket No.: M–2000–010–C
FR Notice: 65 FR 10564
Petitioner: Aracoma Coal Company
Regulation Affected: 30 CFR 75.350
Summary of Findings: Petitioner's proposal is to use air coursed through the conveyor belt entry to ventilate active working places by installing a low-level carbon monoxide monitoring system as an early warning fire detection system in all belt entries used to course intake air to a working place. This is considered an acceptable alternative method for the Aracoma Alma Mine No. 1. MSHA grants the petition for modification for the Aracoma Alma Mine No. 1 with conditions.

Docket No.: M–2000–022–C
FR Notice: 65 FR 19928
Petitioner: Black Beauty Coal Company
Regulation Affected: 30 CFR 1909(b)(6)
Summary of Findings: Petitioner's proposal is to in lieu of front wheel brakes on the Getman Roadbuilder six-wheeled diesel grader, limit the minimum speed of the grader to less than 10 mph, provide training for the grader operators on lowering the moldboard for additional stopping capability in emergency situations, and on recognizing the appropriate speeds to use on different roadway conditions and slopes. This is considered an acceptable alternative method for the Air Quality Mine. MSHA grants the petition for modification for the Air Quality Mine with conditions.

Docket No.: M–1999–001–C
FR Notice: 64 FR 12183
Petitioner: Mountain Coal Company
Regulation Affected: 30 CFR 75.701
Summary of Findings: Petitioner's proposal is to use portable diesel generators to move and operate electric powered mobile equipment and pumps throughout the mine. This is considered an acceptable alternative method for the West Elk Mine. MSHA grants the petition for modification for the 480-volt, three-phase, 460 KW diesel powered generator (DPG) sets supplying power to a 400 KVA three-phase transformer and three-phase 480-, 575-, and 995-Volt power circuits for the West Elk Mine with conditions.

Docket No.: M–1999–002–C
FR Notice: 64 FR 12183
Petitioner: Mountain Coal Company
Regulation Affected: 30 CFR 75.901.
Summary of Findings: Petitioner's proposal is to use portable diesel generators to move and operate electric powered mobile equipment and pumps throughout the mine. This is considered an acceptable alternative method for the West Elk Mine. MSHA grants the petition for modification for the 480-volt, three-phase, 460 KW diesel powered generator (DPG) sets supplying power to a 400 KVA three-phase transformer and three-phase 480-, 575-, and 995-Volt power circuits for the West Elk Mine with conditions.

Docket No.: M–1999–003–C.
Petitioner: Peabody Coal Company.
Regulation Affected: 30 CFR 75.364(b)(4).
Summary of Findings: Petitioner's proposal is to establish evaluation points to monitor the return air course inby and outby the seals by establishing evaluation points to monitor the affected area, have a certified person monitor the evaluation points on a weekly basis to determine the volume of air and the methane and oxygen concentrations, and record all examination results in a book maintained on the surface of the mine. This is considered an acceptable alternative method for the Camp No. 1 Mine. MSHA grants the petition for modification for the continuous monitoring using intrinsically safe sensors installed as part of the mine's Atmospheric Monitoring System (AMS) and weekly evaluation of air entering and leaving approximately 900 feet of return air course which ventilates the inaccessible 4th Panel West Mine seals and an inaccessible portion of the North Main return air course for the Camp No. 1 Mine with conditions.

Docket No.: M–1999–004–C.
FR Notice: 64 FR 12183.
Petitioner: Peabody Coal Company.
Regulation Affected: 30 CFR 75.364(b)(2).
Summary of Findings: Petitioner's proposal is to establish evaluation points to monitor the return air course inby and outby the seals by establishing evaluation points to monitor the affected area, have a certified person monitor the evaluation points on a weekly basis to determine the volume of air and the methane and oxygen concentrations, and record all examination results in a book maintained on the surface of the mine. This is considered an acceptable alternative method for the Camp No. 1 Mine. MSHA grants the petition for modification for the evaluation of airflow through an approximately 1,450-foot-long, unsafe-to-travel segment of common return air course entries in Main North for the Camp No. 1 Mine with conditions.

Docket No.: M–1999–010–C.
FR Notice: 64 FR 16760.
Petitioner: D & D Coal Company
Regulation Affected: 30 CFR 75.1200(d)
Summary of Findings: Petitioner's proposal is to use cross-sections instead of contour lines through the intake slope, at locations of rock tunnel connections between veins, and at 1,000 foot intervals of advance from the intake slope, and to limit the required mapping of the mine workings above and below to those present within 1000 feet of the veins being mined except when veins are interconnected to other veins beyond the 100-foot limit through rock tunnels. This is considered an acceptable alternative method for the 7 Ft. Drift Mine. MSHA grants the petition for modification for the 7 Ft. Drift Mine with conditions.

Docket No.: M–1999–030–C
FR Notice: 64 FR 32551
Petitioner: Snyder Coal Company
Regulation Affected: 30 CFR 75.360
Summary of Findings: Petitioner's proposal is to visually examine each seal for physical damage from the slope gunboat during the preshift examination after an air quantity reading is taken just inby the intake portal; air reading and gas test for methane, carbon dioxide, and oxygen deficiency taken at the intake air split locations just off the slope in the gangway portion of the working section; and have the examiner reading the air and gas test record the date, time, his/her initials, and results of the readings at a sufficient location on the surface and correct all hazards prior to transporting personnel into the slope. This is considered an acceptable alternative method for the Rattling Run Slope Mine. MSHA grants the petition for modification for the Rattling Run Slope Mine with conditions.

Docket No.: M–1999–031–C
FR Notice: 64 FR 32551
Petitioner: Snyder Coal Company
Regulation Affected: 30 CFR 75.364(b)(1), (4) and (5)
Summary of Findings: Petitioner's proposal is to preshift examine the intake haulage slope and primary escapeway areas from the gunboat/slope car with an alternative air quality evaluation at the section's intake gangway level, and travel and thoroughly examine these areas for hazardous conditions once a month and record the date, time, and his/her initials at an appropriate location on the surface due to significant fall hazards. This is considered an acceptable alternative method in part, for the Rattling Run Slope Mine. MSHA grants the petition for modification for 30 CFR 75.364(b)(4), to conduct examinations of the seals located along the return and bleeder air courses from the ladder on a weekly basis, not on a monthly basis for the Rattling Run Slope Mine with conditions.

Docket No.: M–1999–034–C
FR Notice: 64 FR 32552
Petitioner: Snyder Coal Company
Regulation Affected: 30 CFR 75.1400(c)
Summary of Findings: Petitioner's proposal is to use a slope conveyance gunboat in transporting persons without installing safety catches or other no less effective devices, but instead use an increased rope strength/safety factor and secondary safety rope connection. This is considered an acceptable alternative method for the Rattling Run Slope Mine. MSHA grants the petition for modification for the Rattling Run Slope Mine with conditions.

Docket No.: M–1999–037–C
FR Notice: 64 FR 32552
Petitioner: Mingo Logan Coal Company
Regulation Affected: 30 CFR 75.350
Summary of Findings: Petitioner's proposal is to install a low-level carbon monoxide monitoring as an automatic fire detection as an early warning system in all conveyor belt entries to be used to ventilate working places. This is considered an acceptable alternative method for the Mountaineer Alma A Mine. MSHA grants the petition for modification for the Mountaineer Alma A Mine with conditions.

Docket No.: M–1999–052–C
FR Notice: 64 FR 41139
Petitioner: West Ridge Resources, Inc.
Regulation Affected: 30 CFR 75.1101–8
Summary of Findings: Petitioner's proposal to use a single overhead pipe system with ½-inch orifice automatic sprinklers located on 10-foot centers rather than every 8 feet to cover 50 feet of fire-resistant belt or 150 feet of non-fire resistant belt with actuation temperatures between 200 and 230 degrees Fahrenheit, have the automatic sprinklers located not more than 10 feet apart so that the discharge of water will extend over the belt drive, belt take-up, electrical control and gear reducing unit. This is an acceptable alternative method for the West Ridge Mine. MSHA grants the petition for modification for the water sprinkler system arrangement installed for fire protection on belt conveyors for the West Ridge Mine with conditions.

Docket No.: M–1999–058–C
FR Notice: 64 FR 41140
Petitioner: Knott County Mining Company
Regulation Affected: 30 CFR 75.900
Summary of Findings: Petitioner's proposal to use contactors for undervoltage protection as an alternative to using circuit breakers. This is considered an acceptable alternative method for the Panther Lick Mine. MSHA grants the petition for modification to allow the use of vacuum contactors to provide undervoltage and overload protection and monitor the grounding conductors for 480-volt belt conveyor drive motors and water pump motors greater than 5 horsepower located in the panther Lick Mine with conditions.

Docket No.: M–1999–064–C
FR Notice: 64 FR 49246
Petitioner: Bowie Resources, Ltd.
Regulation Affected: 30 CFR 75.804(a)
Summary of Findings: Petitioner's proposal is to use high-voltage cables that comply with the existing standard or CABLEC/BICC Anaconda brand KV,3C type SHD+GC or similar 5,000 volt cable with a center ground check conductor, but otherwise manufactured to the ICEA Standard S–75–381 for type SHD, three-conductor cables. This is considered an acceptable alternative method for the Bowie Mine No. 2. MSHA grants the petition for modification for the Bowie Mine No. 2 with conditions.

Docket No.: M–1999–074–C
FR Notice: 64 FR 55492
Petitioner: Consol of Kentucky, Inc.
Regulation Affected: 30 CFR 75.1101–8
Summary of Findings: Petitioner's proposal to use a single overhead pipe system with ½-inch orifice automatic

sprinklers located on 10-foot centers rather than every 8 feet to cover 50 feet of fire-resistant belt or 150 feet of non-fire resistant belt with actuation temperatures between 200 and 230 degrees Fahrenheit, have the automatic sprinklers located not more than 10 feet apart so that the discharge of water will extend over the belt drive, belt take-up, electrical control and gear reducing unit. This is an acceptable alternative method for the Mousie H4 Mine. MSHA grants the petition for modification for the water sprinkler system arrangement installed for fire protection on belt conveyors for the Mousie H4 Mine with conditions.

Docket No.: M–1999–077–C
FR Notice: 64 FR 55493
Petitioner: Consol of Kentucky, Inc.
Regulation Affected: 30 CFR 75.701
Summary of Findings: Petitioner's proposal is to obtain a low- and medium-voltage, three-phase, alternating current for use underground from a portable diesel-driven generator and to connect the neutral of the generator's transformer secondary through a suitable resistor to the frame of the diesel generator. This is considered an acceptable alternative method for the Mousie H4 Mine. MSHA grants the petition for modification for the 480-volt, three-phase, 188W diesel powered generator (DPG) set supplying power to a 20 KVA three-phase transformer and three-phase 600-volt and 995-volt power circuits at the Mousie H4 Mine with conditions.

Docket No.: M–1999–080–C
FR Notice: 64 FR 55493
Petitioner: Wayne Processing, Inc.
Regulation Affected: 30 CFR 75.503
Summary of Findings: Petitioner's proposal is to use a spring-loaded locking device to secure battery plugs to machine mounted receptacles instead of using padlocks. This is considered an acceptable alternative method for the No. 1 Mine. MSHA grants the petition for modification for the use of permanently installed spring-loaded locking devices in lieu of padlocks on battery plugs at the No. 1 Mine with conditions.

Docket No.: M–1999–081–C
FR Notice: 64 FR 55493
Petitioner: Sheep Fork Energy, Inc.
Regulation Affected: 30 CFR 75.503
Summary of Findings: Petitioner's proposal is to use a spring-loaded locking device to secure battery plugs to machine mounted receptacles instead of using padlocks. This is considered an acceptable alternative method for the No. 6 Mine. MSHA grants the petition for modification for the use of permanently installed spring-loaded locking devices in lieu of padlocks on battery plugs at the No. 6 Mine with conditions.

Docket No.: M–1999–083–C
FR Notice: 64 FR 55493
Petitioner: Garrett Mining, Inc.
Regulation Affected: 30 CFR 75.503
Summary of Findings: Petitioner's proposal is to use a spring-loaded locking device to secure battery plugs to machine mounted receptacles instead of using padlocks. This is considered an acceptable alternative method for the No. 2 Mine. MSHA grants the petition for modification for the use of permanently installed spring-loaded locking devices in lieu of padlocks on battery plugs at the No. 2 Mine with conditions.

Docket No.: M–1999–084–C
FR Notice: 64 FR 57661
Petitioner: Clark Elkhorn Coal Company
Regulation Affected: 30 CFR 75.503
Summary of Findings: Petitioner's proposal is to use a spring-loaded locking device to secure battery plugs to machine mounted receptacles instead of using padlocks. This is considered an acceptable alternative method for the Ratliff Mine. MSHA grants the petition for modification for the use of permanently installed spring-loaded locking devices in lieu of padlocks on battery plugs at the Ratliff Mine with conditions.

Docket No.: M–1999–085–C
FR Notice: 64 FR 57661
Petitioner: Matrix Coal Company
Regulation Affected: 30 CFR 75.503
Summary of Findings: Petitioner's proposal is to use a spring-loaded locking device to secure battery plugs to machine mounted receptacles instead of using padlocks. This is considered an acceptable alternative method for the Mohawk Mine. MSHA grants the petition for modification for the use of permanently installed spring-loaded locking devices in lieu of padlocks on battery plugs at the Mohawk Mine with conditions.

Docket No.: M–1999–086–C
FR Notice: 64 FR 57661
Petitioner: Remington Coal Company, Inc.
Regulation Affected: 30 CFR 75.503
Summary of Findings: Petitioner's proposal is to use a spring-loaded locking device to secure battery plugs to machine mounted receptacles instead of using padlocks. This is considered an acceptable alternative method for the Stockburg Mine. MSHA grants the petition for modification for the use of permanently installed spring-loaded locking devices in lieu of padlocks on battery plugs at the Stockburg No. 1 Mine with conditions.

Docket No.: M–1999–087–C
FR Notice: 64 FR 57661
Petitioner: Goodin Creek Contracting, Inc.
Regulation Affected: 30 CFR 75.380(f)(4)
Summary of Findings: Petitioner's proposal is to install two ten pound portable chemical fire extinguishers in the operators' deck of each Mescher three wheel tractor readily accessible to the operator, have the operator inspect each fire extinguisher daily prior to entering the escapeway, maintain records of inspections, and maintain a sufficient number of spare fire extinguishers at the mine in case the fire extinguisher becomes defective. This is considered an acceptable alternative method for the Goodin Creek Mine. MSHA grants the petition for modification for the Mescher three wheel tractors to be operated in the primary escapeway at the Goodin Creek Mine with conditions.

Docket No.: M–1999–088–C
FR Notice: 64 FR 57662
Petitioner: Canfield Energy, Inc.
Regulation Affected: 30 CFR 75.380(f)(4)(i)
Summary of Findings: Petitioner's proposal is to install two ten pound portable chemical fire extinguishers in the operators' deck of each Mescher three wheel tractor readily accessible to the operator, have the operator inspect each fire extinguisher daily prior to entering the escapeway, maintain record of inspections, and maintain a sufficient number of spare fire extinguishers at the mine in case the fire extinguisher becomes defective. This is considered an acceptable alternative method for the Canfield #5 Mine. MSHA grants the petition for modification for the Mescher three wheel tractors to be operated in the primary escapeway at the Canfield #5 Mine with conditions.

Docket No.: M–1999–089–C
FR Notice: 64 FR 57662
Petitioner: Canfield Energy, Inc.
Regulation Affected: 30 CFR 75.342
Summary of Findings: Petitioner's proposal is to use a hand-held continuous duty methane, oxygen, and carbon monoxide detector instead of machine-mounted methane monitors on three-wheel tractors used to load and haul coal from the mine faces. This is considered an acceptable alternative method for the Canfield #5 Mine. MSHA grants the petition for modification for the Mescher permissible three-wheel battery-powered tractors used to load coal at the Canfield #5 Mine with conditions.

Docket No.: M–1999–091–C
FR Notice: 64 FR 57662

Petitioner: Mallie Coal Company, Inc.
Regulation Affected: 30 CFR 75.342
Summary of Findings: Petitioner's proposal is to use a hand-held continuous duty methane, oxygen, and carbon monoxide detector instead of machine-mounted methane monitors on three-wheel tractors used to load and haul coal from the mine faces. This is considered an acceptable alternative method for the Mine No. 4. MSHA grants the petition for modification for the Mescher permissible three-wheel battery-powered tractors used to load coal at the Mine No. 4 with conditions.

Docket No.: M–1999–093–C
FR Notice: 64 FR 57662
Petitioner: RAG Empire Corporation
Regulation Affected: 30 CFR 75.507
Summary of Findings: Petitioner's proposal is to use a 480-volt non-permissible pump in boreholes in sealed areas of the mine. This is considered an acceptable alternative method for the Eagle No. 5 Mine. MSHA grants the petition for modification for the Eagle No. 5 Mine with conditions.

Docket No.: M–1999–094–C
FR Notice: 64 FR 57662
Petitioner: RAG Empire Corporation
Regulation Affected: 30 CFR 75.902
Summary of Findings: Petitioner's proposal is to use a 480-volt non-permissible pump in boreholes in sealed areas at 1 North areas of the mine. This is considered an acceptable alternative method for the Eagle No. 5 Mine. MSHA grants the petition for modification for the North Angle Pump at the Eagle No. 5 Mine with conditions.

Docket No.: M–1999–097–C
FR Notice: 64 FR 57663
Petitioner: Drummond Company, Inc.
Regulation Affected: 30 CFR 75.1909(b)(6)
Summary of Findings: Petitioner's proposal is to use its Getman diesel grader without individual service brakes on all grader wheels; equip the grader with services brakes on each drive wheel and stationary emergency brakes; to limit the tramming speed of the grader to 10 miles per hour; and train grader operators to check the function of the brakes during pre-operational checks and if required, train the operators to lower the grader blade to the ground as an additional braking mechanism and while the grader is parked. This is considered an acceptable alternative method for the Shoal Creek Mine. MSHA grants the petition for modification limited in application to the Getman/Model RDG–1504 (Serial No. 6297) at the Shoal Creek Mine with conditions.

Docket No.: M–1999–099–C
FR Notice: 64 FR 57663
Petitioner: J & A Coal Corporation
Regulation Affected: 30 CFR 75.503
Summary of Findings: Petitioner's proposal is to a spring loaded locking device to secure battery plugs into machine mounted receptacle on mobile battery powered equipment instead of using padlocks. This is considered an acceptable alternative method for the No. 1 Mine. MSHA grants the petition for modification the use of permanently installed spring-loaded locking devices in lieu of padlocks on battery plugs at the No. 1 Mine with conditions.

Docket No.: M–1999–103–C
FR Notice: 64 FR 57663
Petitioner: Consol of Kentucky, Inc.
Regulation Affected: 30 CFR 75.901(a)
Summary of Findings: Petitioner's proposal is to use low- and medium-voltage, three-phase, alternating current for use underground from a portable diesel-driven generator and to connect the neutral of the generator's transformer secondary through a suitable resistor to the frame of the diesel generator. This is considered an acceptable alternative method for the Mousie H4 Mine. MSHA grants the petition for modification for use of the 480-volt, three-phase, 188KW diesel powered generator (DPG) set supplying power to a 200 KVA three-phase transformer and three-phase 600-volt and 995-volt power circuits at the Mousie H4 Mine with conditions.

Docket No.: M–1999–105–C
FR Notice: 64 FR 57664
Petitioner: Alex Energy, Inc.
Regulation Affected: 30 CFR 75.1700
Summary of Findings: Petitioner's proposal is to plug and mine through oil and gas wells and to notify the District Manager or designee prior to mining within 300 feet of the well. This is considered an acceptable alternative method for the Jerry Fork Eagle Mine. MSHA grants the petition for modification for mining through or near (whenever the safety barrier diameter is reduced to a distance less than the District Manager would approve pursuant to Section 75.1700) plugged oil or gas wells penetrating the Eagle Coal Seam and other mineable coal seams at the Jerry Fork Eagle Mine with conditions.

Docket No.: M–1999–106–C
FR Notice: 64 FR 70054
Petitioner: Energy Fuels Coal, Inc.
Regulation Affected: 30 CFR 75.901
Summary of Findings: Petitioner's proposal is to use a diesel generator to move equipment from section to section, and use a roof bolter to rehabilitate remote areas of the mine with a genset 480 vac three-phase, mounted and grounded to a metal sled with an area of 60 square feet that is in contact with damp mine floor at all times. This is considered an acceptable alternative method for the South Field Mine. MSHA grants the petition for modification for 480-volt, three-phase, 135KW diesel powered generator (DPG set supplying power to a 169 KVA three-phase transformer and three-phase 480-volt and 995-volt power circuits at the South Field Mine with conditions.

Docket No.: M–1999–111–C
FR Notice: 64 FR 70054
Petitioner: Ohio County Coal Company
Regulation Affected: 30 CFR 75.1103–4(a)
Summary of Findings: Petitioner's proposal is to install a low-level carbon monoxide system as an early warning fire detection system in all belt entries where a monitoring system identifies a sensor location instead of identifying each belt flight. This is an acceptable alternative method for the Freedom Mine. MSHA grants the petition for modification for the Freedom Mine with conditions.

Docket No.: M–1999–112–C
FR Notice: 64 FR 70054
Petitioner: Bledsoe Coal Corporation
Regulation Affected: 30 CFR 75.900
Summary of Findings: Petitioner's proposal is to use contactors for protection on circuit breakers instead of using under-voltage protection and continue using short circuit breakers for interrupting retrips. This is considered an acceptable alternative method for the Mine No. 4, and Mine No. 60. MSHA grants the petition for modification for the Mine No. 4, and Mine No. 60 with conditions.

Docket No.: M–1999–113–C
FR Notice: 64 FR 70054
Petitioner: Mountain Coal Company
Regulation Affected: 30 CFR 75.1909(b)(6)
Summary of Findings: Petitioner's proposal is to equip its road graders with service brakes on the rear wheels and limit the speed to a maximum of 15 miles per hour, train all personnel who operate the graders on proper techniques for lowering the blade additional slowing or stopping capability is needed. This is considered an acceptable alternative method for the West Elk Mine. MSHA grants the petition for modification for use of the Getman, Serial No. 6275, and Arnold, Serial No. 7773695, diesel graders with the speed of the grader limited to 10 miles per hour at the West Elk Mine with conditions.

Docket No.: M–1999–114–C
FR Notice: 64 FR 70055
Petitioner: Snyder Coal Company

Regulation Affected: 30 CFR 75.1200(d) & (i)

Summary of Findings: Petitioner's proposal is to use cross-sections instead of contour lines through the intake slope, at locations of rock tunnel connections between veins, and at 1,000-foot intervals of advance from the intake slope and limit the required mapping of the mine workings above and below to those present within 100 feet of the veins being mined except when veins are interconnected to other veins beyond the 100-foot limit through rock tunnels. This is considered an acceptable alternative method for the Rattling Run Mine. MSHA grants the petition for modification for the use of cross-sections, in lieu of contour lines, limiting the mapping of mines above or below this mine to those within 100 feet of the vein being mined at the Rattling Run Slope Mine with conditions.

Docket No.: M–1999–115–C
FR Notice: 64 FR 70055
Petitioner: Wabash Mine Holding Company
Regulation Affected: 30 CFR 75.364(b)(2) and (b)(4)

Summary of Findings: Petitioner's proposal is to establish a permanent monitoring station to monitor the air for oxygen and methane after it passes the seals and links the monitoring station to the mine-wide monitoring (DAN) system and evaluate the air that passes through the seals on a weekly basis due to unsafe roof conditions. This is considered an acceptable alternative method for the Wabash Mine. MSHA grants the petition for modification for continuous monitoring using intrinsically safe sensors installed as part of the mine's Atmospheric Monitoring System (AMS) and preshift examination and evaluation of air entering and leaving approximately 900 feet of designated return air course that ventilates the seven inaccessible Main West Mine seals at the Wabash Mine with conditions.

Docket No.: M–1999–121–C
FR Notice: 64 FR 70732
Petitioner: Long Branch Energy
Regulation Affected: 30 CFR 75.503

Summary of Findings: Petitioner's proposal is to replace a padlock on battery plug connectors on mobile battery-powered machines with a threaded ring and a permanently installed spring-loaded device to prevent the plug connector from accidently disengaging while under load. This is considered an acceptable alternative method for the Long Branch Energy #18 Mine. MSHA grants the petition for modification for the Long Branch Energy #18 Mine with conditions.

Docket No.: M–1999–124–C
FR Notice: 64 FR 70732
Petitioner: Independence Coal Company, Inc.
Regulation Affected: 30 CFR 75.350

Summary of Findings: Petitioner's proposal is to use belt air to ventilate active working places by installing a low-level carbon monoxide detection system as an early warning fire detection system in all belt entries used as intake air courses. This is considered an acceptable alternative method for the Justice No. 1 Mine. MSHA grants the petition for modification for the Justice No. 1 Mine with conditions.

Docket No.: M–1999–147–C
FR Notice: 65 FR 5701
Petitioner: Old Ben Coal Company
Regulation Affected: 30 CFR 75.900

Summary of Findings: Petitioner's proposal is to amend Item #1 of its previously granted petition for modification, docket number M–96–147–C, to read as follows: ''The petition for modification shall apply only to the requirement for under-voltage and grounded phase protection for three-phase circuits supplying stationary belt drive installations presently in use or installed in the future.'' This is considered an acceptable alternative method for the Zeigler #11 Mine. MSHA grants the petition for modification for the Zeigler #11 Mine with conditions.

Docket No.: M–1999–149–C
FR Notice: 65 FR 5701
Petitioner: Fork Creek Mining Company
Regulation Affected: 30 CFR 75.350

Summary of Findings: Petitioner's proposal is to use air coursed through the belt haulage entry to ventilate active working places by installing a carbon monoxide monitoring system as an early warning fire detection system in all belt entries used to carry intake air to a working place. This is considered an acceptable alternative method for the Fork Creek No. 1 Mine. MSHA grants the petition for modification for the Fork Creek No. 1 Mine with conditions.

Docket No.: M–1998–109–C
FR Notice: 64 FR 2519
Petitioner: Meadow River Coal Company
Regulation Affected: 30 CFR 75.350

Summary of Findings: Petitioner's proposal is to use belt entry as an intake airway by installing a low-level carbon monoxide detection system in all belt entries used as intake air courses as an early warning fire detection system (carbon monoxide monitoring system). This is considered an acceptable alternative method for the Meadow River No. 1 Mine. MSHA grants the petition for modification to allow air coursed through conveyor belt entries to be used to ventilate working places at the Meadow River No. 1 Mine with conditions.

Docket No.: M–1999–002–M
FR Notice: 64 FR 23874
Petitioner: ASARCO, Inc.
Regulation Affected: 30 CFR 56.14100(a)

Summary of Findings: Petitioner's proposal is to have a single qualified employee conduct the required pre-shift inspections of the buses used to transport miners for the oncoming shift, rather than the individual bus drivers who operate the vehicles on the shift. This is considered an acceptable alternative method for the ASARCO Ray Complex Mine. MSHA grants the petition for modification for the ASARCO Ray Complex Mine with conditions.

[FR Doc. 00–21835 Filed 8–25–00; 8:45 am]
BILLING CODE 4510–43–P

NATIONAL CREDIT UNION ADMINISTRATION

Agency Information Collection Activities: Submission to OMB for Revision to a Currently Approved Information Collection; Comment Request

AGENCY: National Credit Union Administration (NCUA).

ACTION: Request for comment.

SUMMARY: The NCUA intends to submit the following information collection to the Office of Management and Budget (OMB) for review and clearance under the Paperwork Reduction Act of 1995 (Public Law 104–13, 44 U.S.C. Chapter 35). This information collection is published to obtain comments from the public.

DATES: Comments will be accepted until October 27, 2000.

ADDRESSES: Interested parties are invited to submit written comments to NCUA Clearance Officer or OMB Reviewer listed below:

Clearance Officer: Mr. James L. Baylen (703) 518–6411, National Credit Union Administration 1775 Duke Street, Alexandria, Virginia 22314–3428, Fax No. 703–518–6433, E-mail: jbaylen@ncua.gov

OMB Reviewer: Alexander T. Hunt (202) 395–7860, Office of Management and Budget, Room 10226, New Executive Office Building Washington, DC 20503

FOR FURTHER INFORMATION CONTACT: Copies of the information collection requests, with applicable supporting

documentation, may be obtained by calling the NCUA Clearance Officer, James L. Baylen, (703) 518–6411. It is also available on the following website: *www.NCUA.gov.*

SUPPLEMENTARY INFORMATION: Proposal for the following collection of information:

OMB Number: 3133–0004.

Form Number: NCUA 5300.

Type of Review: Revision to the currently approved collection.

Title: Semi-Annual and Quarterly Call Report.

Description: The financial and statistical information is essential to NCUA in carrying out its responsibility for the supervision of federally insured credit unions. The information also enables NCUA to monitor all federally insured credit unions whose share accounts are insured by the National Credit Union Share Insurance Fund (NCUSIF).

Respondents: All Credit Unions.

Estimated No. of Respondents/ Recordkeepers: 11,000.

Estimated Burden Hours Per Response: 9 hours.

Frequency of Response: Quarterly and Semi-Annually.

Estimated Total Annual Burden Hours: 225,000.

Estimated Total Annual Cost: N/A.

By the National Credit Union Administration Board on August 22, 2000.

Becky Baker,

Secretary of the Board.

[FR Doc. 00–21857 Filed 8–25–00; 8:45 am]

BILLING CODE 7535–01–P

NATIONAL FOUNDATION ON THE ARTS AND THE HUMANITIES

Meeting of The National Museum Services Board

Agency: Institute of Museum and Library Services.

Action: Notice of Meeting.

Summary: This notice sets forth the agenda of a forthcoming meeting of the National Museum Services Board. This notice also describes the function of the board. Notice of this meeting is required under the Government through the Federal Advisory Committee Act 5 U.S.C. App., and regulations of the Institute of Museum and Library Services, 45 CFR 1180.84.

Time/Date: 3:00 p.m.–5:30 p.m. on Thursday, September 14, 2000.

Status: Open.

Address: The Madison Hotel, 15th and M Streets, NW, Mt. Vernon Room—Salon C, Washington, DC 20005, (202) 862–1600.

FOR FURTHER INFORMATION CONTACT: Elizabeth Lyons, Special Assistant to the Director, Institute of Museum and Library Services, 1100 Pennsylvania Avenue, NW, Room 510, Washington, DC 20506, (202) 606–4649.

SUPPLEMENTARY INFORMATION: The National Museum Services Board is established pursuant to 20 U.S.C. section 9175. The Board has responsibility for the general policies with respect to the powers, duties, and authorities vested in the Institute under the Museum Services Act.

The meeting on Thursday, September 14, 2000 will be open to the public. If you need special accommodations due to a disability, please contact: Institute of Museum and Library Services, 1100 Pennsylvania Avenue, NW, Washington, DC 20506—(202) 606–8536—TDD (202) 606–8636 at least seven (7) days prior to the meeting date.

Agenda

79th Meeting of the National Museum Services Board; The Madison Hotel, 15th and M Streets, NW, Mt. Vernon Room—Salon C, Washington, DC 20005, (202) 862–1600 on Thursday, September 14, 2000.

3:00 p.m.–5:30 p.m.

I. Chairperson's Welcome and Minutes of the 78th NMSB Meeting—May 18, 2000

II. Director's Report

III. Departmental Reports:

Legislative/Public Affairs Report

Office of Research and Technology Report

Office of Museum Services Program Report

Office of Library Services Program Report

IV. Conservation Assessment Program: Evaluation and Discussion

Perspectives on Fundraising

Dated: August 15, 2000.

Linda Bell,

Director of Policy, Planning and Budget, National Foundation on the Arts and Humanities, Institute of Museum and Library Services.

[FR Doc. 00–21834 Filed 8–25–00; 8:45 am]

BILLING CODE 7036–01–M

NUCLEAR REGULATORY COMMISSION

[Docket No. 50–443]

In the Matter of Connecticut Light and Power Company, North Atlantic Energy Corporation, and North Atlantic Energy Service Corporation (Seabrook Station, Unit 1); Order Approving Application Regarding Corporate Merger of Consolidated Edison, Inc., and Northeast Utilities

I

The Connecticut Light and Power Company (CL&P) holds 4.05985-percent ownership interest in Seabrook Station, Unit 1, and North Atlantic Energy Corporation (NAEC) holds 35.98201-percent ownership interest in Seabrook Station, Unit 1. CL&P and NAEC are subsidiaries of Northeast Utilities (NU). Nine other investor-owned and municipal entities unaffiliated with NU are holders of the remaining ownership interests in Seabrook Station, Unit 1.

CL&P and NAEC with the other co-owners of Seabrook Station, Unit 1 are holders of Facility Operating License No. NPF–86 issued by the NRC pursuant to 10 CFR Part 50 on March 15, 1990 for Seabrook Station, Unit 1. Under this license, North Atlantic Energy Service Corporation (NAESC), also a subsidiary of NU, has the authority to operate Seabrook Station, Unit 1, and is co-holder of the license in this regard. Seabrook Station is located in Rockingham County, New Hampshire.

II

Pursuant to Section 184 of the Atomic Energy Act of 1954 (the Act), as amended, and 10 CFR 50.80, Northeast Nuclear Energy Company and NAESC, on behalf of the NU subsidiary licensees of the Seabrook unit, and Consolidated Edison Company of New York, Inc. (CEI of NY), a subsidiary of Consolidated Edison, Inc. (CEI), jointly filed an application dated January 13, 2000, as supplemented by letter dated May 2, 2000 (collectively herein referred to as the application), requesting the Commission's approval of the indirect transfer of the license for the Seabrook unit, to the extent held by CL&P, NAEC, and NAESC, in connection with proposed corporate mergers involving CEI and NU. The applicants informed the Commission that CEI and NU were in the process of implementing a corporate merger in which CEI and NU will be combined through two simultaneous mergers: the merger of CEI into New CEI, a Delaware corporation, and the merger of an indirect, wholly owned subsidiary of New CEI with NU.

New CEI would become the parent corporation to, and sole owner of, CEI of NY and NU. CL&P, NAEC, and NAESC will remain subsidiaries of NU. CL&P and NAEC would continue to hold their respective ownership interests in and possession-only license for Seabrook Station, Unit 1. The indirect CEI interest in Indian Point Units 1 and 2 and the indirect NU interest in Millstone Units 1, 2, and 3 will be the subject of separate orders. NAESC will remain the operator of Seabrook Station, Unit 1. The NU subsidiary owners would each remain an ''electric utility'' as defined in 10 CFR 50.2, engaged in the generation, transmission, and distribution of electric energy for wholesale and retail sale. No physical changes to the facility or operational changes are being proposed in the application. Notice of this request for approval was published in the **Federal Register** on April 7, 2000 (65 FR 18380). No hearing requests concerning Seabrook, Unit 1, were received.

Under 10 CFR 50.80, no license shall be transferred, directly or indirectly, through transfer of control of the license, unless the Commission gives its consent in writing. Upon review of the information submitted in the application and other information before the Commission, the NRC staff has determined that the corporate merger will not affect the qualifications of CL&P, NAEC, and NAESC as holders of the license referenced above, and that the indirect transfer of the license, to the extent effected by the merger, is otherwise consistent with applicable provisions of law, regulations, and orders issued by the Commission subject to the conditions set forth herein. These findings are supported by a Safety Evaluation dated August 22, 2000.

III

Accordingly, pursuant to Sections 161b, 161i, 161o, and 184 of the Atomic Energy Act of 1954, as amended, 42 USC 2201(b), 2201(i), 2201(o), and 2234; and 10 CFR 50.80, *It Is Hereby Ordered*, That the application regarding the indirect license transfer referenced above is approved subject to the following conditions: (1) CL&P and NAEC as applicable, shall provide the Director of the Office of Nuclear Reactor Regulation a copy of any application, at the time it is filed, to transfer (excluding grants of security interests or liens) from CL&P or NAEC respectively, to its proposed direct or indirect parent or to any other affiliated company, facilities for the production, transmission, or distribution of electric energy having a depreciated book value exceeding ten percent (10%) of the subject licensee's consolidated net utility plant, as recorded in the licensee's books of account and (2) should the corporate merger of CEI and NU not be completed by December 31, 2001, this Order shall become null and void, provided, however, on application and for good cause shown, such date may be extended.

For further details with respect to this action, see the initial application dated January 13, 2000, the supplemental letter dated May 2, 2000, and the Safety Evaluation dated August 22, 2000, which are available for public inspection at the Commission's Public Document Room, the Gelman Building, 2120 L Street, NW., Washington, DC, and accessible electronically through the ADAMS Public Electronic Reading Room link at the NRC Web site *(http://www.NRC.gov)*.

For the Nuclear Regulatory Commission.

Dated at Rockville, Maryland, this 22nd day of August 2000.

Samuel J. Collins,

Director, Office of Nuclear Reactor Regulation.

[FR Doc. 00–21881 Filed 8–25–00; 8:45 am]

BILLING CODE 7590–01–P

NUCLEAR REGULATORY COMMISSION

[Docket Nos. 50–245, 50–336, and 50–423]

In the Matter of The Connecticut Light and Power Company, Western Massachusetts Electric Company, Public Service Company of New Hampshire, and Northeast Nuclear Energy Company (Millstone Nuclear Power Station, Units 1, 2, and 3); Order Approving Application Regarding Corporate Merger of Consolidated Edison, Inc., and Northeast Utilities

I

The Connecticut Light and Power Company (CL&P) holds 81-percent ownership interest in Millstone Nuclear Power Station (Millstone) Units 1 and 2, and 52.9330-percent ownership interest in Millstone Unit 3; Western Massachusetts Electric Company (WMECO) holds 19-percent ownership in Millstone Units 1 and 2, and 12.2385-percent ownership in Millstone Unit 3; and Public Service Company of New Hampshire (PSNH) holds 2.8475-percent ownership in Millstone, Unit 3. CL&P, WMECO, and PSNH are subsidiaries of Northeast Utilities (NU). Ten other investor-owned and municipal entities unaffiliated with NU hold the remaining ownership interests in Millstone Unit 3.

CL&P and WMECO are holders of Facility Operating License No. DPR–21 issued by the Atomic Energy Commission pursuant to 10 CFR Part 50 on October 7, 1970, for Millstone Unit 1 and Facility Operating License No. DPR–65 issued by the Nuclear Regulatory Commission (NRC) pursuant to 10 CFR Part 50 on September 26, 1975, for Millstone Unit 2. CL&P, WMECO, and PSNH (with the other co-owners of Millstone Unit 3) are holders of Facility Operating License No. NPF–49 issued by the NRC pursuant to 10 CFR Part 50 on January 31, 1986, for Millstone Unit 3. Under these licenses, Northeast Nuclear Energy Company (NNEC), an affiliate of NU, has the authority to operate Millstone Units 1, 2, and 3, and is a co-holder of the respective licenses in this regard. Millstone is located in New London County, Connecticut.

II

Pursuant to Section 184 of the Atomic Energy Act of 1954 (the Act), as amended, and 10 CFR 50.80, NNEC and North Atlantic Energy Service Corporation, on behalf of the NU subsidiary licensees of the Millstone units, and Consolidated Edison Company of New York, Inc. (CEI of NY), a subsidiary of Consolidated Edison, Inc. (CEI), jointly filed an application dated January 13, 2000, as supplemented by letter dated May 2, 2000 (collectively herein referred to as the application), requesting the Commission's approval of the indirect transfer of the licenses for the Millstone units to the extent held by CL&P, PSNH, WMECO, and NNEC in connection with the proposed corporate mergers involving CEI and NU. The applicants informed the Commission that CEI and NU were in the process of implementing a corporate merger in which CEI and NU will be combined through two simultaneous mergers: the merger of CEI into New CEI, a Delaware corporation, and the merger of an indirect, wholly owned subsidiary of New CEI with NU. New CEI would become the parent corporation to, and sole owner of, CEI of NY and NU. CL&P, WMECO, PSNH, and NNEC, will remain subsidiaries of NU. CL&P, WMECO, and PSNH would continue to hold their respective ownership interests in and possession-only licenses for Millstone Units 1, 2, and 3. The indirect CEI interest in Indian Point Units 1 and 2 and the indirect NU interest in Seabrook Station Unit 1, will be the subject of separate orders. NNEC will remain the operator of Millstone Units 1, 2, and 3. The NU

subsidiary owners would each remain an ''electric utility'' as defined in 10 CFR 50.2, engaged in the generation, transmission, and distribution of electric energy for wholesale and retail sale. No physical changes to the facilities or operational changes are being proposed in the application. Notice of this request for approval was published in the **Federal Register** on April 7, 2000 (65 FR 18381). Pursuant to the notice, a petition for leave to intervene and request for hearing regarding the proposed indirect transfer of the licenses for the Millstone units has been received from the Connecticut Coalition Against Millstone and the Long Island Coalition Against Millstone and the matter is currently pending before the Commission.

Under 10 CFR 50.80, no license shall be transferred, directly or indirectly, through transfer of control of the license, unless the Commission gives its consent in writing. Upon review of the information submitted in the application and other information before the Commission, the NRC staff has determined that the corporate merger will not affect the qualifications of WMECO, CL&P, PSNH, and NNEC as holders of the licenses referenced above, and that the indirect transfer of the licenses, to the extent effected by the merger, is otherwise consistent with applicable provisions of law, regulations, and orders issued by the Commission subject to the conditions set forth herein. These findings are supported by a Safety Evaluation dated August 22, 2000.

III

Accordingly, pursuant to Sections 161b, 161i, 161o, and 184 of the Atomic Energy Act of 1954, as amended, 42 USC 2201(b), 2201(i), 2201(o), and 2234; and 10 CFR 50.80, *It Is Hereby Ordered*, That the application regarding the indirect license transfers referenced above is approved subject to the following conditions: (1) CL&P, WMECO, and PSNH, as applicable, shall provide the Director of the Office of Nuclear Reactor Regulation a copy of any application, at the time it is filed, to transfer (excluding grants of security interests or liens) from CL&P, WMECO, or PSNH, respectively, to its proposed direct or indirect parent or to any other affiliated company, facilities for the production, transmission, or distribution of electric energy having a depreciated book value exceeding ten percent (10%) of the subject licensee's consolidated net utility plant, as recorded in the licensee's books of account, and (2) should the corporate merger of CEI and NU not be completed by December 31, 2001, this Order shall become null and void, provided, however, on application and for good cause shown, such date may be extended.

For further details with respect to this action, see the initial application dated January 13, 2000, the supplemental letter dated May 2, 2000, and the Safety Evaluation dated August 22, 2000, which are available for public inspection at the Commission's Public Document Room, the Gelman Building, 2120 L Street, NW., Washington, DC, and accessible electronically through the ADAMS Public Electronic Reading Room link at the NRC Web site *(http://www.NRC.gov)*.

Dated at Rockville, Maryland, this 22nd day of August 2000.

For the Nuclear Regulatory Commission.

Samuel J. Collins,

Director, Office of Nuclear Reactor Regulation.

[FR Doc. 00–21883 Filed 8–25–00; 8:45 am]

BILLING CODE 7590–01–P

NUCLEAR REGULATORY COMMISSION

[Docket Nos. 50–003 and 50–247]

In the Matter of Consolidated Edison Company of New York, Inc. (Indian Point Nuclear Generating Units 1 and 2); Order Approving Application Regarding Corporate Merger of Consolidated Edison, Inc., and Northeast Utilities

I

Consolidated Edison Company of New York, Inc. (CEI of NY), a subsidiary of Consolidated Edison, Inc. (CEI), holds 100-percent ownership interest in Indian Point Nuclear Generating Units 1 and 2 (Indian Point Units 1 and 2). CEI of NY holds the facility Operating Licenses Nos. DPR–5 and DPR–26 issued by the U.S. Atomic Energy Commission pursuant to Part 50 of Title 10 of the Code of Federal Regulations (10 CFR Part 50) on March 26, 1962, for Indian Point Unit 1 and September 28, 1973, for Indian Point Unit 2, respectively. Under these licenses, CEI of NY has the authority to possess and operate Indian Point Units 1 and 2, which are located in Westchester County, New York.

II

Pursuant to Section 184 of the Atomic Energy Act of 1954 (the Act), as amended, and 10 CFR 50.80, CEI of NY and North Atlantic Energy Service Corporation and Northeast Nuclear Energy Company, subsidiaries of Northeast Utilities (NU), jointly filed an application dated January 13, 2000, as supplemented by a letter dated May 2, 2000 (collectively herein referred to as the application), requesting the Commission's approval of the indirect transfer of the licenses for the Indian Point units in connection with the proposed corporate mergers involving CEI and NU. The applicants informed the Commission that CEI and NU were in the process of implementing a corporate merger in which CEI and NU will be combined through two simultaneous mergers: the merger of CEI into New CEI, a Delaware corporation, and the merger of an indirect, wholly owned subsidiary of New CEI with NU. New CEI would become the parent corporation to, and sole owner of, CEI of NY and NU. CEI of NY would continue to remain a 100-percent owner and possession licensee as well as the operator of Indian Point Units 1 and 2. The NU indirect interests in the Millstone Nuclear Power Station Units 1, 2, and 3 and the Seabrook Station Unit 1 will be the subject of separate orders. CEI of NY would remain an ''electric utility''as defined in 10 CFR 50.2 engaged in the generation, transmission, and distribution of electric energy for wholesale and retail sale. No physical changes to the facilities or operational changes are being proposed in the application. Notice of this request for approval was published in the **Federal Register** on April 7, 2000 (65 FR 18378). No hearing requests were received concerning Indian Point Units 1 and 2.

Under 10 CFR 50.80, no license shall be transferred, directly or indirectly, through transfer of control of the license, unless the Commission gives its consent in writing. Upon review of the information submitted in the application and other information before the Commission, the NRC staff has determined that the corporate merger will not affect the qualifications of CEI of NY as the holder of the Indian Point Units 1 and 2 licenses referenced above, and that the indirect transfer of the licenses, to the extent effected by the merger, is otherwise consistent with applicable provisions of law, regulations, and orders issued by the Commission subject to the conditions set forth herein. These findings are supported by a Safety Evaluation dated August 22, 2000.

III

Accordingly, pursuant to Sections 161b, 161i, 161o, and 184 of the Atomic Energy Act of 1954, as amended, 42 USC §§ 2201(b), 2201(i), 2201(o), and 2234; and 10 CFR 50.80, *It Is Hereby*

Ordered, That the application regarding the indirect license transfers referenced above is approved subject to the following conditions: (1) CEI of NY shall provide the Director of the Office of Nuclear Reactor Regulation a copy of any application, at the time it is filed, to transfer (excluding grants of security interests or liens) from CEI of NY to its proposed parent or to any other affiliated company, facilities for the production, transmission, or distribution of electric energy having a depreciated book value exceeding ten percent (10%) of CEI of NY's consolidated net utility plant, as recorded on CEI of NY's books of accounts, and (2) should the corporate merger of CEI and NU not be completed by December 31, 2001, this Order shall become null and void, provided, however, on application and for good cause shown, such date may be extended.

For further details with respect to this action, see the initial application dated January 13, 2000, the supplemental letter dated May 2, 2000, and the Safety Evaluation dated August 22, 2000, which are available for public inspection at the Commission's Public Document Room, the Gelman Building, 2120 L Street, NW., Washington, DC, and accessible electronically through the ADAMS Public Electronic Reading Room link at the NRC Web site *(http://www.NRC.gov)*.

Dated at Rockville, Maryland, this 22nd day of August 2000.

For the Nuclear Regulatory Commission.

Samuel J. Collins,

Director, Office of Nuclear Reactor Regulation.

[FR Doc. 00–21882 Filed 8–25–00; 8:45 am]

BILLING CODE 7590–01–P

NUCLEAR REGULATORY COMMISSION

[Louisiana License LA–7396–L01]

Gulf Coast International Inspection, Inc.— Houma, LA; Environmental Assessment, Finding of No Significant Impact, and Notice of Opportunity for a Hearing

The Nuclear Regulatory Commission is considering authorizing Gulf Coast International Inspection, Inc. (Gulf Coast) an exemption to use pipeliners on lay barges in the Gulf of Mexico.

Environmental Assessment

Identification of the Proposed Action

Gulf Coast International Inspection Incorporated (Gulf Coast) is licensed by the State of Louisiana to conduct industrial radiography operations. They have requested, in their letter dated November 16, 1999, that the United States Nuclear Regulatory Commission (NRC) grant them reciprocity and an exemption from 10 CFR 34.20 (a)(1) to use their pipeliner type radiography cameras (pipeliners) for pipeline radiography on lay barges in areas under exclusive federal jurisdiction in the Gulf of Mexico. Pipeliners are older model radiography cameras that do not meet the requirements of 10 CFR 34.20(a)(1) which requires equipment used in industrial radiographic operations to meet the requirements in ANSI N432–1980, ''Radiological Safety for the Design and Construction of Apparatus for Gamma Radiography (ANSI N432–1980),'' (published as NBS Handbook 136, issued January 1981). Gulf Coast is allowed to conduct similar operations in the State of Louisiana under an exemption granted in license number LA–7396–L01.

Need for the Proposed Action

The exemption is needed so that Gulf Coast can carry out its business of pipeline radiography on lay barges for the continuation of pipeline operations in the oil and gas industry. Gulf Coast contends that due to the design of the lay barges and the limited space that is available, the pipeliner is the only device that will keep up with production on a lay barge and provide a safe working environment for their radiographers and surrounding barge personnel.

Environmental Impacts of the Proposed Action

There will be no significant environmental impact from the proposed action due to the fact that no material is being released into the environment and all of the material is wholly contained within the radiography camera which is only used in a fully enclosed radiography stall on a lay barge. During normal operation the radiation dose will not be significantly greater than an approved radiography camera's normal operating external radiation dose levels.

Alternatives to the Proposed Action

As required by Section 102(2)(E) of NEPA (42 U.S.C. 4322(2)(E)), possible alternatives to the final action have been considered. The only alternative is to deny the exemption. This option was not considered practical because there would be no gain in protecting the human environment. Denying the exemption request would force Gulf Coast to revert to radiography cameras that are designed to meet ANSI N432–1980, but these cameras are not practical for radiography operations on a lay barge. These newer cameras would be similar to the pipeliners in that their radioactive material is housed as a sealed source and there would be no release of material to the environment. However, these newer cameras have associated equipment, such as a drive cable and guide tube, that would require additional space to perform radiography on pipelines. This equipment becomes cumbersome and may get in the way as the pipe is moved through the lay barge. In the newer devices, the sealed source would have to be cranked out of the shielded position in the camera housing through a guide tube to the exposure head location where the radiograph takes place. This ''crank out'' action causes the source to be unshielded while the source is cranked out to the exposure head. This results in an increase in the ''restricted area'' boundary causing a greater potential for non-radiography personnel on the lay barge to become exposed to radiation.

Alternative Use of Resources

No alternative use of resources was considered due to the reasons stated above.

Agencies and Persons Consulted

The State of Louisiana was contacted by telephone on August 7, 2000 regarding this proposed action. The State of Louisiana is in agreement with the proposed action and had no additional comments.

Identification of Sources Used

Letter from Gulf Coast International Inspection, Inc. to U.S. Nuclear Regulatory Commission, Region IV, Re: Louisiana License No. LA–7396–L01, dated November 16, 1999.

Finding of No Significant Impact

Based on the above environmental assessment, the Commission has concluded that environmental impacts that would be created by the proposed action would not have a significant effect on the quality of the human environment and does not warrant the preparation of an Environmental Impact Statement. Accordingly, it has been determined that a Finding of No Significant Impact is appropriate.

Gulf Coast's application is available for inspection and copying for a fee in the Region IV Public Document Room, 611 Ryan Plaza Drive, Suite 400, Arlington, TX 76011–8064. The documents may also be viewed in the Agency-wide Documents Access and Management System (ADAMS) located on the NRC website at www.nrc.gov.

Opportunity for a Hearing

Any person whose interest may be affected by the issuance of this action may file a request for a hearing. Any request for hearing must be filed with the Office of the Secretary, U.S. Nuclear Regulatory Commission, Washington, DC 20555, within 30 days of the publication of this notice in the **Federal Register**; be served on the NRC staff (Executive Director for Operations, One White Flint North, 11555 Rockville Pike, Rockville, Maryland 20852), and on the licensee (Gulf Coast International Inspection, Inc., 227 Clendenning Road, Houma, LA 70363); and must comply with the requirements for requesting a hearing set forth in the Commission's regulations, 10 CFR Part 2, Subpart L, ''Information Hearing Procedures for Adjudications in Materials Licensing Proceedings.''

These requirements, which the request must address in detail, are:

1. The interest of the requestor in the proceeding;

2. How that interest may be affected by the results of the proceeding (including the reasons why the requestor should be permitted a hearing);

3. The requestor's areas of concern about the licensing activity that is the subject matter of the proceeding; and

4. The circumstances establishing that the request for hearing is timely—that is, filed within 30 days of the date of this notice.

In addressing how the requestor's interest may be affected by the proceeding, the request should describe the nature of the requestor's right under the Atomic Energy Act of 1954, as amended, to be made a party to the proceeding; the nature and extent of the requestor's property, financial, or other (*i.e.*, health, safety) interest in the proceeding; and the possible effect of any order that may be entered in the proceeding upon the requestor's interest.

Dated at Rockville, Maryland, this 15th day of August, 2000.

For the Nuclear Regualtory Commission.

John W.N. Hickey,

Chief, Material Safety and Inspection Branch, Division of Industrial and Medical Nuclear Safety, Office of Nuclear Material Safety and Safeguards.

[FR Doc. 00–21884 Filed 8–25–00; 8:45 am]

BILLING CODE 7590–01–P

NUCLEAR REGULATORY COMMISSION

[Docket Nos. 50–321 and 50–366]

Southern Nuclear Operating Company, Inc.; Edwin I. Hatch Nuclear Plant, Units 1 and 2; Environmental Assessment and Finding of No Significant Impact

The U.S. Nuclear Regulatory Commission (the Commission) is considering issuance of an exemption from certain requirements of Title 10 of the Code of Federal Regulations (10 CFR) Part 50, Section 50.60(a) to the Southern Nuclear Operating Company, Inc. (the licensee) for operation of the Edwin I. Hatch Nuclear Plant, Units 1 and 2 located in Appling County, Georgia.

Environmental Assessment

Identification of the Proposed Action

The proposed action would exempt the licensee from certain provisions of 10 CFR Part 50, Section 50.60(a) and 10 CFR Part 50, Appendix G. The NRC has established requirements in 10 CFR Part 50 to protect the integrity of the reactor coolant pressure boundary (RCPB) in nuclear power plants. As part of these requirements, 10 CFR Part 50, Appendix G requires that pressure-temperature (P–T) limits be established for reactor pressure vessels (RPVs) during normal operating and hydrostatic pressure and leak rate test conditions. Specifically, 10 CFR Part 50, Appendix G states that ''[t]he appropriate requirements * * * on pressure-temperature limits and minimum permissible temperature must be met for all conditions.'' Appendix G of 10 CFR Part 50 specifies that the requirements for these limits are the American Society of Mechanical Engineers (ASME) Code, Section XI, Appendix G limits.

Pressurized water reactor licensees have installed cold overpressure mitigation systems/low temperature overpressure protection (LTOP) systems in order to protect the RCPB from being operated outside of the boundaries established by the P–T limit curves and to provide pressure relief on the RCPB during low temperature overpressurization events. The licensee is required by the Hatch Technical Specifications (TS) to update and submit the changes to its LTOP setpoints whenever the licensee is requesting approval for amendments to the P–T limit curves in the Hatch TS.

Therefore, in order to address provisions of amendments to the TS P–T limits and LTOP curves, the licensee requested in its submittal dated June 1, 2000, that the staff exempt Hatch, Units 1 and 2 from application of specific requirements of 10 CFR Part 50, Section 50.60(a) and 10 CFR Part 50, Appendix G and substitute use of two ASME Code Cases as follows:

1. N–588 for determining the reactor vessel P–T limits derived from postulating a circumferentially-oriented reference flaw in a circumferential weld, and

2. N–640 as an alternate reference fracture toughness for reactor vessel materials for use in determining the P–T limits.

The proposed action is in accordance with the licensee's application for exemption contained a submittal dated June 1, 2000, and is needed to support the TS amendments that are contained in the same submittal and are being processed separately. The proposed amendments will revise the P–T limits of TS 3.4.9 for Hatch, Units 1 and 2 related to the heatup, cooldown, and inservice test limitations for the Reactor Coolant System of each unit to a maximum of 54 Effective Full Power Years (EFPY).

The Need for the Proposed Action

ASME Code Case N–588 and Code Case N–640 are needed to revise the method used to determine the RCS P–T limits since continued use of the present curves unnecessarily restricts the P–T operating window. Application of the codes will, therefore, relax the LTOP operating window and reduce potential challenges to the reactor coolant system power operated relief valves.

In the associated exemption, the staff has determined that, pursuant to 10 CFR 50.12(a)(2)(ii), the underlying purpose of the regulation will continue to be served by the implementation of these Code Cases.

Environmental Impacts of the Proposed Action

The Commission has completed its evaluation of the proposed action and concludes that the exemption described above would provide an adequate margin of safety against brittle failure of the Hatch, Units 1 and 2 reactor vessels.

The proposed action will not significantly increase the probability or consequences of accidents, no changes are being made in the types of any effluents that may be released offsite, and there is no significant increase in occupational or public radiation exposure. Therefore, there are no significant radiological environmental impacts associated with the proposed action.

With regard to potential nonradiological environmental impacts, the proposed action does not involve any historic sites. It does not affect nonradiological plant effluents and has no other environmental impacts. Therefore, there are no significant nonradiological impacts associated with the proposed action.

Accordingly, the Commission concludes that there are no significant environmental impacts associated with the proposed action.

Alternatives to the Proposed Action

As an alternative to the proposed action, the staff considered denial of the proposed action (*i.e.*, the ''no-action'' alternative). Denial of the application would result in no change in current environmental impacts. The environmental impacts of the proposed action and the alternative action are similar.

Alternative Use of Resources

This action does not involve the use of any resources not previously considered in the Final Environmental Statement for the Edwin I. Hatch Nuclear Plant, Units 1 and 2 dated October 1972.

Agencies and Persons Consulted

In accordance with its stated policy, on August 11, 2000, the staff consulted with the Georgia State official, James Setser, regarding the environmental impact of the proposed action. The State official had no comments.

Finding of No Significant Impact

On the basis of the environmental assessment, the Commission concludes that the proposed action will not have a significant effect on the quality of the human environment. Accordingly, the Commission has determined not to prepare an environmental impact statement for the proposed action.

For further details with respect to the proposed action, see the licensee's letter dated June 1, 2000, which is available for public inspection at the Commission's Public Document Room, The Gelman Building, 2120 L Street, NW., Washington, DC. Publically available records will be accessible electronically from the ADAMS Public Library component on the NRC Web site, *http://www.nrc.gov* (the Electronic Reading Room).

Dated at Rockville, Maryland, this 22nd day of August 2000.

For the Nuclear Regulatory Commission.

Richard L. Emch, Jr.,

Chief, Section 1, Project Directorate II, Division of Licensing Project Management, Office of Nuclear Reactor Regulation.

[FR Doc. 00–21885 Filed 8–25–00; 8:45 am]

BILLING CODE 7590–01–P

NUCLEAR REGULATORY COMMISSION

[Docket No. 030–34751]

VA Medical Center in Brooklyn, NY: License Amendment

AGENCY: Nuclear Regulatory Commission.

ACTION: Notice Of Intent to Amend Byproduct Materials License for the St. Albans Extended Care Facility in Queens, NY: Environmental Assessment, Finding of No Significant Impact, and Opportunity for Hearing.

SUMMARY: The St. Albans Extended Care Center (ECC), operated by the Department of Veterans Affairs (VA) Medical Center in Brooklyn, was formerly a U.S. Navy hospital. The Navy was authorized by the U.S. Atomic Energy Commission under various licenses from 1956 through 1973 to use radioactive materials for nuclear medicine purposes at the site. The Navy's license was terminated in 1973 based on previous contamination survey records. In the early 1990s the Nuclear Regulatory Commission (NRC) conducted a review of terminated licenses, in which the NRC's contractor, Oak Ridge National Laboratory, identified St. Albans as a formerly licensed site which should be reviewed to determine if residual contamination remained after the license was terminated. As a result of this review, strontium-90 (90Sr) and tritium (3H) contamination was identified in the former nuclear medicine facilities at St. Albans. In 1993 the U.S. Army Corps of Engineers (the Corps) stabilized the site, isolating the sewer lines and sealing the affected rooms. The Navy and the Corps conducted subsequent characterization surveys of the facilities, and in 1998 NRC issued a license to the VA for decommissioning of the facility. In 1999 the Corps submitted for the VA a decommissioning plan for the St. Albans facility proposing derived concentration guideline levels (DCGLs) for residual contamination values acceptable to release the facilities for unrestricted use and termination of the NRC license. The final decommissioning plan was submitted on July 7, 2000. NRC plans to amend the St. Albans license to incorporate acceptable DCGLs. Upon approval of this license amendment, residual contamination limits which satisfy the requirements of Subpart E, Title 10, Part 20 of the Code of Federal Regulations, will be applied to the license.

Introduction

The St. Albans ECC incorporates 15 buildings on 55 acres located at 179th Street and Linden Boulevard in Queens, NY. The affected area of the St. Albans ECC consists of the former nuclear medicine laboratory and associated rooms in the basement of one building, identified as Building 90. A Decommissioning Plan was developed for the VA Medical Center in Brooklyn by the Corps. The Corps is responsible for performing the decommissioning under the Formerly Utilized Defense Sites (FUDS) program.

In August 1998, the NRC issued a license to the VA for decontamination and decommissioning of the St. Albans facility. During 1999 the Corps conducted a characterization survey of the affected areas and developed a decommissioning plan. The survey confirmed the presence of 90Sr contamination and traces of 3H contamination in portions of the facility, and was used as the basis for development of the Decommissioning Plan. In December 1999 the Corps proposed DCGLs to be used as radiological cleanup criteria for decommissioning and NRC termination of the license. Revised DCGLs for 90Sr contamination in soil were proposed by the Corps in June 2000.

The licensee's objective for the decommissioning project, as stated in the decommissioning plan, is to decontaminate and remediate the affected areas of Building 90 sufficiently to enable unrestricted use, while ensuring exposures to occupational workers and the public during the decommissioning are maintained as low as reasonably achievable (ALARA).

Proposed Action

The proposed action is to amend NRC Radioactive Materials License Number 31–02892–06 to incorporate appropriate and acceptable DCGLs into the license. The DCGLs will define the maximum amount of residual contamination, such as on building surfaces and in affected soil, that will satisfy the NRC requirements of Subpart E, 10CFR20, Radiological Criteria for License Termination. The DCGLs proposed to be incorporated into the license are as follows:

	Release of equipment & materials (surfaces)	Building surfaces	Soils
Value	200/1000 /3000 dpm/100 cm2removable/total/max.	90Sr: 8700 dpm/100 cm2 3H: 1.2 E8 dpm/100 cm2.	90Sr: 11 pCi/g 3H: Not Applicable (see note)
Reference	1993, *NRC Guidelines for Decon of Facilities and Equipment Prior to Release. . . .* (also RG 1.86).	63FR222 pp. 64132–64134 (Nov 18, 1998).	R.F.Weston/Corps of Engineers letter dated June 7, 2000.

Note: 3H was detected only on the surface of one sink, with none detected in soils. Therefore no 3H DCGL is necessary for soil.

The Need For The Proposed Action

The St. Albans site has been stabilized to prevent contamination from spreading beyond its current locations. Access to the contaminated areas is controlled to assure the health and safety of workers and the public. Decontamination and decommissioning are necessary to allow unrestricted use of the facilities and to eliminate the possibility that the active controls and stabilized conditions can degrade. No ongoing licensed activities are occurring in the facilities, and NRC regulations in 10 CFR 30.36 require the site to be decommissioned. Subpart E of 10 CFR Part 20 specifies a site will be considered acceptable for unrestricted use if the residual radioactivity that is distinguishable from background radiation results in a TEDE (total effective dose equivalent) to an average member of the critical group that does not exceed 25 mrem (0.25 mSv) per year, including that from groundwater sources of drinking water, and that the residual radioactivity has been reduced to levels that are as low as reasonably achievable (ALARA). The NRC has determined that the proposed DCGLs will satisfy the regulations in Subpart E of 10 CFR Part 20.

Alternatives To Proposed Action

NRC staff considered ''no action'' (not amending the license) as an alternative to the proposed action. The ''no-action'' alternative would result in no clear definition in the license of the acceptable levels of radioactive contamination relating to the NRC license termination criteria, as stated in Subpart E of 10 CFR Part 20.

Environmental Impacts of Proposed Action

The proposed action is to amend this license to incorporate appropriate and acceptable DCGLs into the license, to be used for decommissioning the site. Decommissioning and decontamination of the St. Albans facility to the proposed DCGL concentrations is expected to have no significant impact on the environment. Remediation activities, in fact, are expected to reduce the potential for the release of radiological contamination to the environment, and will enable termination of the license and release of the facilities for unrestricted use.

Contamination controls will be implemented during decommissioning to prevent airborne and surface contamination from escaping the remediation work areas, and therefore no release of airborne contamination is anticipated. However, the potential will exist for generating airborne radioactive material during decontamination, removal and handling of contaminated materials. If produced, any effluent from the proposed decommissioning activities will be limited in accordance with NRC requirements in 10 CFR Part 20 or contained onsite or treated to reduce contamination to acceptable levels before release, and shall be maintained ALARA. Release of contaminated liquid effluents are not expected to occur during the work.

The Corps and subcontractors will perform the remediation under the VA license, with the VA overseeing the activities and maintaining primary responsibility. The Brooklyn VA has adequate radiation protection procedures and capabilities, and will implement an acceptable program to keep exposure to radioactive materials as low as reasonably achievable (ALARA). As noted above, the Corps has prepared a decommissioning plan describing the work to be performed, and work activities are not anticipated to result in a dose to workers or the public in excess of the 10 CFR Part 20 limits. Past experiences with decommissioning activities at sites similar to St. Albans indicate that public and worker exposure will be far below the limits found in 10 CFR 20.

The proposed action will result in the irreversible use of energy resources during excavation, decontamination, and handling of radioactive material. There are no reasonable alternatives to these resource uses and there are no unresolved conflicts concerning alternative uses of available resources.

Agencies and Individuals Consulted

This environmental assessment (EA) was prepared entirely by NRC staff and coordinated with the following agencies: New York State Department of Environmental Conservation, New York State Office of Parks, Recreation and Historical Preservation, New York City Department of Health, U.S. Environmental Protection Agency, and the U.S. Fish and Wildlife Service. No other sources were used beyond those referenced in this EA.

Conclusions

Decommissioning of the site to the DCGLs proposed for this action will result in reduced residual contamination levels in the facility, enabling release of the facilities for unrestricted use and termination of the radioactive materials license. No radiologically contaminated effluents are expected during the decommissioning. Occupational doses to decommissioning workers are expected to be low and well within the limits of 10 CFR Part 20. No radiation exposure to any member of the public is expected, and public exposure will therefore also be less than the applicable public exposure limits of 10 CFR Part 20. Therefore, the environmental impacts from the proposed action are expected to be insignificant.

Finding of no Significant Impact

NRC has prepared this EA in support of the proposed license amendment to incorporate appropriate and acceptable DCGLs and to use the proposed DCGLs for the planned decommissioning by the Brooklyn VA at the St. Albans Extended Care Center. On the basis of the EA, NRC has concluded that this licensing action will not significantly affect the quality of the human environment and has determined not to prepare an environmental impact statement for the proposed action.

The above documents related to this proposed action are available for public inspection and copying at the Commission's Public Document Room at the Gelman Building, 2120 L Street NW, Washington, DC.

Opportunity for a Hearing

The NRC hereby provides notice that this is a proceeding on an application for a license amendment falling within the scope of Subpart L, Informal Hearing

Procedures for Adjudications in Materials Licensing Proceedings, of NRC's rules and practice for domestic licensing proceedings in 10 CFR Part 2. Pursuant to 10 CFR 2.1205(a), any person whose interest may be affected by this proceeding may file a request for a hearing in accordance with 10 CFR 2.1205(d). A request for a hearing must be filed within thirty (30) days of the date of publication of the **Federal Register** Notice.

The request for a hearing must be filed with the Office of the Secretary either:

1. By delivery to the Docketing and Service Branch of the Office of the Secretary at One White Flint North, 11555 Rockville Pike, Rockville, MD 20852–2738; or

2. By mail or telegram addressed to the Secretary, U. S. Nuclear Regulatory Commission, Washington, DC 20555. Attention: Docketing and Service Branch.

In addition to meeting other applicable requirements of 10 CFR Part 2 of the NRC's regulations, a request for a hearing filed by a person other than the applicant must describe in detail:

1. The interest of the requestor in the proceeding;

2. How that interest may be affected by the results of the proceeding, including the reasons why the requestor should be permitted a hearing, with particular reference to the factors set out in 10 CFR 2.1205(h);

3. The requestor's areas of concern about the licensing activity that is the subject matter of the proceeding; and

4. The circumstances establishing that the request for a hearing is timely in accordance with 10 CFR 2.1205(d).

In accordance with 10 CFR 2.1205(f), each request for a hearing must also be served, by delivering it personally or by mail, to:

1. The licensee, Mr. James Mallen, Chief, Engineering Services, VA Medical Center in Brooklyn, 800 Poly Place, Brooklyn, NY 11209, and

2. The NRC staff, by delivery to the Executive Director for Operations, One White Flint North, 11555 Rockville Pike, Rockville, MD, 20852, or by mail, addressed to the Executive Director for Operations, U.S. Nuclear Regulatory Commission, Washington, DC 20555.

FOR FURTHER INFORMATION CONTACT: Supporting documentation for the proposed action is available for inspection at:

1. NRC's Public Electronic Reading Room at http://www.nrc.gov/NRC/ADAMS/index.html, and

2. At the Commission's Public Document Room, 2120 L Street NW, Washington, D.C. 20555.

Any questions with respect to this action should be referred to Todd Jackson, Decommissioning and Laboratory Branch, Division of Nuclear Materials Safety, Region I at (610) 337–5308.

Dated at King of Prussia, Pennsylvania this 21st day of August 2000.

For the US Nuclear Regulatory Commission.

George Pangburn,

Director, Division of Nuclear Materials Safety, Region I.

[FR Doc. 00–21886 Filed 8–25–00; 8:45 am]

BILLING CODE 7590–01–P

OFFICE OF MANAGEMENT AND BUDGET

Cumulative Report on Rescissions and Deferrals

August 1, 2000.

Section 1014(e) of the Congressional Budget and Impoundment Control Act of 1974 (Public Law 93–344) requires a monthly report listing all budget authority for the current fiscal year for which, as of the first day of the month, a special message had been transmitted to Congress.

This report gives the status, as of August 1, 2000, of three rescission proposals and two deferrals contained in one special message for FY 2000. The message was transmitted to Congress on February 9, 2000.

Rescissions (Attachments A and C)

As of August 1, 2000, three rescission proposals totaling $128 million have been transmitted to the Congress. Attachment C shows the status of the FY 2000 rescission proposals.

Deferrals (Attachments B and D)

As of August 1, 2000, $281 million in budget authority was being deferred from obligation. Attachment D shows the status of each deferral reported during FY 2000.

Information From Special Message

The special message containing information on the rescission proposals and deferrals that are covered by this cumulative report is printed in the edition of the **Federal Register** cited below:

65 FR 9017, Wednesday, February 23, 2000.

Sylvia M. Mathews,

Acting Director.

Attachment A

STATUS OF FY 2000 RESCISSIONS

[In millions of dollars]

	Budgetary resources
Rescissions proposed by the President	128.0
Rejected by the Congress	.....
Pending before the Congress for more than 45 days (available for obligation)	−128.0
Currently before the Congress for less than 45 days	.....

Attachment B

STATUS OF FY 2000 DEFERRALS

[In millions of dollars]

	Budgetary resources
Deferrals proposed by the President	1,622.0
Routine Executive releases through August 1, 2000 (OMB/Agency releases of $1,357.0 million, partially offset by a cumulative positive adjustment of $16.1 million)	−1,340.8
Overturned by the Congress	.....
Currently before the Congress	281.2

BILLING CODE 3110–01–P

ATTACHMENT C
Status of FY 2000 Rescission Proposals - As of August 1, 2000
(Amounts in thousands of dollars)

Agency/Bureau/Account	Rescission Number	Amounts Pending Before Congress: Less than 45 days	Amounts Pending Before Congress: More than 45 days	Date of Message	Previously Withheld and Made Available	Date Made Available	Amount Rescinded	Congressional Action
DEPARTMENT OF ENERGY								
Atomic Energy Defense Activities								
Defense Environmental Restoration and Waste Management.	R00-1		13,000	2-9-00	*			
Energy Programs								
SPR Petroleum Account	R00-2		12,000	2-9-00	*			
DEPARTMENT OF HOUSING AND URBAN DEVELOPMENT								
Public and Indian Housing								
Housing Certificate Fund	R00-3		103,000	2-9-00	*			
TOTAL, RESCISSIONS			**128,000**					

* No funds were withheld.

ATTACHMENT D
Status of FY 2000 Deferrals - As of August 1, 2000
(Amounts in thousands of dollars)

Agency/Bureau/Account	Deferral Number	Amounts Transmitted: Original Request	Amounts Transmitted: Subsequent Change (+)	Date of Message	Releases(-): Cumulative OMB/ Agency	Releases(-): Congressionally Required	Congressional Action	Cumulative Adjustments	Amount Deferred as of 8-1-00
DEPARTMENT OF STATE									
Other									
United States Emergency Refugee and Migration Assistance Fund	D00-1	172,858		2-9-00	27,548				145,310
INTERNATIONAL ASSISTANCE PROGRAMS									
International Security Assistance Economic Support Fund	D00-2	1,449,159		2-9-00	1,329,416			16,133	135,876
TOTAL, DEFERRALS		**1,622,017**			**1,356,964**			**16,133**	**281,186**

[FR Doc. 00–21846 Filed 8–25–00; 8:45 am]

BILLING CODE 3110–01–C

SECURITIES AND EXCHANGE COMMISSION

[Release No. 35–27217]

Filings Under the Public Utility Holding Company Act of 1935, as amended (''Act'')

August 21, 2000.

Notice is hereby given that the following filing(s) has/have been made with the Commission pursuant to provisions of the Act and rules promulgated under the Act. All interested persons are referred to the application(s) and/or declaration(s) for complete statements of the proposed transaction(s) summarized below. The application(s) and/or declaration(s) and any amendment(s) is/are available for public inspection through the Commission's Branch of Public Reference.

Interested persons wishing to comment or request a hearing on the application(s) and/or declaration(s) should submit their views in writing by September 14, 2000, to the Secretary, Securities and Exchange Commission, Washington, DC 20549–0609, and serve a copy on the relevant applicant(s) and/or declarant(s) at the address(es) specified below. Proof of service (by affidavit or, in the case of an attorney at law, by certificate) should be filed with the request. Any request for hearing should identify specifically the issues of facts or law that are disputed. A person who so requests will be notified of any hearing, if ordered, and will receive a copy of any notice or order issued in the matter. After September 14, 2000, the application(s) and/or declaration(s), as filed or as amended, may be granted and/or permitted to become effective.

Dominion Resources, Inc. (70–9477)

Dominion Resources (''DRI''), a registered holding company, and Consolidated Natural Gas Company (''CNG''), a subsidiary registered holding company, both located at 120 Tredegar Street, Richmond, Virginia, have filed a post-effective amendment under section 12(d) of the Act and rules 43 and 44 under the Act to an application-declaration previously filed under sections 6(a), 7, 9(a), 10, 12(d), 13(b), 32 and 33 of the Act and rules 53, 54, 87, 88, 90 and 91 under the Act (''Application'').

By order dated December 15, 1999 (HCAR 27113), the Commission authorized the merger of DRI and CNG (''Merger Order''). In the Merger Order the Commission noted that DRI would, within a year of the merger, undertake to sell Virginia Natural Gas (''VNG''), a wholly owned indirect subsidiary of DRI and a wholly owned direct subsidiary of CNG. The Application did not contain any of the terms of the contemplated sale required by section 12(d) of the Act. On May 8, 2000, DRI, CNG and VNG entered into a Stock Purchase Agreement (''SPA'') with AGLR Resources (''AGLR''), a Georgia holding company which is currently exempt from all provisions of the Act except section 9(a)(2) under section 3(a)(1) by rule 2 under the Act. Under the SPA, DRI and CNG agreed to sell, and AGLR agreed to purchase, all of the outstanding shares of capital stock of VNG for a purchase price of $550 million, subject to adjustment described in the SPA.[1]

AGL Resources Inc. (70–9707)

AGL Resources Inc. (''AGL Resources''), an exempt Georgia gas public utility holding company, its public utility subsidiary companies, Atlanta Gas Light Company (''AGLC''), a Georgia gas distribution company, Chattanooga Gas Company (''Chattanooga Gas''), a wholly owned Tennessee gas utility subsidiary company of AGLC, located at 817 West Peachtree Street, NW., Atlanta, GA 30308, and Virginia Natural Gas, Inc. (''VNG''), a Virginia gas retail and distribution company, located at 5100 East Virginia Beach Boulevard, Norfolk, Virginia 23502, have filed an application-declaration under sections 6(a), 7, 9(a), 10, 12, and 13 of the Public Utility Holding Company Act of 1935 (the ''Act''), as amended, and rules 42, 43, 45, 46, 52, 53 and 88 under the Act.

Applicants seek authority for AGL Resources, a holding company exempt from all provisions of the Act except section 9(a)(2) under section 3(a)(1) and rule 2 under the Act, to acquire VNG as a wholly owned subsidiary (the ''Acquisition''). VNG is owned indirectly by Dominion Resources, Inc., (''Dominion Resources'') a registered holding company.[2] Applicants also request authority for AGL Resources to restructure its utility holding by acquiring all outstanding shares of Chattanooga from AGLC and retaining it as a direct subsidiary.[3] In addition, AGL Resources seeks authority to retain its non-utility businesses and investments.

After the Acquisition, AGL Resources will register with the Securities and Exchange Commission as a holding company under Section 5 of the Act. Applicants seek authorization for various financing, intrasystem service and other transactions by companies in the AGL Resources system after the Acquisition in connection with the operation of a registered holding company.

For the fiscal year ended September 30, 1999, AGL Resources reported total assets of $1,969 million, net utility plant assets of $1,517 million, total operating revenues of $1,069 million, and net income of $74 million.

AGL Resources has an ownership interest in several nonutility businesses.[4] AGL Resources also holds interests in the following direct or indirect subsidiary companies that are currently inactive or holding companies for nonutility businesses.[5]

AGLC is an unbundled gas distribution company serving approximately 240 communities throughout Georgia including Atlanta, Athens, Augusta, Brunswick, Macon, Rome, Savannah and Valdosta. As of October 1, 1999, AGLC was delivering natural gas to approximately 1.4 million residential and small business end-use customers in Georgia on behalf of approximately 15 gas marketers and to approximately 700 large commercial and industrial customers on behalf of approximately 40 poolers. As of the fiscal year ending September 30, 1999,

[1] In file No. 70–9707 (June 22, 2000), AGLR is seeking authority to purchase VNG. AGLR will subsequently register as a holding company under the Act. A notice of that transaction is being issued simultaneously with this notice.

[2] In file No. 70–9477 (June 29, 2000), Dominion Resources is seeking authority to divest ownership of VNG. A notice of that transaction is being issued simultaneously with this notice.

[3] Applicants state that AGL Resources is evaluating whether to restructure its holdings.

[4] The businesses are: AGL Energy Services, Inc., a gas supply services company that buys and sells natural gas primarily for Chattanooga Gas, and its wholly owned subsidiary, Georgia Gas Company, a gas-related company that owns minor interests in natural gas production activities; SouthStar Energy Services LLC, a marketer of natural gas and related services; AGL Peaking Services, Inc., which owns a 50% interest in Etowah LNG Company LLC, a company formed for the purpose of constructing, owning, and operating a liquefied natural gas peaking facility; AGL Interstate Pipeline Company, which owns 50% of Cumberland Pipeline Company; AGL Investments, Inc., an intermediate holding company for investments in AGL Propane, Inc., a seller and marketer of propane tanks, gas appliances and wholesale propane; Trustees Investments, Inc., which owns Trustees Gardens, a residential and retail development located in Savannah, Georgia on and adjacent to a former manufactured gas plant site owned by AGLC and Trustees Investments, Inc.; Utilipro, Inc., which sells integrated customer care solutions and billing services to energy marketers; and AGL Consumer Services, Inc., which markets appliance warranty contracts, energy management systems and other energy-related consumer services to residential and commercial customers.

[5] AGL Rome Holdings, Inc., Georgia Engine Sales and Service Co., Peachtree Pipeline Company, Atlanta Gas Light Services, Inc., Georgia Natural Gas Company, TES, Inc., Georgia Natural Gas Services, Inc., AGL Gas Marketing, Inc., AGL Power Services, Inc., Georgia Energy Company, and AGL Energy Wise Services, Inc.

the AGLC gas distribution system included approximately 27,381 miles of distribution mains and 26,078 miles of service lines. Since Georgia's 1997 gas deregulation legislation, AGLC stopped selling natural gas but continues to provide intrastate delivery service through its existing pipeline system to end-use customers in Georgia. AGLC reported total assets of $1.677 billion, total operating revenues of $466 million and net income of $62 million. As of September 30, 1999, AGL Resources reported consolidated total assets of $1.969 billion of which $1.517 billion consisted of net utility plant assets.

AGLC owns all of the outstanding stock of Chattanooga, a natural gas retail and distribution company in Tennessee. Chattanooga provides gas distribution services to the areas around Chattanooga and Cleveland, Tennessee. As of September 30, 1999, Chattanooga had total assets of $121 million, total operating revenues of $67 million and net income of $4 million.

VNG, a natural gas retail and distribution company, provides services to Norfolk, Newport News, Virginia Beach, Chesapeake, Hampton and Williamsburg, Virginia. VNG has approximately 155 miles of gas transmission pipeline, and two propane air peak shaving plants in Virginia, 4,110 miles of distribution main pipeline and approximately 231,000 services lines and meter sets. For the fiscal year ending December 31, 1999, VNG reported operating revenues of $203 million, net income of $7 million and assets totaling $456 million.

AGL Resources will purchase VNG with cash. The purchase price will be funded from cash on hand and from short-term acquisition ''bridge'' financing. Applicants expect that the ''bridge'' financing will be financed with longer-term debt or preferred securities in the future. AGL Resources expects that funding the Acquisition in this manner will allow it to retain its investment grade status without an equity offering.

The Acquisition will be accounted for under the purchase method of accounting. The excess of the purchase price and assumed liabilities over the value of VNG's assets will be recorded on the books of VNG as goodwill. The Applicants seek reauthorization to engage in various financing activities of the AGL System for a period of three years from the date of the Commission's order authorizing these transactions (''Authorization Period''). As described more fully below, the Applicants seek authorization to: (1) Issue and sell through the Authorization Period up to $5 billion of securities at any time outstanding and to issue guarantees and other forms of credit support in an aggregate amount of $500 million at any time outstanding; (2) enter into hedging transactions, including anticipatory hedges, with respect to its indebtedness in order to manage and minimize interest rate costs and to lock-in current interest rates; (3) establish a money pool for the purpose of financing the short-term capital requirements of all the utility subsidiaries and nonutility subsidiaries collectively (the ''Subsidiaries''); (4) change the terms of any wholly-owned Subsidiary's authorized capital stock capitalization; (5) issue the payment of dividends out of capital or unearned surplus by VNG; (6) acquire the equity securities of one or more special purpose subsidiaries (''Financing Subsidiaries'') organized solely to facilitate a financing transaction and to guarantee the securities issued by the Financing Subsidiaries; (7) approve the form of agreement for the allocation of consolidated tax among AGL Resources and the Subsidiaries; (8) issue up to 22 million shares of common stock under dividend reinvestment and stock-based management incentive and employee benefit plans; and (9) issue and sell short-term debt.

I. General Terms and Conditions of Financing

Financings by AGL Resources would be subject to the following limitations: (1) All long-term debt issued to unaffiliated parties will be rated investment grade, or will meet the qualifications for being rated investment grade, by a nationally recognized statistical rating organization; (2) AGL Resources will maintain a consolidated common stock equity as a percentage of total capitalization of at least 30%; (3) the cost of money on debt financings will not exceed 300 basis points over the comparable term U.S. Treasury securities, or, for short-term debt borrowings, 300 basis points over the comparable term London Interbank Offered Rate (''LIBOR''); (4) the maturity of debt will not exceed 50 years; (5) the dividend rate on preferred stock or other types of preferred or equity-linked securities will not exceed at the time of issuance 500 basis points over the yield to maturity of a U.S. Treasury security having a remaining term equal to the term of these securities; (6) the underwriting fees, commissions and other remuneration paid in connection with the non-competitive issue, sale or distribution of a security will not exceed an amount or percentage of the principal or total amount of the security being issued that would be charged to or paid by other companies with a similar credit rating and credit profile in a comparable arms-length credit or financing transaction with an unaffiliated person; and (7) AGL Resources' ''aggregate investment'' in exempt wholesale generators (''EWGs'') and foreign utility companies (''FUCOs'') as defined in Rule 53 under the Act, will not exceed 50% of the consolidated retained earnings of AGL Resources and its Subsidiaries.

The proceeds from all of the financings will be used for general corporate purposes, including refinancing the Acquisition-related debt, financing, in part, investments by and capital expenditures of AGL Resources and its Subsidiaries, funding future investments in EWGs, FUCOs and Rule 58 Subsidiaries, repaying, redeeming, refunding or purchasing any securities issued by AGL Resources or any Subsidiary, and financing the working capital requirements of AGL Resources and its Subsidiaries.

II. AGL Resources External Financing

AGL Resources requests authorization to issue long-term equity and debt securities aggregating not more than $5 billion at any one time outstanding during the Authorization Period. The Securities could include, but would not be limited to, common stock, preferred stock, options, warrants, long- and short-term debt (including commercial paper), convertible securities, subordinated debt, bank borrowings and securities with call or put options. AGL Resources also requests authorization to issue guarantees and enter into interest rate swaps and hedges.

A. Common Stock

AGL Resources requests authorization to issue and sell common stock or, if under employee benefit plans, issue options exercisable for common stock and common stock upon the exercise of options. AGL Resources requests authorization for common stock financings as part of underwriting agreements of a type generally standard in the industry. Public distribution may be made by private negotiation with underwriters, dealers or agents as discussed below or through competitive bidding among underwriters. In addition, sales may be made through private placements or other non-public offerings to one or more persons.

B. Preferred Stock

AGL Resources requests authorization to issue preferred stock from time to time during the Authorization Period. Preferred stock or other types of

preferred or equity-linked securities may be issued in one or more series with these rights, preferences, and priorities as may be designated in the instrument creating each series, as determined by AGL Resources' board of directors. All of these securities would be redeemed no later than 50 years after the issuance. The dividend rate on any series of preferred stock or other preferred securities will not exceed at the time of issuance 500 basis points over the yield to maturity of a U.S. Treasury security having a remaining term equal to the term of these securities. Dividends or distributions on preferred stock or other preferred securities will be made periodically and to the extent funds are legally available for this purpose, but may be made subject to terms that allow the issuer to defer dividend payments for specified periods. Preferred stock or other preferred securities might be convertible or exchangeable into shares of common stock.

C. Long-Term Debt

AGL Resources requests authorization to issue long-term debt. Any long-term debt security would have the maturity, interest rate(s) or methods of determining the same, terms of payment of interest, redemption provisions, and sinking fund terms and other terms and conditions as AGL Resources may determine at the time of issuance.

D. Short-Term Debt

AGL Resource requests authorization to issue short-term debt including, but not limited to, institutional borrowings, commercial paper and bid notes. Proceeds of any short-term debt insurance may be used to refund pre-Acquisition short-term debt and Acquisition-related debt, and to provide financing for general corporate purposes, working capital requirements and Subsidiary capital expenditures until long-term financing can be obtained.

AGL Resources currently has the following short-term debt facilities in place, which may remain in place following the Acquisition: (1) Uncommitted bank lines of credit in the current amount of $50 million; (2) committed lines of bank credit for $125 million with various banks; and (3) AGL Resources is currently negotiating additional bank commitments of approximately $115 million. These amounts are included within the overall authorization amount requested.

AGL Resources requests authorization to sell commercial paper, from time to time, in established domestic or European commercial paper markets. This commercial paper would be sold to dealers at the discount rate or the coupon rate per annum prevailing at the date of issuance for commercial paper of comparable quality and maturities sold to commercial paper dealers generally.

AGL Resources also proposes to establish bank lines of credit directly or indirectly through one or more financing subsidiaries. Loans under these lines would have maturities of less than one year from the date of each borrowing. AGL Resources also requests authority to engage in other types of short-term financing generally available to borrowers with comparable credit ratings as it may deem appropriate in light of its needs and market conditions at the time of issuance.

E. Hedging Transactions and Interest Rate Risk Management

1. *Interest Rate Hedges:* AGL Resources requests authority to enter into, perform, purchase and sell financial instruments intended to manage the volatility of interest rates, including but not limited to interest rate swaps, caps, floors, collars and forward agreements or any other similar agreements. AGL Resources would employ interest rate swaps as a means of prudently managing the risk associated with any of its outstanding debt issued under the authority requested in this application or an applicable exemption by, in effect, synthetically (1) converting variable rate debt to fixed rate debt, (2) converting fixed rate debt to variable rate debt, and (3) limiting the impact of changes in interest rates resulting from variable rate debt. In no case would the notional principal amount of any interest rate swap exceed that of the underlying debt instrument and related interest rate exposure. The underlying interest rate indices of these interest rate swaps would closely correspond to the underlying interest rates indices of AGL Resources' debt to which the interest rate swap relates. AGL Resources would only enter into interest rate swap agreements with counter parties whose senior debt ratings are investment grade as determined by Standard & Poor's, Moody's Investors Service, Inc. or Fitch IBCA, Inc. (''Approved Counterparites'').

2. *Anticipatory Hedges:* AGL Resources also requests authorization to enter into interest rate hedging transactions with respect to anticipated debt offerings (''Anticipatory Hedges''), subject to certain limitations and restrictions. Anticipatory Hedges would only be entered into with Approved Counterparties, and would be used to fix and/or limit the interest rate risk associated with any new issuance through (1) a forward sale of exchange-traded U.S. Treasury futures contracts, U.S. Treasury obligations and/or a forward swap (each a ''Forward Sale''), (2) the purchase of put options on U.S. Treasury obligations (a ''Put Options Purchase''), (3) a Put Options Purchase in combination with the sale of call options on U.S. Treasury obligations (a ''Zero Cost Collar''), (4) transactions involving the purchase or sale, including short sales, of U.S. Treasury obligations, or (5) some combination of a Forward Sale, Put Options Purchase, Zero Cost Collar and/or other derivative or cash transactions, including, but no limited to structured notes, caps, and collars, appropriate for the Anticipatory Hedges.

Anticipatory Hedges might be executed on-exchange (''On-Exchange Trades'') with brokers through the opening of futures and/or options positions traded on the Chicago Board of Trade, the opening of over-the-counter positions with one or more counter parties (''Off-Exchange Trades''), or a combination of On-Exchange Trade and Off-Exchange Trades. AGL Resources will determine the optimal structure of each Anticipatory Hedge transaction at the time of execution.

AGL Resources states that it will comply with standards relating to accounting for derivative transactions as are adopted and implemented by the Financial Accounting Standards Board (''FASB''). In addition, these financial instruments will qualify for hedge accounting treatment under FASB rules.

F. Guarantees

AGL Resources requests authorization to enter into guarantees, obtain letters of credit, enter into expense agreements or otherwise provide credit support (''Guarantees'') with respect to the obligations of its Subsidiaries as may be appropriate or necessary to enable its Subsidiaries to carry on in the ordinary course of their respective businesses in an aggregate principal amount not to exceed $500 million outstanding at any one time (not taking into account obligations exempt under Rule 45). Included in this amount are Guarantees entered into by AGL Resources that were previously issued in favor of its Subsidiaries. The limit on Guarantees is separate from the limit on AGL Resources' external financing. Currently, AGL Resources guarantees AGLC with respect to the obligations of SouthStar, AGL Resources' affiliated marketer. This intra-system Guarantee is expected to remain in place following the Acquisition.

G. Money Pool

AGL Resources and the Subsidiaries request authorization to establish the AGL System money pool (''Money Pool''). AGLC and Chattanooga Gas also request authorization to make unsecured short-term borrowings from the Money Pool, to contribute surplus funds to the Money Pool, and to lend and extend credit to (and acquire promissory notes from) one another through the Money Pool. AGL Resources requests authorization to contribute surplus funds and to lend and extend credit to the Money Pool.

Applicants believe that the cost of the proposed borrowings through the Money Pool will generally be more favorable to the Subsidiaries than the comparable cost of external short-term borrowings, and the yield to the Subsidiaries contributing available funds to the Money Pool will generally be higher than the typical yield on short-term investments.

Applicants propose that the Money Pool would make short-term funds available for short-term loans to the Subsidiaries from time to time from the following sources: (1) surplus funds in the treasuries of the Subsidiaries; (2) surplus funds in the treasury of AGL Resources and (3) proceeds from bank borrowings by Money Pool participants or the sale of commercial paper by AGL Resources or the Subsidiaries for loan to the Money Pool. Funds would be made available from these sources in the order as AGL Services, as administrator of the Money Pool, may determine would result in a lower cost of borrowing, consistent with the individual borrowing needs and financial standing of the companies providing funds to the pool.

Money Pool loans and borrowings would require authorization by the borrower's chief financial officer or treasurer, or by a designee. No party would be required to effect a borrowing through the Money Pool if it is determined that it could (and had authority to) effect a borrowing at lower cost directly from banks or through the sale of its own commercial paper. No loans through the Money Pool would be made to, and AGL Resources would make no borrowings through the Utility Money Pool. No subsidiary that is an EWG, FUCO or Exempt Telecommunications Company (''ETC'') under section 34 of the Act, would borrow from the Money Pool. Applicants request that the Commission reserve jurisdiction over the participation in the Money Pool of any Subsidiary formed or acquired after the issuance of an order in this file until Applicants have completed the record with respect to each company.

AGL Services would administer the operation of the Money Pool on an ''at cost'' basis, including record keeping and coordination of loans.

H. Changes in Capital Stock

Applicants state that the portion of an individual Subsidiary's aggregate financing to be effected through the sale of stock to AGL Resources or other immediate parent company during the Authorization Period under Rule 52 and/or an order issued in this file is unknown at this time. Applicants request authority to change the terms of any wholly owned Subsidiary's authorized capital stock capitalization by an amount deemed appropriate by AGL Resources or other intermediate parent company.

The requested authorization is limited to AGL Resources' wholly owned Subsidiaries and would not affect the aggregate limits or other conditions contained in the application. A Subsidiary would be able to change the par value, or change between par value and no-par stock, without additional Commission approval. This action by a Utility Subsidiary would be subject to and would only be taken upon the receipt of any necessary approvals by the state commission in the state or states where the utility subsidiary is incorporated and doing business. In addition, each of the utility subsidiaries would maintain, during the Authorization Period, a common equity capitalization of at least 30%.

I. Payment of Dividends

As a result of the application of the purchase method of accounting to the Acquisition, the current retained earnings of VNG will be eliminated. In addition, the Acquisition will give rise to a substantial level of goodwill, the difference between the aggregate values allocated to all identifiable tangible and intangible (non-goodwill) assets on the one hand, and the total consideration to be paid for VNG and the fair value of the liabilities assumed, on the other. VNG requests authorization to pay dividends out of additional paid-in-capital up to the amount of its retained earnings immediately prior to the Acquisition and out of earnings before the amortization of goodwill.

J. Financing Entities

AGL Resources and the Subsidiaries seek authorization to organize new corporations, trusts, partnerships or other entities that will facilitate financings by issuing income preferred securities or other securities to third parties. To the extent not exempt under Rule 52, the financing entities also request authorization to issue these securities to third parties. In connection with this method of financing, AGL Resources and the Subsidiaries request authority to: (1) Issue debentures or other evidences of indebtedness to a financing entity in return for the proceeds of the financing; (2) acquire voting interests or equity securities issued by the financing entity to establish ownership of the financing entity (the equity portion of the entity generally being created through a capital contribution or the purchase of equity securities, ranging from one to three percent of the capitalization of the financing entity); and (3) guarantee a financing entity's obligations in connection with a financing transaction. AGL Resources and the Subsidiaries also request authorization to enter into expense agreements with financing entities to pay their expenses. Any amounts issued by a financing entity to a third party under this authorization would be included in the overall external financing limitation authorized for the immediate parent of the financing entity. The underlying intra-system mirror debt and parent guarantee would not be included.

K. Tax Allocation Agreement

Applicants request Commission approval of the agreement between AGL Resources and its Subsidiaries to file a consolidated tax return (''Tax Allocation Agreement''). The Tax Allocation Agreement provides for the retention by AGL Resources of certain payments for tax losses that it has incurred, rather than the allocation of these losses to the Subsidiaries without payment as would otherwise be required by Rule 45(c)(5). AGL Resources is seeking to retain the benefit of tax losses that have been generated by it in connection with Acquisition-related debt only. As a result of the Acquisition, ALG Resources will be creating tax benefits from the interest expense on Acquisition-related debt that is non-recourse to the Subsidiaries and unrelated to the financing of subsidiary operations.

L. Subsidiary Financings

AGLC and Chattanooga request authorization to issue short-term debt securities with maturities of less than one year. VNG currently has no public securities outstanding and all debts to companies in the Dominion Resources holding company system of utility and nonutility subsidiary companies will be repaid prior to or upon the Acquisition. VNG will rely on financings under rule

52(a) after the Acquisition. The Nonutility Subsidiaries will finance their capital needs through the issuance of securities under Rule 52(b).

M. Intra-System Service Transactions

1. *AGL Services:* AGL Resources requests authorization to form a service company, AGL Services, to provide a variety of services to the companies in the AGL System. AGL Services would offer system-wide coordination and strategy services, oversight services and other services where economies can be captured by centralization of services. Applicants anticipate that the following services would be offered by AGL Services to system companies: corporate compliance, internal auditing, strategic planning, public affairs, gas supply and capacity management (regulated subsidiaries), legal services, marketing and sales, financial services, information system services, executive, investor relations, customer services, purchasing, risk management, telecommunications, employee services, engineering and technical services.

2. *Other Services:* The Utility Subsidiaries will need authorization to provide services to affiliated and unaffiliated gas marketing companies and charge fees under approved tariffs that may not be ''at cost.''

N. Nonutility Reorganizations

1. *Intermediate Subsidiaries:* AGL Resources requests authorization to acquire, directly or indirectly, through purchase of capital shares, partnership interests, member interests in limited liability companies, trust certificates or other forms of equity interests, the equity securities of one or more intermediate subsidiaries (''Intermediate Subsidiaries'') organized exclusively for the purpose of acquiring, financing, and holding the securities of one or more existing or future nonutility subsidiaries. Intermediate Subsidiaries may also provide management, administrative, project development, and operating services to these entities. These subsidiaries would engage only in businesses to the extent the AGL System is authorized, whether by statute, rule, regulation or order, to engage in those businesses. AGL Resources does not seek authorization to acquire an interest in any nonassociate company as part of the authority requested in this application and states that the reorganization will not result in the entry by the AGL System into a new, unauthorized line of business.

The Intermediate Subsidiaries would be organized for the purpose of acquiring, holding and/or financing the acquisition of the securities of or other interest in one or more EWGs, FUCOs, Rule 58 Subsidiaries, ETCs or other non-exempt nonutility subsidiaries. Intermediate Subsidiaries may also engage in development activities (''Development Activities'') and administrative activities (''Administrative Activities'') relating to the permitted businesses of the nonutility subsidiaries.

Intermediate Subsidiaries request authority to expend up to $300 million during the Authorization Period on all Development Activities. Administrative Activities will include ongoing personnel, accounting, engineering, legal, financial, and other support activities necessary to manage AGL Resources' investments in Nonutility Subsidiaries.

An Intermediate Subsidiary may be organized to facilitate the making of bids or proposals to develop or acquire an interest in any EWG, FUCO, Rule 58 Subsidiary, ETC or other non-exempt nonutility subsidiary; to facilitate closing on the purchase or financing of an acquired company after the award of a bid proposal; to effect an adjustment in the respective ownership interests in the business held by AGL Resources and non affiliated investors; to facilitate the sale of ownership interests in one or more acquired nonutility companies; to comply with applicable laws of foreign jurisdictions limiting or otherwise relating to the ownership of domestic companies by foreign nationals; as a part of tax planning in order to limit AGL Resources' exposure to U.S. and foreign taxes; as a means to further insulate AGL Resources and the Utility Subsidiaries from operational or other business risks that may be associated with investments in nonutility companies or for other lawful business purposes.

2. *Intermediate Holding Company Guarantees:* To the extent that AGL Resources provides funds or guarantees directly or indirectly to an Intermediate Subsidiary that are used for the purpose of making an investment in any EWG or FUCO or a rule 58 Subsidiary, the amount of these funds or guarantees will be included in AGL Resources' ''aggregate investment'' in those entities, as calculated in accordance with Rule 53 or Rule 58, as applicable.

For the Commission, by the Division of Investment Management, under delegated authority.

Margaret H. McFarland,

Deputy Secretary.

[FR Doc. 00–21877 Filed 8–25–00; 8:45 am]

BILLING CODE 8010–01–M

SECURITIES AND EXCHANGE COMMISSION

[Rel. No. IC–24603; File No. 812–12118]

The Equitable Life Assurance Society of the United States, et al.

August 21, 2000.

AGENCY: The Securities and Exchange Commission (''Commission'').

ACTION: Notice of application for an order pursuant to section 26(b) of the Investment Company Act of 1940 (''1940 Act'') approving certain substitutions of securities, and pursuant to Section 17(b) of the 1940 Act exempting related transaction from section 17(a) of the 1940 Act.

Summary of Application: Applicants request an order to permit certain registered unit investment trusts to substitute securities issued by the EQ Advisors Trust's (''EQ Trust'') Alliance Equity Index Portfolio (''Alliance Portfolio'') for securities issued by the EQ Trust's BT Equity 500 Index Portfolio (''BT Portfolio''), currently held by those unit investment trusts, and to permit certain in-kind redemptions of portfolio securities in connection with the substitution (''In-Kind Transaction'') and the consolidation of certain subaccounts by certain of those unit investment trust following the substitution.

Applicants: The Equitable Life Assurance Society of the United States (''Equitable''), Separate Account No. 301 of Equitable (''SA 301''), Separate Account No. 45 of Equitable (''SA 45''), Separate Account No. 49 of Equitable (''SA 49''), and Separate Account FP of Equitable (''SA FP,'' and together with SA 301, SA 45, and SA 49, the ''Equitable Accounts'').

Filing Date: The application was filed on May 25, 2000. Applicants represent that they will file an amended application during the notice period to conform to the representations set forth herein.

Hearing Or Notification Of Hearing: An order granting the application will be issued unless the Commission orders a hearing. Interested persons may request a hearing by writing to the Secretary of the Commission and serving Applicants with a copy of the request, personally or by mail. Hearing requests should be received by the Commission by 5:30 p.m. on September 15, 2000, and should be accompanied by proof of service on Applicants, in the form of an affidavit or, for lawyers, a certificate of service. Hearing requests should state the nature of the writer's interest, the reason for the request, and

the issues contested. Persons may request notification of a hearing by writing to the Secretary of the Commission.

ADDRESSES: Secretary, Securities and Exchange Commission, 450 Fifth Street, N.W., Washington, D.C. 20549–0609. Applicants: c/o Peter D. Noris, Executive Vice President and Chief Investment Officer, The Equitable Life Assurance Society of the United States, 1290 Avenue of the Americas, New York, New York 10104.

FOR FURTHER INFORMATION CONTACT: Jane G. Heinrichs, Senior Counsel, at (202) 942–0696, or Keith E. Carpenter, Branch Chief, at (202) 942–0679, Office of Insurance Products, Division of Investment Management.

SUPPLEMENTARY INFORMATION: The following is a summary of the application; the complete application may be obtained for a fee from the Public Reference Branch of the Commission, 450 5th Street, N.W., Washington, D.C. 20549–0102 (tel. (202) 942–8090).

Applicants' Representations

1. Equitable is a New York stock life insurance company authorized to sell life insurance and annuities in all fifty states, the District of Columbia, Puerto Rico, and the Virgin Islands. Equitable is the depositor and sponsor of SA 301, SA 45, SA 49 and SA FP, each a separate investment account established under New York law.

2. Equitable is a wholly owned subsidiary of AXA Financial, Inc., a member of the global AXA Group, which is a holding company for an international group of insurance and related financial services companies.

3. Each of the Equitable Accounts is registered with the Commission under the 1940 Act as a unit investment trust. The assets of the Equitable Accounts support certain variable annuity contracts and variable life insurance policies (collectively, ''Contracts''). The variable annuity contracts issued by the Applicant include flexible premium deferred variable annuity contracts and single premium immediate variable annuity contacts. Some of the variable annuity contracts are issued as group contracts, while the remaining annuity contracts are issued to or on behalf of individuals. The variable life insurance policies issued by the Applicants include individual flexible premium, individual modified single premium and second to die variable life insurance contracts.

4. EQ Advisors Trust (''EQ Trust'') is organized as a Delaware business trust. It is registered as an open-end management investment company under the 1940 Act and its shares are registered under the 1933 Act on Form N–1A. EQ Trust is a series investment company, as defined by Rule 18f–2 under the 1940 Act, and currently offers 41 separate portfolios of shares. EQ Trust sells shares to the Equitable Accounts in connection with the Contracts. EQ Trust currently offers two classes of shares, Class IA and Class IB shares, which differ only in that Class IB shares are subject to a distribution plan adopted and administered pursuant to Rule 12b–1 under the 1940 Act.

5. Equitable currently serves as investment manager (''Manager'') of each of the 41 current portfolios of EQ Trust pursuant to an investment management agreement between EQ Trust and Equitable. Pursuant to the investment management agreement, the Manager is responsible for the overall supervisory responsibility for the general management of EQ Trust, including selecting the investment advisers for each of EQ Trust's portfolios. Alliance Capital Management L.P. (''Alliance'') is the adviser for the Alliance Portfolio and Bankers Trust Company (''BT'') is the adviser for the BT Portfolio.

6. EQ Trust has received an exemptive order from the Commission (''Multi-Manager Order'') that permits the Manager, or any entity controlling, controlled by, or under common control (within the meaning of section 2(a)(9) of the 1940 Act) with the Manager, subject to certain conditions, including approval of the Board of Trustees of EQ Trust, and without the approval of shareholders to: (i) Select a new or additional investment advisers for each Portfolio; (ii) enter into new Advisory Agreements and/or materially modify the terms of any existing Advisory Agreement; [1] (iii) terminate any existing Adviser and replace the Adviser; and (iv) continue the employment of an existing Adviser on the same contract terms where the Advisory Agreement has been assigned because of a change of control of the Adviser,[2] In such circumstances, Contract owners would receive notice of any such action, including all information concerning any new Adviser or Advisory Agreement that normally is provided in proxy materials.

7. Applicants assert that each of the Contracts expressly reserve Equitable's right, subject to compliance with applicable law, to substitute shares of another open-end management investment company for shares of an open-end management investment company held by a sub-account. In addition, the prospectuses describing the Contracts contain appropriate disclosure of this right.

8. Applicants propose to substitute Class IB Shares of the Alliance Portfolio for Class IB Shares of the BT Portfolio (''Substitution'').[3] The Applicants represent that the Substitution is part of a continuing and overall business plan by Equitable to make the Contracts more competitive and attractive to potential customers and Contract owners. The Applicants assert that the Substitution will benefit Contract owners by: (a) Facilitating Contract owner understanding of the underlying investment options for the Contracts and reducing the potential for Contract owners to be confused by two separate underlying investment options (*i.e.,* the Alliance Portfolio and the BT Portfolio), both of which attempt to replicate the performance of the Standard & Poor's 500 Composite Stock Price Index (''S&P 500'') and have substantially similar investment strategies and anticipated risks; (b) consolidating the assets attributable to the Alliance Portfolio and the BT Portfolio in a single portfolio, thereby eliminating duplicative Portfolios, which may make the Contracts more efficient to administer and may provide economies of scale that could benefit Contract owners; and (c) providing Contract owners who have their Contract values currently allocated to the BT Portfolio with a Portfolio that has the same investment management fees and expenses as the BT Portfolio but lower total expense ratios than the BT Portfolio.

9. As demonstrated in the chart below, the Applicants represent that the Alliance Portfolio has, and will continue to have, investment objectives, investment strategies and anticipated risk that are substantially similar in all material respects to those of the BT Portfolio:

[1] The Manager will not enter into an Advisory Agreement with an Adviser that is an ''affiliated person'' (as defined in section 2(a)(3) of the 1940 Act) of the Portfolio or the Manager, other than by reason of serving as an Adviser to a Portfolio, without the Advisory Agreement, including the compensation to be paid thereunder, being approved by the shareholders of the applicable Portfolio (or, if the Portfolio serves as a funding medium for any sub-account of a registered separate account, then pursuant to voting instructions by the unit holders of the sub-account).

[2] See EQ Advisors Trust and EQ Financial Consultants, Inc., Investment Company Act Rel. Nos. 23128 (April 24, 1998) (order) and 23093 (March 30, 1998) (notice). An investment company that has received such an order is commonly referred to as a ''multi-manager'' investment company.

[3] The BT Portfolio does not have any Class IA shares issued and outstanding.

Current portfolio	Investment objective	New portfolio	Investment objective
BT Portfolio	Seeks to replicate as closely as possible (before deduction of Portfolio expenses) the total return of the S&P 500 Index	Alliance Portfolio	Seeks a total return before expenses that approximates the total return performance of the S&P 500 Index, including reinvestment of dividends, at a risk level consistent with that of the S&P 500 Index.

10. As demonstration in the chart below, it is also expected that: (a) The investment management fees (i.e., the total management fees paid to the Manager[4] with respect to the Alliance Portfolio will be the same as the investment management fees with respect to the BT Portfolio; and (b) the total expense ratio of the Alliance Portfolio will be less than the total expense ratio of the BT Portfolio. The chart below shows the estimated management fees and total expense of Class IB shares of the BT Portfolio and the Alliance Portfolio as if the current Management agreement has been in effect for the year ended December 31, 1999.[5]

Portfolio	Advisory fees (as percentage of average daily net assets)	12b–1 fees (percent)	Total expenses (as percentage of average daily net assets)
Alliance Portfolio	0.25	0.25%	0.54
BT Portfolio[6]	0.25	0.25%	0.68

11. Applicants state that they have provided their respective Contract owners and participants with disclosure of the Substitution through prospectuses or prospectus supplements, as appropriate. Such disclosure described the alliance Portfolio and the BT Portfolio and disclosed the impact of the Substitution on fees and expenses at the underlying fund level. If the Commission approves the application, existing Contract owners and participants will be sent, on or about the date of approval, a supplement to the relevant Contract prospectus that discloses to such Contract owners and participants that the application has been approved. Together with this disclosure, such existing Contract owners and participants who have not previously received a prospectus for the Alliance Portfolio will be send a prospectus and/or supplement containing disclosure that the Commission has issued an order approving the Substitution, as well as a prospectus for the Alliance Portfolio. The Contract prospectus and/or supplement and the prospectus for the EQ Trust, including the Alliance Portfolio, will be delivered to purchasers of new Contracts in accordance with all applicable legal requirements.

12. Applicants also state that Contract owners and participants will be sent a notice of the Substitution. All such notices will be mailed to affected Contract owners and participants before the date the Substitution is effected (''Substitution Date''). The notice will inform Contract owners and participants that the Substitution will be effected on the Substitution Date and that they may transfer assets from the BT Portfolio to another investment option available under their Contract without the imposition of any fee, charge, or other penalty that might otherwise be imposed through a date at least thirty (30) days following the Substitution Date. Confirmation of the Substitution will be mailed to affected Contract owners and participants within five (5) days after the Substitution Date.

13. Applicants asset that the significant terms of the Substitution described above include:

a. The Alliance Portfolio will have investment objectives, investment strategies, and anticipated risks that are substantially similar in all material respects, to those of the BT Portfolio.

b. The fees and expenses of the Alliance Portfolio will be the same as or less than those of the BT Portfolio, assuming that the assets of the Alliance Portfolio do not decrease significantly from its present asset levels.

c. Contract owners and participants may transfer assets from the Alliance Portfolio or the BT Portfolio to another investment option available under their Contract without the imposition of any fee, charge, or other penalty that might otherwise be imposed from the date of the initial notice through a date at least thirty (30) days following the Substitution Date.

d. The Substitution will be effected at the net asset value of the respective shares of the BT Portfolio and the Alliance Portfolio in conformity with Section 22(c) of the 1940 Act and Rule 22c–1 thereunder, without the imposition of any transfer or similar charge by Applicants, and with no change in the amount of any Contract owner's or participant's Contract value or in the dollar value of his or her investment in such Contract.

e. Contract owners and participants will not incur any fees or charges as a result of the Substitution, nor will their rights or Equitable's obligations under the Contracts be altered in any way. Equitable will bear all expenses incurred in connection with the Substitution and related filings and notices, including legal, accounting and other fees and expenses. The Substitution will not cause the Contract fees and charges currently being paid by existing Contract owners to be greater after the Substitution than before the Substitution.

f. The Substitution will be effected by redeeming the shares of the BT Portfolio in-kind. Those assets will then be contributed in-kind to the Alliance Portfolio to purchase its shares. Redemptions in-kind and contributions in-kind will be done in a manner consistent with the investment

[4] The investment advisory fees are paid to each Adviser by the Manager from its investment management fees.

[5] Estimated management fees and total expenses of Class IB shares of the Alliance Portfolio and the BT Portfolio are presented on a *pro forma* basis and are based upon the audited financial statements of EQ Trust for the year ended December 31, 1999. The current management agreement, which became effective on May 1, 2000, reduced the management fee of the Alliance Portfolio from 0.30% of average daily net assets to 0.25% of average daily net assets. The management fee of the BT Portfolio remained unchanged.

objectives, policies and diversification requirements of the BT Portfolio and the Alliance Portfolio, and the Manager will review the In-Kind Transaction to assure that the assets are suitable for the Alliance Portfolio. Consistent with Rule 17a–7(d) under the 1940 Act, no brokerage commissions, fees (except customary transfer fees) or other remuneration will be paid in connection with the In-Kind Transaction.

g. The Substitution will not be counted as a new investment selection in determining the limit, if any, on the total number of Portfolios that Contract owners and participants can select during the life of a Contract.

h. The Substitution will not alter in any way the annuity or life benefits, tax benefits or any contractual obligations of Applicants under the Contracts.

i. Contract owners and participants may withdraw amounts under the Contracts or terminate their interest in a Contract, under the conditions that currently exist, including payment of any applicable withdrawal or surrender charge.

j. Contract owners and participants affected by the Substitution will be sent written confirmation of the Substitution that identify the substitutions made on behalf of that Contract owner or participant within five (5) days following the Substitution Date.

14. Applicants state that they will not complete the Substitution unless all of the following conditions are met:

a. The Commission will have issued an order approving the Substitution under Section 26(b) of the 1940 Act.

b. The Commission will have issued an order exempting the in-kind transactions from the provisions of section 17(a) of the 1940 Act, to the extent necessary to carry out the Substitution as described herein.

c. The amendments to the registration statements for the Contracts describing the substitution shall have become effective.

d. Each Contract owner or participant will have been mailed initial disclosure of the Substitution and will have been mailed a prospectus for the Alliance Portfolio and an amended and/or supplemental prospectus for the applicable Contracts before the Substitution Date. In addition, in conjunction with this mailing, each Contract owner or participant will have been sent a notice that describes the terms of the Substitution and Contract owners' and participants' rights in connection with them.

e. Applicants will have satisfied themselves, based on advice of counsel familiar with insurance laws, that the Contracts allow the substitution of portfolios as described therein under applicable insurance laws and under the various Contracts.

f. Applicants will have complied with any regulatory requirements they believe are necessary to complete the transactions in each jurisdiction where the Contracts are qualified for sale.

Applicants' Legal Analysis and Conditions

1. Section 26(b) of the 1940 Act provides that it shall be unlawful for any depositor or trustee of a registered unit investment trust holding the security of a single issuer to substitute another security for such security unless the Commission shall have approved such substitution; and the Commission shall issue an order approving such substitution if the evidence establishes that it is consistent with the protection of investors and the purposes fairly intended by the policies and provisions of the 1940 Act.

2. Section 26(b) protects the expectation of investors that the unit investment trust will accumulate shares of a particular issuer and is intended to insure that unnecessary or burdensome sales loads, additional reinvestment costs or other charges will not be incurred due to unapproved substitutions of securities.

3. Applicants submit that the Contracts expressly reserve to the Applicants the right, subject to compliance with applicable law, to substitute shares of Alliance Portfolio for shares of the BT Portfolio held by the Equitable Accounts. The Applicants assert that they have reserved this right of substitution both to protect themselves and their Contract owners in situations where either might be harmed or disadvantaged by events affecting the issuer of the securities held by an Equitable Account and to preserve the opportunity to replace such shares in situations where a substitution could benefit themselves and their Contract owners and participants.

4. The applicants submit that the proposed substitutions meet the standards that the Commission and its staff generally have applied to other substitutions that have been approved. In addition, the Applicants contend that the Substitution is not the type of substitution that section 26(b) was designed to prevent. Unlike traditional unit investment trusts, the Contracts provide each Contract owner with the right to exercise his own judgment and transfer Contract values into any other available variable and/or fixed investment option. Additionally, the Substitution will not, in any manner, reduce the nature or quality of the available investment options. Contract owners who do not want their assets allocated to the Alliance Portfolio would be able to transfer assets to any one of the other sub accounts available under their Contract without charge until thirty days after the Substitution Date.

5. Applicants assert that the Substitution will not result in any change in the amount of any Contract owner's or participant's Contract value or in the dollar value of his or her investment in such Contract, or the annuity or life benefits, tax benefits or any contractual obligation of the Applicants under the Contracts. Contract owners will not incur any fees, expenses or charges as a result of the proposed transactions. Furthermore, the proposed transactions will not result in any change to the Contract fees and charges currently being paid by existing Contract owners. The Applicants assert, therefore, that the Substitution will not result in the type of costly forced redemption that Section 26(b) was designed to prevent.

6. Applicants assert that the Substitution will benefit Contract owners by: (1) Facilitating Contract owner understanding of the underlying investment options for the Contracts and reducing the potential for Contract owners to be confused by two separate underlying investment options (i.e., the Alliance Portfolio and the BT Portfolio), both of which attempt to replicate the performance of the S&P 500 and have substantially similar investment strategies and anticipated risks; (2) consolidating the assets attributable to the Alliance Portfolio and the BT Portfolio in a single portfolio, thereby eliminating duplicative Portfolios, which may make the Contracts more efficient to administer and may provide economies of scale that could benefit Contract owners; and (3) providing Contract owners who have their Contract values currently allocated to the BT Portfolio with a Portfolio that has the same investment management fees and expenses as the BT Portfolio but lower total expense ratios than the BT Portfolio.

7. Section 17(a)(1) of the 1940 Act prohibits any affiliated person or an affiliate of an affiliated person, of a registered investment company, from selling any security or other property to such registered investment company. Section 17(a)(2) of the 1940 Act prohibits such affiliated persons from purchasing any security or other property from such registered investment company.

8. Section 17(b) of the 1940 Act authorizes the Commission to issue an

order exempting a transaction from section 17(a) if: (a) the terms of the proposed transaction are fair and reasonable and do not involve overreaching on the part of any person concerned; (b) the proposed transaction is consistent with the policy of each registered investment company concerned; and (c) the proposed transaction is consistent with the general purposes of the 1940 Act.

9. Applicants request an order pursuant to section 17(b) of the 1940 Act exempting them from the provisions of Section 17(a) to the extent necessary to permit them to: (a) carry out the In-Kind Transaction; and (b) consolidate each subaccount of SA FP and SA 45 currently investing in the BT Portfolio with the corresponding subaccount of SA FP and SA 45, respectively, currently investing in the Alliance Portfolio (collectively, ''Consolidations'').

10. Applicants assert that the In-Kind Transaction, including the consideration to be paid and received, is reasonable and fair and does not involve overreaching on the part of any person concerned. The In-Kind Transaction will be effected at the respective net asset values of the BT Portfolio and the Alliance Portfolio, as determined in accordance with the procedures disclosed in the registration statement of EQ Trust and as required by Rule 22c-1 under the 1940 Act. The In-Kind Transaction will not change the dollar value of any participant's or Contract owner's investment in any of the Equitable Accounts, the value of any Contract, the accumulation value or other value credited to any Contract, or the death benefit payable under any Contract. After the proposed In-Kind Transaction, the value of an Equitable Account's investment in the Alliance Portfolio will equal the value of its investment in the BT Portfolio before the In-Kind Transaction. Applicants also state that the transactions will conform substantially to the conditions of Rule 17a–7. To the extent that the In-Kind Transaction does not comply fully with the provisions of paragraphs (a) and (b) Rule 17a–7, Applicants assert that the terms of the In-Kind Transaction provide the same degree of protection to the participating companies and their shareholders as if the In-Kind Transaction satisfied all of the conditions enumerated in Rule 17a–7. Applicants also assert that the proposed In-Kind Transactions by Applicants do not involve overreaching on the part of any person concerned. Furthermore, Applicants represents that the proposed substitutions will be consistent with the policies of the BT Portfolio and Alliance Portfolio, as recited in EQ Trust's current registration statement.

11. Applicants assert that the In-Kind Transaction is consistent with the general purposes of the 1940 Act and that the In-Kind Transaction does not present any of the conditions or abuses that the 1940 Act was designed to prevent.

12. Applicants assert that the terms of the Consolidations are reasonable and fair and do not involve overreaching. Combining the assets of the relevant subaccounts would have no impact on the Alliance Portfolio. The terms and conditions of the Consolidations would not affect the contract values of Contract owners and participants. The transfers would be made at the relative values of each subaccount. The aggregate Contract value of each affected Contract owner would be the same after the Consolidations as before the Consolidations. From the Contract owner's perspective, no dilution of, or increase in, their Contract value or annuity value would occur as a result of a Consolidation. The transfer would not result in any change in charges, costs, fees or expenses borne by Contract owners or participants. No charge would be assessed on the Consolidations.

13. The purpose of each Consolidation is to consolidate into a single subaccount two basically identical separate subaccounts that fund the Contracts, and, after the Substitution, will invest in the same underlying portfolio. This aggregation would allow for administrative efficiencies and cost savings on Equitable's part because Equitable would save the administrative, compliance, accounting, and auditing expense associated with separate subaccounts.

14. Applicants assert that the Consolidations are consistent with the general purposes of the 1940 Act and that the Consolidations do not present any of the conditions or abuses that the 1940 Act was designed to prevent.

Conclusion

Applicants assert that, for the reasons summarized above, the Substitution is consistent with the protection of investors and the purposes fairly intended by the policy and provisions of the 1940 Act.

For the Commission, by the Division of Investment Management, pursuant to delegated authority.

Margaret H. McFarland,

Deputy Secretary.

[FR Doc. 00–21843 Filed 8–25–00; 8:45 am]

BILLING CODE 8010–01–M

SECURITIES AND EXCHANGE COMMISSION

Sunshine Act Meeting

Notice is hereby given, pursuant to the provisions of the Government in the Sunshine Act, Pub. L. 94–409, that the Securities and Exchange Commission will hold the following meetings during the week of August 28, 2000.

A closed meeting will be held on Thursday, August 31, 2000 at 11:00 a.m.

Commissioners, Counsel to the Commissioners, the Secretary to the Commission, and recording secretaries will attend the closed meeting. Certain staff members who have an interest in the matters may also be present.

The General Counsel of the Commission, or his designee, has certified that, in his opinion, one or more of the exemptions set forth in 5 U.S.C. 552b(c)(4), (8), (9)(A) and (10) and 17 CFR 200.402(a)(4), (8), (9)(A) and (10), permit consideration for the scheduled matters at the closed meeting.

The subject matters of the closed meeting scheduled Thursday, August 31, 2000 will be:

- Institution and settlement of injunctive actions; and
- Institution and settlement of administrative proceedings of an enforcement nature

At times, changes in Commission priorities require alterations in the scheduling of meeting items. For further information and to ascertain what, if any, matters have been added, deleted or postponed, please contact:

The Office of the Secretary at (202) 942–7070.

Dated: August 23, 2000.

Margaret H. McFarland,

Deputy Secretary.

[FR Doc. 00–22015 Filed 8–24–00; 8:45 am]

BILLING CODE 8010–01–M

SECURITIES AND EXCHANGE COMMISSION

[Release No. 34–43168; File No. SR–BSE–99–07]

Self-Regulatory Organizations; Order Approving Proposed Rule Change by the Boston Stock Exchange, Inc. Amending its Minor Rule Violation Plan

August 17, 2000.

I. Introduction

On June 1, 1999, the Boston Stock Exchange, Inc. (''BSE'' or ''Exchange'') submitted to the Securities and Exchange Commission (''Commission''), pursuant to section 19(b)(1) of the Securities Exchange Act of 1934 (''Act'') [1] and Rule 19b–4 [2] thereunder, a proposed rule change. In its proposal, the BSE seeks to amend its Minor Rule Violation Plan (''Plan'') and to incorporate this plan into the Boston Stock Exchange Guide, which is its rulebook. The proposed rule change was published for comment in the **Federal Register** on June 23, 2000.[3] The Commission received no comments on the proposal and this order approves the filing as amended.[4]

II. Description of the Proposal

The BSE proposes to amend the Exchange's Plan to include the failure to attend Market Performance Committee BEACON training sessions in the Plan and to change the prohibition titled ''Violation of the Exchange Smoking Policy'' to prohibit all forms of tobacco use on the equity trading floor. The Plan provides an alternative method for the Exchange to use to discipline members who commit minor rule violations. The proposed addition to the Plan will enable the Exchange to ensure that all floor members are fully trained on the BEACON system following enhancements for the handling of orders or the release of new versions of BEACON software. The Exchange believes that this will ensure that all customer orders are accorded the same professional attention by all specialists. The Exchange proposes a written warning for an initial offense, a $50 fine for the second offense, and a $100 fine for subsequent offenses.

In addition, the Exchange proposes to prohibit all forms of tobacco use on the Equity Trading Floor. Currently, only smoking is prohibited. The proposal also includes a fine for failing to designate an order ''PPS.'' [5] This abbreviation indicates that the order was executed during the Post Primary Session, which is from 4:00 pm to 4:15 pm. The Exchange also proposes to incorporate the BSE's Plan into the Boston Stock Exchange Guide, which is its rulebook.

III. Discussion

The Commission finds that the BSE proposal to include in its Plan failure to attend BEACON training sessions, failure to designate an order PPS, and tobacco use on the equity trading floor is consistent with the requirements of the Act and the rules and regulations thereunder applicable to a national securities exchange, and, in particular, the requirements of sections 6(b)(1) and (6) of the Act.[6] The Commission believes that the proposal is a reasonable means by which the Exchange may ensure the orderly conduct of business on its floor and in its administrative areas. Because the proposal defines the scope of the prohibited conduct, provides notice to members and staff, and its tailored to serve a legitimate Exchange regulatory interest, the proposal establishes a fair and reasonable policy for the regulation of BEACON training, order designation, and tobacco use at the BSE.

For the reasons set forth below, the Commission also finds that the BSE proposal to amend its Plan is consistent with the Act. In adopting Rule 19d–1, the Commission noted that the Rule was an attempt to balance the informational needs of the Commission against the reporting burdens of the SROs.[7] In promulgating paragraph (c) of the Rule, the Commission was attempting further to reduce those reporting burdens by permitting, where immediate reporting was unnecessary, quarterly reporting of minor rule violations. The Rule is intended to be limited to violations of rules which can be adjudicated quickly and objectively.

The Commission believes that the BSE's training, order designation, and tobacco use policies meet this criterion and should be added to the list of violations. In particular, the Commission believes that the BSE proposal regarding violations of the training, order designation, and tobacco use policies are easily determined and amendable to quick, objective determinations of compliance. Efficient and equitable enforcement of the policy should not entail the complicate factual and interpretive inquires associated with more sophisticated Exchange disciplinary actions.

Further, the proposal is consistent with the section 6(b)(6) requirement that the rules of an exchange provides that its members and persons associated with its members be appropriately disciplined for violations of rules of the exchange. In this regard, the proposal will provide an efficient procedure for appropriate disciplining of members in those instances when a rule or policy violation is either technical and objective or minor in nature. Moreover, because the Plan provides procedural rights to the person fined and permits a discipline person to request a full hearing on the matter, the proposal provides a fair procedure for the disciplining of members and persons asssociated with members which is consistent with the requirements of sections 6(b)(7) and 6(d)(1) of the Act.[8]

The Commission also believes that the proposal is consistent with section 6(b)(6) of the Act in that it incorporates the Plan into the Exchange's rulebook. Specifically, the inclusion of the Plan in the rulebook should help increase member awareness of the prohibitions contained in the Plan and provide the BSE another method for enforcing its rules.

IV. Conclusion

It Is Therefore Ordered, pursuant to section 19(b)(2) of the Act [9] and Rule 19d–1(c)(2) under the Act, [10] that the proposed rule change (SR–BSE–99–07) is approved.

For the Commission, by the Division of Market Regulation, pursuant to delegated authority.[11]

Margaret H. McFarland,

Deputy Secretary.

[FR Doc. 00–21844 Filed 8–25–00; 8:45 am]

BILLING CODE 8010–01–M

[1] 15 U.S.C. 78s(b)(1).

[2] 17 CFR 240.19b–4.

[3] *See* Securities Exchange Act Release No. (June 16, 2000), 65 FR 39215.

[4] The BSE submitted two amendments to the proposed rule change, Amendment No. 1 on March 24, 2000, which was published in the notice, and Amendment No. 2 on May 30, 2000. *See* footnote 4.

[5] The Commission notes that this proposed violation was included in Amendment No. 2 to the filing, but was not described in the Purpose section of the filing. Specifically, this proposed violation was included in Exhibit 2 of Amendment No. 2, which listed the existing and proposed Minor Rule Violations. The Commission deems this a technical amendment to the proposed rule change, which is not subject to notice and comment. As mentioned in the notice of the filing, copies of the filing and all subsequent amendments are available in the Commission's Public Reference Room and at the BSE.

[6] 15 U.S.C. 78f(b)(1) and (6).

[7] *See* Securities Exchange Act Release No. 13726 (July 8, 1977), 42 FR 36411 (July 14, 1977).

[8] 15 U.S.C. 78f(b)(7) and (d)(1).

[9] 15 U.S.C. 78s(b)(2).

[10] 17 CFR 240.19b–4.

[11] 17 CFR 200.30–3(a)(12).

DEPARTMENT OF TRANSPORTATION

Office of the Secretary

[Docket No. OST–95–246]

North American Free Trade Agreement's Land Transportation Standards Subcommittee and Transportation Consultative Group: Annual Plenary Session

AGENCY: Office of the Secretary, DOT.

ACTION: Notice.

SUMMARY: This notice (1) announces the seventh joint annual plenary session of the North American Free Trade Agreement's (NAFTA) Land Transportation Standards Subcommittee (LTSS) and the Transportation Consultative Group (TCG) and other related meetings; and (2) invites representatives of non-governmental entities with an interest in land transportation issues to participate in a listening session immediately preceding the plenary meeting and to attend a briefing at a later date. Only U.S., Canadian, and Mexican government officials may attend the plenary and working group meetings.

Background

The Land Transportation Standards Subcommittee (LTSS) was established by the North American Free Trade Agreement's (NAFTA) Committee on Standards-Related Measures to examine the land transportation regulatory regimes in the United States, Canada, and Mexico, and to seek to make certain standards more compatible. The Transportation Consultative Group (TCG) was formed by the three countries' departments of transportation to address non-standards-related issues that affect cross-border movements among the countries, but that are not included in the NAFTA's LTSS work program (Annex 913.5–1).

Meetings and Deadlines

The seventh joint annual LTSS/TCG plenary session will be held from October 23 to 27, 2000, at the Mansion Galindo Fiesta Americana Hotel, in the municipality of San Jaun del Rio, Queretaro, Mexico. The following LTSS working groups are expected to meet during the same week and at the same location: (1) Compliance and Driver and Vehicle Standards; (2) Vehicle Weights and Dimensions; (3) Hazardous Materials Transportation Standards; and (4) Traffic Control Devices. Similarly, the following TCG working groups are expected to meet: (1) Cross-Border Operations and Facilitation; (2) Rail Safety and Economic Issues; (3) Automated Data Exchange; (4) Science and Technology; and (5) Maritime and Ports Policy

Also at the same San Juan del Rio site, on October 23, 2000, a listening session will be held for representatives of the truck, bus, and rail industries, transportation labor unions, brokers and shippers, chemical manufacturers, insurance industry, public safety advocates, and others who have notified us of their interest to attend and have submitted copies of their presentations, in English and Spanish, to the address below by October 10, 2000. This is an opportunity for presenters to voice their concerns, provide technical information, and offer suggestions relevant to achieving greater standards compatibility and improving cross-border trade. While written statements may be of any length, oral presentations will be limited to10 minutes per presenter. After October 10, statements may be submitted for the record, and requests to present oral comments at the listening session will be accommodated only on a time-available basis.

Although participation in the LTSS and TCG plenary and working group meetings is limited to government officials only, representatives of non-governmental entities also are invited to take part in parallel topical discussions, visits to transport facilities, and a final briefing by the heads of the U.S., Canadian, and Mexican delegations to be held on October 27.

Hotel reservations may be arranged through Ms. Isabel Ramirez Samperio at Mexico's Secretariat of Communications and Transportation (SCT). Participants are requested to obtain a registration form from DOT staff contact, Allen Wiener at (202) 366–2892. The registration form should be sent by fax to Ms. Ramirez at 011–525–684–1252. The Mansion Galindo Fiesta Americana Hotel is located at: Carretera Amealco, KM. 5, San Juan Del Rio, Queretaro. The hotel telephone number is 427–5–0250 and the fax number is 427–5–0299.

A briefing to report on the outcome of the San Juan del Rio, Queretaro meetings will be conducted at DOT at the address below, on November 28, 2000, from 10:00 a.m. to noon. Interested parties may notify DOT of their interest to attend this briefing by calling (202) 366–2892 by November 20.

SUPPLEMENTARY INFORMATION: LTSS-related documents, including past working group reports and statements received by DOT from industry associations, transportation labor unions, public safety advocates, and others are available for review in Docket No. OST–95–246, at the address below, Room PL–401, between 9:00 a.m. and 5:00 p.m., e.s.t., Monday through Friday, except national holidays. The Docket, which is updated periodically, may also be accessed electronically at *http://dms.dot.gov.*

Address and Phone Numbers

Individuals and organizations interested in participating in the listening session on October 23, 2000 must send notice of their interest and copies of their presentations by October 10 to Allen Wiener, U.S. Department of Transportation, OST/X–20, Room 10300, 400 Seventh Street, SW., Washington, DC 20590. Respondents may also send information by fax at (202) 366–7417. For additional information, call (202) 366–2892.

Dated: August 21, 2000.

Bernestine Allen,

Director, Office of International Transportation and Trade.

[FR Doc. 00–21847 Filed 8–25–00; 8:45 am]

BILLING CODE 4910–62–P

DEPARTMENT OF TRANSPORTATION

Federal Highway Administration

Environmental Impact Statement; Nobles County, Minnesota

AGENCY: Federal Highway Administration (FHWA), DOT.

ACTION: Notice of Intent.

SUMMARY: The FHWA is issuing this notice to advise the public that an environmental impact statement (EIS) will be prepared for the proposed reconstruction of Trunk Highway 60 (TH 60) in Nobles County, Minnesota.

FOR FURTHER INFORMATION CONTACT: Tamara Cameron, Federal Highway Administration, Galtier Plaza, Box 75, 175 East Fifth Street, Suite 500, St. Paul, Minnesota 55101–2904, Telephone (651) 291–6121; or Lisa Bigham, Project Manager, Minnesota Department of Transportation—District 7, 501 Victory Drive, P.O. Box 4039, Mankato, Minnesota 56001, Telephone (507) 389–6877 V, (651) 296–9930 TTY.

SUPPLEMENTARY INFORMATION: The FHWA, in cooperation with the Minnesota Department of Transportation, will prepare an EIS on a proposal to improve TH 60 from approximately 2.9 kilometers (1.8 miles) south of the Minnesota/Iowa border to the junction of Interstate 90 at Worthington, Minnesota. This segment of TH 60 under study is a two-lane roadway with the exception of 1.9 kilometers (1.2 miles) of four-lane

roadway within the city of Worthington. Improvements to the corridor are considered necessary to provide for existing and projected traffic demands, correct existing operational safety problems, and improve mobility and access to the interstate and trunk highway systems.

Alternatives under consideration include:

- No Build.
- Reconstruct TH 60 as a four lane highway on the existing alignment.
- Reconstruct TH 60 as a four lane highway on the existing alignment except with an easterly Bigelow bypass.
- Reconstruct TH 60 with the existing number of lanes on the existing alignment.
- Reconstruct TH 60 with two or four lanes with a west Worthington bypass, with or without an easterly Bigelow bypass.

The ''Trunk Highway 60—Reconstruction, Scoping Document/Draft Scoping Decision Document'' was published on March 20, 2000. Copies of this document were distributed to agencies, interested persons and libraries and a 30-day comment period was provided for review of the document. A public scoping meeting was held on April 13, 2000 in Worthington, MN to provide an opportunity for all interested persons, agencies and groups to comment on the proposed action. Public and agency interest resulted in modification of the project alternatives that will be carried forward in the EIS. These alternatives are addressed in the June, 2000 Scoping Decision Document. This scoping effort resulted in a decision to prepare an EIS for this action.

Coordination has been initiated and will continue with appropriate Federal, State and local agencies and private organizations and citizens who have previously expressed or are known to have an interest in the proposed action. To ensure that the full range of issues related to this proposed action are addressed and all significant issues identified, comments and suggestions are invited from all interested parties. Comments or questions concerning this proposed action and the EIS should be directed to the FHWA at the address provided above.

(Catalog of Federal Domestic Assistance Program Number 20.205, Highway Planning and Construction. The regulations implementing Executive Order 12372 regarding intergovernmental consultation on Federal programs and activities apply to this program)

Issued on: August 17, 2000.

Stanley M. Graczyk,

Project Development Engineer, Federal Highway Administration, St. Paul, Minnesota.

[FR Doc. 00–21837 Filed 8–25–00; 8:45 am]

BILLING CODE 4910–22–M

DEPARTMENT OF TRANSPORTATION

Maritime Administration

[Docket No. MARAD–2000–7841]

Marine Transport Corporation; Notice of Application for Written Permission for Temporary Transfer to the Coastwise Trade

AGENCY: Maritime Administration, Transportation.

ACTION: Notice of application.

SUMMARY: Pursuant to section 506 of the Merchant Marine Act, 1936, as amended (Act), Marine Transport Corporation (MTC), by letter dated August 2, 2000, requests approval of the temporary transfer of the integrated tug barge, *SMT Chemical Trader,* Official Numbers 631332 and 631333, to the coastwise trade for a period of approximately four months beginning between November 1, 2000, and November 18, 2000. (MTC advises that because *SMT Chemical Trader* will be undergoing a required drydocking in early November, it is impossible at this time to know precisely when it will leave the yard and when the approximately four-month waiver period, if granted, will begin.)

DATES: You should submit your comments early enough to ensure that Docket Management receives them not later than close of business (5 p.m. edt) September 6, 2000.

ADDRESSES: Your comments should refer to docket number MARAD 2000–7841. You may submit your comments in writing to: Docket Clerk, U.S. DOT Dockets, Room PL–401, 400 7th St., SW, Washington, DC 20590. You may also submit them electronically via the internet at *http://dmses.dot.gov/submit.*

You may call Docket Management at (202) 366–9324 and visit the Docket Room from 10 a.m. to 5 p.m., EST., Monday through Friday, except Federal Holidays. An electronic version of this document is available on the World Wide Web at http://dms.dot.gov.

FOR FURTHER INFORMATION CONTACT: You may call Gregory V. Sparkman, Chief Division of Maritime Assistance Analysis, (202) 366–2400. You may send mail to Gregory V. Sparkman, Chief, Division of Maritime Assistance Analysis, Room 8117, Maritime Administration, 400 Seventh St., S.W., Washington, DC 20590.

SUPPLEMENTARY INFORMATION:

Comments

How Do I Prepare and Submit Comments? Your comments must be written and in English. To ensure that your comments are correctly filed in the Docket, please include the docket number of this document in your comments. We encourage you to write your primary comments in a concise fashion. However, you may attach necessary additional documents to your comments. There is no limit on the length of the attachments. Please submit two copies of your comments, including the attachments, to Docket Management at the address given above under **ADDRESSES**.

If you wish Docket Management to notify you upon its receipt of your comments, enclose a self-addressed, stamped postcard in the envelope containing your comments. Docket Management will return the postcard by mail.

How do I submit confidential business information? If you wish to submit any information under a claim of confidentiality, you should submit three copies of your complete submission, including the information you claim to be confidential business information, to the Chief Counsel, Maritime Administration, at the address given above under **FOR FURTHER INFORMATION CONTACT**. You should mark ''CONFIDENTIAL'' on each page of the original document that you would like to keep confidential. In addition, you should submit two copies, from which you have deleted the claimed confidential business information, to Docket Management at the address given above under **ADDRESSES**. When you send comments containing information claimed to be confidential business information, you should include a cover letter setting forth with specificity the basis for any such claim.

Will the agency consider late comments? We will consider all comments that Docket Management receives before the close of business on the comment closing date indicated above under **DATES**. To the extent possible, we will also consider comments that Docket Management receives after that date.

How can I read the comments submitted by other people? You may read the comments received by Docket Management at the address given above under **ADDRESSES**. The hours of the Docket Room are indicated above in the same location. You may also see the comments on the Internet. To read the

comments on the Internet, take the following steps: Go to the Docket Management System (DMS) Web page of the Department of Transportation (http://dms.dot.gov/). On that page, click on ''search.'' On the next page (http://dms.dot.gov/search/), type in the four-digit docket number shown at the beginning of this document. The docket number for this document is MARAD 2000–7841. After typing the docket number, click on ''search.'' On the next page, which contains docket summary information for the docket you selected, click on the desired comments. You may download the comments.

Application Request

Pursuant to section 506 of the Merchant Marine Act, 1936, as amended (Act), Marine Transport Corporation (MTC), by letter dated August 2, 2000, requests approval of the temporary transfer of the integrated tug barge, *SMT Chemical Trader,* Official Numbers 631332 and 631333, to the coastwise trade for a period of approximately four months beginning between November 1, 2000, and November 18, 2000. (MTC advises that because *SMT Chemical Trader* will be undergoing a required drydocking in early November, it is impossible at this time to know precisely when it will leave the yard and when the approximately four-month waiver period, if granted, will begin.)

MTC provides the following statements in its letter dated August 2, 2000, in support of its request for approval under section 506 of the Act:

MTC is requesting approval of this temporary transfer to replace *Marine Chemist,* Official No. 529399, which is currently scheduled to begin its sixth special survey and a major drydocking on or about November 15, 2000.

MTC is requesting permission for a four-month transfer of *SMT Chemical Trader* in order to provide MTC with sufficient time to determine whether: (A) it will undertake the drydock needed for *Marine Chemist* to continue to trade after November 30, 2000; or (B) *Marine Chemist* will be laid up, scrapped or retired no later than March 18, 2001, from Jones Act service (March 18, 2001, is the date upon which the Construction-Differential Subsidy contract restrictions which currently apply to *SMT Chemical Trader* expire, leaving the vessel free to participate in the Jones Act trade). In no case, however, would the two vessels operate in the Jones Act trade at the same time during the four-month waiver request period.

Marine Chemist has a deadweight capacity of approximately 35,000 tons and is capable of the simultaneous carriage of up to 36 different cargoes, some of which require coated tanks, some of which require heated tanks, some of which require stainless steel tanks and some of which require tanks capable of carrying heavy cargoes with high specific gravities. *Marine Chemist's* unique configuration is required for its performance of five long-term contracts of affreightment, some of which have terms in excess of six years. Together, these contracts utilize approximately 90 percent of the vessel's cargo carrying capacity. *Marine Chemist* also carries small parcel cargoes from time-to-time. While *SMT Chemical Trader* is not identical to Marine Chemist, MTC believes that *SMT Chemical Trader's* combination of stainless tanks, coated tanks, heavy cargo tanks and her ability to carry a variety of cargoes simultaneously make her well suited to stand in for *Marine Chemist* while MTC determines the future of that vessel.

Because *SMT Chemical Trader* will only be used during the approximately four-month transfer period to perform the contracts of affreightment and to carry those parcel cargoes currently carried by *Marine Chemist,* permitting the entry of *SMT Chemical Trader* into the Jones Act will have no competitive impact on that trade. By substituting one of its own vessels for *Marine Chemist,* MTC will be able to maintain vital long-term business relationships with customers who entered into long-term contracts with MTC with the expectation and belief that their cargoes would, throughout the term of the contracts, be carried by and under the operational supervision of MTC personnel. MTC believes that its safety and operating history is the best in the Jones Act chemical trade, and it has developed, over many years, procedures, relationships and routines specific to the cargoes carried for these customers, all of whom place the highest premium on service and safety. MTC also believes that the use of any non-MTC vessels and personnel for the performance of MTC's specific contractual obligations assigned to *Marine Chemist* would be at odds with the expectations of its customers and a source of genuine concern to them.

In response to a request by the Maritime Administration, MTC, by letter dated August 15, 2000, includes the following information:

Marine Chemist currently trades between ports in the Gulf of Mexico and the West Coast of the United States, including Portland, Oregon, San Francisco, and Los Angeles. If the four-month waiver is granted for SMT *Chemical Trader,* it will serve the same geographic area of the coast currently served by *Marine Chemist.*

This notice is published as a matter of discretion, and the fact of its publication should in no way be considered a favorable or unfavorable decision on the application, as filed, or as may be amended. MARAD will consider all comments submitted in a timely fashion, and will take such action as may be deemed appropriate.

(Catalog of Federal Domestic Assistance Program)

By Order of the Maritime Administrator.

Dated: August 23, 2000.

Joel C. Richard,

Secretary, Maritime Administration

[FR Doc. 00–21923 Filed 8–25–00; 8:45 am]

BILLING CODE 4901–81–P

DEPARTMENT OF TRANSPORTATION

National Highway Traffic Safety Administration

[Docket No. NHTSA–99–5735; Notice 2]

Decision That Nonconforming 1993–1994 Volkswagen EuroVan Multi-Purpose Passenger Vehicles Are Eligible for Importation

AGENCY: National Highway Traffic Safety Administration (NHTSA), DOT.

ACTION: Notice of decision by NHTSA that nonconforming 1993–1994 Volkswagen EuroVan multi-purpose passenger vehicles (MPVs) are eligible for importation.

SUMMARY: This notice announces the decision by NHTSA that 1993–1994 Volkswagen EuroVan MPVs not originally manufactured to comply with all applicable Federal motor vehicle safety standards are eligible for importation into the United States because they are substantially similar to vehicles originally manufactured for importation into and sale in the United States and certified by their manufacturer as complying with the safety standards (the U.S. certified version of the 1993–1994 Volkswagen EuroVan), and they are capable of being readily altered to conform to the standards.

DATES: This decision is effective August 28, 2000.

FOR FURTHER INFORMATION CONTACT: George Entwistle, Office of Vehicle Safety Compliance, NHTSA (202–366–5306).

SUPPLEMENTARY INFORMATION:

Background

Under 49 U.S.C. 30141(a)(1)(A), a motor vehicle that was not originally manufactured to conform to all applicable Federal motor vehicle safety standards shall be refused admission into the United States unless NHTSA has decided that the motor vehicle is substantially similar to a motor vehicle originally manufactured for importation into and sale in the United States, certified under 49 U.S.C. 30115, and of the same model year as the model of the motor vehicle to be compared, and is capable of being readily altered to conform to all applicable Federal motor vehicle safety standards.

Petitions for eligibility decisions may be submitted by either manufacturers or importers who have registered with NHTSA pursuant to 49 CFR part 592. As specified in 49 CFR 593.7, NHTSA publishes notice in the **Federal Register** of each petition that it receives, and affords interested persons an opportunity to comment on the petition. At the close of the comment period, NHTSA decides, on the basis of the petition and any comments that it has received, whether the vehicle is eligible for importation. The agency then publishes this decision in the **Federal Register**.

J.K. Motors of Kingsville, Maryland (''J.K.'') (Registered Importer 90–006) petitioned NHTSA to decide whether 1993–1995 Volkswagen EuroVan MPVs are eligible for importation into the United States. NHTSA published notice of the petition on June 3, 1999 (64 FR 29940) to afford an opportunity for public comment. The reader is referred to that notice for a thorough description of the petition.

One comment was received in response to the notice of the petition, from Volkswagen of America, Inc. (''Volkswagen''), the United States representative of Volkswagen AG, the vehicles' manufacturer. In this comment, Volkswagen observed that modifications beyond those described in the petition would have to be performed to conform a non-U.S. certified EuroVan MPV to Standard No. 114, *Theft Protection.* Volkswagen specifically noted that in addition to the installation of a warning buzzer for the ignition key, a transmission to ignition key interlock system must be installed. Volkswagen stated that this requires a new ignition lock and a relay switch mechanism with a plunger lock for the transmission lockout at the transmission shifter.

Volkswagen also stated that the modifications identified in the petition to conform a non-U.S. certified EuroVan MPV to Standard No. 208, *Occupant Crash Protection,* would be appropriate only for vehicles produced up to September 1, 1994, the date on which the standard's automatic restraint requirements began to be phased in for MPVs. Volkswagen further observed that it sold factory production EuroVan MPVs in the U.S. market in the 1993 and 1994 model years, but that in the 1995 and 1996 model years, the vehicle was only available in a multistage camper version that was not subject to the automatic restraint phase-in requirements. Because the vehicles identified in the petition are not the multistage camper version of the EuroVan MPV, Volkswagen contended that all such vehicles produced after September 1, 1994 would have to comply with the automatic restraint requirement through the installation of an air bag system. Volkswagen stated that such a system was not available in the vehicles that it produced for the 1995 model year. Volkswagen contended that the installation of such a system would require significant additions and alterations to the vehicle, including a new steering column and steering wheel for the driver side and a different instrument panel with welded attachment structures and brackets for installing the instrument panel into the vehicle. Volkswagen observed that the air bag control module is mounted at the tunnel area to support brackets welded to the vehicle structure. Because the control module contains the system sensor, Volkswagen asserted that the procedure by which it is installed is critical to system performance. Volkswagen further observed that a knee impact bar would also have to be installed in the vehicles to comply with the unbelted crash test requirements of the standard. Given the complexity of these modifications, and the welding that would be required to install the air bag system, Volkswagen expressed significant concern that the vehicles could be readily altered to comply with the standard.

NHTSA accorded J.K. an opportunity to respond to Volkswagen's comment. To address the Standard No. 114 compliance issues raised by Volkswagen, J.K. stated that a key warning system will be added to the vehicles, and a new ignition lock and a relay switch mechanism with a plunger lock for the transmission lockout at the transmission shifter. To address the Standard 208 issues raised by Volkswagen, J.K. requested that 1995 model year vehicles be dropped from its petition.

NHTSA believes that J.K.'s decision to drop 1995 model year vehicles from its petition fully addresses the Standard No. 208 compliance issues raised by Volkswagen. NHTSA further notes that the modifications described by J.K. to achieve compliance with Standard No. 114, which have been performed with relative ease on thousands of motor vehicles imported over the years, would not preclude non-U.S. certified 1993–1994 Volkswagen EuroVan MPVs from being found ''capable of being readily altered to comply with applicable motor vehicle safety standards.'' Accordingly, NHTSA has decided to grant the petition.

Vehicle Eligibility Number for Subject Vehicles

The importer of a vehicle admissible under any final decision must indicate on the form HS–7 accompanying entry the appropriate vehicle eligibility number indicating that the vehicle is eligible for entry. VSP–306 is the vehicle eligibility number assigned to vehicles admissible under this notice of final decision.

Final Decision

Accordingly, on the basis of the foregoing, NHTSA hereby decides that 1993–1994 Volkswagen EuroVan MPVs not originally manufactured to comply with all applicable Federal motor vehicle safety standards are substantially similar to 1993–1994 Volkswagen EuroVan MPVs originally manufactured for importation into and sale in the United States and certified under 49 U.S.C. 30115, and are capable of being readily altered to conform to all applicable Federal motor vehicle safety standards.

Authority: 49 U.S.C. 30141(a)(1)(A) and (b)(1); 49 CFR 593.8; delegations of authority at 49 CFR 1.50 and 501.8.

Issued on: August 23, 2000.

Marilynne Jacobs,

Director, Office of Vehicle Safety Compliance.

[FR Doc. 00–21925 Filed 8–25–00; 8:45 am]

BILLING CODE 4910–59–P

DEPARTMENT OF THE TREASURY

Bureau of Alcohol, Tobacco and Firearms

Delegation Order—Delegation of the Director's Authorities in 27 CFR Parts 6, 8, 10 and 11

1. *Purpose.* This order delegates certain authorities of the Director to subordinate ATF officers and prescribes the subordinate ATF officers with whom persons file documents which are not ATF forms.

2. *Background.* Under current regulations, the Director has authority to

take final action on matters relating to ''tied-house,'' exclusive outlets, commercial bribery and consignment sales under the Federal Alcohol Administration Act. We have determined that certain of these authorities should, in the interest of efficiency, be delegated to a lower organizational level.

3. *Delegations.* Under the authority vested in the Director, Bureau of Alcohol, Tobacco and Firearms, by Treasury Order No. 120–1 (formerly 221), dated June 6, 1972, and by 26 CFR 301.7701–9, this ATF order delegates certain authorities to take final action prescribed in 27 CFR Parts 6, 8, 10 and 11 to subordinate officials. Also, this ATF order prescribes the subordinate officials with whom applications, notices, and reports required by 27 CFR Parts 6, 8, 10 and 11, which are not ATF forms, are filed. The following table identifies the regulatory sections, authorities and documents to be filed, and the authorized ATF officials. The authorities in the table may not be redelegated. An ATF organization chart showing the directorates involved in this delegation order has been attached.

Bradley A. Buckles,

Director.

TABLE OF AUTHORITIES AND OFFICERS AUTHORIZED TO ACT OR RECEIVE DOCUMENTS

Regulatory section	Officer(s) authorized to act or receive document
§ 6.6(b)	Inspector or Special Agent to have access to, for the purpose of examination, and the right to copy any documentary evidence.
§ 6.6(b)	Director of Industry Operations or Chief, Alcohol and Tobacco Programs Division to require testimony and evidence by subpoena.
§ 6.6(c)	Deputy Assistant Director (Alcohol and Tobacco).
§ 8.6(b)	Inspector or Special Agent to have access to, for the purpose of examination, and the right to copy any documentary evidence.
§ 8.6(b)	Director of Industry Operations or Chief, Alcohol and Tobacco Programs Division to require testimony and evidence by subpoena.
§ 8.6(c)	Deputy Assistant Director (Alcohol and Tobacco).
§ 10.6(b)	Inspector or Special Agent to have access to, for the purpose of examination, and the right to copy any documentary evidence.
§ 10.6(b)	Director of Industry Operations or Chief, Alcohol and Tobacco Programs Division to require testimony and evidence by subpoena.
§ 10.6(c)	Director of Industry Operations or Chief, Alcohol and Tobacco Programs Division.
§ 11.6(b)	Inspector or Special Agent to have access to, for the purpose of examination, and the right to copy any documentary evidence.
§ 11.6(b)	Director of Industry Operations or Chief, Alcohol and Tobacco Programs Division to require testimony and evidence by subpoena.

BILLING CODE 4810–31–P

ATF Organization

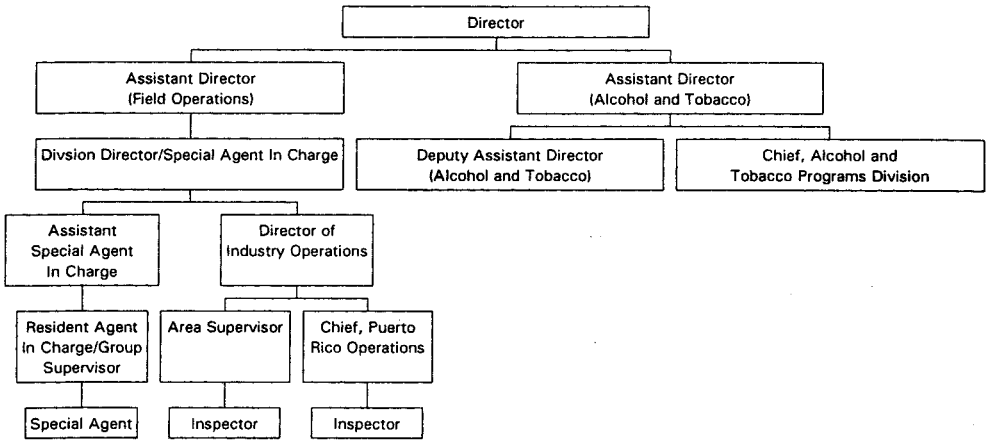

This is not a complete organizational chart of ATF.

[FR Doc. 00–21902 Filed 8–25–00; 8:45 am]
BILLING CODE 4810–31–C

DEPARTMENT OF VETERANS AFFAIRS

Special Medical Advisory Group, Notice of Meeting

As required by the Federal Advisory Committee Act, the VA hereby gives notice that the Special Medical Advisory Group has scheduled a meeting on September 12, 2000. The meeting will convene at 8:30 a.m. and end at 2:00 p.m. The meeting will be held in Room 830 at VA Central Office, 810 Vermont Avenue, N.W., Washington, D.C. The purpose of the meeting is to advise the Secretary and Under Secretary for Health relative to the care and treatment of disabled veterans, and other matters pertinent to the Department's Veterans Health Administration (VHA).

The agenda for the meeting will include a presentation on VHA information management, focusing on the computerized patient record and a government wide patient record, an update on telemedicine, and the committee will be reviewing Capital Access Realignment for Enhanced Services Evaluation Criteria.

All sessions will be open to the public. Those wishing to attend should contact Celestine Brockington, Office of the Under Secretary for Health, Department of Veterans Affairs. Her phone number is 202–273–5878.

Dated: August 14, 2000.

By direction of the Acting Secretary of Veterans Affairs.

Marvin R. Eason,

Committee Management Officer.

[FR Doc. 00–21826 Filed 8–25–00; 8:45 am]

BILLING CODE 8320–01–M

Corrections

Federal Register
Vol. 65, No. 167
Monday, August 28, 2000

This section of the FEDERAL REGISTER contains editorial corrections of previously published Presidential, Rule, Proposed Rule, and Notice documents. These corrections are prepared by the Office of the Federal Register. Agency prepared corrections are issued as signed documents and appear in the appropriate document categories elsewhere in the issue.

DEPARTMENT OF THE TREASURY

Internal Revenue Service

26 CFR Part 25

[TD 8886]

RIN 1545–AX07

Use of Actuarial Tables in Valuing Annuities, Interests for Life or Terms of Years, and Remainder or Reversionary Interests

Correction

In the correction of rule document 00–12896 on page 39470 in the issue of Monday, June 26, 2000, make the following correction:

§25.2512–5 [Corrected]

On page 39470, in the third column, in §25.2512–5, in the second line, ''§25.2512–5(d)(2)(C)(v)(A) *Example*'' should read ''§25.2512–5(d)(2)(v)(A) *Example* ''.

[FR Doc. C0–12986 Filed 8–25–00; 8:45 am]

BILLING CODE 1505–01–D

Federal Register

Monday,
August 28, 2000

Part II

Environmental Protection Agency

40 CFR Part 63

National Emission Standards for Hazardous Air Pollutants: Cellulose Products Manufacturing; Proposed Rule

ENVIRONMENTAL PROTECTION AGENCY

40 CFR Part 63

[FRL–6853–6]

RIN 2060–AH11

National Emission Standards for Hazardous Air Pollutants: Cellulose Products Manufacturing

AGENCY: Environmental Protection Agency (EPA).

ACTION: Proposed rule.

SUMMARY: This action proposes national emission standards for hazardous air pollutants (NESHAP) for cellulose products manufacturing. Cellulose products manufacturing includes both the Viscose Processes source category and the Cellulose Ethers source category. The Viscose Processes source category comprises the cellulose food casing, rayon, cellophane, and cellulosic sponge industries. The Cellulose Ethers source category comprises the methyl cellulose, hydroxypropyl methyl cellulose, hydroxypropyl cellulose, hydroxyethyl cellulose, and carboxymethyl cellulose industries. The EPA has identified the Viscose Processes source category and the Cellulose Ethers source category as including major sources of hazardous air pollutant (HAP) emissions, such as carbon disulfide (CS_2), carbonyl sulfide (COS), ethylene oxide, methanol, methyl chloride, propylene oxide, and toluene. These proposed standards will implement section 112(d) of the Clean Air Act (CAA) by requiring all major sources to meet HAP emission standards reflecting the application of the maximum achievable control technology (MACT). The proposed standards will reduce HAP emissions by approximately 4,060 tons per year (ton/yr). In addition, the proposed standards will reduce hydrogen sulfide (H_2S) emissions by approximately 1,490 ton/yr.

DATES: *Comments.* Submit comments on or before October 27, 2000.

Public Hearing. If anyone contacts us requesting to speak at a public hearing by September 18, 2000, a public hearing will be held on September 27, 2000.

ADDRESSES: *Comments.* Written comments should be submitted (in duplicate if possible) to: Air and Radiation Docket and Information Center (6102), Attention Docket Number A–99–39, Room M–1500, U.S. Environmental Protection Agency, 1200 Pennsylvania Anenue, NW., Washington, DC 20460. We request a separate copy also be sent to the contact person listed below in the **FOR FURTHER INFORMATION CONTACT** section.

Public Hearing. If a public hearing is held, it will be held at 10:00 a.m. on September 27, 2000 in our Office of Administration Auditorium, Research Triangle Park, North Carolina, or at an alternate site nearby.

Docket. Docket No. A–99–39 contains supporting information used in developing the standards. The docket is located at the U.S. Environmental Protection Agency, 401 M Street, SW., Washington, DC 20460 in room M–1500, Waterside Mall (ground floor), and may be inspected from 8:30 a.m. to 5:30 p.m., Monday through Friday, excluding legal holidays.

FOR FURTHER INFORMATION CONTACT: For questions about the proposed rule, contact Mr. William Schrock; Organic Chemicals Group; Emission Standards Division (MD–13); U.S. Environmental Protection Agency; Research Triangle Park, North Carolina, 27711; (919) 541–5032; schrock.bill@epa.gov. For questions about the public hearing, contact Ms. Maria Noell; Organic Chemicals Group; Emission Standards Division (MD–13); U.S. Environmental Protection Agency; Research Triangle Park, North Carolina 27711; (919) 541–5673; noell.maria@epa.gov.

SUPPLEMENTARY INFORMATION:

Comments. Comments and data may be submitted by electronic mail (e-mail) to: a-and-r-docket@epa.gov. Electronic comments must be submitted as an ASCII file to avoid the use of special characters and encryption problems and will also be accepted on disks in WordPerfect® version 5.1, 6.1 or Corel 8 file format. All comments and data submitted in electronic form must note the docket number: A–99–39. No confidential business information (CBI) should be submitted by e-mail. Electronic comments may be filed online at many Federal Depository Libraries.

Commenters wishing to submit proprietary information for consideration must clearly distinguish such information from other comments and clearly label it as CBI. Send submissions containing such proprietary information directly to the following address, and not to the public docket, to ensure that proprietary information is not inadvertently placed in the docket: Attention: Mr. William Schrock; c/o OAQPS Document Control Officer (Room 740B); U.S. Environmental Protection Agency; 411 W. Chapel Hill Street; Durham, NC 27701. We will disclose information identified as CBI only to the extent allowed by the procedures set forth in 40 CFR part 2. If no claim of confidentiality accompanies a submission when we receive it, the information may be made available to the public without further notice to the commenter.

Public Hearing. Persons interested in presenting oral testimony or inquiring as to whether a hearing is to be held should contact Ms. Maria Noell at least 2 days in advance of the public hearing. Persons interested in attending such a public hearing must also contact Ms. Noell to verify the time, date, and location of the hearing. The address, telephone number, and e-mail address for Ms. Noell are listed in the preceding **FOR FURTHER INFORMATION CONTACT** section. If a public hearing is held, it will provide interested parties the opportunity to present data, views, or arguments concerning these proposed emission standards.

Docket. The docket is an organized and complete file of all the information considered by us in the development of this rulemaking. The docket is a dynamic file because material is added throughout the rulemaking process. The docketing system is intended to allow members of the public and industries involved to readily identify and locate documents so that they can effectively participate in the rulemaking process. Along with the proposed and promulgated standards and their preambles, the contents of the docket will serve as the record in the case of judicial review. (See section 307(d)(7)(A) of the CAA.) The regulatory text and other materials related to this rulemaking are available for review in the docket or copies may be mailed on request from the Air Docket by calling (202) 260–7548. A reasonable fee may be charged for copying docket materials.

Worldwide Web (WWW). In addition to being available in the docket, an electronic copy of today's proposed rule will also be available on the WWW through the Technology Transfer Network (TTN). Following the Administrator's signature, a copy of the rule will be posted on the TTN's policy and guidance page for newly proposed or promulgated rules http://www.epa.gov/ttn/oarpg. The TTN provides information and technology exchange in various areas of air pollution control. If more information regarding the TTN is needed, call the TTN HELP line at (919) 541–5384.

Regulated Entities. Categories and entities potentially regulated by this action include those listed in the following table.

Category	SIC	NAICS	Examples of regulated entities
Industry	3089	326199	cellulose food casing operations. cellophane operations. cellulosic sponge operations.
	2821	325211	cellulosic sponge operations.
	2823	325221	rayon operations.
	2819	325188	
	2869	325199	cellulose ether operations.

This table is not intended to be exhaustive, but rather provides a guide for readers regarding entities likely to be regulated by this action. To determine whether your process operation is regulated by this action, you should examine the applicability criteria in § 63.5481 of the proposed rule. If you have any questions regarding the applicability of this action to a particular entity, consult the person listed in the preceding **FOR FURTHER INFORMATION CONTACT** section.

Outline. The information presented in this preamble is organized as follows:

I. Background

A. What is the source of authority for development of NESHAP?
B. What criteria are used in the development of NESHAP?
C. What is the history of the source categories?
D. What are the health effects associated with the pollutants emitted from cellulose products manufacturing operations?

II. Summary of the Proposed Rule

A. What source categories and subcategories are affected by this proposed rule?
B. What are the primary sources of HAP emissions and what are the emissions?
C. What is the affected source?
D. What are the emission limits, operating limits and other standards?
E. What are the testing and initial compliance requirements?
F. What are the continuous compliance provisions?
G. What are the notification, recordkeeping and reporting requirements?

III. Rationale for Selecting the Proposed Standards

A. How did we select the source categories?
B. How did we select any subcategories?
C. How did we select the affected source?
D. How did we determine the basis and level of the proposed standards for the Viscose Processes source category?
E. How did we determine the basis and level of the proposed standards for the Cellulose Ethers source category?
F. How did we select the form of the standards?
G. How did we select the alternative standards?
H. How did we select the standards for the Viscose Processes source category?
I. How did we select the standards for the Cellulose Ethers source category?
J. How did we select the testing and initial compliance requirements?
K. How did we select the continuous compliance requirements?
L. How did we select the notification, reporting, and recordkeeping requirements?
M. What is the relationship of this rule to other rules?

IV. Summary of Environmental, Energy and Economic Impacts

A. What are the air quality impacts?
B. What are the cost impacts?
C. What are the economic impacts?
D. What are the non-air health, environmental and energy impacts?

V. Solicitation of Comments and Public Participation

VI. Administrative Requirements

A. Executive Order 12866, Regulatory Planning and Review
B. Executive Order 13132, Federalism
C. Executive Order 13084, Consultation and Coordination with Indian Tribal Governments
D. Executive Order 13045, Protection of Children from Environmental Health Risks and Safety Risks
E. Unfunded Mandates Reform Act of 1995
F. Regulatory Flexibility Act (RFA), as amended by the Small Business Regulatory Enforcement Fairness Act of 1966 (SBREFA), 5 U.S.C. 601 et. Seq.
G. Paperwork Reduction Act
H. National Technology Transfer and Advancement Act of 1995

I. Background

A. What is the source of authority for development of NESHAP?

The CAA was enacted, in part, ''to protect and enhance the quality of the Nation's air resources so as to promote the public health and welfare and the productive capacity of its population * * *'' (section 101(b)(1) of the CAA). Section 112 of the CAA requires us to list categories and subcategories of major sources and area sources of HAP and to establish NESHAP for the listed source categories and subcategories. The categories of major sources covered by today's proposed NESHAP were listed on the following dates: Cellulose Food Casings, Rayon, Cellophane, Methyl Cellulose, Carboxymethyl Cellulose, and Cellulose Ethers—July 16, 1992 (57 FR 31576); and Cellulosic Sponges—November 18, 1999 (64 FR 63026). Major sources of HAP are those that have the potential to emit greater than 10 ton/yr of any one HAP or 25 ton/yr of any combination of HAP.

B. What criteria are used in the development of NESHAP?

Section 112 of the CAA requires that we establish NESHAP for the control of HAP from both new and existing major sources. The CAA requires the NESHAP to reflect the maximum degree of reduction in emissions of HAP that is achievable. This level of control is commonly referred to as the MACT.

The MACT floor is the minimum control level allowed for NESHAP and is defined under section 112(d)(3) of the CAA. In essence, the MACT floor ensures that the standard is set at a level that assures that all major sources achieve the level of control at least as stringent as that already achieved by the better-controlled and lower-emitting sources in each source category or subcategory. For new sources, the MACT floor cannot be less stringent than the emission control that is achieved in practice by the best-controlled similar source. The MACT standards for existing sources can be less stringent than standards for new sources, but they cannot be less stringent than the average emission limitation achieved by the best-performing 12 percent of existing sources in the category or subcategory (or the best-performing 5 sources for categories or subcategories with fewer than 30 sources).

In developing MACT, we also consider control options that are more stringent than the floor. We may establish standards more stringent than the floor based on the consideration of cost of achieving the emissions reductions, any non-air quality health and environmental impacts, and energy requirements.

C. What is the history of the source categories?

1. Listing the Initial Source Categories

Section 112 of the CAA requires us to establish emission standards for categories of stationary sources that emit HAP. On July 16, 1992, we published an initial list of source categories to be regulated (57 FR 31576). Today's proposed rule groups the various cellulose products manufacturing industries included in the initial list with another industry recently added to the list and combines them to create two new source categories.

The initial source category list included separate source categories for various cellulose products manufacturing industries. These source categories are Cellulose Food Casings, Rayon, Cellophane, Methyl Cellulose, Carboxymethyl Cellulose, and Cellulose Ethers. The Cellulose Ethers source

category on the initial list included the hydroxyethyl cellulose, hydroxypropyl cellulose, and hydroxypropyl methyl cellulose industries.

2. Adding Another Source Category

In developing this proposed rule, we identified another cellulose products manufacturing industry, cellulosic sponge manufacturing, that was not on the initial source category list. Based on information we obtained while gathering data for this proposed rule, we determined that the production of cellulosic sponges is similar to the production of some of the other cellulose products (cellulose food casings, rayon, and cellophane). We found similarities in raw materials, process operations, emission characteristics, and control device applicability. We added Cellulosic Sponges to the source category list under section 112(c) of the CAA on November 18, 1999 (64 FR 63026).

3. Reducing to Two Source Categories

In developing the proposed rule, we decided to combine the various cellulose products manufacturing source categories on the initial source category list with the Cellulosic Sponge source category that was listed November 18, 1999. Then we split out the Cellulose Food Casing, Rayon, Cellophane, and Cellulosic Sponge manufacturing industries and combined them to create a new source category named ''Viscose Processes.'' We split out the various cellulose ether industries (Methyl Cellulose, Carboxymethyl Cellulose, and Cellulose Ethers) and combined them to create a new source category named ''Cellulose Ethers.''

Within each new source category (Viscose Processes and Cellulose Ethers), we found similarities in raw materials, process operations, emission characteristics, and control device applicability. Based on these factors, we concluded that separate MACT standards were not warranted for each of the individual cellulose products source categories on the source category list.

Instead, we believe that it is technically feasible to regulate emissions from a variety of viscose process operations (or a variety of cellulose ether operations) by a single set of standards. Similar to the Hazardous Organic NESHAP (HON) for the Synthetic Organic Chemical Manufacturing Industry (SOCMI), we are proposing separate requirements for process vents, storage vessels, equipment leaks, and wastewater HAP emission points.

One set of standards for each of the two new source categories would ensure that process equipment with comparable HAP emissions and control technologies are subject to consistent emission control requirements. In addition, some of the cellulose ether operations are collocated within individual plants. Plants with collocated cellulose ether manufacturing operations could more easily comply with one set of standards than with individual standards for each of the collocated process operations.

D. What are the health effects associated with the pollutants emitted from cellulose products manufacturing operations?

Today's proposed rule protects air quality and promotes the public health by reducing emissions of some of the HAP listed in section 112(b)(1) of the CAA. Available emission data, collected as we developed this proposed rule, show that CS_2, COS, and toluene are the HAP emitted in the greatest quantities from viscose process operations. Ethylene oxide, methanol, methyl chloride, and propylene oxide are the HAP emitted in the greatest quantities from cellulose ether operations. Exposure to these HAP has been demonstrated to cause adverse health effects.

This section describes the adverse health effects associated with the exposure to these specific HAP. The adverse health effects resulting from exposure to HAP can range from mild to severe. The severity of health effects resulting from HAP exposure depends on: (1) Concentrations of HAP in the area; (2) the amount of time a person is exposed; and (3) characteristics of exposed individuals (such as genetics, age, pre-existing health conditions, and lifestyle) which vary significantly among the population. Exposure is also influenced by source-specific characteristics (such as emission rates and local meteorological conditions), as well as pollutant-specific characteristics.

The HAP that this proposed rule would control are associated with a variety of adverse health effects. These adverse health effects include chronic health disorders (such as effects on the central nervous and reproductive systems) and acute health disorders (such as irritation of eyes, throat, and mucous membranes and narcotic effects). Three of the HAP have been classified as probable or possible human carcinogens. In general, these findings have only been shown with concentrations higher than those typically found in the ambient air.

We do not have the kind of current, detailed data on the operations covered by today's proposed rule (and the people living around the operations) that are necessary to determine the actual population exposures to the HAP emitted from these operations and the potential for resultant health effects. Therefore, we do not know the extent to which the adverse health effects described above occur in the populations surrounding these operations. However, to the extent the adverse effects do occur, this proposed rule will reduce emissions and subsequent exposures.

1. Health Effects Associated with HAP Emitted from Viscose Process Operations

Acute (short-term) inhalation exposure of humans to CS_2 has caused changes in breathing and chest pains. Nausea, vomiting, dizziness, fatigue, headache, mood changes, lethargy, blurred vision, delirium, and convulsions have also been reported in humans acutely exposed by inhalation. Neurologic effects, including behavioral and neurophysiological changes, have been observed in chronic (long-term) human and animal inhalation studies. Reproductive effects, such as decreased sperm count and menstrual disturbances, have been observed in humans exposed to CS_2 by inhalation. Developmental effects, including birth defects, toxicity to the embryo, and functional and behavioral disturbances, have been observed in animal studies. We have not classified CS_2 with respect to potential human carcinogenicity.

Acute (short-term) inhalation of high concentrations of COS may cause narcotic effects in humans. Carbonyl sulfide may also irritate the eyes and skin in humans. No information is available on the chronic (long-term), reproductive, developmental, or carcinogenic effects of COS in humans. We have not classified COS with respect to potential human carcinogenicity.

Acute (short-term) inhalation of toluene by humans may cause effects to the central nervous system (CNS), such as fatigue, sleepiness, headache, and nausea, as well as irregular heartbeat. Adverse CNS effects have been reported in chronic abusers exposed to high levels of toluene. Symptoms include tremors, decreased brain size, involuntary eye movements, and impaired speech, hearing, and vision. Chronic (long-term) inhalation exposure of humans to lower levels of toluene also causes irritation of the upper respiratory tract, eye irritation, sore throat, nausea, dizziness, headaches, and difficulty with sleep. Studies of

children of pregnant women exposed by inhalation to toluene or to mixed solvents have reported CNS problems, facial and limb abnormalities, and delayed development. However, these effects may not be attributable to toluene alone.

2. Health Effects Associated with HAP Emitted from Cellulose Ether Operations

The acute (short-term) effects of ethylene oxide in humans consist mainly of CNS depression and irritation of the eyes and mucous membranes. High concentrations of ethylene oxide produce weakness, nausea, bronchitis, pulmonary edema, emphysema, and death. Chronic (long-term) exposure to ethylene oxide in humans can cause irritation of the eyes, skin, and mucous membranes, and adversely affect the functioning of the brain and nerves. Limited evidence from animal and human studies indicates that inhalation exposure to ethylene oxide may result in adverse reproductive effects, such as an increased rate of miscarriages. Some limited human cancer data suggest an increase in the incidence of leukemia, stomach cancer, cancer of the pancreas, and Hodgkin's disease in workers exposed to ethylene oxide. Ethylene oxide has been shown to cause lung, gland, and uterine tumors in laboratory animals. We have classified ethylene oxide as a Group B1 (probable) human carcinogen.

Acute (short-term) or chronic (long-term) exposure of humans to methanol by inhalation or ingestion may result in blurred vision, headache, dizziness, and nausea. No information is available on the reproductive, developmental, or carcinogenic effects of methanol in humans. Birth defects have been observed in the offspring of rats and mice exposed to methanol by inhalation. A methanol inhalation study using rhesus monkeys reported a decrease in the length of pregnancy and limited evidence of impaired learning ability in offspring. We have not classified methanol with respect to potential human carcinogenicity.

Acute (short-term) exposure to high concentrations of methyl chloride in humans causes severe neurological effects, including convulsions, coma, and death. Methyl chloride also affects the heart rate, blood pressure, liver, and kidney function in humans. No information is available regarding chronic (long-term) systemic effects of methyl chloride in humans, but animal studies have reported effects to the liver, kidney, spleen, and CNS. No information is available concerning developmental or reproductive effects of methyl chloride in humans. Inhalation studies have demonstrated that methyl chloride causes reproductive effects in male rats, with effects such as testicular lesions and decreased sperm production. We have classified methyl chloride as a Group C (possible) human carcinogen on the basis of limited human data and animal studies that have reported kidney tumors in male mice.

Acute (short-term) exposure of workers to propylene oxide may cause CNS effects, such as headache, weakness, loss of coordination, and coma. Propylene oxide also irritates the eyes and respiratory tract, causing coughing and difficulty in breathing, possibly leading to pulmonary edema and pneumonia. Health effects from chronic propylene oxide exposure in humans have not been reported. Chronic (long-term) animal studies have reported neurological disorders and inflammatory lesions of the nasal cavity, trachea, and lungs. We have classified propylene oxide as a Group B2 (probable) human carcinogen on the basis of nasal tumors observed in rodents exposed by inhalation.

II. Summary of the Proposed Rule

A. What source categories and subcategories are affected by this proposed rule?

Today's proposed rule applies to the Viscose Processes source category and the Cellulose Ethers source category. There are no subcategories.

B. What are the primary sources of HAP emissions and what are the emissions?

The primary sources of HAP emissions at cellulose products manufacturing operations are process vents, storage vessels, equipment leaks, and wastewater systems. Total baseline HAP emissions for all cellulose products manufacturing operations at the current level of control are 20,700 ton/yr. Baseline emissions from process vents account for most of the emissions, or approximately 92 percent of the total. Baseline emissions from wastewater, equipment leaks, and storage vessels account for approximately 4 percent, 3 percent, and 1 percent of the total, respectively.

C. What is the affected source?

The affected source for the Viscose Processes source category is the sum of all operations engaged in the production of cellulose food casing, rayon, cellophane, or cellulosic sponge. The affected source for the Cellulose Ethers source category is the sum of all operations engaged in the production of cellulose ethers.

D. What are the emission limits, operating limits and work practice standards?

As provided under the authority of CAA section 112(h), we are proposing the requirements of this rule in the form of emission limits (such as mass rate, percent reduction, and concentration emission limits), operating limits, and work practice standards. Work practice standards include design, equipment, work practices, and operational standards.

In establishing HAP emission limits for viscose process affected sources, we selected total sulfide emissions as a surrogate for HAP emissions of CS_2 and COS. We are defining total sulfide emissions as the sum of all CS_2, COS, and H_2S emissions (reported as CS_2). (Emissions of H_2S are included because they are generated from by-products of the CS_2 reactions in the viscose process operation.) We are requiring owners and operators of cellulose food casing, rayon, cellophane, and cellulosic sponge operations at both new and existing viscose process affected sources to reduce the total sulfide emissions from their process vents by a specified percentage, which is unique to the type of viscose process operation.

We are requiring owners and operators of any of the three types of cellulose ether operations at both new and existing cellulose ether affected sources to reduce the total HAP emissions from their process vents by 99 percent. The HAP included in total HAP vary for each cellulose ether operation, depending on the cellulose ether product being manufactured.

We are requiring owners and operators of cellulose food casing, rayon, cellophane, and cellulosic sponge operations at both new and existing viscose process affected sources to control the CS_2 emissions from their CS_2 unloading and storage operations by complying with one of the following options: (1) Reducing CS_2 emissions by at least 83 percent using any compliance method, or (2) installing a nitrogen system for CS_2 unloading and storage, or (3) obtaining an equivalent emission reduction from elsewhere in the viscose process (such as process vents).

We are requiring owners and operators of cellulose ether operations at both new and existing cellulose ether affected sources to reduce the HAP emissions from their wastewater by complying with the applicable process wastewater provisions in subpart G of 40 CFR part 63.

We are requiring owners and operators of cellulose ether operations at both new and existing cellulose ether

affected sources to reduce the HAP emissions from equipment leaks by complying with the equipment leak provisions in subpart H of 40 CFR part 63. We are considering allowing owners or operators that can demonstrate that they are below a certain number of leaks an alternative to complying with the equipment leak provisions in subpart H; that is, they may comply with the equipment leak provisions in the proposed subpart F of 40 CFR part 65 (65 FR 57837, October 28, 1998) after it becomes final and we evaluate its requirements.

It is generally not cost effective for owners and operators of these affected sources to continuously test the emission control devices to ensure continuous compliance with the emission standards. Therefore, for the most likely control devices to be used, this proposed rule specifies operating parameters that can be monitored to demonstrate continuous compliance. This proposed rule also specifies operating limits for these parameters. We have established operating limits for carbon adsorbers, thermal oxidizers, condensers, biofilters, oil absorbers, wet scrubbers, and flares.

Owners and operators of affected sources that use a control device other than those listed in this proposed rule may establish operating limits for the appropriate operating parameters subject to prior written approval from the Administrator. The owners and operators must submit for approval a proposed site-specific monitoring plan that includes a description of the alternative control device, test results verifying the performance of the control device, the appropriate operating parameters that will be monitored, and the frequency of measuring and recording to establish continuous compliance with the operating limits. The owners and operators of the affected sources must install, operate, and maintain the parameter monitoring system for the alternative control device in accordance with the monitoring plan approved by the Administrator. The owners and operators will also establish operating limits during the initial performance test based on the operating parameters for the alternative control device included in the approved monitoring plan.

Owners and operators of affected sources that use a control device listed in this proposed rule may establish operating limits for alternative operating parameters subject to prior written approval by the Administrator. The owner and operators must submit the application for approval of alternative operating parameters no later than the notification of the performance test. The application must include information justifying the request for alternative operating parameters (such as the infeasibility or impracticality of using the operating parameters in this proposed rule), a description of the proposed alternative control device operating parameters, the monitoring approach, the frequency of measuring and recording the alternative parameters, the averaging period for the operating limits, how the operating limits are to be calculated, and information documenting that the alternative operating parameters would provide equivalent or better assurance of compliance with the relevant emission limit. The owners and operators of the affected sources must install, operate, and maintain the alternative parameter monitoring systems in accordance with the application approved by the Administrator. The owners and operators will establish operating limits during the initial performance test based on the alternative operating parameters included in the approved application.

E. What are the testing and initial compliance requirements?

We are requiring owners and operators of all affected sources to conduct an initial performance test using specified EPA test methods to demonstrate initial compliance with the emission limits for process vents. The owner or operator would test at the inlet and outlet to the control device and at the stack(s) for the process operation and, using these results, calculate a percent reduction of emissions.

We are also requiring owners and operators of all viscose process affected sources to prepare a material balance that documents HAP usage and HAP emissions at the affected source. The material balance would be based on HAP emissions information from the initial performance test and HAP usage information from records at the affected source.

Prior to the initial performance test, owners and operators of affected sources are required to install the parameter monitoring equipment to be used to demonstrate compliance with the operating limits. During the initial test, the owners or operators would use the parameter monitoring equipment to establish operating parameter limits.

We are requiring owners and operators of cellulose food casing, rayon, cellophane, and cellulosic sponge operations at new and existing viscose process affected sources to demonstrate initial compliance with the emission limits and work practice standards for CS_2 unloading and storage operations by: (1) Documenting an 85 percent reduction in emissions from CS_2 unloading and storage operations; or (2) certifying that a nitrogen system is being used in CS_2 unloading and storage operations to prevent emissions; or (3) complying with the initial compliance requirements for process vents at viscose process affected sources, such that the total emission reductions from process vents equals the required emission reductions from both process vents and CS_2 unloading and storage operations.

We are requiring owners and operators of cellulose ether operations at new and existing cellulose ether affected sources to comply with the initial compliance provisions for process wastewater in subpart G of 40 CFR part 63.

We are requiring owners and operators of cellulose ether operations at new and existing cellulose ether affected sources to comply with the initial compliance provisions for equipment leaks in subpart H of 40 CFR part 63.

F. What are the continuous compliance provisions?

We are requiring owners and operators of all affected sources to monitor and record the operating parameters established during the initial performance test and calculate average operating parameter values averaged over the period of time specified in this proposed rule to demonstrate continuous compliance with the operating limits.

We are also requiring owners and operators of all viscose process affected sources to maintain the material balance documenting HAP usage and HAP emissions that they established as part of their initial compliance requirements. The owners and operators would use the HAP usage and HAP emissions information from the material balance to calculate the percent reduction in emissions and demonstrate continuous compliance with the emission limits.

We are requiring owners and operators of cellulose food casing, rayon, cellophane, and cellulosic sponge operations at new and existing viscose process affected sources to demonstrate continuous compliance with the emission limits and work practice standards for CS_2 unloading and storage operations by: (1) Keeping a record documenting the 85 percent reduction in emissions; or (2) keeping a record certifying that a nitrogen system is being used; or (3) complying with the continuous compliance requirements for process vents at viscose process affected

sources, such that the total emission reductions from process vents equals the required emission reductions from both process vents and CS_2 unloading and storage operations.

We are requiring owners and operators of cellulose ether operations at new and existing cellulose ether affected sources to comply with the continuous compliance provisions for process wastewater in subpart G of 40 CFR part 63.

We are requiring the owners and operators of cellulose ether operations at new and existing cellulose ether affected sources to comply with the continuous compliance provisions for equipment leaks in subpart H of 40 CFR part 63.

G. What are the notification, reporting, and recordkeeping requirements?

We are requiring owners and operators of all affected sources to submit initial notifications, notifications of performance tests, and notifications of compliance status by the specified dates in the proposed rule, which may vary depending on whether the affected source is new or existing.

We are also requiring owners and operators of all affected sources to submit semiannual compliance reports. In addition, if an owner or operator undertakes action that is inconsistent with their approved startup, shutdown, and malfunction (SSM) plan, then we are requiring that they submit SSM reports within 2 days of starting such action and within 7 days of ending such action.

We are requiring owners and operators of all affected sources to keep a copy of each notification and report, along with supporting documentation. Owners and operators of all affected sources also must keep records related to SSM, records of performance tests, and records for each continuous parameter monitoring system. Owners and operators of those viscose process affected sources that comply with the work practice standard for CS_2 unloading and storage operations requiring installation of a nitrogen system must keep records certifying that a nitrogen system is being used. Owners and operators of all viscose process affected sources must keep records of all material balances and calculations documenting the percent reduction in HAP emissions.

III. Rationale for Selecting the Proposed Standards

A. How did we select the source categories?

Today's proposed rule applies to the Viscose Processes source category and the Cellulose Ethers source category. We are creating these two source categories by combining seven existing source categories based on the differences between the categories and the similarities within each category with regard to raw materials, process operations, emission characteristics, and control device applicability.

1. Raw Materials

Both viscose process operations and cellulose ether operations use cellulose and sodium hydroxide (NaOH) as raw materials to produce alkali cellulose. However, after the production of alkali cellulose, the viscose process operations and cellulose ether operations add different chemicals to the process. All of the viscose process operations use primarily CS_2, while the cellulose ether operations use a variety of chemicals (such as propylene oxide, ethylene oxide, chloroacetic acid, and methyl chloride), depending upon the type of cellulose ether being produced. Some of the cellulose ether operations use the same chemicals. For example, both the methyl cellulose and hydroxypropyl methyl cellulose operations use methyl chloride, and both the hydroxypropyl methyl cellulose and hydroxypropyl cellulose operations use propylene oxide.

2. Process Operations

Although both operations produce alkali cellulose, the viscose process operations and cellulose ether operations are completely different in terms of the process steps and equipment used. For example, all of the viscose process operations include the following process steps: (1) production of alkali cellulose from cellulose and NaOH, (2) production of sodium cellulose xanthate from alkali cellulose and CS_2 (xanthation), (3) production of viscose from sodium cellulose xanthate and NaOH solution, (4) regeneration of liquid viscose into solid cellulose, and (5) washing of the solid cellulose product.

The cellulose ether operations include mostly different process steps, as follows: (1) production of alkali cellulose from cellulose and NaOH, (2) reaction of the alkali cellulose with organic chemical(s) to produce a cellulose ether product, (3) washing and purification of the cellulose ether product, and (4) drying of the cellulose ether product.

3. Emission Characteristics

Viscose process operations emit primarily CS_2, whereas cellulose ether operations do not use or emit CS_2. Emissions from cellulose ether operations include ethylene oxide, methanol, methyl chloride, and propylene oxide. The type of emissions depends upon the type of cellulose ether produced. Some of the cellulose ether operations have the same type of emissions; for example, the methyl cellulose, hydroxypropyl methyl cellulose, and carboxymethyl cellulose operations all emit methanol as a by-product of the reaction.

4. Control Device Applicability

All of the viscose process operations are subject to a permissible exposure limit (PEL) for CS_2 from the U.S. Occupational Safety and Health Administration (OSHA) that requires owners or operators to reduce worker exposure to CS_2 inside the buildings. The viscose process operations have been able to reduce worker exposure to CS_2 by increasing gas flow rates (thereby reducing CS_2 concentrations) and enclosing some processes. As a result, viscose process operations have lower HAP concentrations and higher gas flow rates compared to cellulose ether operations.

Because the viscose process operations and cellulose ether operations are different in terms of the type and concentration of HAP emitted as well as the gas flow rate, the types of control devices that are applicable to the viscose process operations and cellulose ether operations are also different. Cellulose ether operations are better able to apply certain types of control devices, such as condensers, that require high-concentration, low-flow gas streams to operate effectively. Control devices that are effective on low-concentration, high-flow gas streams, such as biofilters and carbon adsorbers, are the most viable options for reducing CS_2 emissions from the viscose process operations.

Some control devices that cellulose ether operations have effectively employed on their organic HAP emissions cannot be as easily employed by viscose process operations on their CS_2 emissions. For example, while wet scrubbers are effective control devices for cellulose ether operations, available data show them to have little effect on CS_2 emissions at viscose process operations. Also, viscose process operations have special concerns regarding the flammability of CS_2 that cellulose ether operations do not have to consider in selecting a control device.

B. How did we select any subcategories?

1. Viscose Process Industry

We reviewed the available information on the viscose process

industry and determined that the various viscose process operations should not be subcategorized. We found that viscose process operations are generally similar with respect to types of raw materials, emissions, initial process steps, and control device applicability.

We are establishing a single set of standards across the Viscose Processes source category in those areas (such as CS_2 unloading and storage, wastewater emissions, and equipment leaks) where we have found important similarities between the various viscose process operations. For example, most viscose process operations use nitrogen or water displacement to unload the liquid CS_2 from the railcar in order to control CS_2 emissions during unloading, and they use nitrogen or water padding in the head space of the CS_2 storage vessels in order to control CS_2 emissions from the vessels.

Other similarities between the various viscose process operations include how they address wastewater emissions and equipment leaks. None of the viscose process operations take any measures to control the CS_2 emissions from their wastewater, and none of the viscose process operations are subject to Federal or State leak detection and repair (LDAR) requirements to control the CS_2 emissions from their equipment leaks.

However, we are establishing separate limits for the various viscose process operations (cellulose food casing, rayon, cellophane, and cellulosic sponge) in those areas (such as process vents) where we have found important differences between the various viscose operations. We found some differences between the various viscose process operations with respect to final process steps and final products. For example, some viscose process operations use different methods and equipment to complete the regeneration step. Cellulose food casing operations extrude viscose through a die, forming a tube, while rayon operations extrude viscose through spinnerets, forming thin strands. Cellophane operations extrude viscose through a long slit, forming a flat sheet, while cellulosic sponge operations feed a mixture of viscose and Glauber's salt into a sponge mold. Also, cellulose food casing, rayon, and cellophane operations use a hot acid solution in their regeneration step, while cellulosic sponge operations use either a hot salt solution or electricity.

The various viscose process operations produce a variety of products, such as cellulose food casings, rayon, cellophane, and cellulosic sponges, all of which compete in different economic markets. None of the viscose process operations produces more than one of these products. For example, a cellulose food casing operation does not also produce rayon or cellophane.

2. Cellulose Ether Industry

We reviewed the available information on the cellulose ether industry and determined that the Cellulose Ethers source category should not be subcategorized. We found that the various cellulose ether operations are sufficiently similar with respect to their process steps and control device applicability to justify keeping the various operations in one category. Therefore, we are establishing a single set of standards across the Cellulose Ethers source category.

C. How did we select the affected source?

In selecting the affected source for the Viscose Processes source category and the Cellulose Ethers source category, we included all equipment that emits HAP, such as process vents, storage vessels, wastewater treatment processes, and other components (such as pumps, valves, flanges, sampling connections, compressors, and pressure relief devices). In addition, because ''reconstruction,'' as defined in § 63.2 of subpart A of 40 CFR part 63, is calculated based on the affected source, we also included other auxiliary equipment that is necessary to make the operation run but which may not emit HAP.

We are defining the affected source broadly to include the sum of all operations engaged in the production of the cellulose product (that is, cellulose food casing, rayon, cellophane, cellulosic sponge, or cellulose ethers). We defined the affected source broadly because emissions from the sum of all operations are better documented than emissions from individual process lines or emission points. In addition, by defining the affected source broadly, it is less likely that a change will trigger new source MACT. New source MACT would be triggered when the fixed capital cost of new components exceeds 50 percent of the fixed capital cost for all components that would be required to construct a comparable new affected source. Because emissions averaging takes place within the affected source, a broadly defined affected source would provide owners and operators with more flexibility in conducting any emissions averaging.

D. How did we determine the basis and level of the proposed standards for the Viscose Processes source category?

The following sections present the basis for determining the components of the MACT floor for equipment leaks, wastewater emissions, CS_2 unloading and storage operations, and process vents for the Viscose Processes source category. The MACT floor for the category is the sum of the MACT floor components for each type of emission point present at a given affected source. The Viscose Processes source category has fewer than 30 process operations from which to establish existing source MACT floors for these emission points. If there are fewer than 30 sources in a category, the CAA states that the MACT floor for existing affected sources must be determined based on the average emission limitation achieved by the best-performing five sources.

We have previously interpreted the ''average'' emission limitation as either the mean or median emission limitation. Where we had at least five process operations in a group of similar operations to establish a MACT floor (that is, equipment leaks, wastewater emissions, and CS_2 unloading and storage operations), we used the median emission limitation to establish the MACT floor because it corresponds to the control level for an actual control technology. Where we had fewer than five operations in a group of similar operations to establish a MACT floor (that is, process vents), we used another approach, which is discussed below.

For new affected sources, the CAA states that the MACT floor must be determined based on the emission limitation achieved by the best-performing similar source. In each case, we used this approach to determine the new source MACT floor.

1. MACT Floor for Equipment Leaks and Wastewater Emissions

Because none of the ten viscose process operations control CS_2 emissions from equipment leaks or wastewater, the MACT floor for those emission points is no control.

2. MACT Floor for CS_2 Unloading and Storage Operations

Most of the ten viscose process operations have taken steps to control CS_2 emissions from unloading and storage operations by using nitrogen or water displacement to unload the liquid CS_2 from the railcar and using nitrogen or water padding in the head space of the storage vessels. All of these CS_2 control techniques reduce liquid CS_2 contact with air. However, the water

unloading and padding systems result in CS_2-contaminated water being sent to wastewater treatment, thereby generating gaseous CS_2 emissions from wastewater. We have determined that using nitrogen unloading and storage systems reduces CS_2 emissions by at least 85 percent relative to the water unloading and storage systems.

The MACT floor for CS_2 unloading and storage operations at existing affected sources is the median CS_2 emission reduction achieved by the top five viscose process operations. The median viscose process operation has a nitrogen system for both unloading and storage. Therefore, we established the MACT floor for CS_2 unloading and storage operations at 85 percent CS_2 control, which is the calculated control efficiency for nitrogen systems relative to water systems. Because the best-controlled viscose process operation also has a nitrogen system for CS_2 unloading and storage operations, the MACT floor is the same for both new and existing affected sources.

3. MACT Floors for Process Vents

a. *Methodology.* We determined separate components of the viscose process operation MACT floor for each type of process vent used in a viscose process operation (that is, one MACT floor for cellulose food casing, one for rayon, one for cellophane, and one for cellulosic sponge). There are only three viscose process operations that include cellulose food casing process operations, two that include rayon process operations, one that includes cellophane process operation, and four that include cellulosic sponge process operations from which to establish the various process vent components of the MACT floor for viscose process operations. The CAA does not clearly address how to establish the MACT floor for existing affected sources when there are fewer than five process operations to determine the average emission limitation.

For the various viscose process operations (cellulose food casing, rayon, cellophane, and cellulosic sponge), we decided to use the MACT floor approach outlined in the preamble to the proposal for the Generic MACT NESHAP (63 FR 55178, October 14, 1998). According to the preamble to the Generic MACT NESHAP, the smaller the group of similar process operations, the less likely it is that the best control strategies have been implemented for the process operations in that group. Averaging the emission limitations from uncontrolled and well-controlled process operations in a small group would result in a low average emission limitation that is clearly below the emission limitation already demonstrated by at least one process operation in that group. Selecting the average emission limitation also could result in a control level with no corresponding control technology. Selecting the median process operation of the group, which would be uncontrolled, would also have little relevance to the determination of MACT.

As an alternative, the proposal preamble to the Generic MACT NESHAP outlined two basic scenarios where EPA can reasonably infer that the MACT floor requirements for small groups of similar process operations have been satisfied:

> First, when the EPA intends to select a MACT standard that coincides with the level of control achieved by the best-controlled [process operation(s)] in a [group of similar process operations], it is self-evident that the MACT floor has been met, and it is clearly a waste of EPA resources to undertake a separate quantitative MACT floor analysis based, in part, on control levels at the less well-controlled [process operations] * * *. Second, in those instances where the EPA will base its MACT standard for a small [group of similar process operations] (five or fewer [process operations]) on MACT standards previously established for a larger group of demonstrably similar [process operations] in other categories, it is also reasonable to infer MACT floor compliance without the need for a detailed new analysis.

The second scenario under which we would determine MACT floors based on MACT standards previously established for a larger group of similar process operations in other categories is not useful here. We found the cellulose food casing, rayon, cellophane, and cellulosic sponge process operations to be completely different from other industrial process operations in terms of the type and concentration of HAP emitted, gas flow rates, control device applicability, types of emission points, and special concerns regarding the flammability of CS_2 that other industries do not have to consider.

Instead, we selected the first scenario under which we would determine process vent MACT floors based on the emission limitation of the best-performing process operation for each type of viscose process operation (cellulose food casing, rayon, cellophane, and cellulosic sponge). The substantial emissions from viscose process vents (18,900 ton/yr nationwide for ten process operations) demonstrate the need for effective emission control for this emission point. In this case, the emission point is represented by the collection of process vents at each viscose process operation. For example, when we determined the best-performing process operation for rayon process vents, we compared the overall reductions in process vent HAP emissions at the two rayon process operations, and the process operation with the higher overall reduction in process vent HAP emissions was considered to be the best-performing rayon process operation.

We also determined the process vent MACT floors for new affected sources based on the best-performing source for each type of viscose process operation. Consequently, the process vent MACT floors for viscose process operations at existing affected sources are the same as the process vent MACT floors for viscose process operations at new affected sources.

b. *MACT Floor for Cellophane Process Vents.* Because there is only one cellophane process operation, we established the MACT floor for the cellophane production process vents based on the current emission reductions achieved by that process operation. The process operation currently achieves between 85 and 90 percent control of total uncontrolled sulfide emissions (reported as CS_2). The process operation accomplishes these reductions by using a CS_2 recovery system. To take into account any variability, we established the MACT floor for cellophane production process vents at 85 percent control.

We also established the MACT floors for solvent coating process vents and toluene storage vessels at cellophane process operations based on the current emission reductions achieved by the cellophane process operation. The process operation currently achieves between 95 and 100 percent control of uncontrolled toluene emissions from these emission points. The process operation accomplishes these reductions by venting emissions from solvent coating process vents and toluene storage vessels to a solvent recovery system. To take into account any variability, we established the MACT floor for solvent coating process vents and toluene storage vessels at 95 percent control.

c. *MACT Floor for Cellulose Food Casing Process Vents.* Of the three cellulose food casing process operations, we have determined that the best-performing process operation achieves between 25 and 30 percent control of total sulfide emissions (reported as CS_2) from process vents at the MACT floor. The process operation accomplishes part of these sulfide emission reductions by using viscose process changes to reduce the amount of CS_2 added to the process. The process

operation accomplishes the remaining sulfide emission reductions by using caustic scrubbers to capture H_2S emissions, which are generated from by-products of the CS_2 reactions in the viscose process operation. To take into account any variability, we established the MACT floor for cellulose food casing process vents at 25 percent control.

d. *MACT Floor for Rayon Process Vents.* Of the two rayon process operations, we have determined that the best-performing process operation achieves between 55 and 60 percent control of total sulfide emissions reported as CS_2. The process operation accomplishes these reductions by using a new rayon spinning technology, CS_2 recovery operations (using condensers and oil absorbers), and caustic scrubbers (to capture the H_2S generated from CS_2). To take into account any variability, we established the MACT floor for rayon process vents at 55 percent control.

e. *MACT Floor for Cellulosic Sponge Process Vents.* Of the four cellulosic sponge process operations, we have determined that the two best-performing process operations achieve similar CS_2 reductions from process vents, between 75 and 85 percent overall. One of these two process operations reduces CS_2 emissions by using a biofilter to remove the CS_2 emissions from its sponge-making operations. The second process operation reduces CS_2 emissions by using a carbon adsorber to recover the CS_2 from the viscose production and regeneration operations and by using a thermal oxidizer to destroy the CS_2 and H_2S from the salt recovery operation. To take into account any variability, we established the MACT floor for cellulosic sponge process vents at the lower end of the range, that is, 75 percent control.

4. Beyond-the-Floor Technology

The CAA states that MACT must be no less stringent than the MACT floor. Therefore, we also evaluate options more stringent than the MACT floor. When evaluating the more stringent options, we consider the costs, non-air quality health and environmental impacts, and energy requirements that accompany the expected emission reductions.

a. *Beyond-the-floor Technology for CS_2 Unloading and Storage Operations.* We did not consider any beyond-the-floor requirements for CS_2 unloading and storage operations at new or existing affected sources because no beyond-the-floor technologies are available for that emission point.

b. *Beyond-the-Floor Technology for Equipment Leaks and Wastewater Emissions.* We do not project any emission control beyond the MACT floor for equipment leaks and wastewater emissions at new or existing affected sources to be cost effective.

In order to control HAP emissions from equipment leaks, viscose process operations would be required to implement an LDAR program similar to the LDAR provisions in subpart H of 40 CFR part 63. However, the baseline HAP emissions from equipment leaks at viscose process operations account for less than 2 percent of total HAP emissions. Therefore, we do not project that any reduction in HAP emissions from equipment leaks would be worth the cost to implement the LDAR program.

In order to control HAP emissions from wastewater, viscose process operations would be required to implement requirements similar to the process wastewater provisions in subpart G of 40 CFR part 63. However, the baseline HAP emissions from wastewater at viscose process operations account for less than 5 percent of total HAP emissions. Therefore, we do not project that any reduction in HAP emissions from wastewater would be worth the cost to implement requirements similar to those in subpart G.

c. *Beyond-the-Floor Technology for Cellophane and Cellulosic Sponge Process Vents.* We did not consider any beyond-the-floor requirements for cellophane process vents and cellulosic sponge process vents at new or existing affected sources because no beyond-the-floor technologies are available for those emission points.

d. *Beyond-the-Floor Technology for Cellulose Food Casing Process Vents.* We are including beyond-the-floor requirements for process vents in today's proposed rule for cellulose food casing operations at new viscose process affected sources. The arguments supporting the beyond-the-floor requirements are presented below.

None of the existing cellulose food casing operations has achieved CS_2 emission reductions from process vents significantly greater than the MACT floor level, which is 25 percent control of total sulfide emissions (reported as CS_2). However, other viscose process operations (such as, rayon and cellulosic sponge) have achieved higher CS_2 emission reductions using various CS_2 control technologies (such as condensers, biofilters, and carbon adsorbers). Because of similarities in process vents among the various viscose process operations, we believe that cellulose food casing operations are also capable of reducing the CS_2 emissions from their process vents.

We have reviewed information obtained from cellulose food casing operations on CS_2 concentrations and gas flow rates for individual process machines. Based on this information, we found that the emission streams from the stack at cellulose food casing operations have relatively low CS_2 concentrations and high air flows. The stack CS_2 concentrations are typically around 100 parts per million (ppm), and the stack gas flow rates typically exceed 80,000 cubic feet per minute (cfm). We have determined that the cost to control these streams at stack conditions would be excessive. However, we also have determined that, if more concentrated emission streams from further back in the cellulose food casing process are segregated from the less concentrated emission streams and sent to a control device, then CS_2 control technologies could be applied to the cellulose food casing operations more cost effectively.

Two of the four cellulosic sponge operations have achieved total sulfide emission reductions of at least 75 percent for the sum of their process vents by using either a carbon adsorber or a biofilter. We have determined that applying one of these CS_2 control technologies (such as a carbon adsorber) to cellulose food casing process vents at new viscose process affected sources to achieve 75 percent control would be cost effective, with minimal non-air quality environmental and energy impacts. Therefore, we are including a beyond-the-floor control requirement of 75 percent total sulfide control for cellulose food casing process vents at new viscose process affected sources in today's proposed rule.

The cost effectiveness of applying carbon adsorbers to the three existing cellulose food casing process operations to achieve 75 percent control ranges from $500 to $1,600 per ton of total sulfide (reported as CS_2). The incremental cost effectiveness between the MACT floor requirement of 25 percent control and the beyond-the-floor requirement of 75 percent control ranges from $500 to $700 per ton of total sulfide (reported as CS_2). The low incremental cost effectiveness is based primarily on the larger emission reductions achieved beyond the floor. The high capital costs for this control technology ($3.9 to $5.8 million) and the economic status of the industry are the primary factors in our rejecting beyond-the-floor requirements for cellulose food casing operations at existing viscose process affected sources. However, we project that capital costs and cost effectiveness for this control technology will be lower for cellulose food casing operations at new

viscose process affected sources. The costs for the existing affected sources include retrofit costs which increased the capital costs by 50 percent. Retrofit costs will not be a factor for cellulose food casing operations at new viscose process affected sources.

The non-air quality impacts and energy requirements for cellulose food casing operations at new viscose process affected sources are expected to be comparable to those determined for operations at existing viscose process affected sources which are minimal. The energy requirements for applying carbon adsorbers to the three existing cellulose food casing operations range from 2,800 to 4,600 megawatt-hours per year (MWh/yr), and the wastewater impacts range from 15 to 35 million gallons per year (gal/yr).

e. *Beyond-the-Floor Technology for Rayon Process Vents.* We are including beyond-the-floor requirements for process vents in today's proposed rule for rayon operations at new viscose process affected sources. The arguments supporting the beyond-the-floor requirements are presented below.

One of the rayon operations has indicated that an emission control technology (fluidized-bed carbon adsorber) is available to increase their CS_2 emission reductions from 60 to 80 percent. This emission control technology is similar to technology currently being used at one of the cellulosic sponge process operations, which is achieving CS_2 emission reductions of 75 percent for the sum of its process vents using a carbon adsorber. We have determined that applying this CS_2 control technology to rayon operations at new viscose process affected sources will be cost effective, with minimal non-air quality environmental and energy impacts. Therefore, we are including a beyond-the-floor control requirement of 75 percent total sulfide control for rayon process vents at new viscose process affected sources in today's proposed rule.

The cost effectiveness of applying carbon adsorbers to the two existing rayon process operations ranges from $600 to $1,300 per ton of total sulfide (reported as CS_2). The incremental cost effectiveness between the MACT floor requirement of 55 percent control and the beyond-the-floor requirement of 75 percent control ranges from $500 to $1,300 per ton of total sulfide (reported as CS_2). The low incremental cost effectiveness is based primarily on the larger emission reductions achieved beyond the floor. The high capital cost for this control technology ($15.2 to $21.8 million) and the economic status of the industry are the primary factors in our rejecting beyond-the-floor requirements for rayon operations at existing viscose process affected sources. However, we project that capital costs and cost effectiveness for these control technologies will be lower for rayon operations at new viscose process affected sources. The costs for the existing affected sources include retrofit costs which increased the capital costs by 50 percent. Retrofit costs will not be a factor for rayon operations at new viscose process affected sources.

The non-air quality impacts and energy requirements for a rayon operation at a new viscose process affected source are expected to be comparable to those determined for operations at existing viscose process affected sources which are minimal. The energy requirements for applying carbon adsorbers to the two existing rayon operations range from 7,600 to 20,000 MWh/yr, and the wastewater impacts range from 57 to 165 million gal/yr.

E. How did we determine the basis and level of the proposed standards for the Cellulose Ethers source category?

There are four cellulose ether plants that are major sources subject to today's proposed rule. These four cellulose ether plants are comprised of seven individual process operations. One cellulose ether plant has three cellulose ether operations (hydroxyethyl cellulose, hydroxypropyl cellulose, and carboxymethyl cellulose operations). Another cellulose ether plant has two cellulose ether operations (methyl cellulose and hydroxypropyl methyl cellulose operations). A third cellulose ether plant has a hydroxypropyl methyl cellulose operation, and a fourth cellulose ether plant has a hydroxyethyl cellulose operation.

We established the MACT floor for storage vessels, equipment leaks, wastewater emissions, and process vents based on these seven cellulose ether operations. Therefore, we used the MACT floor approach presented in section I.B and determined the MACT floor for existing affected sources based on the average emission limitation achieved by the best-performing five cellulose ether operations. We established the MACT floor using the median as the ''average'' emission limitation because the median corresponds to the control level for an actual control technology.

1. MACT Floor for Storage Vessels

Because none of the seven cellulose ether operations have controlled storage vessels in the size range of those controlled under other rules, the MACT floor for storage vessels at both new and existing affected sources is no control.

2. MACT Floor for Equipment Leaks

Only two of the seven cellulose ether operations are currently subject to any LDAR requirements. Therefore, the median control level (that is, MACT floor) for equipment leaks for existing affected sources is no control. The equipment leak provisions for one of the cellulose ether operations are essentially the same as the equipment leak provisions in subpart H of 40 CFR part 63, with some minor differences. Therefore, for new affected sources, we established subpart H provisions as the MACT floor for equipment leaks.

3. MACT Floor for Wastewater Emissions

Information is available on wastewater HAP emissions and wastewater treatment for five of the seven cellulose ether operations. Methanol is the only HAP in the wastewater for four of the five cellulose ether operations, and isophorone is the only HAP for the fifth cellulose ether operation. Five of those cellulose ether operations treat the wastewater in either onsite or offsite biological treatment units.

The industry has reported that these biological treatment units achieve methanol reductions ranging from 95 to 99 percent, but no data are currently available to confirm these reductions. There are also no data on any isophorone reductions; however, isophorone also may be easily biodegraded. The process wastewater provisions in subpart G of 40 CFR part 63 require only a 31 percent reduction in methanol and a 60 percent reduction in isophorone from Group 1 wastewater streams. Even in an open biological system (perhaps with an open collection system), it should be possible to easily achieve these biodegradation levels. Also, according to the analysis for the Hazardous Organic NESHAP (HON), these two compounds would not readily volatilize from the wastewater before they had a chance to be biodegraded.

Because the top five cellulose ether operations all treat wastewater in a manner at least as stringent as the process wastewater provisions in subpart G of 40 CFR part 63, we established those provisions as the MACT floor for existing affected sources. We established the MACT floor for new affected sources to be the same as for existing affected sources because insufficient information is available to confirm a specific control level better than the HON.

4. MACT Floor for Process Vents

Of the seven cellulose ether operations, five operations have process vents. The remaining two cellulose ether operations have closed-loop systems with no process vent HAP emissions. In our MACT floor determination for process vents at cellulose ether operations, we considered the five operations with process vents.

We established the MACT floor for process vents based on the median emission limitation achieved by the five cellulose ether operations with process vent HAP emissions. For those five cellulose ether operations, the median control level (that is, MACT floor) is 99 percent for existing affected sources. This control level is characteristic of incinerators, condensers, and scrubbers currently used by these process operations to recover and control their HAP emissions. The best-performing cellulose ether operation process vent is also controlled to 99 percent; therefore, we established a MACT floor of 99 percent for new affected sources. For cellulose ether operations with closed-loop systems, the MACT floor is the emission control achieved by use of a closed-loop system.

5. Beyond-the-Floor Technology

We evaluate options more stringent than the MACT floor by considering the costs, non-air quality health and environmental impacts, and energy requirements that accompany the expected emission reductions.

a. *Beyond-the-Floor Technology for Storage Vessels.* We did not consider any beyond-the-floor requirements for storage vessels at new or existing affected sources because we do not project any emission control beyond the MACT floor to be cost effective. In order to control HAP emissions from storage vessels, cellulose ether operations would be required to implement requirements similar to the storage vessel provisions in subpart G of 40 CFR part 63. However, the baseline HAP emissions from storage vessels at cellulose ether operations account for less than 0.2 percent of total HAP emissions. Therefore, we do not project that any reductions in HAP emissions from storage vessels would be worth the cost to implement requirements similar to those in subpart G.

b. *Beyond-the-Floor Technology for Wastewater Emissions and Process Vents.* We did not consider any beyond-the-floor requirements for wastewater emissions and process vents at new or existing affected sources because no beyond-the-floor technologies are available for those emission points.

c. *Beyond-the-Floor Technology for Equipment Leaks.* Two of the seven cellulose ether operations are currently subject to LDAR requirements for their equipment leaks. The equipment leak provisions for one of the cellulose ether processes are essentially the same as the equipment leak provisions in subpart H of 40 CFR part 63, with some minor differences. Therefore, we considered subpart H provisions as beyond-the-floor requirements for equipment leaks at existing cellulose ether affected sources. We are including this beyond-the-floor requirement for existing cellulose ether affected sources in today's proposed rule based on the conclusion that the benefits of additional control beyond the MACT floor justify the additional cost.

The cost effectiveness of implementing the equipment leak provisions in subpart H of 40 CFR part 63 ranges from $400 to $600 per ton of HAP for the five cellulose ether operations that do not currently have LDAR programs. The capital and annual costs are also low, with the capital costs ranging from $10,800 to $21,600, and the annual costs ranging from $17,200 to $95,900. there are no non-air quality impacts and energy requirements associated with these beyond-the-floor requirements.

F. How did we select the form of the standards?

We evaluated the feasibility of the following forms of the standards for the Viscose Processes source category and the Cellulose Ethers source category: (1) emission limits (such as mass rate, percent reduction, and concentration emission limits); and (2) work practice standards (such as design, equipment, work practices, and operational standards).

1. Standard Forms Selected

Based on the evaluations presented in the following section, we are specifying a percent reduction emission limit for MACT standards for viscose process vents, cellulose ether process vents, and toluene storage vessels in today's proposed rule.

We are providing some flexibility for complying with the emission limits and work practice standards for CS_2 unloading and storage operations. We are providing the owners and operators of viscose process affected sources with three options for compliance. The first compliance option (a percent reduction emission limit) specifies that owners and operators may achieve an 83 percent reduction in CS_2 emissions from their CS_2 unloading and storage operations using any compliance method. The second compliance option (an alternative equivalent equipment standard) specifies that owners and operators may install a nitrogen system for their CS_2 unloading and storage operations. The third compliance option (an alternative equivalent percent reduction emission limit) specifies that owners and operators may achieve an equivalent emission reduction from elsewhere in the viscose process.

The third compliance option provides flexibility to owners and operators to control other emission points instead of the CS_2 unloading and storage operations, as long as they can demonstrate that they have achieved an equivalent CS_2 emission reduction. The equivalent of the 85 percent reduction in CS_2 emissions from the CS_2 unloading and storage operation is a 0.14 percent reduction in total sulfide emissions from process vents. The 0.14 percent reduction in process vent emissions is based on the percent reduction in storage vessel throughput to the process when a water system is replaced with a nitrogen system for CS_2 unloading and storage.

We are specifying work practice standards for equipment leaks and wastewater emissions at cellulose either affected sources. For equipment leaks, owners and operators of new and existing cellulose ether affected sources must comply with the LDAR work practice standards in subpart H of 40 CFR part 63. Section 112(h) of the CAA recognizes the need for alternative forms of the standard such as a work practice standard. As described in the preamble to the HON (57 FR 62608), the use of a work practice standard for equipment leaks is justified. We are also evaluating the LDAR work practice standards in the proposed Consolidated Air Rule (if owners and operators can demonstrate that they are below a certain number of leaks) and may allow owners and operators the option of complying with those provisions. For wastewater emissions, we are specifying emission limits and work practice standards based on the process wastewater provisions in subpart G of 40 CFR part 63.

2. Standard Forms Evaluated

The following sections present the evaluations used to determine the form of the MACT standards for today's proposed rule.

a. *Mass Rate Emission Limit.* A mass rate emission limit would be based on information that owners and operators of cellulose ether operations and viscose process operations consider CBI (such

as, amount of final product produced, amount of HAP used, and amount of cellulose used). Considering the small size of the groups used to determine the MACT floors for viscose process vents and cellulose ether process vents, we determined that specifying this type of emission limit could reveal confidential information. Therefore, we rejected this type of emission limit for today's proposed rule.

b. *Percent Reduction Emission Limit.* A percent reduction emission limit is the most common type of emission limit for emission points such as process vents, storage vessels, and wastewater emissions. The percent reduction is calculated as a reduction in uncontrolled HAP emissions.

For process vents at viscose process affected sources, we selected an emission limit based on percent reduction of total sulfide emissions from initial CS_2 usage. This type of emission limit provides owners and operators of viscose process affected sources with the flexibility of take credit for controlling emissions of non-HAP sulfides, implementing process changes that reduce CS_2 usage and recovering and reusing CS_2. Total sulfide emissions (CS_2, H_2S, and COS) would be reported as CS_2. Owners and operators of viscose process affected sources would use the information from the material balance required in today's proposed rule to take into account any sulfides that are uncontrolled, lost to wastewater, etc., and then determine the percent reduction for viscose process vents.

For process vents at cellulose ether affected sources, we also selected an emission limit based on percent reduction of total HAP emissions from initial HAP usage. This type of emission limit provides owners and operators of cellulose ether affected sources with the flexibility to take credit for implementing process changes that reduce HAP usage and recovering and reusing HAP. Similar to viscose process affected sources, owners and operators of cellulose ether affected sources would use the information from the material balance required in today's proposed rule to take into account any HAP that are uncontrolled, lost to wastewater, etc., and then determine the percent reduction for cellulose ether process vents.

c. *Concentration Emission Limit.* We considered a concentration emission limit (such as ppm) as an alternative to a percent reduction emission limit for process vents. For example, if concentrations prior to a control device are already low, then a 90 percent reduction may not be feasible. In such instances, an alternative concentration emission limit at the control device outlet (such as, 20 ppm) could be effective.

However, at viscose process operations, stack concentrations of CS_2 are fairly low because the vent stream is diluted. In order to comply with OSHA limits for worker exposure to CS_2, the ventilation systems associated with viscose process operations are designed to produce large volumes of process and building exhaust air, which reduce the concentration of CS_2 emission limit, then viscose process operations may be able to reduce their CS_2 concentrations by simply increasing the air flow (for example, by installing more powerful fans), which would not achieve any actual reduction in CS_2 emissions. Therefore, we rejected specifying an alternative CS_2 concentration emission limit for viscose process affected sources.

For cellulose ether affected sources, we also rejected specifying an alternative HAP concentration emission limit. Based on available HAP emissions data for cellulose ether operations, concentrations prior to the control device are fairly high, so an alternative HAP concentration emission limit is not necessary.

d. *Equipment Standard.* We are providing owners and operators of viscose process affected sources with the option to comply with an equipment standard as an alternative to the 83 percent reduction emission limit for CS_2 unloading and storage operations. Under this equipment standard, owners and operators may install a nitrogen system for unloading and storing their CS_2. This equipment standard is equivalent to the 83 percent reduction emission limit because the nitrogen system has been demonstrated to achieve an 85 percent reduction in CS_2 emissions relative to water systems.

For process vents at viscose process affected sources, an equipment standard would be restrictive, given the range of CS_2 control technologies available (such as, biofilters, carbon adsorbers, oil absorbers, and condensers). An emission limit (such as, percent reduction) would provide owners and operators with the flexibility to try different approaches to meeting the MACT standard.

e. *Work Practice Standard.* For equipment leaks (such as, from valves, flanges, and connectors), an LDAR work practice standard is the most common type of standard. In today's proposed rule, we are requiring owners and operators of new and existing cellulose ether affected sources to determine the frequency of monitoring for their equipment components and a schedule of repair. We are requiring owners and operators to comply with the LDAR standards of subpart H of 40 CFR part 63. We are evaluating the LDAR standards of the proposed Consolidated Air Rule and may allow that as an alternative in the final rule. The proposed Consolidated Air Rule allows less frequent monitoring and repair (compared to the HON) if owners and operators can demonstrate that they are below a certain number of leaks.

For wastewater emissions, we are specifying emission limits and work practice standards based on the process wastewater provisions in subpart G of 40 CFR part 63.

G. How did we select the alternative standards?

We evaluated pollution prevention standards as an alternative to the emission limits and work practice standards. Based on the evaluations presented below, we decided to reject the pollution prevention alternative standards for today's proposed rule.

One cellulose ether operation reduces HAP emissions by extending the reaction time beyond the point of profitability in a technique called ''extended cookout'' or ECO. By using up most of the HAP raw material in the reaction, this pollution prevention technique leaves less unreacted HAP to be emitted downstream. However, insufficient information is available to determine if this technique can achieve the emission reductions necessary to meet MACT floor requirements.

One cellulose food casing operation has developed a non-viscose process that emits no HAP (that is, no CS_2) and expects to reduce total air emissions by about 99 percent. However, the non-viscose process will not be available prior to proposal and promulgation and has not yet been proven to be an effective alternative process. Also, none of the other viscose process operations (rayon, cellophane, cellulosic sponge) have a non-HAP alternative process for their operations. Therefore, this type of standard may not be feasible for those process operations.

Each of the cellulose food casing operations has implemented process changes to reduce the amount of CS_2 added to the viscose process. However, the owners and operators of these cellulose food casing operations have declared the details of these process changes to be confidential, making a pollution prevention standard based on reduction of CS_2 usage infeasible.

H. How did we select the standards for the Viscose Processes source category?

We selected the proposed standards for the Viscose Processes source category based on our assessment of the cost of achieving the MACT floor and beyond-the-floor control options developed for the source category and any non-air quality health and environmental impacts and energy requirements.

1. Standards for Existing Viscose Process Affected Sources

For existing viscose process affected sources, we selected the MACT floor control options for process vents, CS_2 unloading and storage operations, and toluene storage vessels as the standards for those emission points. We chose not to select any beyond-the-floor options as standards for existing viscose process affected sources. The additional cost of control beyond the floor was not reasonable.

The only beyond-the-floor options we considered were 75 percent control of total sulfide emissions of cellulose food casing process vents and 75 percent control of total sulfide emissions for rayon process vents. For process vents at existing cellulose food casing operations, we determined that the incremental cost effectiveness of going beyond the floor would range from $500 to $700 per tone of total sulfide (reported as CS_2). The low incremental cost effectiveness is based primarily on the larger emission reductions achieved beyond the floor. The high capital costs ($3.9 to $5.8 million) to install control technology capable of achieving 75 percent control beyond the floor and the economic status of the cellulose food casing industry are the primary factors in our rejecting beyond-the-floor requirements for cellulose food casing operations at existing viscose process affected sources.

For process vents at existing rayon operations, we determined that the incremental cost effectiveness of going beyond the floor would range from $500 to $1,300 per ton of total sulfide (reported as CS_2). The low incremental cost effectiveness is based primarily on the larger emission reductions achieved beyond the floor. The high capital costs ($15.3 to $21.8 million) to install control technology capable of achieving 75 percent control beyond the floor and the economic status of the rayon industry are the primary factors in our rejecting beyond-the-floor requirements for rayon operations at existing rayon process affected sources.

2. Standards for New Viscose Process Affected Sources

For new viscose process affected sources, we selected the MACT floor control options for CS_2 unloading and storage operations, toluene storage vessels, cellophane process vents, and cellulosic sponge process vents as the standards for those emission points. We also selected the beyond-the-floor control options for cellulose food casing process vents and rayon process vents (that is, 75 percent control of total sulfide emissions) as the standards for those emission points. We believe that the cost of additional controls beyond the MACT floor for new viscose process affected sources is reasonable.

As noted in the previous section, we rejected beyond-the-floor control options for cellulose food casing process vents and rayon process vents for existing viscose process affected sources because of the high capital costs and economic status of the respective industries. However, we project that capital costs will be lower for cellulose food casing operations at new viscose process affected sources. The control technology costs for the existing operations include retrofit costs which increased the capital costs by 50 percent. Retrofit costs will not be a factor for cellulose food casing operations and rayon operations at new viscose process affected sources.

Also, the non-air quality impacts and energy requirements for cellulose food casing operations and rayon operations at new viscose process affected sources are expected to be minimal. We project that the non-air quality impacts and energy requirements for new viscose process affected sources will be comparable to those determined for existing viscose process affected sources. The energy requirements necessary to achieve control of total sulfide emissions beyond the MACT floor range for 2,800 to 4,600 MWh/yr for the three existing cellulose food casing operations and from 7,600 to 20,000 MWh/yr for the two existing rayon operations. The wastewater impacts range from 15 to 35 million gal/yr for the three existing cellulose food casing operations and from 57 to 165 million gal/yr for the two existing rayon operations.

I. How did we select the standards for the Cellulose Ethers source category?

We selected the proposed standards for the Cellulose Ethers source category based on our assessment of the cost of achieving the MACT floor and beyond-the-floor control options developed for the source category and any non-air quality and environmental impacts and energy requirements.

1. Standards for Existing Cellulose Ethers Affected Sources

For existing cellulose ether affected sources, we selected the MACT floor control options for process vents and wastewater emissions as the standards for those emission points. We also selected the beyond-the-floor control option for equipment leaks as the standard for that emission point. We believe that the cost of additional controls beyond the MACT floor for existing cellulose ether affected sources is reasonable.

The cost effectiveness of implementing the equipment leak provisions in subpart H of the HON ranges from $400 to $600 per tone of HAP for the five cellulose ether operations that do not currently have LDAR program. The capital and annual costs are also low, with the capital costs ranging from $10,800 to $21,600, and the annual costs ranging from $17,200 to $95,900. There are no non-air quality impacts and energy requirements associated with this beyond-the-floor requirement.

2. Standards for New Cellulose Ether Affected Sources

For new cellulose ether affected sources, we selected the MACT floor control options for process vents, wastewater emissions, and equipment leaks as the standards for those emission points. There are no beyond-the-floor control options for new cellulose ether affected sources.

J. How did we select the testing and initial compliance requirements?

We selected the testing and initial compliance requirements based on a combination of the generic testing requirements in the NESHAP General Provisions (40 CFR part 63, subpart A) and specific testing requirements for the Viscose Process and Cellulose Ethers source categories.

1. Initial Performance Test Requirements

We are requiring owners and operators of all affected sources to conduct an initial performance test to demonstrate initial compliance with the applicable emission limits. As specified in § 63.7(e)(3) of subpart A, the owners and operators would conduct three separate test runs for each performance test and use the arithmetic mean of the results of the three runs to determine compliance. As specified in § 63.7(e)(1) of subpart A, each test run must last at least 1 hour. The owners and operators

would establish 3-hour averages for each performance test based on the arithmetic means of the three, 1-hour test runs.

We structured the performance test requirements for continuous operations to account for representative conditions. The owners and operators would conduct testing of emissions from continuous process vents at representative conditions, as defined in § 63.1257(b)(7) of the Pharmaceutical Products NESHAP (subpart GGG of 40 CFR part 63).

We structured the performance test requirements for batch operations to account for the worst-case conditions. We adopted this approach for batch operations because they are cyclical and, therefore, tend to have variable emissions. The owners and operators would conduct testing of emissions from batch process vents at either absolute or hypothetical worst-case conditions, as defined in § 63.1257(b)(8) of the Pharmaceutical Products NESHAP (subpart GGG of 40 CFR part 63).

In order for owners and operators of affected sources to demonstrate initial compliance with the applicable emissions limit for their process vents, we are requiring them to test their process vent emissions at the inlet and outlet to the control device and at the stack. The owners and operators would use the applicable equations in today's proposed rule to determine the percent reduction in emissions. The average emissions measured during the 3-hour performance test must be reduced by the applicable amount in the emission limit.

2. EPA Test Methods

As specified in § 63.7(e)(2) of subpart A, we are requiring that the performance tests be conducted using specified EPA test methods. Owners and operators of cellulose food casing, rayon, cellophane, and cellulosic sponge operations at new and existing viscose process affected sources would use EPA Method 15, ''Determination of Hydrogen Sulfide, Carbonyl Sulfide, and Carbon Disulfide Emissions from Stationary Sources'' (40 CFR part 60, appendix A), to measure the sulfide emissions from their process vents. The EPA Method 15 is the predominant test method used for measuring emissions of the sulfides CS_2, H_2S, and COS from stationary sources. The EPA Method 15 has been used in previous emission tests to measure sulfide emissions at a cellulose food casing process operation and a cellulosic sponge process operation.

Except as specified below, owners and operators of cellulose ether operations at new and existing cellulose ether affected sources would use EPA Method 18, ''Measurement of Gaseous Organic Compound Emissions by Gas Chromatography'' (40 CFR part 60, appendix A), to measure the emissions of organic HAP such as ethylene oxide, methanol, methyl chloride, and propylene oxide from their process vents. Owners and operators would use Method 25, ''Determination of Total Gaseous Nonmethane Organic Emissions as Carbon'' (40 CFR part 60, appendix A), to determine the destruction efficiency of thermal oxidizers for organic compounds. Owners and operators may use Method 25A, ''Determination of Total Gaseous Organic Concentration using a Flame Ionization Analyzer'' (40 CFR part 60, appendix A), under the following conditions: (1) an exhaust gas volatile organic matter concentration of 50 ppmv or less is required in order to comply with the emission limit, or (2) the volatile organic matter concentration at the inlet to the control device and the required level of control are such as to result in exhaust volatile organic matter concentrations of 50 ppmv or less; or (3) because of the high efficiency of the control device, the anticipated volatile organic matter concentration at the control device exhaust is 50 ppmv or less, regardless of the inlet concentration.

Owners and operators of cellophane operations at new and existing viscose process affected sources would use EPA Method 18 to measure emissions of toluence from their solvent coating process vents and toluene storage vessels. The EPA Method 18 is the predominant test method used for measuring emissions of speciated gaseous organics.

3. Material Balance

In order for owners and operators of viscose process affected sources to demonstrate continuous compliance with the applicable percent reduction standard, they must be able to calculate the percent reduction of emissions on an ongoing basis after the initial performance test. Therefore, as an additional initial compliance requirement, the owners and operators must also prepare a material balance that includes information on HAP usage and HAP emissions. The material balance would be based on information from the initial performance test and from records at the affected source. If the owners and operators use pollution prevention process changes to comply with the emission limits, then the material balance must include information on the amount of HAP that would have been used in the absence of the process change and the amount of HAP that was used after the process change was implemented. By recording this information, the owners and operators would be able to determine the percent reduction from implementing the process change. The owners and operators would use the applicable equation in today's proposed rule to determine the percent reduction from process changes and any other emission controls.

4. Determination of Operating Limits

In order to establish the operating limits used to demonstrate continuous compliance, the owners and operators of affected sources must install the monitoring equipment used to establish these limits. Because the operating limits will be established during the initial performance test, the owners and operators must install the monitoring equipment prior to the initial performance test. We selected operating parameters for each control device that are reliable indicators of control device performance. See section III.K.1 for further information on the selection of the operating parameters.

To establish site-specific operating limits for condensers, thermal oxidizers, water scrubbers, caustic scrubbers, biofilters, and oil absorbers, the owners and operators must record the applicable operating parameters averaged over the same period as the performance test while the vent stream is routed and constituted normally. For flares, the owners and operators must comply with the requirements in § 63.11 of subpart A to establish site-specific operating limits. For carbon absorbers, the owners and operators must record the applicable operating parameters for each carbon bed regeneration cycle during the period of the performance test. In each case, the owners and operators must locate the monitoring sensors in positions that provide representative parameter values.

5. Initial Compliance Requirements for CS_2 Unloading and Storage Operations

Owners and operators of new and existing cellulose food casing, rayon, cellophane, and cellulosic sponge affected sources would have three options for demonstrating initial compliance with the emission limits and work practice standards for CS_2 unloading and storage operations. If the owners and operators choose to reduce the CS_2 emissions from their CS_2 unloading and storage operations by 83 percent by any compliance method, they must have a record documenting how they met the 83 percent emission limit. If they met the 83 percent

emission limit by installing a nitrogen system, they would calculate the actual percent reduction achieved using the applicable equation in today's proposed rule. If they met the 83 percent emission limit by venting emissions to a control device, then they must conduct an initial performance test to demonstrate the actual percent reduction achieved, prepare a material balance based on information from the test and from records at the affected source, and establish the appropriate control device operating parameters during the test. Owners and operators would calculate the percent reduction of emissions measured during the performance test using the applicable equation in today's proposed rule.

If the owners and operators decide to reduce their CS_2 emissions by installing a nitrogen system for CS_2 unloading and storage, then they must have a record certifying that a nitrogen system is being used for CS_2 unloading and storage operations. Using a nitrogen system for CS_2 unloading and storage ensures the reduction of CS_2 emissions by at least 83 percent relative to water systems, based on MACT floor calculations.

If the owners and operators decide to obtain an equivalent emission reduction from elsewhere in the viscose process, such as a 0.14 percent reduction from process vents, then they must comply with the initial compliance requirements for process vents, that is, conduct an initial performance test of sulfide emissions, prepare a material balance, and establish the appropriate control device operating parameters during the test. The average total sulfide emissions from the process vents, measured during the 3-hour performance test, must be reduced by the applicable amount (such as 75 percent for cellulosic sponge operations) plus 0.14 percent.

6. Initial Compliance Requirements for Cellulose Ether Operations for Wastewater Emissions

Because cellulose ether operations at new and existing cellulose ether affected sources are subject to the applicable process wastewater provisions of subpart G of 40 CFR part 63, they are also subject to the applicable initial compliance provisions of subpart G for process wastewater. These initial compliance provisions include using EPA Method 305, ''Measurement of Emission Potential of Individual Volatile Organic Compounds in Waste'' (40 CFR part 63, appendix A), which is one test method mentioned under subpart G for concentration measurements of process wastewater.

7. Initial Compliance Requirements for Cellulose Ether Operations for Equipment Leaks

Because cellulose ether operations at new and existing cellulose ether affected cellulose ether affected sources are subject to the applicable equipment leak standards of subpart H of 40 CFR part 63, they are also subject to the applicable initial compliance provisions of subpart H for equipment leaks. These initial compliance provisions include using EPA Method 21, ''Determination of Volatile Organic Compounds Leaks'' (40 CFR part 60, appendix A), which is the predominant test method for determining equipment leaks from process equipment, such as valves, flanges and other connections, pumps and compressors, and pressure relief devices.

K. How did we select the continuous compliance requirements?

We selected the continuous compliance requirements based on a combination of general monitoring requirements in the NESHAP General Provisions (40 CFR part 63, subpart A) and specific monitoring requirements for the Viscose Processes and Cellulose Ethers source categories.

1. Control Device Parameter Monitoring Requirements

As specified in § 63.8(c) of subpart A, the owners and operators of affected sources must record the data from their monitoring systems at least once every 15 minutes. They must have a minimum of three of the four required data points to constitute a valid hour of data. They must also have valid hourly data for at least 66 percent of every averaging period (such as, two valid hourly values for a 3-hour averaging period).

In most cases, owners and operators are required to calculate 3-hour averages of their operating parameter values for the purpose of demonstrating continuous compliance with the emission limit. (for carbon adsorbers, owners and operators are required to monitor operating parameters for each regeneration cycle.) We selected the 3-hour averaging time because the initial performance test provisions in today's proposed rule require owners and operators to perform a minimum of three, 1-hour test runs, and the limits of the established parameter values would be based on the average values obtained using all test data obtained during the performance test. Each 3-hour average parameter value must be within the level established during the initial performance test in order for the owners and operators to demonstrate continuous compliance with the operating limit.

Based on information from operations in the Viscose Processes source category, the Cellulose Ethers source category, and other source categories, we selected operating parameters for each control device that are reliable indicators of control device performance. Owners and operators of affected sources would monitor these operating parameters to demonstrate continuous compliance with the operating limits.

a. *Carbon Adsorbers.* We selected the operating parameters for carbon adsorbers based on monitoring provisions in subpart G of 40 CFR part 63 and in the Pharmaceutical Products NESHAP (subpart GGG of 40 CFR part 63). We are requiring owners and operators of affected sources equipped with carbon adsorbers to monitor and record the following parameters to demonstrate continuous compliance: (1) Total regeneration stream flow during the carbon bed regeneration cycle, (2) the temperature of the carbon bed after regeneration, (3) the temperature of the carbon bed after completing the cooling cycle, and (4) regeneration frequency (operating time since the end of the last regeneration). Inlet temperature and flow can affect the adsorption unit efficiency.

b. *Thermal Oxidizers.* Based on information from subpart G of 40 CFR part 63 and from cellulose ether and cellulosic sponge operations, we are requiring owners and operators of affected sources equipped with thermal oxidizers to monitor the temperature in the firebox or in the ductwork immediately downstream of the firebox. A sufficiently high temperature in the firebox helps to ensure complete combustion.

c. *Biofilters.* We selected the operating parameters for biofilters based on information from a cellulosic sponge operation and a biofilter vendor. We are requiring owners and operators of affected sources equipped with a biofilter to monitor the following parameters to demonstrate continuous compliance: (1) Inlet air flow temperature, (2) inlet air flow rate, (3) amount of water and nutrients added, (4) nutrient levels in the biofilter discharge, (5) pH of the effluent, (6) conductivity of the effluent, and (7) pressure drop on the media. These monitoring parameters have also been recommended by a biofilter vendor.

Monitoring the temperature and gas flow rate at the biofilter inlet can assist the owners and operators in maintaining an optimal inlet temperature and flow. Monitoring the nutrient levels added to

the system and in the biofilter discharge determines whether the microbes in the biofilter bed are receiving enough nutrients; the presence of some excess nutrients is an indication that they are. By measuring the pH and conductivity of the effluent, owners and operators can monitor the buildup of sulfuric acid. The pH decreases and the conductivity of the effluent increases as levels of sulfur and sulfuric acid increase. Monitoring the pressure drop across the system can alert owners and operators to problems in the system that increase the pressure drop (such as fungal growth sealing off the bottom of the biofilter bed).

d. *Condensers.* Based on information from the subpart G of 40 CFR part 63 and from cellulose ether operations, we are requiring owners and operators of affected sources equipped with condensers to monitor the condenser outlet gas temperature. Monitoring the outlet gas temperature helps to ensure proper operation of the condenser.

e. *Oil Absorbers.* No information is readily available on operating parameters for owners and operators of affected sources with oil absorbers. However, several parameters are suggested based on the method of operation of this control device. After the CS_2 vapors from the process are absorbed in an absorption vessel, the absorption liquid is passed to heat exchangers, which increase the temperature of the liquid and enhance the release of the CS_2 from the absorption liquid in a steam stripper. The absorption liquid from the stripper is sent through a heat exchanger to cool and is returned to the absorber. The flow of absorption liquid through the absorber, the stripping and condensation temperatures before and after the steam stripper, and the steam flow are good parameters for ensuring the proper operation of this control device. Consequently, we are requiring owners and operators of affected sources equipped with oil absorbers to monitor these parameters to demonstrate continuous compliance.

f. *Scrubbers.* We selected the operating parameters for packed tower scrubbers based on information from subpart G of 40 CFR part 63, and the Pharmaceutical Products NESHAP (subpart GGG of part 63), cellulose food casing operations, and cellulose ether operations. Owners and operators of affected sources equipped with packet tower scrubbers that use water as the scrubber liquid would monitor scrubber pressure drop and scrubber liquid flow rate to demonstrate continuous compliance. Owners and operators of affected sources equipped with packed tower scrubbers that use caustic scrubber liquid would monitor these two parameters and also scrubber liquid pH. The pressure drop across the packed tower scrubber is an indicator of whether the packing in the scrubber is becoming clogged. Continued flow of scrubber liquid ensures that the scrubber is operating properly. Monitoring the pH of the scrubber liquid ensures that the scrubber liquid is at the optimal pH level for absorbing the target pollutant.

g. *Flares.* The simplest and most effective means of determining whether a flare is operating properly is whether the pilot flame is still burning. Therefore, we are requiring owners and operators of affected sources using flares to monitor the presence of the pilot flame in addition to the other flare operating requirements (such as design specifications, heat content specifications, exit velocity limitation, etc.) specified in §63.11 of subpart A.

2. Material Balance

In order for owners and operators of viscose process affected sources to demonstrate continuous compliance with the applicable percent reduction standard, they must be able to calculate the percent reduction of emissions on an ongoing basis. They would calculate the percent reduction using the emissions data from the material balance that they established as part of their initial compliance requirements. The material balance would include information on HAP usage and HAP emissions based on information from the initial performance test and from records at the affected source. If the owners and operators use pollution prevention process changes to comply with the emission limits, then the material balance would include information on the amount of HAP that would have been used in the absence of the process change, and the amount of HAP that was used after the process change was implemented. By recording this information, the owners and operators would be able to determine the percent reduction from implementing the process change. The owners and operators would use the applicable equation in today's proposed rule to determine the percent reduction from process changes and any other emission controls.

3. Continuous Compliance Requirements for CS_2 Unloading and Storage Operations

Owners and operators of cellulose food casing, rayon, cellophane, and cellulosic sponge at new and existing viscose process affected sources would have three options for demonstrating continuous compliance with the emission limits and work practice standards for CS_2 unloading and storage operations.

If owners and operators choose to reduce the CS_2 emissions from their CS_2 unloading and storage operations by 83 percent by any compliance method, they must keep a record documenting how they are meeting the 83 percent emission limit. If they met the 83 percent emission limit by installing a nitrogen system, they would calculate the actual percent reduction achieved using the applicable equation in today's proposed rule. If they met the 85 percent emission limit by venting emissions to a control device, then they must monitor the appropriate control device operating parameters and meet the appropriate operating limits. They would also calculate the percent reduction of emissions from the material balance using the applicable equation in today's proposed rule.

If owners and operators decide to reduce their CS_2 emissions by installing a nitrogen system for CS_2 unloading and storage, then they must keep the record established as part of their initial compliance requirements certifying that a nitrogen system is being used for CS_2 unloading and storage operations. Using a nitrogen system for CS_2 unloading and storage ensures the reduction of CS_2 emissions by at least 83 percent relative to water systems, based on MACT floor calculations.

If owners and operators of affected sources decide to obtain an equivalent emission reduction from elsewhere in the viscose process, such as a 0.14 percent reduction from process vents, then they must comply with the continuous compliance requirements for process vents. They must monitor and record operating parameters at least once every 15 minutes and calculate 3-hour averages of operating parameter values. Each 3-hour average parameter value must be within the value established during the initial performance test to demonstrate continuous compliance with the operating limit. They must also maintain the material balance that they established as part of their initial compliance requirements and document the percent reduction of total sulfide (reported as CS_2) using the emissions data from the material balance. The average total sulfide emissions from the process vents, based on information from the material balance, must be reduced by the applicable amount (such as 75 percent for cellulosic sponge operations) plus 0.14 percent.

4. Continuous Compliance Requirements for Cellulose Ether Operations for Wastewater Emissions

Because owners and operators of new and existing cellulose ether affected sources are subject to the applicable process wastewater provisions of subpart G of 40 CFR part 63, they are also subject to the applicable continuous compliance provisions of subpart G for process wastewater.

5. Continuous Compliance Requirements for Cellulose Ether Operations for Equipment Leaks

Because owners and operators of new and existing cellulose ether affected sources are subject to the applicable equipment leak standards of subpart H of 40 CFR part 63, they are also subject to the applicable continuous compliance provisions of subpart H for equipment leaks.

L. How did we select the notification, reporting, and recordkeeping requirements?

We selected the notification, recordkeeping, and reporting requirements based on generic requirements in the NESHAP General Provisions (40 CFR part 63, subpart A) and specific requirements for the Viscose Processes and Cellulose Ethers source categories.

1. Notification Requirements

The notification requirements that we selected include initial notifications, notification of performance test, notification of compliance status, and notification dates. These notification requirements are based on requirements in §§ 63.7(b) and (c), 63.8(f), 63.9(b) and (h), and 63.10(d)(2) of subpart A.

2. Reporting Requirements

The reporting requirements that we selected include semiannual compliance reports, required in § 63.10(e)(3) of subpart A, and immediate SSM reports, required in § 63.10(d)(5)(ii) of subpart A. If there were no deviations from the emission limits, operating limits, or work practice standards during the reporting period, then the semiannual compliance report must include a statement that there were no deviations. If there were deviations from the emission limits, operating limits, or work practice standards during the reporting period, then the semiannual compliance report must include the information required in today's proposed rule. If there was a startup, shutdown or malfunction during the reporting period, and the source took actions consistent with the SSM plan, then the compliance report must include the information in § 63.10(d)(5)(i) of subpart A. The submittal date for the compliance report is based on information in § 63.10(e)(3)(v) of subpart A.

If there was a startup, shutdown, or malfunction during the reporting period, and the owner or operator took actions inconsistent with the SSM plan, then the owner or operator must submit an immediate SSM report. The report must include the actions taken for the event and the information provided in § 63.10(d)(5)(ii) of subpart A. The submittal date for the immediate SSM report is based on § 63.10(d)(5)(ii) of subpart A.

3. Recordkeeping Requirements

The recordkeeping requirements that we selected include a copy of each notification and report, as well as documentation supporting any initial notification or notification of compliance status, according to the requirements in § 63.10(b)(1)(xiv) of subpart A. Owners and operators of affected sources must also keep the records in § 63.6(e)(3) of subpart A related to SSM, records of performance tests as required in § 63.7(g)(1) of subpart A, and records for each continuous parameter monitoring system.

The records for the continuous parameter monitoring system would include records of operating limits and parameter monitoring data required in today's proposed rule. Owners and operators of affected sources that installed a nitrogen system to comply with the work practice standard for CS_2 unloading and storage operations must keep records certifying that a nitrogen system is being used. Owners and operators must keep records of all material balances and calculations documenting the percent reduction in HAP emissions used to demonstrate compliance with the emission limits.

M. What is the relationship of this rule to other rules?

This section discusses the relationship between today's proposed rule and other Federal rules covering cellulose products manufacturing operations. We evaluated pertinent rules in an effort to minimize the burden on the industry and enforcement authorities. We are interested in hearing from you on specific suggestions for reducing the overall burden of the rule without jeopardizing its enforceability of our overall emission reduction goals.

1. Carbon Disulfide OSHA PEL

Occupational exposure to CS_2 is regulated by the U.S. Department of Labor, Occupational Safety and Health Administration (OSHA). The current permissible exposure limit (PEL) for CS_2, established by OSHA in 1992, is 20 ppm as an 8-hour time-weighted average (TWA) (29 CFR 1910.1000, subpart Z). The PEL requires operations to reduce average worker exposure to CS_2 at or below 20 ppm during an 8-hour shift of a 40-hour week.

Viscose process operations have reduced worker exposure to CS_2 by designing their ventilation systems to produce large volumes of process and building exhaust air. As a result, viscose process operations have relatively low CS_2 concentrations and high gas flow rates.

Currently, OSHA is evaluating setting a lower PEL for CS_2. Many viscose process operations have indicated that they are currently achieving CS_2 levels at or below 4 ppm, which was the PEL for CS_2 for a short period of time, prior to its being increased to 20 ppm. Therefore, we do not anticipate any OSHA limit at or above 4 ppm will have much impact on industry's compliance with the CS_2 emission reduction requirements in today's proposed rule.

However, an OSHA limit lower than 4 ppm could require some viscose process operations to take additional measures and increase their gas flow rates in order to further reduce the CS_2 concentrations inside the operation. The more dilute flows, the more difficult it becomes for MACT floor viscose process operations, that are currently controlled, to maintain the level of CS_2 control that they currently achieve. Control devices would not be as efficient at removing CS_2 at reduced concentrations. Consequently, the MACT floor would have to be revised downward. Otherwise, the MACT standard would be based on obsolete, incorrect information.

The more dilute flow makes it more difficult for viscose process operations to achieve the level of CS_2 control necessary to meet the MACT floor and increases emission control costs to meet the MACT floor. The resulting higher cost effectiveness beyond the MACT floor would make it more difficult for us to establish beyond-the-floor requirements.

Conversely, a tighter OSHA limit could force some viscose process operations to enclose more of their process in order to reduce the CS_2 concentrations inside the operation. The more concentrated flows resulting from the lower OSHA limit would dovetail with the need for more concentrated flows for the CS_2 control devices used to comply with the MACT standard, whether the standard is set at the MACT

floor or beyond-the-floor. To avoid any conflict in implementing our respective standards, we are working with OSHA to coordinate our efforts in reducing worker exposure to CS_2 and air emissions of CS_2.

2. Polyether Polyols NESHAP

The proposed NESHAP for Polyether Polyols Production (subpart PPP of 40 CFR part 63) (62 FR 46818, September 4, 1997) defined a ''polyether polyol'' as

> . . . a compound formed through the polymerization of ethylene oxide or propylene oxide or other cyclic ethers with compounds having one or more reactive hydrogens (i.e., a hydrogen bonded to nitrogen, oxygen, phosphorus, sulfur, etc.) to form polyethers. This definition, excludes materials regulated under the HON, such as glycols and glycol ethers.

One commenter on the proposed rule noted that the cellulose ether, hydroxyethyl cellulose, is formed through the reaction of ethylene oxide on cellulose polymer molecules. The commenter requested that EPA clarify whether hydroxyethyl cellulose is included or excluded from the definition of ''polyether polyol.'' In response to this comment, the final Polyether Polyol NESHAP (64 FR 29439, June 1, 1999) revised the definition of ''polyether polyol'' to specifically exclude hydroxyethyl cellulose. Therefore, hydroxethyl cellulose operations are not subject to the requirements of subpart PPP of 40 CFR part 63 and are subject to today's proposed subpart.

However, the final Polyether Polyol NESHAP did not specifically exclude any of the other cellulose ether operations (for example, hydroxypropyl cellulose operations and hydroxypropyl methyl cellulose operations) subject to today's proposed rule and which also fall under the definition of a polyether polyol. A revision to the Polyether Polyol NESHAP that specifically excludes all cellulose ether operations was published on May 8, 2000 (65 FR 26491). Once this change becomes effective, cellulose ether operations will only be subject to this subpart.

3. Volatile Organic Liquid Storage Vessels New Source Performance Standards (NSPS)

The NSPS for Volatile Organic Liquid Storage Vessels (40 CFR part 60, subpart Kb) includes requirements for storage vessels constructed, reconstructed, or modified after July 23, 1984 that are used to store volatile organic liquids. The NSPS exempts the following storage vessels: (1) vessels with a design capacity less than 75 cubic meters (m^3), (2) vessels with a capacity greater than or equal to 151 m^3 with a maximum true vapor pressure less than 3.5 kilopascals (kPa), and (3) vessels with a capacity greater than or equal to 75 m^3 but less than 151 m^3 with a maximum true vapor pressure less than 15 kPa.

Today's proposed rule also contains requirements for storage vessels containing volatile organic liquids, specifically HAP storage vessels containing CS_2 or toluene at viscose process affected sources. However, the CS_2 storage vessel standards in today's proposed rule primarily address the gaseous CS_2 emissions being generated from the CS_2-contaminated water from water unloading and padding systems, not the gaseous CS_2 emissions from the storage vessel. Also, only the cellophane operation has toluene storage vessels that would be subject to the storage vessel provisions in subpart Kb and today's proposed rule. Therefore, we project no overlap in requirements between subpart Kb and today's proposed rule for CS_2 storage vessels. The owner or operator will identify in the notification of compliance status which storage vessels are in compliance with subpart Kb.

IV. Summary of Environmental, Energy and Economic Impacts

A. What are the air quality impacts?

We have determined nationwide baseline HAP emissions from operations in the Viscose Processes source category and Cellulose Ethers source category to be 20,700 ton/yr at the current level of control. We have determined that the proposed standards will reduce total HAP emissions from these operations by about 4,060 ton/yr.

In addition to reducing emissions of HAP, the proposed standards will also reduce emissions of non-HAP, such as H_2S. We have determined that the proposed standards will reduce H_2S emissions by about 1,490 ton/yr from a baseline level of 4,440 ton/yr.

We have determined that the proposed standards will increase secondary emissions of particulate matter, sulfur dioxide, nitrogen oxides, and carbon monoxide from industrial and utility boilers by about 23 ton/yr. Secondary emissions were assumed to be generated from the utility boilers that generate the electricity for the control devices as well as from the industrial boilers that generate the steam used in operating the control devices (e.g., carbon adsorbers).

B. What are the cost impacts?

We have determined that the capital costs for emission control equipment for the proposed standards will be $33.0 million, and the capital costs for monitoring equipment will be $251,000. The capitol costs include the costs to purchase and install the equipment.

We have determined that the incremental annual costs for emission control for the proposed standards will be $7.7 million/yr, and the annual costs for monitoring will be $362,000. The annual costs include the direct annual costs (comprised of labor, materials, and utilities) plus the indirect annual costs (comprised of overhead, taxes, insurance, administrative charges, and capital recovery).

We expect that the total average costs for annual recordkeeping and reporting required by the proposed standards will be $2,041 over the first 3 years after implementation of the standards.

C. What are the economic impacts?

With our economic impact analysis, we sought to evaluate the impacts this proposed rule would have on the cellulose manufacturing market, consumers, and society. Because of the variability in end products in cellulose products manufacturing, we assessed impacts on five separate market segments. We treated the Cellulose Ethers source category as one segment and divided the Viscose Processes source category into four segments: cellophane, rayon, food casings, and sponges. The total annualized social cost (in 1998 dollars) of the proposed rule on the industry is $7.7 million, with costs to the firms affected by this proposed rule ranging from 0.2 to 4.5 percent of sales. The cost-to-sales ratios for ethers and cellophane were below 1 percent, suggesting the proposed rule had minimal impact on these segments. Since the cost-to-sales ratios were higher overall for the rayon, food casings, and sponge segments of the cellulose market, we performed a market analysis using 1998 as the baseline. The results indicated less than 1 percent change in market prices and in the quantity of cellulose products produced for these three segments.

We do not predict that cellulose manufacturing facilities will close as a result of this proposed rule. However, available economic data suggest that some facilities in this source category would very likely close if current trends continue—even if they did not incur compliance costs from this proposed rule. The impact of these proposed standards may be that decisions to close facilities may occur sooner than they would otherwise.

D. What are the non-air health, environmental and energy impacts?

We have determined that the overall energy demand (electricity plus steam) for operations in the Viscose Processes source category and Cellulose Ethers source category will increase by about 16,000 MWh/yr under the proposed standards. We determined this net increase based on the additional energy demand for control devices installed to meet the proposed standards. No information for comparison is currently available on the baseline energy consumption for the Viscoe Processes source category and Cellulose Ethers source category.

We have determined that wastewater generation will increase by about 115 million gal/yr from a baseline level of 9,204 million gal/yr with the installation of the control devices. We project that some of the control strategies examined for the proposed standards will generate additional solid waste, primarily from the use of scrubbers. We have no information on the amount of additional solid waste that will be generated, but we anticipate that the amount will be small.

V. Solicitation of Comments and Public Participation

We would like to have full public participation in arriving at our final decisions, and we encourage comment on all aspects of this proposal from all interested parties. Interested parties should submit supporting data and detailed analyses with their comments so we can make maximum use of them. Information on where and when to submit comments is listed in ''Comments'' under the **ADDRESSES** and **DATES** sections. Information on procedures for submitting proprietary information in the comments is listed in ''Comments'' under the **SUPPLEMENTARY INFORMATION** section.

VI. Administrative Requirements

A. Executive Order 12866, Regulatory Planning and Review

Under Executive Order 12866 (58 FR 51735, October 4, 1993), EPA must determine whether the regulatory action is ''significant'' and therefore subject to review by the Office of Management and Budget (OMB) and the requirements of the Executive Order. The Executive Order defines ''significant regulatory action'' as one that is likely to result in a rule that may:

(1) Have an annual effect on the economy of $100 million or more or adversely affect in a material way the economy, a sector of the economy, productivity, competition, jobs, the environment, public health or safety, or state, local, or tribal governments or communities;

(2) Create a serious inconsistency or otherwise interfere with an action taken or planned by another agency;

(3) Materially alter the budgetary impact of entitlements, grants, user fees, or loan programs, or the rights and obligation of recipients thereof; or

(4) Raise novel legal or policy issues arising out of legal mandates, the President's priorities, or the principles set forth in the Executive Order.

Pursuant to the terms of Executive Order 12866, it has been determined that this rule is not a ''significant regulatory action'' because none of the listed criteria apply to this action. Consequently, this action was not submitted to OMB for review under Executive Order 12866.

B. Executive Order 13132, Federalism

Executive Order 13132, entitled ''Federalism'' (64 FR 43255, August 10, 1999) requires EPA to develop an accountable process to ensure ''meaningful and timely input by State and local officials in the development of regulatory policies that have federalism implications.'' ''Policies that have federalism implications'' is defined in the Executive Order to include regulations that have ''substantial direct effects on the States, on the relationship between the national government and the States, or on the distribution of power and responsibilities among the various levels of government.'' Under Executive Order 13132, EPA may not issue a regulation that has federalism implications, that imposes substantial direct compliance costs, and that is not required by statute, unless the Federal government provides the funds necessary to pay the direct compliance costs incurred by State and local governments, or EPA consults with State and local officials early in the process of developing the proposed regulation. The EPA also may not issue a regulation that has federalism implications and that preempts State law unless EPA consults with State and local officials early in the process of developing the proposed regulation.

If EPA complies by consulting, Executive Order 13132 requires EPA to provide to OMB, in a separately identified section of the preamble to the rule, a federalism summary impact statement (FSIS). The FSIS must include a description of the extent of EPA's prior consultation with State and local officials, a summary of the nature of their concerns and EPA's position supporting the need to issue the regulation, and a statement of the extent to which the concerns of State and local officials have been met. Also, when EPA transmits a draft final rule with federalism implications to OMB for review pursuant to Executive Order 12866, it must include a certification from EPA's Federalism Official stating that EPA has met the requirements of Executive Order 13132 in a meaningful and timely manner.

This proposal rule will not have substantial direct effects on the States, on the relationship between the national government and the States, or on the distribution of power and responsibilities among the various levels of government, as specified in Executive Order 13132. Thus, the requirements of section 6 of the Executive Order do not apply to this rule.

C. Executive Order 13084, Consultation and Coordination With Indian Tribal Governments

Under Executive Order 13084, EPA may not issue a regulation that is not required by statute, that significantly or uniquely affects the communities of Indian tribal governments, and that imposes substantial direct compliance costs on those communities, unless the Federal government provides the funds necessary to pay the direct compliance costs incurred by the tribal governments, or EPA consults with those governments. If EPA complies by consulting, Executive Order 13084 requires EPA to provide to OMB, in a separately identified section of the preamble to the rule, a description of the extent of EPA's prior consultation with representatives of affected tribal governments, a summary of the nature of their concerns, and a statement supporting the need to issue the regulation. In addition, Executive Order 13084 requires EPA to develop an effective process permitting elected officials and other representatives of Indian tribal governments ''to provide meaningful and timely input in the development of regulatory policies on matters that significantly or uniquely affect their communities.'' Today's proposed rule does not significantly or uniquely affect the communities of Indian tribal governments. No tribal governments own or operate cellulose food casing operations, rayon operations, cellophane operations, cellulosic sponge operations, or cellulose ether operations. Accordingly, the requirements of section 3(b) of Executive Order 13084 do not apply to this action.

D. Executive Order 13045, Protection of Children From Environmental Health Risks and Safety Risks

Executive Order 13045 (62 FR 19885, April 23, 1997) applies to any rule that: (1) is determined to be ''economically significant'' as defined under Executive Order 12866, and (2) concerns an environmental health or safety risk that EPA has reason to believe may have a disproportionate effect on children. If the regulatory action meets both criteria, EPA must evaluate the environmental health or safety effects of the planned rule on children, and explain why the planned regulation is preferable to other potentially effective and reasonably feasible alternatives that EPA considered.

The EPA interprets Executive Order 13045 as applying only to those regulatory actions that are based on health or safety risks, such that the analysis required under section 5–501 of the Executive Order has the potential to influence the regulation. This rule is not subject to Executive Order 13045 because it is based solely on technology performance. No children's risk analysis was performed because no alternative technologies exist that would provide greater stringency at a reasonable cost. Furthermore, this rule has been determined not to be ''economically significant'' as defined under Executive Order 12866.

E. Unfunded Mandates Reform Act of 1995

Title II of the Unfunded Mandates Reform Act of 1995 (UMRA), Pub. L. 104–4, establishes requirements for Federal agencies to assess the effects of their regulatory actions on State, local, and tribal governments and the private sector. Under section 202 of the UMRA, EPA generally must prepare a written statement, including a cost-benefit analysis, for proposed and final rules with ''Federal mandates'' that may result in expenditures by State, local, and tribal governments, in aggregate, or by the private sector, of $100 million or more in any 1 year. Before promulgating an EPA rule for which a written statement is needed, section 205 of the UMRA generally requires EPA to identify and consider a reasonable number of regulatory alternatives and adopt the least-costly, most cost-effective, or least-burdensome alternative that achieves the objectives of the rule. The provisions of section 205 do not apply when they are inconsistent with applicable law. Moreover, section 205 allows EPA to adopt an alternative other than the least-costly, most cost-effective, or least-burdensome alternative if the Administrator publishes with the final rule an explanation why that alternative was not adopted. Before EPA establishes any regulatory requirements that may significantly or uniquely affect small governments, including tribal governments, it must have developed under section 203 of the UMRA a small government agency plan. The plan must provide for notifying potentially affected small governments, enabling officials of affected small governments to have meaningful and timely input in the development of EPA's regulatory proposals with significant Federal intergovernmental mandates, and informing, educating, and advising small governments on compliance with the regulatory requirements.

The EPA has determined that this proposed rule does not contain a Federal mandate that may result in expenditures of $100 million or more for State, local, and tribal governments, in the aggregate, or the private sector in any 1 year. The maximum total annual cost of this proposed rule for any year has been determined to be less than $9 million. Thus, today's proposed rule is not subject to the requirements of sections 202 and 205 of the UMRA. In addition, EPA has determined that this proposed rule contains no regulatory requirements that might significantly or uniquely affect small governments because it contains no requirements that apply to such governments or impose obligations upon them. Therefore, today's proposed rule is not subject to the requirements of section 203 of the UMRA.

F. Regulatory Flexibility Act (RFA), as Amended by the Small Business Regulatory Enforcement Fairness Act of 1966 (SBREFA), 5 U.S.C. 601 et seq.

The RFA generally requires an agency to prepare a regulatory flexibility analysis of any rule subject to notice and comment rulemaking requirements under the Administrative Procedure Act or any other statute unless the agency certifies that the rule will not have a significant economic impact on a substantial number of small entities. Small entities include small businesses, small organizations, and small governmental jurisdictions.

For purposes of assessing the impacts of today's proposed rule on small entities, small entity is defined as: (1) A small business that has fewer than 1,000 employees for SIC codes 2823, 2819, and 2869; fewer than 750 employees for SIC code 2821; or fewer than 500 employees for SIC code 3089; (2) a small governmental jurisdiction that is a government of a city, county, town, school district or special district with a population of less than 50,000; and (3) a small organization that is any not-for-profit enterprise which is independently owned and operated and is not dominant in its field.

After considering the economic impact of today's proposed rule on small entities, I certify that this action will not have a significant economic impact on a substantial number of small entities. We have determined that only one company meets one of the definitions of small entity—a small business that has fewer than 500 employees for SIC code 3089. This company owns only 1 of the 14 operations subject to today's proposed rule. There are several firms subject to today's proposed rule whose costs will be a greater percentage of sales than this small business. Furthermore, the market impacts on this company are minimal, and are in line with impacts experience by other firms subject to today's proposed rule.

Although this proposed rule will not have a significant economic impact on a substantial number of small entities, EPA nonetheless has tried to reduce the impact of this proposed rule on small entities. We held a number of meetings with industry in which the lone small business participated, and we visited the only small business impacted by this proposed rule. The EPA continues to be interested in the potential impacts of the proposed rule on small entities and welcomes comments on issues related to such impacts.

G. Paperwork Reduction Act

The information collection requirements in this proposed rule will be submitted for approval to the Office of Management and Budget under the Paperwork Reduction Act, 44 U.S.C. 3501 *et seq.* The EPA has prepared an Information Collection Request (ICR) document 1974.01, and you may obtain a copy from Sandy Farmer by mail at Office of Environmental Information, Collection Strategies Division (2822), U.S. Environmental Protection Agency, 1200 Pennsylvania Avenue NW., Washington, DC 20460, by email at farmer.sandy@epa.gov, or by calling (202) 260–2740. You may also download a copy off the Internet at http://www.epa.gov/icr. The information requirements are not effective until OMB approves them.

The information requirements are based on notification, recordkeeping, and reporting requirements in the NESHAP General Provisions (40 CFR part 63, subpart A), which are mandatory for all operators subject to national emission standards. These

recordkeeping and reporting requirements are specifically authorized by section 114 of the CAA (42 U.S.C. 7414). All information submitted to EPA pursuant to the recordkeeping and reporting requirements for which a claim of confidentiality is made is safeguarded according to EPA's policies set forth in 40 CFR part 2, subpart B.

The proposed rule would require maintenance inspections of the control devices but would not require any notifications or reports beyond those required by the NESHAP General Provisions (40 CFR part 63, subpart A). The recordkeeping requirements require only the specific information needed to determine compliance.

The annual recordkeeping and reporting burden for this collection (averaged over the first 3 years after the effective date of the rule) has been determined to be 42 labor hours per year, at a total annual cost of $2,041. This burden number includes one-time notifications and recordkeeping. Total capital/startup costs over the 3-year period of the ICR have been determined to be $0. Total annualized operation and maintenance costs associated with the notification requirements have been determined to be $129.

Burden means the total time, effort, or financial resources expended by persons to generate, maintain, retain, or disclose or provide information to or for a Federal agency. This includes the time needed to: (1) Review instructions; (2) develop, acquire, install, and utilize technology and systems for the purposes of collecting, validating, and verifying information, processing and maintaining information, and disclosing and providing information; (3) adjust the existing ways to comply with any previously applicable instructions and requirements; (4) train personnel to be able to respond to a collection of information; (5) search data sources; (6) complete and review the collection of information; and (7) transmit or otherwise disclose the information.

An agency may not conduct or sponsor, and a person is not required to respond to, a collection of information unless it displays a currently valid OMB control number. The OMB control numbers for EPA's regulations are listed in 40 CFR part 9 and 48 CFR chapter 15.

Comments are requested on the Agency's need for this information, the accuracy of the provided burden estimates, and any suggested methods for minimizing respondent burden, including through the use of automated collection techniques. Send comments on the ICR to the Director, Collection Strategies Division; U.S. Environmental Protection Agency (2822); 1200 Pennsylvania Avenue, NW, Washington, DC 20460; and to the Office of Information and Regulatory Affairs, Office of Management and Budget, 725 17th St., NW, Washington, DC 20503, marked ''Attention: Desk Officer for EPA.'' Include the ICR number in any correspondence. Since OMB is required to make a decision concerning the ICR between 30 and 60 days after August 28, 2000, a comment to OMB is best assured of having its full effect if OMB receives it by September 27, 2000. The final rule will respond to any OMB or public comments on the information collection requirements contained in this proposal.

H. National Technology Transfer and Advancement Act of 1995

Section 12(d) of the National Technology Transfer and Advancement Act of 1995 (NTTAA), Pub. L. No. 104–113, section 12(d) (15 U.S.C. 272 note), directs all Federal agencies to use voluntary consensus standards instead of government-unique standards in their regulatory and procurement activities, unless to do so would be inconsistent with applicable law or otherwise impractical. Voluntary consensus standards are technical standards (such as materials specifications, test methods, sampling procedures, business practices) developed or adopted by one or more voluntary consensus standards bodies. Examples of organizations generally regarded as voluntary consensus standards bodies include the American Society for Testing and Materials (ASTM), the National Fire Protection Association (NFPA), and the Society of Automotive engineers (SAE). The NTTAA requires Federal agencies to provide Congress, through annual reports to OMB, with explanations when an agency does not use available and applicable voluntary consensus standards.

Consistent with the NTTAA, EPA conducted searches to identify voluntary consensus standards for use in emissions testing. The search for emissions testing procedures identified 20 voluntary consensus standards that appeared to have possible use in lieu of EPA standard reference methods. However, after reviewing the available standards, EPA determined that nine of the candidate consensus standards identified for measuring emissions of the HAP or surrogates subject to emission limits in the proposed rule would not be practical due to lack of equivalency, documentation, and validation data. Eleven of the remaining candidate consensus standards are under development or under EPA review. The EPA plans to follow, review, and consider adopting these standards after their development and after further review by EPA is completed.

The ASTM D6420–99 is currently under EPA review as an approved alternative to EPA Method 18. The EPA will also compare this final ASTM standard to methods previously approved as alternatives to EPA Method 18 with specific applicability limitations. These methods, designated as ALT–017 and CTM–028, are available through EPA's Emission Measurement Center Internet site at www.epa.gov/ttn/emc/tmethods.html. The final ASTM D6420–99 standard is very similar to these approved alternative methods, which may be equally suitable for specific applications. The EPA plans to continue its review of the final ASTM standard and will consider adopting the ASTM standard at a later date.

The EPA takes comment on compliance demonstration requirements proposed in this rulemaking and specifically invites the public to identify potentially applicable voluntary consensus standards. Commenters should also explain why this proposed rule should adopt these voluntary consensus standards in lieu of EPA's standards. Emission test methods submitted for evaluation should be accompanied with a basis for the recommendation, including method validation data and the procedure used to validate the candidate method (if a method other than EPA Method 301 (40 CFR part 63, appendix A) was used).

Table 4 to the proposed rule lists the EPA test methods included in the proposed rule. Most of the methods have been used by States and industry for more than 10 years. Nevertheless, as specified in § 63.7(e)(2)(ii) and (f) of subpart A, the proposed rule also allows any State or affected source to apply to EPA for permission to use an alternative method in place of any of the EPA test methods listed in Table 4 to the proposed rule.

List of Subjects in 40 CFR Part 63

Environmental protection, Administrative practice and procedure, Air pollution control, Cellulose products manufacturing, Hazardous substances, Intergovernmental relations, Reporting and recordkeeping requirements.

Dated: August 11, 2000.

Carol M. Browner,

Administrator.

For the reasons stated in the preamble, part 63, title 40, chapter I of the Code of the Federal Regulations is proposed to be amended as follows:

PART 63—NATIONAL EMISSION STANDARDS FOR HAZARDOUS AIR POLLUTANTS FOR SOURCE CATEGORIES

1. The authority citation for part 63 continues to read as follows:

Authority: 42 U.S.C. 7401 *et seq.*

2. It is proposed that part 63 be amended by adding subpart UUUU to read as follows:

Subpart UUUU—National Emission Standards for Hazardous Air Pollutants for Cellulose Products Manufacturing

Sec.

What This Subpart Covers

63.5480 What is the purpose of this subpart?
63.5485 Am I subject to this subpart?
63.5490 What parts of my plant does this subpart cover?
63.5495 When do I have to comply with this subpart?

Emission Limits, Operating Limits, and Work Practice Standards

63.5505 What emission limits, operating limits, and work practice standards must I meet?

General Compliance Requirements

63.5515 What are my general requirements for complying with this subpart?

Testing and Initial Compliance Requirements

63.5530 How do I demonstrate initial compliance with the emission limits and work practice standards?
63.5535 What performance tests and other procedures must I use?
63.5540 By what date must I conduct a performance test or other initial compliance demonstration?
63.5545 What are my monitoring installation, operation, and maintenance requirements?

Continuous Compliance Requirements

63.5555 How do I demonstrate continuous compliance with the emission limits, operating limits, and work practice standards?
63.5560 How do I monitor and collect data to demonstrate continuous compliance?

Notifications, Reports, and Records

63.5575 What notifications must I submit and when?
63.5580 What reports must I submit and when?
63.5585 What records must I keep?
63.5590 In what form and how long must I keep my records?

Other Requirements and Information

63.5600 What other requirements apply to me?
63.5605 Who implements and enforces this subpart?
63.5610 What definitions apply to this subpart?

Tables

Table 1 to Subpart UUUU—Emission Limits and Work Practice Standards
Table 2 to Subpart UUUU—Operating Limits
Table 3 to Subpart UUUU—Initial Compliance With Emission Limits and Work Practice Standards
Table 4 to Subpart UUUU—Requirements for Performance Tests
Table 5 to Subpart UUUU—Continuous Compliance with Emission Limits and Work Practice Standards
Table 6 to Subpart UUUU—Continuous Compliance with Operating Limits
Table 7 to Subpart UUUU—Requirements for Notifications
Table 8 to Subpart UUUU—Requirements for Reports
Table 9 to Subpart UUUU—Requirements for Recordkeeping
Table 10 to Subpart UUUU—Applicability of General Provisions to Subpart UUUU

What This Subpart Covers

§ 63.5480 What is the purpose of this subpart?

This subpart establishes emission limits, operating limits, and work practice standards for hazardous air pollutants (HAP) emitted from cellulose products manufacturing operations. Carbon disulfide, carbonyl sulfide, ethylene oxide, methanol, methyl chloride, propylene oxide, and toluene are the HAP emitted in the greatest quantities from cellulose products manufacturing operations. This subpart also establishes requirements to demonstrate initial and continuous compliance with the emission limits, operating limits, and work practice standards.

§ 63.5485 Am I subject to this subpart?

You are subject to this subpart if you own or operate a cellulose products manufacturing operation that is located at a major source of HAP emissions.

(a) Cellulose products manufacturing includes both the Viscose Processes source category and the Cellulose Ethers source category. The Viscose Processes source category includes the collection of manufacturing processes that use the viscose process. These manufacturing processes include the cellulose food casing, rayon, cellophane, and cellulosic sponge manufacturing processes. The Cellulose Ethers source category includes the collection of cellulose ether operations that manufacture any of the following products: carboxymethyl cellulose, hydroxyethyl cellulose, hydroxypropyl cellulose, methyl cellulose, and hydroxypropyl methyl cellulose.

(b) A major source of HAP is any stationary source or group of stationary sources located within a contiguous area and under common control that emits or has the potential to emit any single HAP at a rate of 9.07 megagrams (10 tons) or more per year or any combination of HAP at a rate of 22.68 megagrams (25 tons) or more per year.

§ 63.5490 What parts of my plant does this subpart cover?

(a) This subpart applies to each new, reconstructed, or existing affected source at a cellulose products manufacturing operation.

(b) The affected source for the Viscose Processes source category is the sum of all operations engaged in the production of cellulose food casing, rayon, cellophane, or cellulosic sponge. The affected source for the Cellulose Ethers source category is the sum of all operations engaged in the production of cellulose ethers.

(c) An affected source is a new affected source if you began construction of the affected source after August 28, 2000 and you meet the applicability criteria at the time you began construction.

(d) An affected source is reconstructed if you meet the criteria as defined in § 63.2.

(e) An affected source is existing if it is not new or reconstructed.

§ 63.5495 When do I have to comply with this subpart?

(a) If you have a new or reconstructed affected source, you must comply with this subpart according to the requirements in paragraphs (a)(1) and (2) of this section.

(1) If you start up your affected source before [the effective date of the final rule], then you must comply with this subpart no later than [the effective date of the final rule].

(2) If you start up your affected source after [the effective date of the final rule], then you must comply with this subpart upon startup of your affected source.

(b) If you have an existing affected source, then you must comply with the emission limits, operating limits, and work practice standards for existing sources no later than 3 years after [the effective date of the final rule].

(c) If you have an area source that increases its emissions or its potential to emit so that it becomes a major source of HAP, then the requirements in paragraphs (c)(1) and (2) of this section apply.

(1) Any portion of the existing facility that is a new affected source or a new reconstructed source must be in compliance with this subpart upon startup.

(2) All other parts of the source must be in compliance with this subpart by [3 years after the effective date of the final rule].

(d) You must meet the notification requirements in § 63.5575 according to the schedule in § 63.5575 and in 40 CFR part 63, subpart A. Some of the notifications must be submitted earlier than the compliance date of the standards in this subpart.

Emission Limits, Operating Limits, and Work Practice Standards

§ 63.5505 What emission limits, operating limits, and work practice standards must I meet?

(a) You must meet each emission limit and work practice standard in Table 1 to subpart UUUU that applies to you.

(b) You must meet each operating limit in Table 2 to subpart UUUU that applies to you.

(c) As provided in § 63.6(g), you may apply to EPA for permission to use an alternative to the work practice standards in this section.

General Compliance Requirements

§ 63.5515 What are my general requirements for complying with this subpart?

(a) You must be in compliance with the emission limits, operating limits, and work practice standards in this subpart at all times, except during periods of startup, shutdown, and malfunction.

(b) You must always operate and maintain your affected source, including air pollution control and monitoring equipment, according to the provisions in § 63.6(e)(1)(i).

(c) You must develop and implement a written startup, shutdown, and malfunction (SSM) plan according to the provisions in § 63.6(e)(3).

(d) You must be in compliance with the provisions of subpart A of this part, except as noted in Table 10 to subpart UUUU.

Testing and Initial Compliance Requirements

§ 63.5530 How do I demonstrate initial compliance with the emission limits and work practice standards?

(a) You must demonstrate initial compliance with each emission limit and work practice standard that applies to you according to Table 3 to subpart UUUU. You must also install and operate the monitoring equipment according to the requirements in § 63.5545 that apply to you.

(b) You must establish each site-specific operating limit in Table 2 to subpart UUUU that applies to you according to the requirements in § 63.5535 and Table 4 to subpart UUUU.

(c) You must submit the Notification of Compliance Status report containing the results of the initial compliance demonstration according to the requirements of § 63.5580(e).

§ 63.5535 What performance tests and other procedures must I use?

(a) You must conduct each performance test in Table 4 to this subpart that applies to you.

(b) You must conduct each performance test for continuous process vents according to the requirements in § 63.7(e)(1) and under the specific conditions in Table 4 to this subpart. You must conduct each performance test for batch process vents under the specific conditions in Table 4 to this subpart and not under normal operating conditions as specified in § 63.7(e)(1).

(c) You may not conduct performance tests during periods of startup, shutdown, or malfunction, as specified in § 63.7(e)(1).

(d) You must conduct three separate test runs for each performance test required in this section, as specified in § 63.7(e)(3). Each test run must last at least 1 hour.

(e) You must use the equations in paragraphs (e)(1) through (8) of this section to determine compliance with the emission limits.

(1) Except as specified in paragraphs (e) (5) and (6) of this section, you must calculate the percent reduction for each test run using Equation 1 of this section:

$$PR = \frac{ER_i - ER_o}{\left(ER_s - ER_o\right) + ER_i}\ (100\%) \qquad \text{(Eq. 1)}$$

Where:

PR = percent reduction, percent

ER_i = total emission rate of organic HAP or sulfide in the inlet vent stream of the control device, pounds per hour

ER_o = total emission rate of organic HAP or sulfide in the outlet vent stream of the control device, pounds per hour

ER_s = total emission rate of organic HAP or sulfide in the stack, pounds per hour

(2) The total organic HAP emission rate is the sum of the emission rates of the individual HAP components. You must calculate total organic HAP emission rate for each run using Equation 2 of this section:

$$ER_{HAP_t} = \frac{1}{n}\sum_{i=1}^{n}\left(\sum_{j=1}^{m} ER_{HAP_j}\right) \qquad \text{(Eq. 2)}$$

Where:

ER_{HAPt} = total emission rate of organic HAP in vent stream, pounds per hour

ER_{HAPj} = emission rate of individual organic HAP in vent stream, pounds per hour

j = individual HAP

m = number of individual HAP sampled in each test run

i = test run

n = number of test runs

(3) The total sulfide emission rate is the sum of the emission rates of the individual sulfide components, expressed as carbon disulfide. You must calculate total sulfide emission rate for each test run using Equation 3 of this section:

$$ER_{sulf_t} = \frac{1}{n}\sum_{i=1}^{n}\left(ER_{CS2} + \left(ER_{H2S} * \frac{M_{CS2}}{M_{H2S}}\right) + \left(ER_{COS} * \frac{M_{CS2}}{M_{COS}}\right)\right) \qquad \text{(Eq. 3)}$$

Where:

ER_{sulft} = total emission rate of sulfide in vent stream, pounds per year, as carbon disulfide

ER_{CS2} = emission rate of carbon disulfide in vent stream, pounds per hour

ER_{H2S} = emission rate of hydrogen sulfide in vent stream, pounds per hour

M_{CS2} = mass of carbon disulfide per pound-mole of carbon disulfide, 76 pounds per pound-mole

M_{H2S} = mass of hydrogen sulfide per pound-mole of carbon disulfide, 68

pounds per pound-mole
ER_{COS} = emission rate of carbonyl sulfide in vent stream, pounds per hour
M_{COS} = mass of carbonyl sulfide per pound-mole of carbon disulfide, 120 pounds per pound-mole
i = test run
n = number of test runs

(4) You must calculate the percent reduction with process changes and any other emissions reductions using Equation 4 of this section:

$$PR = \frac{ER_u - ER_s}{ER_u}(100\%) \qquad \text{(Eq. 4)}$$

Where:
PR = percent reduction, percent
ER_u = total uncontrolled emission rate of organic HAP or sulfide prior to process changes and other emission controls, pounds per hour
ER_s = total emission rate of organic HAP or sulfide in the stack, pounds per hour

(5) You must calculate the total uncontrolled emission rate of organic HAP or sulfide prior to process changes and other emission controls using Equation 5 of this section:

$$ER_u = \frac{\left(ER_s - ER_o + ER_i\right)}{\left(100 - CE_{pc}\right)/100} \qquad \text{(Eq. 5)}$$

Where:
ER_u = total uncontrolled emission rate of organic HAP or sulfide prior to process changes and other emission controls, pounds per hour
ER_s = total emission rate of organic HAP or sulfide in the stack, pounds per hour
ER_o = total emission rate of organic HAP or sulfide in the outlet vent stream of the control device, pounds per hour
ER_i = total emission rate of organic HAP or sulfide in the inlet vent stream of the control device, pounds per hour
CE_{pc} = calculated control efficiency of process change, percent

(6) You must calculate the percent reduction for carbon disulfide unloading and storage operations using Equation 6 of this section:

$$PR = \frac{ER_w - ER_n}{ER_w}(100\%) \qquad \text{(Eq. 6)}$$

Where:
PR = percent reduction, percent
ER_w = emission rate of carbon disulfide from water unloading and storage system, pounds per year
ER_n = emission rate of carbon disulfide from nitrogen unloading and storage system, pounds per year

(7) You must calculate the emission rate of carbon disulfide from a water unloading and storage system using Equation 7 of this section:

$$ER_w = \frac{V_{ww} \times C_{CS2} \times F_e \times d_{CS2}}{1 \times 10^6} \qquad \text{(Eq. 7)}$$

Where:
ER_w = emission rate of carbon disulfide from water unloading and storage system, pounds per year
V_{ww} = volume of wastewater, gallons per year
C_{CS2} = concentration of carbon disulfide in water, parts per million volume
F_e = fraction of carbon disulfide emitted from wastewater, 0.92 (based on Table 34 of the HON)
d_{CS2} = density of carbon disulfide, pounds per gallon

(8) You must calculate the emission rate of carbon disulfide from a nitrogen unloading and storage system using Equation 8 of this section:

$$ER_n = \frac{TT \times P_1 \times V_1 \times VP_a \times MW}{TC \times P_2 \times F \times R \times T_a} \qquad \text{(Eq. 8)}$$

Where:
ER_n = emission rate of carbon disulfide from nitrogen unloading and storage system, pounds per year
TT = tank throughput, gallons per year
P_1 = initial head space pressure, pounds per square inch ambient
V_1 = available head space volume (assume 50 percent of capacity), gallons
VP_a = ambient vapor pressure for carbon disulfide, pounds per square inch ambient
MW = molecular weight of carbon disulfide, 76 pounds per pound-mole
TC = tank capacity, gallons
P_2 = maximum vent setting of vapor pressure for carbon disulfide, pounds per square inch ambient
F = conversion factor, 7.48 gallons per cubic foot
R = Ideal gas law constant, 10.73 pounds per square inch-cubic feet per pound-mole-degrees Rankine
T_a = ambient temperature, degrees Rankine

(f) You must establish each site-specific operating limit in Table 2 to this subpart that applies to you according to the requirements in paragraphs (f)(1) through (8) of this section.

(1) For condensers, record the outlet (product side) gas temperature averaged over the same period as the performance test while the vent stream is routed and constituted normally. Locate the temperature sensor in a position that provides a representative temperature.

(2) For thermal oxidizers, record the firebox temperature averaged over the same period as the performance test. Locate the temperature sensor in a position that provides a representative temperature.

(3) For water scrubbers, record the pressure drop and flow rate of the scrubber liquid averaged over the same time period as the performance test (both measured while the vent stream is routed and constituted normally). Locate the pressure and flow sensors in positions that provide representative measurements of the pressure and flow.

(4) For caustic scrubbers, record the pressure drop, flow rate of the scrubber liquid, and pH of the scrubber liquid averaged over the same time period as the performance test (measured while the vent stream is routed and constituted normally). Locate the pressure, flow, and pH sensors in positions that provide representative measurements of the pressure, flow and pH. Ensure the sample is properly mixed and representative of the fluid to be measured.

(5) For flares, comply with the requirements in § 63.11 to establish site-specific operating limits.

(6) For biofilters, record the pressure drop across the biofilter beds, inlet gas temperature, inlet gas flow rate, inlet nutrient and water levels, effluent pH,

effluent conductivity, and effluent nutrient levels averaged over the same time period as the performance test (measured while the vent stream is routed and constituted normally). Locate the pressure, temperature, flow, pH, and conductivity sensors in positions that provide representative measurement of the pressure, temperature, flow, pH, and conductivity. Ensure the sample is properly mixed and representative of the fluid to be measured.

(7) For carbon adsorbers, record the total regeneration stream mass flow during each carbon bed regeneration cycle during the period of the performance test, the temperature of the carbon bed after each regeneration during the period of the performance test (and within 15 minutes of completion of any cooling cycle or cycles), and the operating time since the end of the last regeneration cycle during the period of the performance test. Locate the temperature and flow sensors in positions that provide representative measurement of the temperature and flow.

(8) For oil absorbers, record the flow of absorption liquid through the absorber, the temperatures of the absorption liquid before and after the steam stripper, and the steam flow through the steam stripper averaged during the same period of the performance test. Locate the temperature and flow sensors in positions that provide representative measurement of the temperature and flow.

§ 63.5540 By what date must I conduct a performance test or other initial compliance demonstration?

(a) You must conduct performance tests at least 180 calendar days before the compliance date that is specified for your source in § 63.5495 and according to the provisions in § 63.7(a)(2).

(b) For each emission limit or work practice standard that applies to you in Table 3 of this subpart where initial compliance is not demonstrated using a performance test, you must conduct the initial compliance demonstration within 30 calendar days after the compliance date that is specified for your source in § 63.5495.

§ 63.5545 What are my monitoring installation, operation, and maintenance requirements?

(a) You must install, operate, and maintain each continuous parameter monitoring system (CPMS) according to the requirements in paragraphs (a)(1) through (6) of this section.

(1) The CPMS must complete a minimum of one cycle of operation for each successive 15-minute period. You must have a minimum of three of the four required data points to constitute a valid hour of data.

(2) Have valid hourly data for at least 66 percent of every averaging period (such as, two valid hourly values for a 3-hour averaging period).

(3) Determine the hourly average of all recorded readings.

(4) Determine the 3-hour average of all recorded readings for each 3-hour period during the semiannual reporting period described in Table 8 to this subpart.

(5) Record the results of each inspection, calibration, and validation check.

(b) For each temperature monitoring device, you must meet the requirements in paragraphs (a) and (b)(1) through (7) of this section.

(1) Locate the temperature sensor in a position that provides a representative temperature.

(2) Use a temperature sensor with a minimum tolerance of 2.2 °C or 0.75 percent of the temperature value, whichever is larger.

(3) Shield the temperature sensor system from electromagnetic interference and chemical contaminants.

(4) If a chart recorder is used, it must have a sensitivity in the minor division of at least 20 °F.

(5) At least semiannually, perform an electronic calibration, according to the procedures in the manufacturer's owners manual. Following the electronic calibration, you must conduct a temperature sensor validation check, in which a second or redundant temperature sensor placed near the process temperature sensor must yield a reading within 16.7 °C of the process temperature sensor's reading.

(6) Conduct calibration and validation checks any time the sensor exceeds the manufacturer's specified maximum operating temperature range, or install a new temperature sensor.

(7) At least monthly, inspect all components for integrity and all electrical connections for continuity, oxidation, and galvanic corrosion.

(c) For each flow measurement device, you must meet the requirements in paragraphs (a) and (c)(1) through (5) of this section.

(1) Locate the flow sensor and other necessary equipment, such as straightening vanes, in a position that provides a representative flow.

(2) Use a flow sensor with a minimum tolerance of 2 percent of the flow rate.

(3) Reduce swirling flow or abnormal velocity distributions due to upstream and downstream disturbances.

(4) At least semiannually, conduct a flow sensor calibration check.

(5) At least monthly, inspect all components for integrity, all electrical connections for continuity, and all mechanical connections for leakage.

(d) For each pressure measurement device, you must meet the requirements in paragraphs (a) and (d)(1) through (7) of this section.

(1) Locate the pressure sensor(s) in a position that provides a representative measurement of the pressure.

(2) Minimize or eliminate pulsating pressure, vibration, and internal and external corrosion.

(3) Use a gauge with a minimum tolerance of 0.5 inch of water or a transducer with a minimum tolerance of 1 percent of the pressure range.

(4) Check pressure tap pluggage daily.

(5) Using a manometer, check gauge calibration quarterly and transducer calibration monthly.

(6) Conduct calibration checks any time the sensor exceeds the manufacturer's specified maximum operating pressure range, or install a new pressure sensor.

(7) At least monthly, inspect all components for integrity, all electrical connections for continuity, and all mechanical connections for leakage.

(e) For each pH measurement device, you must meet the requirements in paragraphs (a) and (e)(1) through (4) of this section.

(1) Locate the pH sensor in a position that provides a representative measurement of pH.

(2) Ensure the sample is properly mixed and representative of the fluid to be measured.

(3) Check the pH meter's calibration on at least two points every 8 hours of process operation.

(4) At least monthly, inspect all components for integrity and all electrical connections for continuity.

Continuous Compliance Requirements

§ 63.5555 How do I demonstrate continuous compliance with the emission limits, operating limits, and work practice standards?

(a) You must demonstrate continuous compliance with each emission limit, operating limit, and work practice standard in Tables 1 and 2 to this subpart that applies to you according to methods specified in Tables 5 and 6 to this subpart.

(b) You must report each instance in which you did not meet each emission limit, each operating limit, and each work practice standard in Tables 5 and 6 to this subpart that apply to you. This includes periods of startup, shutdown, and malfunction. These instances are

deviations from the emission limits, operating limits, and work practice standards in this subpart. These deviations must be reported according to the requirements in § 63.5580.

(c) During periods of startup, shutdown, and malfunction, you must operate according to the SSM plan.

(d) Consistent with §§ 63.6(e) and 63.7(e)(1), deviations that occur during a period of startup, shutdown, or malfunction are not violations if you demonstrate to the Administrator's satisfaction that you were operating according to the SSM plan. The Administrator will determine whether deviations that occur during a period of startup, shutdown, and malfunction are violations, according to the provisions in § 63.6(e).

§ 63.5560 How do I monitor and collect data to demonstrate continuous compliance?

(a) You must monitor and collect data according to this section.

(b) Except for monitor malfunctions, associated repairs, and required quality assurance or control activities (including, as applicable, calibration checks and required zero and span adjustments), you must monitor continuously (or collect data at all required intervals) at all times that the affected source is operating, including periods of startup, shutdown, and malfunction.

(c) You may not use data recorded during monitoring malfunctions, associated repairs, and required quality assurance or control activities in data averages and calculations used to report emission or operating levels, nor may such data be used in fulfilling a minimum data availability requirement, if applicable. You must use all the data collected during all other periods in assessing the operation of the control device and associated control system.

Notifications, Reports, and Records

§ 63.5575 What notifications must I submit and when?

(a) You must submit each notification in Table 7 to this subpart that applies to you.

§ 63.5580 What reports must I submit and when?

(a) You must submit each report in Table 8 to this subpart that applies to you.

(b) Unless the Administrator has approved a different schedule for submitting reports under § 63.10, you must submit each report by the date in Table 8 to this subpart and according to the requirements in paragraphs (b)(1) through (5) of this section.

(1) The first compliance report must cover the period beginning on the compliance date that is specified for your affected source in § 63.5495 and ending on June 30 or December 31, whichever date is the first date following the end of the first calendar half after the compliance date that is specified for your source in § 63.5495.

(2) The first compliance report must be postmarked or delivered no later than July 31 or January 31, whichever date follows the end of the first calendar half after the compliance date that is specified for your affected source in § 63.5495.

(3) Each subsequent compliance report must cover the semiannual reporting period from January 1 through June 30 or the semiannual reporting period from July 1 through December 31.

(4) Each subsequent compliance report must be postmarked or delivered no later than July 31 or January 31, whichever date is the first date following the end of the semiannual reporting period.

(5) For each affected source that is subject to permitting regulations pursuant to 40 CFR part 70 or 40 CFR part 71, and if the permitting authority has established dates for submitting semiannual reports pursuant to 40 CFR 70.6(3)(iii)(A) or 40 CFR 71.6(3)(iii)(A), you may submit the first and subsequent compliance reports according to the dates the permitting authority has established instead of according to the dates in paragraphs (b)(1) through (4) of this section.

(c) The compliance report must contain the information in paragraphs (c)(1) through (6) of this section.

(1) Company name and address.

(2) Statement by a responsible official, with that official's name, title, and signature, certifying the truth, accuracy, and completeness of the content of the report. This certification must state that, based on information and belief formed after reasonable inquiry, the statements and information in the report are true, accurate, and complete.

(3) Date of report and beginning and ending dates of the reporting period.

(4) If you had a startup, shutdown or malfunction during the reporting period and you took actions consistent with your startup, shutdown, and malfunction plan, the compliance report must include the information in § 63.10(d)(5)(i).

(5) If there are no deviations from any emission limits, operating limits, or work practice standards that apply to you (see Tables 5 and 6 to this subpart), the compliance report must contain a statement that there were no deviations from the emission limits, operating limits, or work practice standards during the reporting period.

(6) If there were no periods during which the CPMS was out-of-control, the compliance report must contain a statement that there were no periods during which the CPMS was out-of-control during the reporting period. You must include specifications for out-of-control operation in the CPMS quality control plan required under § 63.8(d)(2).

(d) For each deviation from an emission limit or work practice standard that occurs at an affected source where you are not using a CPMS to demonstrate continuous compliance with the emission limits or work practice standards in this subpart (see Table 5 to this subpart), the compliance report must contain the information in paragraphs (c)(1) through (4) and (d)(1) through (2) of this section. This includes periods of startup, shutdown, and malfunction.

(1) The total operating time of each affected source during the reporting period.

(2) Information on the number, duration, and cause of deviations (including unknown cause, if applicable), as applicable, and the corrective action taken.

(e) For each deviation from an emission limit or operating limit occurring at an affected source where you are using a CPMS to demonstrate continuous compliance with the emission limit or operating limit in this subpart (see Tables 5 and 6 to this subpart), you must include the information in paragraphs (c)(1) through (4) and (e)(1) through (12) of this section. This includes periods of startup, shutdown, and malfunction.

(1) The date and time that each malfunction started and stopped.

(2) The date and time that each CPMS was inoperative, except for zero (low-level) and high-level checks.

(3) The date, time, and duration that each CPMS was out-of-control.

(4) The date and time that each deviation started and stopped, and whether each deviation occurred during a period of startup, shutdown, or malfunction or during another period.

(5) A summary of the total duration of the deviation during the reporting period and the total duration as a percent of the total source operating time during that reporting period.

(6) A breakdown of the total duration of the deviations during the reporting period into those that are due to startup, shutdown, control equipment problems, process problems, other known causes, and other unknown causes.

(7) A summary of the total duration of CPMS downtime during the reporting period and the total duration of CPMS downtime as a percent of the total source operating time during that reporting period.

(8) An identification of each hazardous air pollutant that was monitored at the affected source.

(9) A brief description of the process units.

(10) A brief description of the CPMS.

(11) The date of the latest CPMS certification or audit.

(12) A description of any changes in CPMS, processes, or controls since the last reporting period.

(f) If you have obtained a title V operating permit pursuant to 40 CFR part 70 or 40 CFR part 71, you must report all deviations as defined in this subpart in the semiannual monitoring report required by 40 CFR 70.6(3)(iii)(A) or 40 CFR 71.6(3)(iii)(A). If you submit a compliance report according to Table 8 of this subpart along with, or as part of, the semiannual monitoring report required by 40 CFR 70.6(3)(iii)(A) or 40 CFR 71.6(3)(iii)(A), and the compliance report includes all required information concerning deviations from any emission limit, operating limit, or work practice standard in this subpart, then submitting the compliance report will satisfy any obligation to report the same deviations in the semiannual monitoring report. However, submitting a compliance report will not otherwise affect any obligation you may have to report deviations from permit requirements to the permit authority.

§ 63.5585 What records must I keep?

You must keep the records in Table 9 to this subpart that apply to you.

§ 63.5590 In what form and how long must I keep my records?

(a) Your records must be in a form suitable and readily available for expeditious review, according to § 63.10(b)(1).

(b) As specified in § 63.10(b)(1), you must keep each record for 5 years following the date of each occurrence, measurement, maintenance, corrective action, report, or record.

(c) You must keep each record on site for at least 2 years after the date of each occurrence, measurement, maintenance, corrective action, report, or record, according to § 63.10(b)(1). You can keep the records offsite for the remaining 3 years.

Other Requirements and Information

§ 63.5600 What other requirements apply to me?

Table 10 to this subpart shows which provisions of the General Provisions in §§ 63.1 through 63.13 apply to you.

§ 63.5605 Who implements and enforces this subpart?

(a) This subpart can be implemented and enforced by us, the U.S. Environmental Protection Agency, or a delegated authority, such as your State, local, or tribal agency. If the Administrator has delegated authority to your State, local, or tribal agency, then that agency has the authority to implement and enforce this subpart. You should contact your EPA Regional Office to find out if this subpart is delegated to your State, local, or tribal agency.

(b) In delegating implementation and enforcement authority of this subpart to a State, local, or tribal agency under 40 CFR part 63, subpart E, the Administrator keeps the authorities contained in paragraphs (b)(1) through (4) of this section and does not delegate such authorities to the State, local, or tribal agency.

(1) Approval of alternatives to the non-opacity emission limits, operating limits, and work practice standards in § 63.5505(a) through (c) and under § 63.6(g).

(2) Approval of major alternatives to test methods under § 63.7(e)(2)(ii) and (f) and as defined in § 63.90.

(3) Approval of major alternatives to monitoring under § 63.8(f) and as defined in § 63.90.

(4) Approval of major alternatives to recordkeeping and reporting under § 63.10(f) and as defined in § 63.90.

§ 63.5610 What definitions apply to this subpart?

Terms used in this subpart are defined in the Clean Air Act, in 40 CFR 63.2, and in this section as follows:

Cellophane operation means an operation that manufactures a thin, transparent cellulose material used in food packaging (for example, candy, cheese, baked goods), adhesive tapes, and membranes for industrial uses, such as batteries.

Cellulose ether operation means an operation that manufactures cellulose derivatives used as thickeners and binders in consumer and other products.

Cellulose ether process means a manufacturing process that includes the following process steps:

(1) Reaction of cellulose (for example, wood pulp or cotton linters) with sodium hydroxide to produce alkali cellulose;

(2) Reaction of the alkali cellulose with a chemical compound(s) to produce a cellulose ether product;

(3) Washing and purification of the cellulose ether product; and

(4) Drying of the cellulose ether product.

Cellulose ethers source category means the collection of cellulose ether operations that manufacture any of the following products: carboxymethyl cellulose, hydroxyethyl cellulose, hydroxypropyl cellulose, methyl cellulose, and hydroxypropyl methyl cellulose.

Cellulose food casing operation means an operation that manufactures cellulose casings used in manufacturing meat products (for example, hot dogs, sausages). The food casings are used to form the meat products and, in most cases, are removed from the meat products before sale.

Cellulosic sponge operation means an operation that manufactures a porous cellulose product for consumer use (for example, for cleaning).

Control technique means any equipment or process control used for capturing, recovering, or oxidizing HAP vapors. The equipment includes, but is not limited to, biofilters, carbon adsorbers, condensers, flares, oil absorbers, thermal oxidizers, and scrubbers, or any combination of these. The process control includes extended cookout and viscose process modification (as defined in this section).

Deviation means any instance in which an affected source subject to this subpart, or an owner or operator of such a source:

(1) Fails to meet any requirement or obligation established by this subpart, including, but not limited to, any emission limit, operating limit, or work practice standard;

(2) Fails to meet any term or condition that is adopted to implement an applicable requirement in this subpart and that is included in the operating permit for any affected source required to obtain such a permit; or

(3) Fails to meet any emission limit, operating limit, or work practice standard in this subpart during startup, shutdown, or malfunction, regardless of whether or not such failure is permitted by this subpart.

Emission point means an individual process vent, storage vessel, wastewater stream, or equipment leak.

Equipment leak means emissions of HAP from a pump, valve, flange, sampling connection, or other components (for example, compressor, pressure relief device) in HAP service.

Extended cookout (ECO) means a control technique that reduces the amount of unreacted ethylene oxide (EO) or propylene oxide (PO) leaving the reactor. This is accomplished by allowing the product to react for a longer time, thereby leaving less unreacted EO or PO and reducing emissions of EO or PO that might have occurred otherwise.

Nitrogen system means the combination of a nitrogen unloading system for unloading carbon disulfide and a nitrogen padding system for storing carbon disulfide. The nitrogen unloading system is a system of unloading carbon disulfide from railcars to storage vessels using nitrogen displacement to prevent gaseous carbon disulfide emissions to the atmosphere and to preclude contact with oxygen. The nitrogen padding system is a system of padding the carbon disulfide storage vessels with nitrogen to prevent contact with oxygen.

Oil absorber means a packed-bed absorber that absorbs pollutant vapors using a type of oil (for example, kerosene) as the absorption liquid.

Process vent means a vent from a process operation through which a HAP-containing gas stream is, or has the potential to be, released to the atmosphere. Process vents do not include vents on storage tanks, vents on wastewater emission sources, or pieces of equipment regulated under the equipment leak standards.

Rayon operation means an operation that manufactures cellulose fibers used in the production of either textiles (for example, apparel, drapery, upholstery) or non-woven products (for example, feminine hygiene products, wipes, computer disk liners, surgical swabs).

Reconstruction means replacing components of an affected source so that:

(1) The fixed capital cost of the new components exceeds 50 percent of the fixed capital cost that would be required to construct a comparable new affected source; and

(2) It is technologically and economically feasible for the reconstructed source to meet the relevant standard(s) established in this subpart. Reconstruction excludes any routine part replacement or maintenance. Upon reconstruction, an affected source is subject to relevant standards for new sources, including compliance dates, irrespective of any change in emissions of HAP from that source.

Responsible official means responsible official as defined in 40 CFR 70.2.

Solvent coating process means a manufacturing process in which cellophane film is coated (for example, with Saran or nitrocellulose) to impart moisture impermeability to the film and to make it printable. Both Saran and nitrocellulose use the same solvents—tetrahydrofuran and toluene.

Storage vessel means a tank or other vessel used to store liquids that contain one or more HAP. Storage vessels do not include the following:

(1) Vessels permanently attached to motor vehicles such as trucks, railcars, barges, or ships;

(2) Pressure vessels designed to operate in excess of 204.9 kilopascals (30 pounds per square inch) and without emissions to the atmosphere;

(3) Vessels with capacities smaller than 38 cubic meters (10,000 gallons);

(4) Vessels and equipment storing and/or handling material that contains no HAP or contains HAP as impurities only;

(5) Surge control vessels;

(6) Wastewater storage vessels; and

(7) Storage vessels assigned to another process unit regulated under another subpart of part 63.

Subpart means 40 CFR part 63, subpart UUUU.

Total HAP means the sum of organic HAP emissions measured using EPA Method 18.

Total sulfide means the sum of emissions for carbon disulfide, hydrogen sulfide, and carbonyl sulfide reported as carbon disulfide using EPA Method 15.

Viscose process. (1) Viscose process means a manufacturing process that includes the following process steps:

(i) Reaction of cellulose (for example, wood pulp) with sodium hydroxide to produce alkali cellulose;

(ii) Reaction of alkali cellulose with carbon disulfide to produce sodium cellulose xanthate;

(iii) Combination of sodium cellulose xanthate with additional sodium hydroxide to produce viscose solution;

(iv) Extrusion of the viscose into various shapes (for example, hollow casings, thin fibers, thin sheets, molds);

(v) Regeneration of the cellulose product;

(vi) Washing of the cellulose product; and

(vii) Possibly acid or salt recovery.

(2) The cellulose products manufactured using the viscose process include cellulose food casings, rayon, cellophane, and cellulosic sponges.

Viscose process modification means a change to the viscose process that occurred after January 1992 that allows either the recovery of carbon disulfide or a reduction in carbon disulfide usage in the process.

Viscose processes source category means the collection of manufacturing processes that use the viscose process. These manufacturing processes include the cellulose food casing, rayon, cellophane, and cellulosic sponge manufacturing processes.

Wastewater means water which, during manufacturing or processing, comes into direct contact with, or results from, the production or use of any raw material, intermediate product, by-product, or waste product.

Water system means the combination of a water unloading system for unloading carbon disulfide and a water padding system for storing carbon disulfide. The water unloading system is a system of unloading carbon disulfide from railcars to storage vessels using water displacement to prevent gaseous carbon disulfide emissions to the atmosphere and to preclude contact with oxygen. The water padding system is a system of padding the carbon disulfide storage vessels with water to prevent contact with oxygen. The water, which is saturated with carbon disulfide, is later sent to wastewater treatment.

Work practice standard means any design, equipment, work practice, or operational standard, or combination thereof, that is promulgated pursuant to section 112(h) of the Clean Air Act.

TABLE 1 TO SUBPART UUUU.—EMISSION LIMITS AND WORK PRACTICE STANDARDS

For . . .	At . . .	You must . . .	Or you must . . .	Or you must . . .
1 The sum of all process vents.	Existing cellulose food casing operations.	Reduce total uncontrolled sulfide emissions (reported as carbon disulfide) by at least 25% based on a 6-month rolling average.		

TABLE 1 TO SUBPART UUUU.—EMISSION LIMITS AND WORK PRACTICE STANDARDS—Continued

For . . .	At . . .	You must . . .	Or you must . . .	Or you must . . .
2 The sum of all process vents.	New cellulose food casing operations.	Reduce total uncontrolled sulfide emissions (reported as carbon disulfide) by at least 75% based on a 6-month rolling average.		
3 The sum of all process vents.	Existing rayon operations	Reduce total uncontrolled sulfide emissions (reported as carbon disulfide) by at least 55% based on a 6-month rolling average.		
4 The sum of all process vents.	New rayon operations	Reduce total uncontrolled sulfide emissions (reported as carbon disulfide) by at least 75% based on a 6-month rolling average.		
5 The sum of all cellophane production process vents.	Existing and new cellophane operations.	Reduce total uncontrolled sulfide emissions (reported as carbon disulfide) by at least 85% based on a 6-month rolling average.		
6 The sum of all solvent coating process vents.	Existing and new cellophane operations.	Reduce uncontrolled toluene emissions by at least 95% based on a 6-month rolling average.		
7 The sum of all process vents.	Existing and new cellulosic sponge operations.	Reduce total uncontrolled sulfide emissions (reported as carbon disulfide) by at least 75% based on a 6-month rolling average.		
8 The sum of all process vents.	Existing and new cellulose ether operations.	Reduce total uncontrolled organic HAP emissions by at least 99% based on a 6-month rolling average.		
9 Closed-loop systems.	Existing and new cellulose ether operations.	Comply by operating the existing closed-loop system.		
10 Each carbon disulfide unloading and storage operation.	Existing and new cellulose food casing, rayon, cellophane, and cellulosic sponge operations.	Reduce uncontrolled carbon disulfide emissions by at least 83% from unloading and storage operations based on a 6-month rolling average.	Reduce uncontrolled carbon disulfide emissions by at least 0.14% from process vents.	Install a nitrogen unloading and storage system (as defined in § 63.5610)
11 Each toluene storage vessel.	Existing and new cellophane operations.	Reduce uncontrolled toluene emissions by at least 95% based on a 6-month rolling average.		
12 All sources of waste-water emissions.	Existing and new cellulose ether operations.	Comply with the applicable process wastewater provisions of §§ 63.132–63.140 of subpart G of this part.		
13 Equipment leaks	Existing and new cellulose ether operations.	Comply with the applicable equipment leak standards of §§ 63.162–63.179 of subpart H of this part.	Comply with the applicable equipment leak standards of §§ 65.106–65.118 of subpart F of 40 CFR part 65.	

TABLE 2 TO SUBPART UUUU.—OPERATING LIMITS

For the following control technique . . .	You must . . .
1 Condenser	Maintain the 3-hour average condenser outlet gas temperature no higher than the maximum value established during the performance test.
2 Thermal oxidizer	Maintain the 3-hour average thermal oxidizer firebox temperature no lower than the minimum value established during the performance test.
3 Water scrubber	Maintain the 3-hour average scrubber pressure drop and scrubber liquid flow rate within the operating values established during the performance test.
4 Caustic scrubber	Maintain the 3-hour average scrubber pressure drop, scrubber liquid pH, and scrubber liquid flow rate within the operating values established during the performance test.
5 Flare	Maintain the applicable flare operating parameters in § 63.11 within the operating values established during the performance test.
6 Biofilter	Maintain the 3-hour average biofilter inlet gas temperature, gas flow rate, and nutrient and water values; biofilter effluent pH, conductivity, and nutrient levels; and pressure drop within the operating values established during the performance test.

TABLE 2 TO SUBPART UUUU.—OPERATING LIMITS—Continued

For the following control technique . . .	You must . . .
7 Carbon adsorber	Maintain the regeneration frequency, bed heating temperature, bed cooling temperature, and regeneration stream flow for each regeneration cycle within the values established during the performance test.
8 Oil absorber	Maintain the 3-hour average absorption liquid flow, absorption liquid temperature, and steam flow within the values established during the performance test.
9 Alternative control technique	1. Submit for approval a proposed site-specific monitoring plan that includes (1) a description of the alternative control device, (2) test results verifying the performance of the control device, (3) the appropriate operating parameters that will be monitored, and (4) the frequency of measuring and recording to establish continuous compliance with the operating limits. 2. Install, operate, and maintain the parameter monitoring system for the alternative control device in accordance with the monitoring plan approved by the Administrator. 3. Establish operating limits during the initial performance test based on the operating parameters for the alternative control device included in the approved monitoring plan. 4. Maintain the 3-hour average operating parameter values for the alternative control technique within the values established during the performance test.
10 Any of the control techniques specified in this table.	1. If you wish to establish alternative operating parameters, submit the application for approval of the alternative operating parameters no later than the notification of the performance test. 2. The application must include (1) information justifying the request for alternative operating parameters (such as the infeasibility or impracticality of using the operating parameters in this proposed rule), (2) a description of the proposed alternative control device operating parameters, (3) the monitoring approach, (4) the frequency of measuring and recording the alternative parameters, (5) how the operating limits are to be calculated, and (6) information documenting that the alternative operating parameters would provide equivalent or better assurance of compliance with the standard. 3. Install, operate, and maintain the alternative parameter monitoring systems in accordance with the application approved by the Administrator. 4. Establish operating limits during the initial performance test based on the alternative operating parameters included in the approved application. 5. Maintain the 3-hour average alternative operating parameter values within the values established during the performance test.

TABLE 3 TO SUBPART UUUU.—INITIAL COMPLIANCE WITH EMISSION LIMITS AND WORK PRACTICE STANDARDS

For . . .	At . . .	For the following emission limit or work practice standard . . .	You have demonstrated initial compliance if . . .
1 The sum of all process vents.	Existing cellulose food casing operations.	Reduce total uncontrolled sulfide emissions (reported as carbon disulfide) by at least 25% based on a 6-month rolling average.	1. The average total sulfide emissions, measured during the 3-hour performance test using Method 15, are reduced by the applicable amount; and 2. You have a record of the average operating parameter values over the 3-hour performance test during which the average total sulfide emissions were reduced by the applicable amount; and 3. You prepare a material balance that includes data on carbon disulfide usage and carbon disulfide, hydrogen sulfide, and carbonyl sulfide emissions at the inlet and outlet to the control device and the stack. The material balance must be based on information from the initial performance test.
2 The sum of all process vents.	New cellulose food casing operations.	Reduce total uncontrolled sulfide emissions (reported as carbon disulfide) by at least 75% based on a 6-month rolling average.	1. The average total sulfide emissions, measured during the 3-hour performance test using Method 15, are reduced by the applicable amount; and 2. You have a record of the average operating parameter values over the 3-hour performance test during which the average total sulfide emissions were reduced by the applicable amount; and

TABLE 3 TO SUBPART UUUU.—INITIAL COMPLIANCE WITH EMISSION LIMITS AND WORK PRACTICE STANDARDS—Continued

For . . .	At . . .	For the following emission limit or work practice standard . . .	You have demonstrated initial compliance if . . .
			3. You prepare a material balance that includes data on carbon disulfide usage and carbon disulfide, hydrogen sulfide, and carbonyl sulfide emissions at the inlet and outlet to the control device and the stack. The material balance must be based on information from the initial performance test.
3 The sum of all process vents.	Existing rayon operations	Reduce total uncontrolled sulfide emissions (reported as carbon disulfide) by at least 55% based on a 6-month rolling average.	1. The average total sulfide emissions, measured during the 3-hour performance test using Method 15, are reduced by the applicable amount; and 2. You have a record of the average operating parameter values over the 3-hour performance test during which the average total sulfide emissions were reduced by the applicable amount; and 3. You prepare a material balance that includes data on carbon disulfide usage and carbon disulfide, hydrogen sulfide, and carbonyl sulfide emissions at the inlet and outlet to the control device and the stack. The material balance must be based on information from the initial performance test.
4 The sum of all process vents.	New rayon operations	Reduce total uncontrolled sulfide emissions (reported as carbon disulfide) by at least 75% based on a 6-month rolling average.	1. The average total sulfide emissions, measured during the 3-hour performance test using Method 15, are reduced by the applicable amount; and 2. You have a record of the average operating parameter values over the 3-hour performance test during which the average total sulfide emissions were reduced by the applicable amount; and 3. You prepare a material balance that includes data on carbon disulfide usage and carbon disulfide, hydrogen sulfide, and carbonyl sulfide emissions at the inlet and outlet to the control device and the stack. The material balance must be based on information from the initial performance test.
5 The sum of all cellophane production process vents.	Existing and new cellophane operations.	Reduce total uncontrolled sulfide emissions (as carbon disulfide) by at least 85% based on a 6-month rolling average.	1. The average total sulfide emissions, measured during the 3-hour performance test using Method 15, are reduced by the applicable amount; and 2. You have a record of the average operating parameter values over the 3-hour performance test during which the average total sulfide emissions were reduced by the applicable amount; and

TABLE 3 TO SUBPART UUUU.—INITIAL COMPLIANCE WITH EMISSION LIMITS AND WORK PRACTICE STANDARDS—Continued

For . . .	At . . .	For the following emission limit or work practice standard . . .	You have demonstrated initial compliance if . . .
			3. You prepare a material balance that includes data on carbon disulfide usage and carbon disulfide, hydrogen sulfide, and carbonyl sulfide emissions at the inlet and outlet to the control device and the stack. The material balance must be based on information from the initial performance test.
6 The sum of all solvent coating process vents.	Existing and new cellophane operations.	Reduce uncontrolled toluene emissions by at least 95% based on a 6-month rolling average.	1. Average toluene emissions, measured during the 3-hour performance test using Method 18, are reduced by 95%; and 2. You have a record of the average operating parameter values over the 3-hour performance test during which the average toluene emissions were reduced by 95%; and 3. You prepare a material balance that includes data on toluene usage and emissions at the inlet and outlet to the control device and the stack. The material balance must be based on information from the initial performance test.
7 The sum of all process vents.	Existing and new cellulosic sponge operations.	Reduce total uncontrolled sulfide emissions (as carbon disulfide) by at least 75% based on a 6-month rolling average.	1. The average total sulfide emissions, measured during the 3-hour performance test using Method 15, are reduced by the applicable amount; and 2. You have a record of the average operating parameter values over the 3-hour performance test during which the average total sulfide emissions were reduced by the applicable amount; and 3. You prepare a material balance that includes data on carbon disulfide usage and carbon disulfide, hydrogen sulfide, and carbonyl sulfide emissions at the inlet and outlet to the control device and the stack. The material balance must be based on information from the initial performance test.
8 The sum of all process vents.	Existing and new cellulose ether operations.	Reduce total uncontrolled organic HAP emissions by at least 99% based on a 6-month rolling average.	1. Average total organic HAP emissions, measured during the 3-hour performance test using Method 18, are reduced by 99%; and 2. You have a record of the average operating parameter values over the 3-hour performance test during which the average total organic HAP emissions were reduced by 99%.
9 Closed-loop systems	Existing and new cellulose ether operations.	Operate and maintain the closed-loop system for cellulose ether operations.	You have a record certifying that a closed-loop system is in use for cellulose ether operations.

TABLE 3 TO SUBPART UUUU.—INITIAL COMPLIANCE WITH EMISSION LIMITS AND WORK PRACTICE STANDARDS—Continued

For . . .	At . . .	For the following emission limit or work practice standard . . .	You have demonstrated initial compliance if . . .
10 Each carbon disulfide unloading and storage operation.	Existing and new cellulose food casing, rayon, cellophane, and cellulosic sponge operations.	Reduce uncontrolled carbon disulfide emissions by at least 83% from unloading and storage operations based on a 6-month rolling average. Or	1. You have a record documenting the 83% reduction in carbon disulfide emissions relative to water systems. 2. If you meet the 83 percent emission limit by installing a nitrogen system, you must calculate the actual percent reduction achieved using the applicable equation in § 63.5535. 3. If you meet the 83 percent emission limit by venting emissions to a control device, then you must conduct an initial performance test to demonstrate the actual percent reduction achieved, prepare a material balance based on information from the test and from records at the affected source, and establish the appropriate control device operating parameters during the test. You must calculate the percent reduction of emissions measured during the performance test using the applicable equation in § 63.5535. Or
11	.....	Reduce uncontrolled carbon disulfide by at least 0.14% from process vents based on a 6-month rolling average. Or	1. You comply with the initial compliance requirements for process vents at existing and new cellulose food casing, rayon, cellophane, and cellulosic sponge operations. 2. The 0.14% reduction must be in addition to the reduction already required for the process vents for cellulose food casing, rayon, cellophane, and cellulosic sponge operations. Or
12	.....	Install a nitrogen system for carbon disulfide unloading and storage.	You have a record certifying that a nitrogen system is in use for carbon disulfide unloading and storage operations.
13 Each toluene storage vessel.	Existing and new cellophane operations	Reduce uncontrolled toluene emissions by at least 95% based on a 6-month rolling average.	1. Average toluene emissions, measured during the 3-hour performance test using Method 18, are reduced by 95%; and 2. You have a record of the average operating parameter values over the 3-hour performance test during which the average toluene emissions were reduced by 95%; and 3. You prepare a material balance that includes data on toluene usage and emissions at the inlet and outlet to the control device and the stack. The material balance must be based on information from the initial performance test.
14 All sources of wastewater emissions.	Existing and new cellulose ether operations	Comply with the applicable process wastewater provisions of §§ 63.132–63.140 of subpart G of this part.	You comply with the applicable process wastewater initial compliance provisions of § 63.145 of subpart G of this part.

TABLE 3 TO SUBPART UUUU.—INITIAL COMPLIANCE WITH EMISSION LIMITS AND WORK PRACTICE STANDARDS—Continued

For . . .	At . . .	For the following emission limit or work practice standard . . .	You have demonstrated initial compliance if . . .
15 Equipment leaks	Existing and new cellulose ether operations.	Comply with the applicable equipment leak standards of §§ 63.162–63.179 of subpart H of this part.	You comply with the applicable equipment leak initial compliance provisions of § 63.180 of subpart H of this part.
16 Equipment leaks	Existing and new cellulose ether operations.	Comply with the applicable equipment leak standards of §§ 65.106–65.118 of subpart F of 40 CFR part 65.	You comply with the applicable equipment leak initial compliance status report provisions of §§ 65.120 of subpart F of 40 CFR part 65.

TABLE 4 TO SUBPART UUUU.—REQUIREMENTS FOR PERFORMANCE TESTS

For . . .	At . . .	You must . . .	Using . . .	According to the following requirements . . .
1 The sum of all process vents.	Any existing and new affected source.	Select sampling port's location and the number of traverse ports.	Method 1 or 1A of 40 CFR part 60, appendix A § 63.7(d)(1)(i).	Sampling sites must be located at the inlet and outlet to the control device and the stack.
2 The sum of all process vents.	Any existing and new affected source.	Determine velocity and volumetric flow rate.	Method 2, 2A, 2C, 2D, 2F, or 2G in appendix A to part 60 of this chapter.	You may use Method 2A, 2C, 2D, 2F, or 2G as an alternative to using Method 2.
3 The sum of all process vents.	Any existing and new affected source.	Conduct gas analysis	Method 3, 3A, or 3B in appendix A to part 60 of this chapter.	You may use Method 3A or 3B as an alternative to using Method 3.
4 The sum of all process vents.	Any existing and new affected source.	Measure moisture content of the stack gas.	Method 4 in appendix A to part 60 of this chapter.	
5 The sum of all process vents.	Existing and new cellulose food casing, rayon, cellophane, and cellulosic sponge operations.	Measure total sulfide emissions.	Method 15 in appendix A to part 60 of this chapter.	1. You must conduct testing of emissions from continuous process vents at representative conditions, as specified in § 63.1257(b)(7) of subpart GGG of this part. 2. You must conduct testing of emissions from batch process vents at absolute or hypothetical worst-case conditions or hypothetical worst-case conditions, as specified in § 63.1257(b)(8) of subpart GGG of this part. 3. You must collect operating parameter monitoring system data during the period of the initial performance test, and determine the operating parameter limit during the period of the initial performance test.

TABLE 4 TO SUBPART UUUU.—REQUIREMENTS FOR PERFORMANCE TESTS—Continued

For . . .	At . . .	You must . . .	Using . . .	According to the following requirements . . .
6 The sum of all solvent coating process vents.	Existing and new cellophane operations.	Measure toluene emissions ...	Method 18 in appendix A to part 60 of this chapter.	1. You must conduct testing of emissions from continuous process vents at representative conditions, as specified in § 63.1257(b)(7) of subpart GGG of this part. 2. You must conduct testing of emissions from batch process vents at absolute or hypothetical worst-case conditions or hypothetical worst-case conditions, as specified in § 63.1257(b)(8) of subpart GGG of this part. 3. You must collect operating parameter monitoring system data during the period of the initial performance test, and determine the operating parameter limit during the period of the initial performance test.
7 The sum of all process vents.	Existing and new cellulose ether operations.	Measure total organic HAP emissions.	Method 18, Method 25, or Method 25A in appendix A to part 60 of this chapter.	1. You must use Method 25 to determine the destruction efficiency of thermal oxidizers for organic compounds. 2. You may use Method 25A if: a. An exhaust gas volatile organic matter concentration of 50 ppmv or less is required in order to comply with the emission limit, or b. The volatile organic matter concentration at the inlet to the control device and the required level of control are such as to result in exhaust volatile organic matter concentrations of 50 ppmv or less, or c. Because of the high efficiency of the control device, the anticipated volatile organic matter concentration at the control device exhaust is 50 ppmv or less, regardless of the inlet concentration.

TABLE 4 TO SUBPART UUUU.—REQUIREMENTS FOR PERFORMANCE TESTS—Continued

For . . .	At . . .	You must . . .	Using . . .	According to the following requirements . . .
				3. You must conduct testing of emissions from continuous process vents at representative conditions, as specified in § 63.1257(b)(7) of subpart GGG of this part. 4. You must conduct testing of emissions from batch process vents at absolute or hypothetical worst-case conditions or hypothetical worst-case conditions, as specified in § 63.1257(b)(8) of subpart GGG of this part. 5. You must collect operating parameter monitoring system data during the period of the initial performance test, and determine the operating parameter limit during the period of the initial performance test.
8 Each toluene storage vessel.	Existing and new cellophane operations.	Measure toluene emissions ...	Method 18 in appendix A to part 60 of this chapter.	3. You must collect operating parameter monitoring system data during the period of the initial performance test, and determine the operating parameter limit during the period of the initial performance test.
9 All sources of waste-water emissions.	Existing and new cellulose ether operations.	Measure wastewater HAP emissions.	Applicable process waste-water test methods in § 63.145 of subpart G of this part.	You must follow all requirements for the applicable process wastewater test methods in § 63.145 of subpart G of this part.
10 Equipment leaks	Existing and new cellulose ether operations.	Measure leak rate	Applicable equipment leak test methods in § 63.180 of subpart H of this part or § 65.104 of subpart F of 40 CFR part 65.	You must follow all requirements for the applicable equipment leak test methods in § 63.180 of subpart H of this part or § 65.104 of subpart F of 40 CFR part 65.

TABLE 5 TO SUBPART UUUU.—CONTINUOUS COMPLIANCE WITH EMISSION LIMITS AND WORK PRACTICE STANDARDS

For . . .	At . . .	For the following emission limit or work practice standard . . .	Using the following control technique . . .	You must demonstrate continuous compliance by . . .
1 The sum of all process vents.	Existing and new cellulose food casing, rayon, cellophane, and cellulosic sponge operations.	Applicable emission limit	Process change	1. Maintaining a material balance that includes data on the amount of carbon disulfide that would have been used in the absence of the process change, the amount of carbon disulfide that was used after the process change was implemented, and the total sulfide (as carbon disulfide) emitted from the process; and 2. Documenting the percent reduction using the carbon disulfide usage and emissions data from the material balance.
2 The sum of all process vents.	Existing and new cellulose food casing, rayon, cellophane, and cellulosic sponge operations.	Applicable emission limit	Any control technique	1. Maintaining a material balance that includes data on carbon disulfide usage and carbon disulfide, hydrogen sulfide, and carbonyl sulfide emissions at the inlet and outlet to the control device and the stack; and 2. Documenting the percent reduction of total sulfide (as carbon disulfide) using the emissions data from the material balance.
3 The sum of all solvent coating process vents.	Existing and new cellophane operations.	Reduce uncontrolled toluene emissions by 95% based on a 6-month rolling average.	Any control technique	1. Maintaining a material balance that includes data on toluene usage and emissions at the inlet and outlet to the control device and the stack; and 2. Documenting the percent reduction of toluene using the emissions data from the material balance.
4 The sum of all process vents.	Existing and new cellulose ether operations.	Reduce total uncontrolled organic HAP emissions by at least 99% based on a 6-month rolling average.	Any control technique	1. Reducing average total organic HAP emissions, measured using Method 18, by 99%; and 2. Keeping a record documenting the 99% reduction of the average total organic HAP emissions.

TABLE 5 TO SUBPART UUUU.—CONTINUOUS COMPLIANCE WITH EMISSION LIMITS AND WORK PRACTICE STANDARDS—Continued

For . . .	At . . .	For the following emission limit or work practice standard . . .	Using the following control technique . . .	You must demonstrate continuous compliance by . . .
5 Closed-loop systems.	Existing and new cellulose ether operations.	Operate and maintain a closed-loop system.	Closed-loop system	Keeping a record certifying that a closed-loop system is in use for cellulose ether operations.
6 Each carbon disulfide unloading and storage operation.	Existing and new cellulose food casing, rayon, cellophane, and cellulosic sponge operations.	Reduce uncontrolled carbon disulfide emissions by 83% based on a 6-month rolling average.	Any control technique	Keeping a record documenting the 83% reduction in carbon disulfide emissions relative to water systems.
7 Each carbon disulfide unloading and storage operation.	Existing and new cellulose food casing, rayon, cellophane, and cellulosic sponge operations.	Reduce total uncontrolled sulfide emissions by 0.14% from process vents based on a 6-month rolling average.	Any control technique	1. Maintaining a material balance that includes data on carbon disulfide usage and carbon disulfide, hydrogen sulfide, and carbonyl sulfide emissions at the inlet and outlet to the control device and the stack; and 2. Documenting the percent reduction of total sulfide (as carbon disulfide) using the emissions data from the material balance.
8 Each carbon disulfide unloading and storage operation.	Existing and new cellulose food casing, rayon, cellophane, and cellulosic sponge operations.	Install a nitrogen system for carbon disulfide unloading and storage operations.	Nitrogen system	Keeping a record certifying that a nitrogen system is in use for carbon disulfide unloading and storage operations.
9 Each toluene storage vessel.	Existing and new cellophane operations.	Reduce uncontrolled toluene emissions by 95% based on a 6-month rolling average.	Any control technique	1. Maintaining a material balance that includes data on toluene usage and emissions at the inlet and outlet to the control device and the stack; and 2. Documenting the percent reduction of toluene using the emissions data from the material balance.
10 All sources of waste-water emissions.	Existing and new cellulose ether operations.	Applicable process wastewater provisions of §§ 63.132–63.140 of subpart G of this part.	Applicable process wastewater control techniques of § 63.139 of subpart G of this part.	Complying with the applicable process wastewater continuous compliance provisions of § 63.143 of subpart G of this part.
11 Equipment leaks	Existing and new cellulose ether operations.	Applicable equipment leak standards of §§ 63.162–63.179 of subpart H of this part.	Applicable equipment leak control techniques of §§ 63.162–63.179 of subpart H of this part.	Complying with the applicable equipment leak continuous compliance provisions of §§ 63.162–63.179 of subpart H of this part.

TABLE 5 TO SUBPART UUUU.—CONTINUOUS COMPLIANCE WITH EMISSION LIMITS AND WORK PRACTICE STANDARDS—Continued

For . . .	At . . .	For the following emission limit or work practice standard . . .	Using the following control technique . . .	You must demonstrate continuous compliance by . . .
12 Equipment leaks	Existing and new cellulose ether operations.	Applicable equipment leak standards of §§ 65.106–65.118 of subpart F of 40 CFR part 65.	Applicable equipment leak control techniques of §§ 65.106–65.118 of subpart F of 40 CFR part 65.	Complying with the applicable equipment leak continuous compliance provisions of § 65.104 of subpart F of 40 CFR part 65.

TABLE 6 TO SUBPART UUUU.—CONTINUOUS COMPLIANCE WITH OPERATING LIMITS

For the following control technique . . .	For the following operating limit . . .	You must demonstrate continuous compliance by . . .
1 Condenser	Maintain the 3-hour average condenser outlet gas temperature no higher than the maximum value established during the performance test.	1. Collecting the condenser outlet gas temperature data according to § 63.5545; and 2. Reducing the condenser outlet gas temperature data to 3-hour averages; and 3. Maintaining the 3-hour average condenser outlet gas temperature below the maximum value established during the performance test.
2 Thermal oxidizer	Maintain the 3-hour average thermal oxidizer firebox temperature above the minimum value established during the performance test.	1. Collecting the thermal oxidizer firebox temperature data according to § 63.5545; and 2. Reducing the thermal oxidizer firebox temperature data to 3-hour averages; and 3. Maintaining the 3-hour average thermal oxidizer firebox temperature above the minimum value established during the performance test.
3 Water scrubber	Maintain the 3-hour average scrubber pressure drop and scrubber liquid flow rate within the values established during the performance test.	1. Collecting the scrubber pressure drop and scrubber liquid flow rate data according to § 63.5545; and 2. Reducing the scrubber parameter data to 3-hour averages; and 3. Maintaining the 3-hour scrubber parameter values within the values established during the performance test.
4 Caustic scrubber	Maintain the 3-hour average scrubber pressure drop, scrubber liquid pH, and scrubber liquid flow rate within the values established during the performance test.	1. Collecting the scrubber pressure drop, scrubber liquid pH, and scrubber liquid flow rate data according to § 63.5545; and 2. Reducing the scrubber parameter data to 3-hour averages; and 3. Maintaining the 3-hour scrubber parameter values within the values established during the performance test.
5 Flare	Maintain the applicable flare operating parameter values in § 63.11 within the values established during the performance test.	1. Collecting the applicable flare operating parameter data according to the requirements in § 63.11; and 2. Maintaining the applicable flare operating parameter values in § 63.11 within the values established during the performance test.
6 Biofilter	Maintain the 3-hour average biofilter inlet gas temperature, gas flow rate, and nutrient and water levels; biofilter effluent pH, conductivity, and nutrient levels; and pressure drop within the values established during the performance test.	1. Collecting the biofilter inlet gas temperature, gas flow rate, and nutrient and water levels; biofilter effluent pH, conductivity, and nutrient levels; and biofilter pressure drop data according to § 63.5545; and 2. Reducing the biofilter parameter data to 3-hour averages; and 3. Maintaining the 3-hour biofilter parameter values within the values established during the performance test.
7 Carbon adsorber	Maintain the regeneration frequency, bed heating temperature, bed cooling temperature, and regeneration stream flow for each regeneration cycle within the values established during the performance test.	1. Collecting the regeneration frequency, bed heating temperature, bed cooling temperature, and regeneration stream flow data for each regeneration cycle according to § 63.5545; and 2. Maintaining the carbon adsorber parameter values for each regeneration cycle within the values established during the performance test.

TABLE 6 TO SUBPART UUUU.—CONTINUOUS COMPLIANCE WITH OPERATING LIMITS—Continued

For the following control technique . . .	For the following operating limit . . .	You must demonstrate continuous compliance by . . .
8 Oil absorber	Maintain the 3-hour average absorption liquid flow, absorption liquid temperature, and steam flow within the values established during the performance test.	1. Collecting the absorption liquid flow, absorption liquid temperature, and steam flow data according to § 63.5545; and 2. Reducing the oil absorber parameter data to 3-hour averages; and 3. Maintaining the 3-hour oil absorber parameter values within the values established during the performance test.

TABLE 7 TO SUBPART UUUU.—NOTIFICATIONS

If . . .	Then . . .
1 You operate a new or existing affected source	You must submit all of the notifications in § 63.6 (h)(4) and (h)(5), § 63.7 (b) and (c), § 63.8 (e) and (f)(4) and (f)(6), and § 63.9 (b) through (h) that apply to you by the dates specified.
2 You start up your affected source before [the effective date of the final rule], as specified in § 63.9(b)(2).	You must submit an initial notification not later than [120 days after the effective date of the final rule].
3 You start up your new or reconstructed affected source on or after [the effective date of the final rule], as specified in § 63.9(b)(3).	You must submit an initial notification not later than 120 calendar days after you become subject to this subpart.
4 You are required to conduct a performance test	You must submit a notification of intent to conduct a performance test at least 60 calendar days before the performance test is scheduled to begin, as required in § 63.7(b)(1).
5 You are required to conduct a performance test or other initial compliance demonstration as specified in Table 3 of this subpart.	1. You must submit a Notification of Compliance Status, according to § 63.9(h)(2)(ii). 2. You must submit the Notification of Compliance Status, including the performance test results, before the close of business on the 60th calendar day following the completion of the performance test according to § 63.10(d)(2).
6 You are required to conduct an initial compliance demonstration as specified in Table 3 of this subpart that does not include a performance test.	For each initial compliance demonstration, you must submit the Notification of Compliance Status before the close of business on the 30th calendar day following the completion of the initial compliance demonstration.

TABLE 8 TO SUBPART UUUU.—REPORTING REQUIREMENTS

You must submit a(n) . . .	The report must contain . . .	You must submit the report . . .
1 Compliance report	1. If there are no deviations from any emission limit, operating limit, or work practice standard during the reporting period, then the report must contain the information in § 63.5580(c). 2. If there were no periods during which the CPMS was out-of-control, then the report must contain a statement that there were no periods during which the CPMS was out-of-control during the reporting period. You must develop and include specifications for out-of-control operation in the CPMS quality control plan required under § 63.8(d)(2). 3. If there is a deviation from any emission limit, operating limit, or work practice standard during the reporting period, then the report must contain the information in § 63.5580 (c) and (d). 4. If there were periods during which the CPMS was out-of-control, then the report must contain the information in § 63.5580(e). 5. If you had a startup, shutdown or malfunction during the reporting period and you took actions consistent with your SSM plan, then the report must contain the information in § 63.10(d)(5)(i).	Semiannually according to the requirements in § 63.5580(b).
2 Immediate SSM report if you took actions during a startup, shutdown, or malfunction during the reporting period that are not consistent with your SSM plan.	1. Actions taken for the event	1. By fax or telephone within 2 working days after starting actions inconsistent with the plan.

TABLE 8 TO SUBPART UUUU.—REPORTING REQUIREMENTS—Continued

You must submit a(n) . . .	The report must contain . . .	You must submit the report . . .
	2. The information in § 63.10(d)(5)(ii)	2. By letter within 7 working days after the end of the event unless you have made alternative arrangements with the permitting authority. [§ 63.10(d)(5)(ii)].

TABLE 9 TO SUBPART UUUU.—RECORDKEEPING REQUIREMENTS

You must keep . . .	The record(s) must contain . . .
1 A copy of each notification and report that you submitted to comply with this subpart.	All documentation supporting any initial notification or notification of compliance status that you submitted, according to the requirements in § 63.10(b)(2)(xiv).
2 The records in § 63.6(e)(3) related to startup, shutdown, and malfunction.	1. SSM plan. 2. When actions taken during a startup, shutdown, or malfunction are consistent with the procedures specified in the SSM plan, records demonstrating that the procedures specified in the plan were followed. 3. Records of the occurrence and duration of each startup, shutdown, or malfunction. 4. When actions taken during a startup, shutdown, or malfunction are not consistent with the procedures specified in the SSM plan, records of the actions taken for that event.
3 Records of performance tests, as required in 63.10(b)(2)(viii)	All results of performance tests, including analysis of samples, determination of emissions, and raw data.
4 Records for each continuous parameter monitoring system	Records required in Tables 5 and 6 of this subpart to show continuous compliance with each emission limit and work practice standard that applies to you.
5 Records of closed-loop systems	Records certifying that a closed-loop system is in use for cellulose ether operations.
6 Records of nitrogen systems	Records certifying that a nitrogen system is in use for carbon disulfide unloading and storage operations.
7 Records of material balances	1. If use control device to comply, monthly records that include HAP usage and HAP emissions at the inlet and outlet to the control device and the stack. 2. If use process changes to comply, monthly records that include the amount of HAP that would have been used in the absence of the process change, the amount of HAP that was used after the process change was implemented, and the amount of HAP emitted from the process.
8 Records of calculations	Documenting the percent reduction in HAP emissions using HAP usage and emissions data from the material balances and applicable equations in § 63.5545.

TABLE 10.—APPLICABILITY OF GENERAL PROVISIONS TO SUBPART UUUU

Citation	Subject	Brief description	Applies to Subpart UUUU
§ 63.1	Applicability	Initial applicability determination; applicability after standard established; permit requirements; extensions, notifications.	Yes.
§ 63.2	Definitions	Definitions for part 63 standards	Yes.
§ 63.3	Units and Abbreviations	Units and abbreviations for part 63 standards	Yes.
§ 63.4	Prohibited Activities	Prohibited activities; compliance date; circumvention, severability.	Yes.
§ 63.5	Construction/Reconstruction	Applicability; applications; approvals	Yes.
§ 63.6(a)	Applicability	General provisions apply unless compliance extension; general provisions apply to area sources that become major.	Yes.
§ 63.6(b)(1)–(4)	Compliance Dates for New and Reconstructed sources.	Standards apply at [effective date of the final rule]; 3 years after [effective date of the final rule]; upon startup; 10 years after construction or reconstruction commences for CAA Section 112(f).	Yes.
§ 63.6(b)(5)	Notification	Must notify if commenced construction or reconstruction after proposal.	Yes.
§ 63.6(b)(6)	[Reserved].		

TABLE 10.—APPLICABILITY OF GENERAL PROVISIONS TO SUBPART UUUU—Continued

Citation	Subject	Brief description	Applies to Subpart UUUU
§ 63.6(b)(7)	Compliance Dates for New and Reconstructed Area Sources That Become Major.	Area sources that become major must comply with major source standards immediately upon becoming major, regardless of whether required to comply when they were an area source.	Yes.
§ 63.6(c)(1)–(2)	Compliance Dates for Existing Sources.	Comply according to date in subpart, which must be no later than 3 years after [effective date of the final rule]; for CAA Section 112(f) standards, comply within 90 days of [effective date of the final rule] unless compliance extension.	Yes.
§ 63.6(c)(3)–(4)	[Reserved].		
§ 63.6(c)(5)	Compliance Dates for Existing Area Sources That Become Major.	Area sources that become major must comply with major source standards by date indicated in subpart or by equivalent time period (for example, 3 years).	Yes.
§ 63.6(d)	[Reserved].		
§ 63.6(e)(1)–(2)	Operation & Maintenance	Operate to minimize emissions at all times; correct malfunctions as soon as practicable; operation and maintenance requirements independently enforceable; information Administrator will use to determine if operation and maintenance requirements were met.	Yes.
§ 63.6(e)(3)	Startup, Shutdown, and Malfunction Plan.	Requirement for startup, shutdown, and malfunction and SSM plan; content of SSM plan.	Yes.
§ 63.6(f)(1)	Compliance Except During SSM	You must comply with emission standards at all times except during SSM.	Yes.
§ 63.6(f)(2)–(3)	Methods for Determining Compliance	Compliance based on performance test, operation and maintenance plans, records, inspection.	Yes.
§ 63.6(g)(1)–(3)	Alternative Standard	Procedures for getting an alternative standard	Yes.
§ 63.6(h)	Opacity/Visible Emission (VE) Standards.	Requirements for opacity and visible emission limits	No. Subpart UUUU has no opacity or VE limits.
§ 63.6(h)(1)–(9)	Compliance with Opacity/VE Standards.	You must comply with opacity/VE standards at all times except during SSM.	No. Subpart UUUU has no opacity or VE limits.
§ 63.6(i)(1)–(14)	Compliance Extension	Procedures and criteria for Administrator to grant compliance extension.	Yes.
§ 63.6(j)	Presidential Compliance Exemption	President may exempt source category from requirement to comply with subpart.	Yes.
§ 63.7(a)(1)–(2)	Performance Test Dates	Dates for conducting initial performance test; testing and other compliance demonstrations; must conduct 180 days after first subject to subpart.	Yes. Except for existing sources that is included in § 63.5540.
§ 63.7(a)(3)	Section 114 Authority	Administrator may require a performance test under CAA Section 114 at any time.	Yes.
§ 63.7(b)(1)	Notification of Performance Test	Must notify Administrator 60 days before the test	Yes.
§ 63.7(b)(2)	Notification of Rescheduling	If rescheduling a performance test is necessary, must notify Administrator 5 days before scheduled date of rescheduled test.	Yes.
§ 63.7(c)	Quality Assurance/Test Plan	Requirement to submit site-specific test plan 60 days before the test or on date Administrator agrees with; test plan approval procedures; performance audit requirements; internal and external QA procedures for testing.	Yes.
§ 63.7(d)	Testing Facilities	Requirements for testing facilities	Yes.
§ 63.7(e)(1)	Conditions for Conducting Performance Tests.	Performance tests must be conducted under representative conditions; cannot conduct performance tests during SSM; not a violation to exceed standard during SSM.	Yes. Performance tests conducted under representative conditions for continuous process vents, worst-case conditions for batch process vents, as specified in Table 4 of this subpart.
§ 63.7(e)(2)	Conditions for Conducting Performance Tests.	Must conduct according to subpart and EPA test methods unless Administrator approves alternative.	Yes.
§ 63.7(e)(3)	Test Run Duration	Must have three test runs of at least 1 hour each; compliance is based on arithmetic mean of three runs; conditions when data from an additional test run can be used.	Yes.
§ 63.7(f)	Alternative Test Method	Procedures by which Administrator can grant approval to use an alternative test method.	Yes.

TABLE 10.—APPLICABILITY OF GENERAL PROVISIONS TO SUBPART UUUU—Continued

Citation	Subject	Brief description	Applies to Subpart UUUU
§ 63.7(g)	Performance Test Data Analysis	Must include raw data in performance test report; must submit performance test data 60 days after end of test with the notification of compliance status; keep data for 5 years.	Yes.
§ 63.7(h)	Waiver of Tests	Procedures for Administrator to waive performance test	Yes.
§ 63.8(a)(1)	Applicability of Monitoring Requirements.	Subject to all monitoring requirements in standard	Yes.
§ 63.8(a)(2)	Performance Specifications	Performance Specifications in Appendix B of 40 CFR Part 60 apply.	Yes.
§ 63.8(a)(3)	[Reserved].		
§ 63.8(a)(4)	Monitoring with Flares	Unless your subpart says otherwise, the requirements for flares in § 63.11 apply.	Yes.
§ 63.8(b)(1)	Monitoring	Must conduct monitoring according to standard unless Administrator approves alternative.	Yes.
§ 63.8(b)(2)–(3)	Multiple Effluents and Multiple Monitoring Systems.	Specific requirements for installing monitoring systems; must install on each effluent before it is combined and before it is released to the atmosphere unless Administrator approves otherwise; if more than one monitoring system on an emission point, must report all monitoring system results, unless one monitoring system is a backup.	Yes.
§ 63.8(c)(1)	Monitoring System Operation and Maintenance.	Maintain monitoring system in a manner consistent with good air pollution control practices.	Yes.
§ 63.8(c)(1)(i)	Routine and Predictable SSM	Follow the SSM plan for routine repairs; keep parts for routine repairs readily available; reporting requirements for SSM when action is described in SSM plan.	Yes.
§ 63.8(c)(1)(ii)	SSM not in SSM plan	Reporting requirements for SSM when action is not described in SSM plan.	Yes.
§ 63.8(c)(1)(iii)	Compliance with Operation and Maintenance Requirements.	How Administrator determines if source complying with operation and maintenance requirements; review of source O&M procedures, records; manufacturer's instructions, recommendations; inspection.	Yes.
§ 63.8(c)(2)–(3)	Monitoring System Installation	Must install to get representative emission of parameter measurements; must verify operational status before or at performance test.	Yes.
§ 63.8(c)(4)	Continuous Monitoring System (CMS) Requirements.	CMS must be operating except during breakdown, out-of control, repair, maintenance, and high-level calibration drifts.	No. Replaced with language in § 63.5560.
§ 63.8(c)(4)(i)–(ii)	Continuous Monitoring System (CMS) Requirements.	COMS must have a minimum of one cycle of sampling and analysis for each successive 10-second period and one cycle of data recording for each successive 6-minute period; CEMS must have a minimum of one cycle of operation for each successive 15-minute period.	No. Subpart UUUU does not require CEMS.
§ 63.8(c)(5)	COMS Minimum Procedures	COMS minimum procedures	No. Subpart UUUU has no opacity or VE limits.
§ 63.8(c)(6)	CMS Requirements	Zero and high level calibration check requirements; out-of-control periods.	No. Replaced with language in § 63.5545.
§ 63.8(c)(7)–(8)	CMS Requirements	Out-of-control periods, including reporting	No. Replaced with language in § 63.5580(c)(6).
§ 63.8(d)	CMS Quality Control	Requirements for CMS quality control, including calibration, etc.; must keep quality control plan on record for 5 years; keep old versions for 5 years after revisions.	No, except for requirements in § 63.8(d)(2).
§ 63.8(e)	CMS Performance Evaluation	Notification, performance evaluation test plan, reports	No. Subpart UUUU does not require performance evaluation tests for the CPMS.
§ 63.8(f)(1)–(5)	Alternative Monitoring Method	Procedures for Administrator to approve alternative monitoring.	Yes.
§ 63.8(f)(6)	Alternative to Relative Accuracy Test	Procedures for Administrator to approve alternative relative accuracy tests for CEMS.	No. Subpart UUUU does not require relative accuracy tests for the CPMS.

TABLE 10.—APPLICABILITY OF GENERAL PROVISIONS TO SUBPART UUUU—Continued

Citation	Subject	Brief description	Applies to Subpart UUUU
§ 63.8(g)(1)–(4)	Data Reduction	COMS 6-minute averages calculated over at least 36 evenly spaced data points; CEMS 1-hour averages computed over at least four equally spaced data points; data that cannot be used in average.	No. Replaced with language in § 63.5545(a).
§ 63.8(g)(5)	Data Reduction	Data that cannot be used in computing averages for CEMS and COMS.	Yes. These requirements are applicable to CPMS.
§ 63.9(a)	Notification Requirements	Applicability and State delegation	Yes.
§ 63.9(b)(1)–(5)	Initial Notifications	Submit notification subject 120 days after [effective date of the final rule]; notification of intent to construct/recon-struct; notification of commencement of construct/recon-struct; notification of startup; contents of each.	Yes.
§ 63.9(c)	Request for Compliance Extension	Can request if cannot comply by date or if installed BACT/LAER.	Yes.
§ 63.9(d)	Notification of Special Compliance Requirements for New Source.	For sources that commence construction between proposal and promulgation and want to comply 3 years after [effective date of the final rule].	Yes.
§ 63.9(e)	Notification of Performance Test	Notify Administrator 60 days prior	Yes.
§ 63.9(f)	Notification of VE/Opacity Test	Notify Administrator 30 days prior	No. Subpart UUUU has no opacity or VE limits.
§ 63.9(g)	Additional Notifications When Using CMS.	Notification of performance evaluation; notification using COMS data; notification that exceeded criterion for relative accuracy.	No. Subpart UUUU does not require CEMS.
§ 63.9(h)(1)–(6)	Notification of Compliance Status	Contents; due 60 days after end of performance test or other compliance demonstration, except for opacity/VE, which are due 30 days after; when to submit to Federal vs. State authority.	Yes. Except subpart UUUU has no opacity or VE limits.
§ 63.9(i)	Adjustment of Submittal Deadlines	Procedures for Administrator to approve change in when notifications must be submitted.	Yes.
§ 63.9(j)	Change in Previous Information	Must submit within 15 days after the change	Yes.
§ 63.10(a)	Recordkeeping/Reporting	Applies to all, unless compliance extension; when to submit to Federal vs. State authority; procedures for owners of more than one source.	Yes.
§ 63.10(b)(1)	Recordkeeping/Reporting	General Requirements; keep all records readily available; keep for 5 years.	Yes.
§ 63.10(b)(2)(i)–(iv)	Records related to Startup, Shutdown, and Malfunction.	Occurrence of each of operation (process equipment); occurrence of each malfunction of air pollution equipment; maintenance on air pollution control equipment; actions during startup, shutdown, and malfunction.	Yes.
§ 63.10(b)(2) (vi), (x)–(xi).	CMS Records	Malfunctions, inoperative, out-of-control; calibration checks, adjustments, maintenance.	Yes.
§ 63.10(b)(2) (vii)–(ix)	Records	Measurements to demonstrate compliance with emission limits; performance test, performance evaluation, and VE observation results; measurements to determine conditions of performance tests and performance evaluations.	Yes. Except subpart UUUU has no opacity or VE limits and does not require CEMS.
§ 63.10(b)(2) (xii)	Records	Records when under waiver	Yes.
§ 63.10(b)(2) (xiii)	Records	Records when using alternative to relative accuracy test	No. Subpart UUUU does not require CEMS.
§ 63.10(b)(2) (xiv)	Records	All documentation supporting initial notification and notification of compliance status.	Yes.
§ 63.10(b)(3)	Records	Applicability determinations	Yes.
§ 63.10(c)(1)–(6), (9)–(15).	Records	Additional records for CMS	No. Subpart UUUU does not require CEMS.
§ 63.10(c)(7)–(8)	Records	Records of excess emissions and parameter monitoring exceedances for CMS.	No. Replaced with language in § 63.5585.
§ 63.10(d)(1)	General Reporting Requirements	Requirement to report	Yes.
§ 63.10(d)(2)	Report of Performance Test Results	When to submit to Federal or State authority	Yes.
§ 63.10(d)(3)	Reporting Opacity or VE Observations.	What to report and when	No. Subpart UUUU has no opacity or VE limits.
§ 63.10(d)(4)	Progress Reports	Must submit progress reports on schedule if under compliance extension.	Yes.
§ 63.10(d)(5)	Startup, Shutdown, and Malfunction Reports.	Contents and submission	Yes.

TABLE 10.—APPLICABILITY OF GENERAL PROVISIONS TO SUBPART UUUU—Continued

Citation	Subject	Brief description	Applies to Subpart UUUU
§ 63.10(e)(1)–(2)	Additional CMS Reports	Must report results for each CEM on a unit; written copy of performance evaluation; three copies of COMS performance evaluation.	No. Subpart UUUU does not require CEMS.
§ 63.10(e)(3)	Reports	Excess emission reports	No. Replaced with language in § 63.5580.
§ 63.10(e)(3) (i)–(iii)	Reports	Schedule for reporting excess emissions and parameter monitor exceedance (now defined as deviations).	No. Replaced with language in § 63.5580.
§ 63.10(e)(3) (iv)–(v)	Excess Emissions Reports	Requirement to revert to quarterly submission if there is an excess emissions and parameter monitor exceedance (now defined as deviations); provision to request semiannual reporting after compliance for 1 year; submit report by 30th day following end of quarter or calendar half; if there has not been an exceedance or excess emission (now defined as deviations), report contents is a statement that there have been no deviations.	No. Replaced with language in § 63.5580.
§ 63.10(e)(3) (iv)-(v)	Excess Emissions Reports	Must submit report containing all of the information in § 63.10(c)(5–13), § 63.8(c)(7–8).	No. Replaced with language in § 63.5580.
§ 63.10(e)(3) (vi)-(viii)	Excess Emissions Report and Summary Report.	Requirements for reporting excess emissions for CMSs (now called deviations); requires all of the information in § 63.10(c)(5–13), § 63.8(c)(7–8).	No. Replaced with language in § 63.5580.
§ 63.10(e)(4)	Reporting COMS data	Must submit COMS data with performance test data	No. Subpart UUUU has no opacity or VE limits.
§ 63.10(f)	Waiver for Recordkeeping/Reporting	Procedures for Administrator to waive	Yes.
§ 63.11	Flares	Requirements for flares	Yes.
§ 63.12	Delegation	State authority to enforce standards	Yes.
§ 63.13	Addresses	Addresses where reports, notifications, and requests are sent.	Yes.
§ 63.14	Incorporation by Reference	Test methods incorporated by reference	Yes.
§ 63.15	Availability of Information	Public and confidential information	Yes.

[FR Doc. 00–21073 Filed 8–25–00; 8:45 am]

BILLING CODE 6560–50–P

Federal Register

Monday,
August 28, 2000

Part III

Department of the Interior

National Environmental Policy Act Revised Implementing Procedures; Notice

DEPARTMENT OF THE INTERIOR

[516 DM 1–15]

National Environmental Policy Act Revised Implementing Procedures

AGENCY: Department of the Interior.

ACTION: Notice of proposed revised procedures.

SUMMARY: This notice proposes revised Departmental policies and procedures for compliance with the National Environmental Policy Act (NEPA), as amended, Executive Order 11514, as amended, and the Council on Environmental Quality's regulations. This action is necessary to update these procedures and to make them available to the public on the Department's Internet site. When adopted, these procedures will be published in Part 516 of the Departmental Manual (DM) and will be added to the Electronic Library of Interior Policies (ELIPS). ELIPS is located at: *http://elips.doi.gov/*.

DATES: Submit comments on or before October 12, 2000.

ADDRESSES: Comments may be mailed to: Willie R. Taylor, Director, Office of Environmental Policy and Compliance; Mail Stop (MS) 2340; 1849 C Street, NW; Washington, DC 20240. Electronic comments may be submitted in WordPerfect or MicroSoft Word format to: Willie__R__Taylor@ios.doi.gov.

FOR FURTHER INFORMATION CONTACT: Terence N. Martin, Team Leader, Natural Resources Management; Office of Environmental Policy and Compliance; 1849 C Street, NW; Washington, DC 20240. Telephone: 202–208–5465. E-mail: Terry__Martin@ios.doi.gov.

SUPPLEMENTARY INFORMATION: These procedures address policy as well as procedure in order to assure compliance with the spirit and intent of NEPA. They update our policies and procedures in order to stay current with changing environmental laws and programs of the Federal government. It is the intent of these procedures to continue to set forth one set of broad Departmental directives and instructions to all bureaus and offices of the Department to follow in their NEPA compliance activities. In previous publications of these chapters the Department's bureaus published appendices to Chapter 6 to further describe each bureau's special compliance program. In order to more efficiently handle these appendices in the ELIPS system, it has been decided to republish them as new chapters to this DM part. Therefore, this publication includes new Chapters 8 through 15 which represent the old bureau appendices. These chapters have already received public review and are final. Comments are not being requested on these chapters. In accordance with 1507.3 of the CEQ Regulations, this Department submitted these proposed revisions to CEQ for review. In a letter dated June 14, 1999, CEQ commented on the proposed revisions, and those comments have been addressed here.

Authority: NEPA, the National Environmental Quality Improvement Act of 1970, as amended (42 U.S.C. 4371 *et seq.*); E.O. 11514, March 5, 1970, as amended by E.O. 11991, May 24, 1977; and CEQ Regulations 40 CFR 1507.3

Willie R. Taylor,

Director, Office of Environmental Policy and Compliance.

Department of the Interior

Departmental Manual

Effective Date:
Series: Environmental Quality
Part 516: National Environmental Policy Act of 1969
Chapter 1: Protection and Enhancement of Environmental Quality
Originating Office: Office of Environmental Policy and Compliance

516 DM 1

1.1 Purpose

This Chapter establishes the Department's policies for complying with Title I of the National Environmental Policy Act of 1969, as amended (42 U.S.C. 4321–4347) (NEPA); Section 2 of Executive Order 11514, Protection and Enhancement of Environmental Quality, as amended by Executive Order 11991; and the regulations of the Council on Environmental Quality (CEQ) implementing the procedural provisions of NEPA (40 CFR 1500–1508; identified in Chapters 1–7 as the CEQ Regulations).

1.2 Policy

It is the policy of the Department:

A. To provide leadership in protecting and enhancing those aspects of the quality of the Nation's environment which relate to or may be affected by the Department's policies, goals, programs, plans, or functions in furtherance of national environmental policy;

B. To use all practicable means, consistent with other essential considerations of national policy, to improve, coordinate, and direct its policies, plans, functions, programs, and resources in furtherance of national environmental goals;

C. To interpret and administer, to the fullest extent possible, the policies, regulations, and public laws of the United States administered by the Department in accordance with the policies of NEPA;

D. To consider and give important weight to environmental factors, along with other essential considerations, in developing proposals and making decisions in order to achieve a proper balance between the development and utilization of natural, cultural, and human resources and the protection and enhancement of environmental quality;

E. To consult, coordinate, and cooperate with other Federal agencies and State, local, and Indian tribal governments in the development and implementation of the Department's plans and programs affecting environmental quality and, in turn, to provide to the fullest practicable extent, these entities with information concerning the environmental impacts of their own plans and programs;

F. To provide, to the fullest practicable extent, timely information to the public to better assist in understanding Departmental plans and programs affecting environmental quality and to facilitate their involvement in the development of such plans and programs; and

G. To cooperate with and assist the CEQ.

1.3 General Responsibilities

The following responsibilities reflect the Secretary's decision that the officials responsible for making program decisions are also responsible for taking the requirements of NEPA into account in those decisions and will be held accountable for that responsibility:

A. *Assistant Secretary—Policy, Management and Budget (PMB).*

(1) Is the Department's focal point on NEPA matters and is responsible for overseeing the Department's implementation of NEPA.

(2) Serves as the Department's principal contact with the CEQ.

(3) Assigns to the Director, Office of Environmental Policy and Compliance (OEPC) the responsibilities outlined for that Office in this Part.

B. *Solicitor.* Is responsible for providing legal advice in the Department's compliance with NEPA.

C. *Assistant Secretaries.*

(1) Are responsible for compliance with NEPA, E.O. 11514, as amended, the CEQ Regulations, and this Part for bureaus and offices under their jurisdiction.

(2) Will insure that, to the fullest extent possible, the policies, regulations, and public laws of the

United States administered under their jurisdiction are interpreted and administered in accordance with the policies of NEPA.

D. *Heads of Bureaus and Offices.*

(1) Must comply with the provisions of NEPA, E.O. 11514, as amended, the CEQ Regulations and this Part.

(2) Will interpret and administer, to the fullest extent possible, the policies, regulations, and public laws of the United States administered under their jurisdiction in accordance with the policies of NEPA.

(3) Will continue to review their statutory authorities, administrative regulations, policies, programs, and procedures, including those related to loans, grants, contracts, leases, licenses, or permits, in order to identify any deficiencies or inconsistencies therein which prohibit or limit full compliance with the intent, purpose, and provisions of NEPA and, in consultation with the Solicitor and the Office of Congressional and Legislative Affairs shall take or recommend, as appropriate, corrective actions as may be necessary to bring these authorities and policies into conformance with the intent, purpose, and procedures of NEPA.

(4) Will monitor, evaluate, and control on a continuing basis their activities so as to protect and enhance the quality of the environment. Such activities will include those directed to controlling pollution and enhancing the environment and designed to accomplish other program objectives which may affect the quality of the environment. They will develop programs and measures to protect and enhance environmental quality and assess progress in meeting the specific objectives of such activities as they affect the quality of the environment.

1.4 Consideration of Environmental Values

A. *In Departmental Management.*

(1) In the management of the natural, cultural, and human resources under its jurisdiction, the Department must consider and balance a wide range of economic, environmental, and social objectives at the local, regional, national, and international levels, not all of which are quantifiable in comparable terms. In considering and balancing these objectives, Departmental plans, proposals, and decisions often require recognition of complements and resolution of conflicts among interrelated uses of these natural, cultural, and human resources within technological, budgetary, and legal constraints.

(2) Departmental project reports, program proposals, issue papers, and other decision documents must carefully analyze the various objectives, resources, and constraints, and comprehensively and objectively evaluate the advantages and disadvantages of the proposed actions and their reasonable alternatives. Where appropriate, these documents will utilize and reference supporting and underlying economic, environmental, and other analyses.

(3) The underlying environmental analyses will factually, objectively, and comprehensively analyze the environmental effects of proposed actions and their reasonable alternatives. They will systematically analyze the environmental impacts of alternatives, and particularly those alternatives and measures which would reduce, mitigate or prevent adverse environmental impacts or which would enhance environmental quality. However, such an environmental analysis is not, in and of itself, a program proposal or the decision document, is not a justification of a proposal, and will not support or deprecate the overall merits of a proposal or its various alternatives.

B. *In Internally Initiated Proposals.* Officials responsible for development or conduct of planning and decision making systems within the Department shall incorporate to the maximum extent necessary environmental planning as an integral part of these systems in order to insure that environmental values and impacts are fully considered and in order to facilitate any necessary documentation of those considerations.

C. *In Externally Initiated Proposals.* Officials responsible for development or conduct of loan, grant, contract, lease, license, permit, or other externally initiated activities shall require applicants, to the extent necessary and practicable, to provide environmental information, analyses, and reports as an integral part of their applications. This will serve to encourage applicants to incorporate environmental considerations into their planning processes as well as provide the Department with necessary information to meet its own environmental responsibilities.

1.5 Consultation, Coordination, and Cooperation With Other Agencies and Organizations

A. *Departmental Plans and Programs.*

(1) Officials responsible for planning or implementing Departmental plans and programs will develop and utilize procedures to consult, coordinate, and cooperate with relevant State, local, and Indian tribal governments; other bureaus and Federal agencies; and public and private organizations and individuals concerning the environmental effects of these plans and programs on their jurisdictions or interests.

(2) Bureaus and offices will utilize, to the maximum extent possible, existing notification, coordination and review mechanisms established by the Office of Management and Budget and CEQ. However, use of these mechanisms must not be a substitute for early and positive consultation, coordination, and cooperation with others, especially State, local, and Indian tribal governments.

B. *Other Departmental Activities.*

(1) Technical assistance, advice, data, and information useful in restoring, maintaining, and enhancing the quality of the environment will be made available to other Federal agencies, State, local, and Indian tribal governments, institutions, and individuals as appropriate.

(2) Information regarding existing or potential environmental problems and control methods developed as a part of research, development, demonstration, test, or evaluation activities will be made available to other Federal agencies, State, local, and Indian tribal governments, institutions and other entities as appropriate.

(3) Recognizing the worldwide and long-range character of environmental problems, where consistent with the foreign policy of the United States, appropriate support will be made available to initiatives, resolutions, and programs designed to maximize international cooperation in anticipating and preventing a decline in the quality of the world environment.

C. *Plans and Programs of Other Agencies and Organizations.*

(1) Officials responsible for protecting, conserving, developing, or managing resources under the Department's jurisdiction shall coordinate and cooperate with State, local, and Indian tribal governments, other bureaus and Federal agencies, and public and private organi zations and individuals, and provide them with timely information concerning the environmental effects of these entities' plans and programs.

(2) Bureaus and offices are encouraged to participate early in the planning processes of other agencies and organizations in order to insure full cooperation with and understanding of the Department's programs and interests in natural, cultural, and human resources.

(3) Bureaus and offices will utilize to the fullest extent possible, existing

Departmental review mechanisms to avoid unnecessary duplication of effort and to avoid confusion by other organizations.

1.6 Public Involvement

Bureaus and offices, in consultation with the Office of Communications will develop and utilize procedures to insure the fullest practicable provision of timely public information and understanding of their plans and programs with environmental impact including information on the environmental impacts of alternative courses of action. These procedures will include, wherever appropriate, provision for public meetings or hearings in order to obtain the views of interested parties. Bureaus and offices will also encourage State and local agencies and Indian tribal governments to adopt similar procedures for informing the public concerning their activities affecting the quality of the environment. (See also 301 DM 2.)

1.7 Mandate

A. This Part provides Department-wide instructions for complying with NEPA and Executive Orders 11514, as amended by 11991 (Protection and Enhancement of Environmental Quality) and 12114 (Environmental Effects Abroad of Major Federal Actions).

B. The Department hereby adopts the CEQ Regulations implementing the procedural provisions of NEPA (Sec. 102(2)(C)) except where compliance would be inconsistent with other statutory requirements. In the case of any apparent discrepancies between these procedures and the mandatory provisions of the CEQ Regulations, the regulations shall govern.

C. Instructions supplementing the CEQ Regulations are provided in Chapters 2–7 of this Part. Citations in brackets refer to the CEQ Regulations. Instructions specific to each bureau are currently found in Chapters 8 through 15. This portion of the manual may expand or contract depending on the number of bureaus existing at any particular time. In addition, bureaus may prepare a handbook(s) or other technical guidance for their personnel on how to apply this Part to principal programs.

Department of the Interior

Departmental Manual

Effective Date:

Series: Environmental Quality

Part 516: National Environmental Policy Act of 1969

Chapter 2: Initiating the NEPA Process

Originating Office: Office of Environmental Policy and Compliance

516 DM 2

2.1 Purpose

This Chapter provides supplementary instructions for implementing those portions of the CEQ Regulations pertaining to initiating the NEPA process. The numbers in parentheses signify the appropriate citation in the CEQ Regulations.

2.2 Apply NEPA Early (1501.2)

A. Bureaus will initiate early consultation and coordination with other bureaus and any Federal agency having jurisdiction by law or special expertise with respect to any environmental impact involved, and with appropriate Federal, State, local and Indian tribal agencies authorized to develop and enforce environmental standards.

B. Bureaus will also consult early with interested private parties and organizations, including when the Bureau's own involvement is reasonably foreseeable in a private or non-Federal application.

C. Bureaus will revise or amend program regulations, requirements, or directives to insure that private or non-Federal applicants are informed of any environmental information required to be included in their applications and of any consultation with other Federal agencies, and State, local or Indian tribal governments required prior to making the application. A discussion and a list of these regulations, requirements, or directives are found in 516 DM 6.4 and 6.5. The specific regulations, requirements, or directives for each bureau are found in separate chapters of this part beginning with Chapter 8.

2.3 Whether to prepare an EIS (1501.4)

A. *Categorical Exclusions (CX)* (1508.4).

(1) The following criteria will be used to determine actions to be categorically excluded from the NEPA process: (a) The action or group of actions would have no significant effect on the quality of the human environment; and (b) The action or group of actions would not involve unresolved conflicts concerning alternative uses of available resources.

(2) Based on the above criteria, the classes of actions listed in Appendix 1 to this Chapter are categorically excluded, Department-wide, from the NEPA process. A list of CX specific to Bureau programs will be found in the bureau chapters beginning with Chapter 8.

(3) The exceptions listed in Appendix 2 to this Chapter apply to individual actions within CX. Environmental documents must be prepared for any actions involving these exceptions when such actions would cause material impacts.

(4) Notwithstanding the criteria, exclusions and exceptions above, extraordinary circumstances may dictate or a responsible Departmental or Bureau official may decide to prepare an environmental document.

B. *Environmental Assessment (EA)* (1508.9). See 516 DM 3.

C. *Finding of No Significant Impact (FONSI)* (1508.13). A FONSI will be prepared as a separate covering document based upon a review of an EA. Accordingly, the words *include(d)* in Section 1508.13 should be interpreted as *attach(ed)*.

D. *Notice of Intent (NOI)* (1508.22.). An NOI will be prepared as soon as practicable after a decision to prepare an environmental assessment or an environmental impact statement and shall be published in the **Federal Register**, with a copy to the Office of Environmental Policy and Compliance (OEPC) and made available to the affected public in accordance with Section 1506.6. Publication of an NOI may be delayed if there is proposed to be more than three (3) months between the decision to prepare an environmental impact statement and the time preparation is actually initiated. The notice, at a minimum, identifies key personnel, sets forth a schedule, and invites early comment. Scoping requests generally announce a schedule for scoping meetings where the agencies and the public can participate in the formal scoping process. These notices are also usually published in the **Federal Register** and may contain the text of a draft scoping document. The draft scoping document may also be made available upon request to a contact usually named in the notice.

E. *Environmental Impact Statement (EIS)* (1508.11). See 516 DM 4. Decisions/actions which would normally require the preparation of an EIS will be identified in each bureau chapter beginning with Chapter 8.

2.4 Lead Agencies (1501.5)

A. The Assistant Secretary—Policy, Management and Budget (PMB) will designate lead Bureaus within the Department when Bureaus under more than one Assistant Secretary are involved and will represent the Department in consultations with CEQ or other Federal agencies in the resolution of lead agency determinations.

B. Bureaus will inform the of any agreements to assume lead agency status.

C. To eliminate duplication with State and local procedures, a non-Federal agency may be designated as a joint lead agency when it has a duty to comply with State or local requirements that are comparable to the NEPA requirements. In general, bureaus will not become joint lead agencies with another Federal agency but will utilize the cooperating agency mechanism outlined in 40 CFR 1501.6.

2.5 Cooperating Agencies (1501.6)

A. The will assist Bureaus and coordinate requests from non-Interior agencies in determining cooperating agencies.

B. Bureaus will inform the of any agreements to assume cooperating agency status or any declinations pursuant to Section 1501.6(c).

C. Any non-Federal agency may be a cooperating agency by agreement and bureaus are urged to utilize this process. Bureaus will consult with the Solicitor's Office in cases where such non-Federal agencies are also applicants before the Department to determine relative lead/cooperating agency responsibilities.

2.6 Scoping (1501.7)

A. The invitation requirement in Section 1501.7(a)(1) may be satisfied by including such an invitation in the NOI.

B. Scoping is a process which continues throughout the planning and early stages of preparation of an EIS. Scoping is encouraged by bureaus to engage the public in the early identification of concerns, potential impacts, and possible alternative actions.

C. If scoping meetings are held, it should be made clear that the lead agency is ultimately responsible for the scope of an EIS and that suggestions obtained during scoping are considered to be advisory.

2.7 Time Limits (1501.8)

When time limits are established they should reflect the availability of personnel and funds.

Chapter 2; Appendix 1

Departmental Categorical Exclusions

The following actions are categorical exclusions (CX) pursuant to 516 DM 2.3A(2). However, environmental documents will be prepared for individual actions within these CX if the exceptions listed in 516 DM 2, Appendix 2, apply.

1.1 Personnel actions and investigations and personnel services contracts.

1.2 Internal organizational changes and facility and office reductions and closings.

1.3 Routine financial transactions including such things as salaries and expenses, procurement contracts, guarantees, financial assistance, income transfers, audits, fees, bonds and royalties.

1.4 Departmental legal activities including but not limited to such things as arrests, investigations, patents, claims, and legal opinions. This does not include bringing judicial or administrative civil or criminal enforcement actions which are already excluded in 40 CFR 1508.18(a).

1.5 Regulatory and enforcement actions, including inspections, assessments, administrative hearings and decisions; when the regulations themselves or the instruments of regulations (leases, permits, licenses, etc.) have previously been covered by the NEPA process or are exempt from it.

1.6 Nondestructive data collection, inventory (including field, aerial and satellite surveying and mapping), study, research and monitoring activities.

1.7 Routine and continuing government business, including such things as supervision, administration, operations, maintenance and replacement activities having limited context and intensity; *e.g.,* limited size and magnitude or short-term effects.

1.8 Management, formulation, allocation, transfer and reprogramming of the Department's budget at all levels. (This does not exclude the preparation of environmental documents for proposals included in the budget when otherwise required.)

1.9 Legislative proposals of an administrative or technical nature, including such things as changes in authorizations for appropriations, and minor boundary changes and land transactions; or having primarily economic, social, individual or institutional effects; and comments and reports on referrals of legislative proposals.

1.10 Policies, directives, regulations and guidelines of an administrative, financial, legal, technical or procedural nature; or the environmental effects of which are too broad, speculative or conjectural to lend themselves to meaningful analysis and will later be subject to the NEPA process, either collectively or case-by-case.

1.11 Activities which are educational, informational, advisory or consultative to other agencies, public and private entities, visitors, individuals or the general public.

Chapter 2; Appendix 2

Exceptions to Categorical Exclusions

The following exceptions apply to individual actions within categorical exclusions (CX). Environmental documents must be prepared for actions which may:

2.1 Have material adverse effects on public health or safety.

2.2 Have adverse effects on such unique geographic characteristics as historic or cultural resources, park, recreation or refuge lands, wilderness areas, wild or scenic rivers, national natural landmarks, sole or principal drinking water aquifers, prime farmlands, wetlands, floodplains, and ecologically significant or critical areas.

2.3 Have highly controversial environmental effects.

2.4 Have highly uncertain and potentially significant environmental effects or involve unique or unknown environmental risks.

2.5 Establish a precedent for future action or represent a decision in principle about future actions with potentially significant environmental effects.

2.6 Be directly related to other actions with individually insignificant but cumulatively significant environmental effects.

2.7 Have adverse effects on properties listed or eligible for listing on the National Register of Historic Places.

2.8 Have adverse effects on species listed or proposed to be listed on the List of Endangered or Threatened Species, or have adverse effects on designated Critical Habitat for these species.

2.9 Have material adverse effects on resources requiring compliance with Executive Order 11988 (Floodplain Management), Executive Order 11990 (Protection of Wetlands), or the Fish and Wildlife Coordination Act.

2.10 Threaten to violate a Federal, State, local or tribal law or requirement imposed for the protection of the environment.

2.11 Involve unresolved conflicts concerning alternative uses of available resources (NEPA Sec. 102(2)(E)).

2.12 Have a disproportionate, significant adverse effect on low income or minority populations (EO 12898).

2.13 Restrict access to and ceremonial use of Indian sacred sites by Indian religious practitioners or adversely affect the physical integrity of such sacred sites (EO 13007).

2.14 Contribute to the introduction, continued existence or spread of Federally listed noxious weeds (Federal Noxious Weed Control Act).

2.15 Contribute to the introduction, continued existence or spread of non-

native invasive species or actions that may promote the introduction, growth, or expansion of the range of non-native invasive species (EO 13112).

Department of the Interior

Departmental Manual

Effective Date:
Series: Environmental Quality
Part 516: National Environmental Policy Act of 1969
Chapter 3: Environmental Assessments
Originating Office: Office of Environmental Policy and Compliance

516 DM 3

3.1 Purpose

This Chapter provides supplementary instructions for implementing those portions of the CEQ Regulations pertaining to environmental assessments (EA).

3.2 When To Prepare (1501.3)

A. An EA will be prepared for all actions, except those covered by a categorical exclusion, covered sufficiently by an earlier environmental document, or for those actions for which a decision has already been made to prepare an EIS. The purpose of such an EA is to allow the responsible official to determine whether to prepare an EIS.

B. In addition, an EA may be prepared on any action at any time in order to assist in planning and decision making.

3.3 Public Involvement

A. Public notification must be provided and, where appropriate, the public involved in the EA process (1506.6).

B. The scoping process may be applied to an EA (1501.7).

3.4 Content

A. At a minimum, an EA will include brief discussions of the need for the proposal, of alternatives as required by Section 102(2)(E) of NEPA, of the environmental impacts of the proposed action and such alternatives, and a listing of agencies and persons consulted (1508.9(b)).

B. In addition, an EA may be expanded to describe the proposal, a broader range of alternatives, and proposed mitigation measures if this facilitates planning and decision making.

C. The level of detail and depth of impact analysis should normally be limited to that needed to determine whether there are significant environmental effects.

D. An EA will contain objective analyses which support its environmental impact conclusions. It will not, in and of itself, conclude whether or not an EIS will be prepared. This conclusion will be made upon review of the EA by the responsible official and documented in either an NOI or FONSI.

3.5 Format

A. An EA may be prepared in any format useful to facilitate planning and decision making.

B. An EA may be combined with any other planning or decision making document; however, that portion which analyzes the environmental impacts of the proposal and alternatives will be clearly and separately identified and not spread throughout or interwoven into other sections of the document.

3.6 Adoption

A. An EA prepared for a proposal before the Department by another agency, entity or person, including an applicant, may be adopted if, upon independent evaluation by the responsible official, it is found to comply with this Chapter and relevant provisions of the CEQ Regulations.

B. When appropriate and efficient, a responsible official may augment such an EA when it is essentially but not entirely in compliance in order to make it so.

C. If such an EA or augmented EA is adopted, responsible officials must prepare their own NOI or FONSI which also acknowledges the origin of the EA and takes full responsibility for its scope and content.

Department of the Interior

Departmental Manual

Effective Date:
Series: Environmental Quality
Part 516: National Environmental Policy Act of 1969
Chapter 4: Environmental Impact Statements
Originating Office: Office of Environmental Policy and Compliance

516 DM 4

4.1 Purpose

This Chapter provides supplementary instructions for implementing those portions of the CEQ regulations pertaining to environmental impact statements (EIS).

4.2 Statutory Requirements (1502.3)

NEPA requires that an EIS be prepared by the responsible Federal official. This official is normally the lowest-level official who has overall responsibility for formulating, reviewing, or proposing an action or, alternatively, has been delegated the authority or responsibility to develop, approve, or adopt a proposal or action. Preparation at this level will insure that the NEPA process will be incorporated into the planning process and that the EIS will accompany the proposal through existing review processes.

4.3 Timing (1502.5)

A. The feasibility analysis (go/no-go) stage, at which time an EIS is to be completed, is to be interpreted as the stage prior to the first point of major commitment to the proposal. For example, this would normally be at the authorization stage for proposals requiring Congressional authorization, the location or corridor stage for transportation, transmission, and communication projects, and the leasing stage for mineral resources proposals.

B. An EIS need not be commenced until an application is essentially complete; *e.g.,* any required environmental information is submitted, any consultation required with other agencies has been conducted, and any required advance funding is paid by the applicant.

4.4 Page Limits (1502.7)

Where the text of an EIS for a complex proposal or group of proposals appears to require more than the normally prescribed limit of 300 pages, bureaus will insure that the length of such statements is no greater than necessary to comply with NEPA, the CEQ regulations, and this Chapter.

4.5 Supplemental Statements (1502.9)

A. Supplements are only required if such changes in the proposed action or alternatives, new circumstances, or resultant significant effects are not adequately analyzed in the previously prepared EIS.

B. A bureau and/or the appropriate program Assistant Secretary will consult with the Office of Environmental Policy and Compliance (OEPC) and the Office of the Solicitor prior to proposing to CEQ to prepare a final supplement without preparing an intervening draft.

C. If, after a decision has been made based on a final EIS, a described proposal is further defined or modified and if its changed effects are minor or still within the scope of the earlier EIS, an EA and FONSI may be prepared for subsequent decisions rather than a supplement.

4.6 Format (1502.10)

A. Proposed departures from the standard format described in the CEQ

regulations and this Chapter must be approved by the OEPC.

B. The section listing the preparers of the EIS will also include other sources of information, including a bibliography or list of cited references, when appropriate.

C. The section listing the distribution of the EIS will also briefly describe the consultation and public involvement processes utilized in planning the proposal and in preparing the EIS, if this information is not discussed elsewhere in the document.

D. If CEQ's standard format is not used or if the EIS is combined with another planning or decision making document, the section which analyzes the environmental consequences of the proposal and its alternatives will be clearly and separately identified and not interwoven into other portions of or spread throughout the document.

4.7 Cover Sheet (1502.11)

The cover sheet will also indicate whether the EIS is intended to serve any other environmental review or consultation requirements pursuant to Section 1502.25.

4.8 Summary (1502.12)

The emphasis in the summary should be on those considerations, controversies, and issues which significantly affect the quality of the human environment.

4.9 Purpose and Need (1502.13)

This section may introduce a number of factors, including economic and technical considerations and Departmental or bureau statutory missions, which may be beyond the scope of the EIS. Care should be taken to insure an objective presentation and not a justification.

4.10 Alternatives Including the Proposed Action (1502.14)

A. As a general rule, the following guidance will apply:

(1) For internally initiated proposals; *i.e.,* for those cases where the Department conducts or controls the planning process, both the draft and final EIS shall identify the bureaus' proposed action.

(2) For externally initiated proposals; *i.e.,* for those cases where the Department is reacting to an application or similar request, the draft and final EIS shall identify the applicant's proposed action and the bureau's preferred alternative unless another law prohibits such an expression.

(3) Proposed departures from this guidance must be approved by the OEPC and the Office of the Solicitor.

B. Mitigation measures are not necessarily independent of the proposed action and its alternatives and should be incorporated into and analyzed as a part of the proposal and appropriate alternatives. Where appropriate, major mitigation measures may be identified and analyzed as separate alternatives in and of themselves where the environmental consequences are distinct and significant enough to warrant separate evaluation.

4.11 Appendix (1502.18)

If an EIS is intended to serve other environmental review or consultation requirements pursuant to Section 1502.25, any more detailed information needed to comply with these requirements may be included as an appendix.

4.12 Incorporation by Reference (1502.21)

Citations of specific topics will include the pertinent page numbers. All literature references will be listed in the bibliography.

4.13 Incomplete or Unavailable Information (1502.22)

The references to overall costs in this section are not limited to market costs, but include other costs to society such as social costs due to delay.

4.14 Methodology and Scientific Accuracy (1502.24)

Conclusions about environmental effects will be preceded by an analysis that supports that conclusion unless explicit reference by footnote is made to other supporting documentation that is readily available to the public.

4.15 Environmental Review and Consultation Requirements (1502.25)

A. A list of related environmental review and consultation requirements is available from the OEPC.

B. If the EIS is intended to serve as the vehicle to fully or partially comply with any of these requirements, the associated analyses, studies, or surveys will be identified as such and discussed in the text of the EIS and the cover sheet will so indicate. Any supporting analyses or reports will be referenced or included as an appendix and shall be sent to reviewing agencies as appropriate in accordance with applicable regulations or procedures.

4.16 Inviting Comments (1503.1)

A. Comments from State agencies will be requested through procedures established by the Governor pursuant to Executive Order 12372, and may be requested from local agencies through these procedures to the extent that they include the affected local jurisdictions. See 511 DM and the current OEPC guidance on this topic.

B. When the proposed action may affect the environment of an Indian reservation, comments will be requested from the Indian tribe through the tribal governing body, unless the tribal governing body has designated an alternate review process.

C. The comments of other Departmental bureaus and offices must also be requested. In order to do this, the preparing bureau must furnish copies of the environmental document to the other bureaus in quantities sufficient to allow simultaneous review. Guidance is found in the Environmental Statement Memoranda Series (ESM) periodically updated by the OEPC.

4.17 Response to Comments (1503.4)

A. Preparation of a final EIS need not be delayed in those cases where a Federal agency, from which comments are required to be obtained (1503.1(a)(1)), does not comment within the prescribed time period. Informal attempts will be made to determine the status of any such comments and every reasonable attempt should be made to include the comments and a response in the final EIS.

B. When other commentors are late, their comments should be included in the final EIS to the extent practicable.

C. For those EISs requiring the approval of the Assistant Secretary—Policy, Management and Budget (PMB) pursuant to 516 DM 6.3, bureaus will consult with the OEPC when they propose to prepare an abbreviated final EIS (1503.4(c)).

4.18 Elimination of Duplication With State and Local Procedures (1506.2)

Bureaus will incorporate in their appropriate program regulations provisions for the preparation of an EIS by a State agency to the extent authorized in Section 102(2)(D) of NEPA. Eligible programs are listed in Appendix I to this Chapter.

4.19 Combining Documents (1506.4)

See 516 DM 4.6D.

4.20 Departmental Responsibility (1506.5)

Following the responsible official's preparation or independent evaluation of and assumption of responsibility for an environmental document, an applicant may print it provided the applicant is bearing the cost of the document pursuant to other laws.

4.21 Public Involvement (1506.6)

See 516 DM 1.6 and 301 DM 2.

4.22 Further Guidance (1506.7)

The OEPC may provide further guidance concerning NEPA pursuant to its organizational responsibilities (110 DM 22) and through supplemental directives (381 DM 4.5B)

4.23 Proposals for Legislation (1506.8)

The Office of Congressional and Legislative Affairs, in consultation with the OEPC, shall:

A. Identify in the annual submittal to OMB of the Department's proposed legislative program any requirements for and the status of any environmental documents.

B. When required, insure that a legislative EIS is included as a part of the formal transmittal of a legislative proposal to the Congress.

4.24 Time Periods (1506.10)

A. The minimum review period for a draft EIS will be forty-five (45) days from the date of publication by the Environmental Protection Agency of the notice of availability.

B. For those ElSs requiring the approval of the Assistant Secretary—PMB pursuant to 516 DM 6.3, the OEPC will be responsible for consulting with the Environmental Protection Agency and/or CEQ about any proposed reductions in time periods or any extensions of time periods proposed by those agencies.

Chapter 4, Appendix 1

Programs of Grants to States in Which Agencies Having Statewide Jurisdiction May Prepare EISs

1.1 Fish and Wildlife Service.

A. Anadromous Fish Conservation (=15.600).

B. Fish Restoration (=15.605).

C. Wildlife Restoration (=15.611).

D. Endangered Species Conservation (=15 612).

E. Marine Mammal Grant Program (=15.613).

1.2 Bureau of Land Management.

A. Wildlife Habitat Management Technical Assistance (=15.219).

1.3 National Park Service.

A. Historic Preservation Grants-in-Aid (=15.904).

B. Outdoor Recreation-Acquisition Development and Planning (=15.916).

1.4 Bureau of Reclamation.

A. National Water Research and Development Program (=15.505).

1.5 Office of Surface Mining.

A. Regulation of Surface Coal Mining and Surface Effects of Underground Coal Mining (=15.250).

B. Abandoned Mine Land Reclamation (AMLR) Program (=15.252).

1.6 Office of Territorial and International Affairs.

A. Economic and Political Development of the Territories and the Trust Territory of the Pacific Islands (=15.875).

Note. —Citations in parentheses refer to the Catalog of Federal Domestic Assistance. Office of Management and Budget. 1983.

Department of the Interior

Departmental Manual

Effective Date:

Series: Environmental Quality

Part 516: National Environmental Policy Act of 1969

Chapter 5: Relationship to Decision Making

Originating Office: Office of Environmental Policy and Compliance

516 DM 5

5.1 Purpose

This Chapter provides supplementary instructions for implementing those portions of the CEQ Regulations pertaining to decision making.

5.2 Predecision Referrals to CEQ [1504.3]

A. Upon receipt of advice that another Federal agency intends to refer a Departmental matter to CEQ, the lead bureau will immediately meet with that Federal agency to attempt to resolve the issues raised and expeditiously notify its Assistant Secretary and the Office of Environmental Policy and Compliance (OEPC).

B. Upon any referral of a Departmental matter to CEQ by another Federal agency, the OEPC will be responsible for coordinating the Department's role with CEQ. The lead bureau will be responsible for developing and presenting the Department's position at CEQ including preparation of briefing papers and visual aids.

5.3 Decision Making Procedures [1505.1]

A. Procedures for decisions by the Secretary/Deputy Secretary are specified in 301 DM 1. Assistant Secretaries should follow a similar process when an environmental document accompanies a proposal for their decision.

B. Bureaus will incorporate in their formal decision making procedures and NEPA handbooks provisions for consideration of environmental factors and relevant environmental documents. The major decision points for principal programs likely to have significant environmental effects will be identified in the bureau chapters on ''Managing the NEPA Process'' beginning with Chapter 8 of this Part.

C. Relevant environmental documents, including supplements, will be included as part of the record in formal rulemaking or adjudicatory proceedings.

D. Relevant environmental documents, comments, and responses will accompany proposals through existing review processes so that Departmental officials use them in making decisions.

E. The decision maker will consider the environmental impacts of the alternatives described in any relevant environmental document and the range of these alternatives must encompass the alternatives considered by the decision maker.

5.4 Record of Decision [1505.2]

A. Any decision documents prepared pursuant to 301 DM 1 for proposals involving EIS may incorporate all appropriate provisions of Section 1505.2(b) and (c).

B. If a decision document incorporating these provisions is made available to the public following a decision, it will serve the purpose of a record of decision.

5.5 Implementing the Decision [1505.3]

The terms ''monitoring'' and ''conditions'' will be interpreted as being related to factors affecting the quality of the human environment.

5.6 Limitations on Actions [1506.1]

A bureau will notify its Assistant Secretary, the Solicitor, and the OEPC of any situations described in Section 1506.1(b).

5.7 Timing of Actions [1506.10]

For those EISs requiring the approval of the Assistant Secretary—Policy, Management and (PMB) pursuant to 516 DM 6.3, the responsible official will consult with the OEPC before making any request for reducing the time period before a decision or action.

5.8 Emergencies [1506.11]

In the event of an unanticipated emergency situation, a bureau will immediately take any necessary action to prevent or reduce risks to public health or safety or serious resource losses then expeditiously consult with its Assistant Secretary, the Solicitor, OEPC, and CEQ about compliance with NEPA. Upon learning of the emergency situation, the OEPC will immediately notify CEQ. During followup activities OEPC and the bureau will jointly be responsible for consulting with CEQ. Additional guidance is available in the OEPC Environmental Statement Memoranda Series periodically updated by and available from OEPC.

Department of the Interior

Departmental Manual

Effective Date:
Series: Environmental Quality
Part 516: National Environmental Policy Act of 1969
Chapter 6: Managing the NEPA Process
Originating Office: Office of Environmental Policy and Compliance

516 DM 6

6.1 Purpose

This Chapter provides supplementary instructions for implementing those provisions of the CEQ Regulations pertaining to procedures for implementing and managing the NEPA process.

6.2 Organization for Environmental Quality

A. *Office of Environmental Policy and Compliance.* The Director, Office of Environmental Policy and Compliance (OEPC), reporting to the Assistant Secretary—Policy, Management and Budget (PMB), is responsible for providing advice and assistance to the Department on matters pertaining to environmental quality and for overseeing and coordinating the Department's compliance with NEPA, E.O. 11514, the CEQ Regulations, and this Part. (See also 110 DM 22.)

B. *Bureaus and Offices.* Heads of bureaus and offices will designate organizational elements or individuals, as appropriate, at headquarters and regional levels to be responsible for overseeing matters pertaining to the environmental effects of the bureau's plans and programs. The individuals assigned these responsibilities should have management experience or potential, understand the bureau's planning and decision making processes, and be well trained in environmental matters, including the Department's policies and procedures so that their advice has significance in the bureau's planning and decisions. These organizational elements will be identified in Chapters 8–15 which contain all bureau NEPA requirements.

6.3 Approval of EISs

A. A program Assistant Secretary is authorized to approve an EIS in those cases where the responsibility for the decision for which the EIS has been prepared rests with the Assistant Secretary or below. The Assistant Secretary may further assign the authority to approve the EIS if he or she chooses. The Assistant Secretary—PMB will make certain that each program Assistant Secretary has adequate safeguards to assure that the EISs comply with NEPA, the CEQ Regulations, and the Departmental Manual.

B. The Assistant Secretary—PMB is authorized to approve an EIS in those cases where the decision for which the EIS has been prepared will occur at a level in the Department above an individual program Assistant Secretary.

6.4 List of Specific Compliance Responsibilities

A. Bureaus and offices shall:

(1) Prepare NEPA handbooks providing guidance on how to implement NEPA in principal program areas.

(2) Prepare program regulations or directives for applicants.

(3) Propose categorical exclusions.

(4) Prepare and approve EAs.

(5) Decide whether to prepare an EIS.

(6) Prepare and publish NOIs and FONSIs.

(7) Prepare and, when assigned, approve EISs.

B. Assistant Secretaries shall:

(1) Approve bureau handbooks.

(2) Approve regulations or directives for applicants.

(3) Approve categorical exclusions.

(4) Approve EISs pursuant to 516 DM 6.3.

C. The Assistant Secretary—PMB shall:

(1) Concur with regulations or directives for applicants.

(2) Concur with categorical exclusions.

(3) Approve EISs pursuant to 516 DM 6.3.

6.5 Bureau Requirements

A. Requirements specific to bureaus appear as separate chapters beginning with Chapter 8 of this Part and include the following:

(1) Identification of officials and organizational elements responsible for NEPA compliance.

(2) List of program regulations or directives which provide information to applicants.

(3) Identification of major decision points in principal programs for which an EIS is normally prepared.

(4) List of categorical exclusions.

B. Bureau requirements are found in the following chapters for the current bureaus:

(1) Fish and Wildlife Service (Chapter 8; formerly Appendix 1).

(2) Geological Survey (Chapter 9; formerly Appendix 2).

(3) Bureau of Indian Affairs (Chapter 10; formerly Appendix 4).

(4) Bureau of Land Management (Chapter 11; formerly Appendix 5).

(5) National Park Service (Chapter 12; formerly Appendix 7).

(6) Office of Surface Mining (Chapter 13; formerly Appendix 8).

(7) Bureau of Reclamation (Chapter 14; formerly Appendix 9).

(8) Minerals Management Service (Chapter 15; formerly Appendix 10).

C. The Office of the Secretary and other Departmental Offices do not have separate chapters but must comply with this Part and will consult with the OEPC about compliance activities.

6.6 Information About the NEPA Process

The OEPC will publish periodically a Departmental list of contacts where information about the NEPA process and the status of EISs may be obtained.

Department of the Interior

Departmental Manual

Effective Date:
Series: Environmental Quality
Part 516: National Environmental Policy Act of 1969
Chapter 7: Review of Environmental Impact Statements and Project Proposals Prepared by Other Federal Agencies
Originating Office: Office of Environmental Policy and Compliance

516 DM 7

7.1 Purpose

A. These procedures implement the policy and directives of Section 102(2)(C) of the National Environmental Policy Act of 1969 (P.L. 91–190, 83 Stat. 852, January 1, 1970, NEPA); Section 2(f) of Executive Order No. 11514 (March 5, 1970); the CEQ Regulations (43 F.R. 55990, November 28, 1978; CEQ); Bulletin No. 72–6 of the Office of Management and Budget (September 14, 1971); and provide guidance to bureaus and offices of the Department in the review of environmental impact statements prepared by and for other Federal agencies.

B. In accordance with 112 DM 4.1F, these procedures further govern the Department's environmental review of non-Interior proposals such as regulations, applications, plans, reports, and other environmental documents which affect the interests of the Department. Such proposals are prepared, circulated, and reviewed under a wide variety of statutes and regulations. These procedures assure that the Department responds to these review requests with coordinated comments and recommendations under Interior's various authorities.

7.2 Policy

The Department considers it a priority to provide competent and timely review comments on environmental impact statements and other project review documents prepared by other Federal agencies for their major actions which significantly affect the quality of the human environment. All such documents are hereinafter referred to as ''environmental review documents.'' The term ''environmental review document'' or ''environmental document'' as used in this chapter is separate from and broader than the same term found in 40 CFR 1508.10 of the CEQ Regulations. These reviews are predicated on the Department's jurisdiction by law or special expertise with respect to the environmental impact involved and shall provide constructive comments to other Federal agencies to assist them in meeting their environmental responsibilities.

7.3 Responsibilities

A. *The Assistant Secretary—Policy, Management and Budget (PMB):* Shall be the Department's contact point for the receipt of requests for reviews of environmental documents prepared by or for other Federal agencies. This authority shall be carried out through the Director, Office of Environmental Policy and Compliance (OEPC).

B. *Director, Office of Environmental Policy and Compliance*

(1) Shall determine whether such review requests are to be answered by a Secretarial Officer, the Director, OEPC, or by a Regional Environmental Officer, and determine which bureaus and/or offices shall perform such reviews;

(2) Shall prepare, or where appropriate, shall designate a lead bureau responsible for preparing the Department's review comments. The lead bureau may be a bureau, Secretarial office, other Departmental office, or task force and shall be that organizational entity with the most significant jurisdiction or environmental expertise in regard to the requested review;

(3) Shall establish review schedules and target dates for responding to review requests and monitor their compliance;

(4) Shall review, sign, and transmit the Department's review comments to the requesting agency;

(5) Shall consult with the requesting agency on the Department's review comments on an ''as needed'' basis to ensure resolution of the Department's concerns; and

(6) Shall consult with the Legislative Counsel and the Solicitor when environmental reviews pertain to legislative or legal matters, respectively.

C. *The Legislative Counsel:* Shall ensure that requests for reviews of environmental documents prepared by other Federal agencies that accompany or pertain to legislative proposals are immediately referred to the Assistant Secretary—PMB.

D. *Regional Environmental Officers:* When designated by the Director, OEPC, shall review, sign, and transmit the Department's review comments to the requesting agency.

E. *Assistant Secretaries and Heads of Bureaus and Offices:*

(1) Shall designate officials and organizational elements responsible for the coordination and conduct of environmental reviews and report this information to the Director, OEPC;

(2) Shall provide the Director, OEPC with appropriate information and material concerning their delegated jurisdiction and special environmental expertise in order to assist in assigning review responsibilities;

(3) Shall conduct reviews based upon their areas of jurisdiction or special environmental expertise and provide comments to the designated lead bureau or office assigned responsibilities for preparing Departmental comments;

(4) When designated lead bureau by the Director, OEPC, shall prepare and forward the Department's review comments as instructed;

(5) Shall assure that review schedules for discharging assigned responsibilities are met and promptly inform other concerned offices if established target dates cannot be met and when they will be met;

(6) Shall provide a single, unified bureau response to the lead bureau, as directed;

(7) Shall assure that the policies of 516 DM 7.2 regarding competency and timeliness are carried out; and

(8) Shall provided the necessary authority to those designated in E.1 above to carry out all the requirements of 516 DM 7.

7.4 Types of Reviews

A. *Descriptions of Proposed Actions:*

(1) Descriptions of proposed actions are not substitutes for environmental statements. Federal agencies and applicants for Federal assistance may circulate such descriptions, for the purpose of soliciting information concerning environmental impact in order to determine whether or not to prepare environmental impact statements.

(2) Requests for reviews of descriptions of proposed actions are not required to be processed through the OEPC. Review comments may be handled independently by bureaus and offices, with the Regional Environmental Officer or Director, OEPC being advised of significant or highly controversial issues. Review comments are for the purpose of providing informal technical assistance to the requesting agency and should state that they do not represent the views and comments of the Department.

B. *Environmental Assessments or Reports:*

(1) Environmental assessments or reports are not substitutes for environmental statements. These assessments or reports may be prepared by Federal agencies, their consultants, or applicants for Federal assistance. They are prepared either to provide information in order to determine whether or not an environmental statement should be prepared, or to provide input into an environmental statement. If they are separately circulated, it is generally for the purpose of soliciting additional information concerning environmental impact.

(2) Requests for reviews of environmental assessments or reports are not required to be processed through the OEPC. Review comments may be handled independently by bureaus and offices, with the Regional Environmental Officer or Director, OEPC being advised of significant or highly controversial issues. Review comments are for the purpose of providing informal technical assistance to the requesting agency and should state that they do not represent the views and comments of the Department.

C. *Findings of No Significant Impact:*

(1) Findings of No Significant Impact are prepared in lieu of environmental statements by Federal agencies and, in some cases, by applicants for Federal assistance. A Finding of No Significant Impact is a statement for the record by the proponent Federal agency that it has reviewed the environmental impact of its proposed action (generally in an environmental assessment), that it determines that the action will not significantly affect the quality of the human environment, and that an environmental statement is not required. Such findings are not normally circulated.

(2) Findings of No Significant Impact are not required to be processed through the OEPC. Review comments may be handled independently by bureaus and offices and shall concur or not concur with the requesting agency. If a bureau or office does not concur, the Regional Environmental Officer or Director, OEPC will be advised promptly by copy of the comments with a copy of the Finding of No Significant Impact attached.

D. *Notices of Intent and Scoping Requests:*

(1) Notices of intent and scoping requests mark the beginning of the formal review process. Notices of intent are published in the **Federal Register** and announce that an agency plans to prepare an environmental compliance document under NEPA. Often the notice of intent and notice of scoping meetings and/or requests are combined into one **Federal Register** notice.

(2) Reviews of notices of intent and scoping requests are processed through the OEPC with instructions to bureaus to comment directly to the requesting agency. Review comments are for the purpose of providing informal technical assistance to the requesting agency and should state that they do not represent the views and comments of the Department.

E. *Preliminary, Proposed, or Working Draft Environmental Impact Statements:*

(1) Preliminary, proposed, or working draft environmental impact statements are sometimes prepared and circulated by Federal agencies and applicants for Federal assistance for consultative purposes.

(2) Requests for reviews of these types of draft environmental impact statements are not required to be processed through the OEPC. Review comments may be handled independently by bureaus and offices with the Regional Environmental Officer or Director, OEPC being advised of significant or highly controversial issues. Review comments are for the purpose of providing informal technical assistance to the requesting agency and should state that they do not represent the views and comments of the Department.

F. *Draft Environmental Impact Statements:*

(1) Draft environmental impact statements are prepared by Federal agencies under the provisions of Section 102(2)(C) of NEPA and provisions of the CEQ Regulations. They are filed with the Environmental Protection Agency and officially circulated to other Federal agencies for review from their jurisdiction by law or special environmental expertise.

(2) All requests from other Federal agencies for review of draft environmental impact statements shall be made through the Director, OEPC. Review comments shall be handled in accordance with the provisions of this chapter and guidance memoranda issued and updated by the OEPC. This guidance is found in the Environmental Review Memoranda Series (ERM) periodically updated by the OEPC.

G. *Final Environmental Impact Statements:*

(1) Final environmental impact statements are prepared by Federal agencies following receipt and consideration of review comments. They are filed with the Environmental Protection Agency and are generally circulated for information purposes and sometimes for comment.

(2) The Director, OEPC shall review final environmental impact statements to determine whether they reflect adequate consideration of the Department's comments. Bureaus and offices shall not comment independently on final environmental impact statements, but shall inform the Director, OEPC of their views. Any review comments shall be handled in accordance with the instructions of the OEPC.

H. *License and Permit Applications:*

(1) The Department receives draft and final environmental review documents associated with applications for other Federal licenses and permits. This activity largely involves the regulatory program of the Corps of Engineers and the hydroelectric and natural gas pipeline licensing programs of the Federal Energy Regulatory Commission.

(2) Environmental review of applications is generally handled in the same manner as for draft and final environmental impact statements. Additional review guidance may be made available as necessary through the ERMs to efficiently manage this activity. Bureau reviewers should consult with the OEPC for the most current review guidance.

I. *Project Plans and Reports without Associated Environmental Documents:*

(1) The Department receives draft and final project plans and reports under various authorities which do not have environmental documents circulated with them. This may be because NEPA compliance has been completed or will be completed on a slightly different schedule or because NEPA does not apply.

(2) Environmental review of these documents is handled in the same manner as for draft and final environmental impact statements. Additional review guidance may be made available as necessary through the ERMs to efficiently manage this activity. Bureau reviewers should consult with the OEPC for the most current review guidance.

J. *Federal Regulations:*

(1) The Department circulates and controls the review of advance notices of proposed rulemaking, proposed rulemaking, and final rulemaking which are environmental in nature and may impact the Department's natural resources and programs.

(2) Environmental review of these documents is handled in the same manner as for draft and final environmental impact statements. Additional review guidance may be made available as necessary through the ERMs to efficiently manage this activity. Bureau reviewers should consult with the OEPC for the most current review guidance.

K. *Documents Prepared Pursuant to Other Environmental Statutes:*

(1) The Department receives draft and final project plans prepared pursuant to other environmental statutes [*e.g.*, Comprehensive Environmental Response, Compensation, and Liability Act (CERCLA); Resource Conservation and Recovery Act (RCRA), and the Oil Pollution Act (OPA)], which may not have environmental documents circulated with them.

(2) Environmental review of these documents is handled consistently with the policies and provisions of this part, and in accordance with further guidance from the Director, OEPC. Additional review guidance may be made available as necessary through the ERMs to efficiently manage this activity. Bureau reviewers should consult with the OEPC for the most current review guidance.

L. *Section 4(f) Documents:*

(1) Under Section 4(f) of the Department of Transportation Act, the Secretary of Transportation may approve a transportation program or project requiring the use of publicly owned land of a public park, recreation area, or wildlife and waterfowl refuge of national, State or local significance, or land of an historic site of national, State, or local significance (as determined by the Federal, State, or local officials having jurisdiction over the park, area, refuge, or site) only if there is no prudent and feasible alternative to using that land and the program or project includes all possible planning to minimize harm to the park, recreation area, wildlife and waterfowl refuge, or historic site resulting from the use.

(2) Environmental review of Section 4(f) documents is handled in the same manner as for draft and final environmental impact statements. Additional review guidance may be made available as necessary through the ERMs to efficiently manage this activity. Bureau reviewers should consult with the OEPC for the most current review guidance.

7.5 Content of Comments on Environmental Documents

A. *Departmental Comments:*

(1) Departmental comments on environmental documents prepared by other Federal agencies shall be based upon the Department's jurisdiction by law or special expertise with respect to the environmental impact of the proposed action or alternatives to the action. The adequacy of the document in regard to applicable statutes is the responsibility of the agency that prepared the document and any comments on its adequacy shall be limited to the Department's jurisdiction or environmental expertise.

(2) Reviews shall be conducted in sufficient detail to ensure that both potentially beneficial and adverse environmental effects of the proposed action and alternatives, including cumulative and secondary effects, are adequately identified. Wherever possible, and within the Department's competence and resources, other agencies will be advised on ways to avoid or minimize adverse impacts of the proposed action and alternatives, and on alternatives to the proposed action that may have been overlooked or inadequately treated.

(3) Review comments should not capsulize or restate the environmental review document, but should provide clear, concise, substantive, fully justified, and complete comments on the stated or unstated environmental impacts of the proposed action and, if appropriate, on alternatives to the action. Comments, either positive or negative, shall be objective and constructive.

(4) Departmental review comments shall be organized as follows:

(a) *Control Number.*

The Departmental review control number shall be typed in the upper lefthand corner below the Departmental seal on the letterhead page of the comments.

(b) *Introduction.*

The introductory paragraph shall reference the other Federal agency's review request, including the date, the type of review requested, the subject of the review; and, where appropriate, the geographic location of the subject and the other agency's control number.

(c) *General Comments, if any.*

This section will include those comments of a general nature and those which occur throughout the review which ought to be consolidated in order to avoid needless repetition.

(d) *Detailed Comments.*

The format of this section shall follow the organization of the other agency's environmental document. These comments shall not approve, disapprove, support, or object to proposed actions of other Federal agencies, but shall constructively and objectively comment on the environmental impact of the proposed action, and on the adequacy of the statement in describing the environmental impacts of the action, the alternatives, and the impacts of the alternatives. Comments shall specify any corrections, additions, or other changes required to make the statement adequate.

(e) *Summary Comments, if any.*

In general, the Department will not take a position on the proposed action of another Federal agency, but will limit its comments to those above. However, in those cases where the Department has jurisdiction by statute, executive order, memorandum of agreement, or other authority the Department may comment on the proposed action. These comments shall be provided in this section and may take the form of support for, concurrence with, concern over, or objection to the proposed action and/or the alternatives.

B. *Bureau and Office Comments:* Bureau and office reviews of environmental impact statements prepared by other Federal agencies are considered informal inputs to the Department's comments and their content will generally conform to paragraph 7.5A of this chapter with the substitution of the bureau's or office's delegated jurisdiction or special environmental expertise for that of the Department.

C. *Relationship to Other Concurrent Reviews:*

(1) Where the Department, because of other authority or agreement, is concurrently requested to review a proposal as well as its environmental impact statement, the Department's comments on the proposal shall be separately identified and precede the comments on the environmental impact statement. A summary of the Department's position, if any, on the proposal and its environmental impact shall be separately identified and follow the review comments on the environmental impact statement.

(2) Where another Federal agency elects to combine other related reviews into the review of the environmental impact statement by including additional or more specific information into the statement, the introduction to the Department's review comments will acknowledge the additional review request and the review comments will be incorporated into appropriate parts of the combined statement review. A summary of the Department's position, if any, on the environmental impacts of the proposal and any alternatives shall be separately identified and follow the detailed review comments on the combined statement.

(3) In some cases, the concurrent review is not an integral part of the environmental compliance review but is being processed within weeks of the environmental review. If there is also an environmental review being processed by the OEPC, there is potential for two sets of conflicting comments to reach the requesting agency within days. Bureaus must recognize that this possibility exists and must check with the Regional Environmental Officer to determine the status of any environmental review prior to forwarding the concurrent review comments to the requesting agency. Any conflicts must be resolved before the separate comments may be filed. One review may be held up pending completion of the concurrent review and consideration of filing a single comment letter. A time extension may be necessary and must be obtained if a review is to be held up pending completion of a concurrent review.

(4) The Department's intervention in another agency's adjudicatory process is also a concurrent review. Such reviews are governed by 452 DM 2 which must be consulted in applicable cases. The most common cases involve the Department's review of hydroelectric and natural gas applications to the Federal Energy Regulatory Commission. In these cases, it is recommended that bureaus consult frequently with the appropriate attorney of record in the Office of the Solicitor.

7.6 Availability of Review Comments

A. Prior to the public availability of another Federal agency's final environmental impact statement, the Department shall not independently release to the public its comments on that agency's draft environmental impact statement. In accordance with Section 1506.6(f) of the CEQ Regulations, the agency that prepared the statement is responsible for making the comments available to the public, and requests for copies of the Department's comments shall be referred to that agency. Exceptions to this procedure shall be made by the OEPC.

B. Various internal Departmental memoranda, such as the review comments of bureaus, offices, task forces, and individuals, which are used as inputs to the Department's review comments are generally available to the public in accordance with the Freedom of Information Act (5 U.S.C. Section 552) and the Departmental procedures established by 43 C.F.R. 2. Upon receipt of such requests and in addition to

following the procedures above in A., the responsible bureau or office shall notify and consult their bureau Freedom of Information Act Officer and the OEPC to coordinate any responses.

7.7 Procedures for Processing Environmental Reviews

A. *General Procedures:*

(1) All requests for reviews of environmental documents prepared by or for other Federal agencies shall be received and controlled by the Director, OEPC.

(2) If a bureau or office, whether at headquarters or field level, receives an environmental document for review directly from outside of the Department, it should ascertain whether the document is a preliminary, proposed, or working draft circulated for technical assistance or input in order to prepare a draft document or whether the document is in fact a draft environmental document being circulated for official review.

(a) If the document is a preliminary, proposed, or working draft, the bureau or office should handle independently and provide whatever technical assistance possible, within the limits of their resources, to the requesting agency. The response should clearly indicate the type of assistance being provided and state that it does not represent the Department's review of the document. Each bureau or office should provide the Regional Environmental Officer and the Director, OEPC copies of any comments involving significant or controversial issues.

(b) If the document is a draft or final environmental document circulated for official review, the bureau or office should inform the requesting agency of the Department's procedures in subparagraph (1) above and promptly refer the request and the document to the Director, OEPC for processing.

(3) All bureaus and offices processing and reviewing environmental documents of other Federal agencies will do so within the time limits specified by the Director, OEPC. From thirty (30) to forty-five (45) days are normally available for responding to other Federal agency review requests. Whenever possible the Director, OEPC shall seek a forty-five (45) day review period. Further extensions shall be handled in accordance with paragraph 7.7B(3) of this chapter.

(4) The Department's review comments on other Federal agencies' environmental documents shall reflect the full and balanced interests of the Department in the protection and enhancement of the environment. Lead bureaus shall be responsible for resolving any intra-Departmental differences in bureau or office review comments submitted to them. The OEPC is available for guidance and assistance in this regard. In cases where agreement cannot be reached, the matter shall be referred through channels to the Assistant Secretary—PMB with attempts to resolve the disagreement at each intervening management level. The OEPC will assist in facilitating this process.

B. *Processing Environmental Reviews:*

(1) The OEPC shall secure and distribute sufficient copies of environmental documents for Departmental review. Bureaus and offices should keep the OEPC informed as to their needs for review copies, which shall be kept to a minimum, and shall develop internal procedures to efficiently and expeditiously distribute environmental documents to reviewing offices.

(2) Reviewing bureaus and offices which cannot meet the review schedule shall so inform the lead bureau and shall provide the date that the review will be delivered. The lead bureau shall inform the OEPC in cases of headquarters-level response, or the Regional Environmental Officer in cases of field-level response, if it cannot meet the schedule, why it cannot, and when it will. The OEPC or the Regional Environmental Officer shall be responsible for informing the other Federal agency of any changes in the review schedule.

(3) Reviewing offices shall route their review comments through channels to the lead bureau, with a copy to the OEPC. When, in cases, of headquarters-level response, review comments cannot reach the lead bureau within the established review schedule, reviewing bureaus and offices shall send a copy marked ''Advance Copy'' directly to the lead bureau. Review comments shall also be sent to the lead bureau by electronic means to facilitate meeting the requesting agency's deadline.

(4) In cases of headquarters-level response:

(a) The lead bureau shall route the completed comments through channels to the OEPC in both paper copy and electronic wordprocessor format. Copies shall be prepared and attached for all bureaus and offices from whom review comments were requested, for the OEPC, and for the Regional Environmental Officer when the review pertains to a project within a regional jurisdiction. In addition, original copies of all review comments received or documentation that none were provided shall accompany the Department's comments through the clearance process and shall be retained by the OEPC.

(b) The OEPC shall review, secure any necessary additional surnames, surname, and either sign the Department's comments or transmit the Department's comments to another appropriate Secretarial Officer for signature. Upon signature, the OEPC shall transmit the comments to the requesting agency.

(5) In cases of field-level response:

(a) The lead bureau shall provide the completed comments to the appropriate Regional Environmental Officer in both paper-copy and electronic wordprocessor format. In addition, original copies of all review comments received or documentation that none were provided shall be attached to the paper copy.

(b) The Regional Environmental Officer shall review, sign, and transmit the Department's comments to the agency requesting the review. In addition they shall reproduce and send the Department's comments to the regional bureau reviewers. The entire completed package including the bureau review comments shall be sent to the OEPC for recording and filing.

(c) If the Regional Environmental Officer determines that the review involves policy matters of Secretarial significance, they shall not sign and transmit the comments as provided in subparagraph (b) above, but shall forward the review to the OEPC in headquarters for final disposition.

C. Referrals of Environmentally Unsatisfactory Proposals to the Council on Environmental Quality:

(1) Referral to CEQ is a formal process provided for in the CEQ Regulations (40 CFR 1504). It is used sparingly and only when all other administrative processes have been exhausted in attempting to resolve issues between the project proponent and one or more other Federal agencies. These issues must meet certain criteria (40 CFR 1504.2), and practice has shown that these issues generally involve resource concerns of national importance to the Department.

(2) A bureau or office intending to recommend referral of a proposal to CEQ must, at the earliest possible time, advise the proponent Federal agency that it considers the proposal to be a possible candidate for referral. If not expressed at an earlier time, this advice must be outlined in the Department's comments on the draft environmental impact statement.

(3) CEQ referral is a high level activity that must be conducted in an extremely short time frame. A referring bureau or office has 25 days after the final environmental impact statement has

been made available to the Environmental Protection Agency in which to file the referral. The referral documents must be signed by the Secretary of the Interior.

(4) Additional review guidance may be made available as necessary through the ERMs to efficiently manage this activity. Bureau reviewers should consult with the OEPC for the most current review guidance.

Department of the Interior

Departmental Manual

Effective Date:
Series: Environmental Quality
Part 516: National Environmental Policy Act of 1969
Chapter 8: Managing the NEPA Process—Fish and Wildlife Service
Originating Office: Office of Environmental Policy and Compliance

516 DM 8

8.1 Purpose

This Chapter provides supplementary requirements for implementing provisions of 516 DM 1 through 6 within the Department's Fish and Wildlife Service. This Chapter is referenced in 516 DM 6.5.

8.2 NEPA Responsibility

A. The Director is responsible for NEPA compliance for Fish and Wildlife Service (Service) activities, including approving recommendations to the Assistant Secretary (FW) for proposed referrals to the Council on Environmental Quality (CEQ) of other agency actions under 40 CFR 1504.

B. Each Assistant Director (Refuges and Wildlife, Fisheries, International Affairs, External Affairs, and Ecological Services) is responsible for general guidance and compliance in their respective areas of responsibility.

C. The Assistant Director for Ecological Services has been delegated oversight responsibility for Service NEPA compliance.

D. The Division of Habitat Conservation (DHC—Washington), which reports to the Assistant Director for Ecological Services, is responsible for internal control of the environmental review and analysis of documents prepared by other agencies and environmental statements prepared by the various Service Divisions. This office is also responsible for preparing Service NEPA procedures, guidelines, and instructions, and for supplying technical assistance and specialized training in NEPA compliance, in cooperation with the Service Office of Training and Education, to Service entities. The Washington Office Environmental Coordinator, who reports to DHC, provides staff assistance on NEPA matters to the Director, Assistant Directors, and their divisions and offices, and serves as the Service NEPA liaison to the CEQ, the Department's Office of Environmental Policy and Compliance (OEPC), and NEPA liaisons in other Federal agencies, in accordance with 516 DM 6.2.

E. Each Regional Director is responsible for NEPA compliance in his/her area of responsibility. The Regional Director should ensure that Service decisionmakers in his/her area of responsibility contact affected Federal agencies and State, Tribal and local governments when initiating an action subject to an EA or EIS. An individual in each Regional Office, named by title and reporting to the Assistant Regional Director for Ecological Services, other appropriate Assistant Regional Director, or the Regional Director, will have NEPA coordination duties with all program areas at the Regional level similar to those of the Washington Office Environmental Coordinator, in accordance with 516 DM 6.2.

8.3 General Service Guidance

Service guidance on internal NEPA matters is found in 30 AM 2–3 (organizational structure and internal NEPA compliance), 550 FW1–3 (in preparation), 550 FW 3 (documenting and implementing Service decisions on Service actions), and 550 FW 1–2 (replacement to 30 AM 2–3 in preparation). These guidance documents encourage Service participation as a cooperating agency with other Federal agencies, encourage early coordination with other agencies and the public to resolve issues in a timely manner, and provide techniques for streamlining the NEPA process and integrating the NEPA process with other Service programs, environmental laws, and executive orders. Some Service programs have additional NEPA compliance information related to specific program planning and decisionmaking activities. Service program guidance on NEPA matters must be consistent with the Service Manual on NEPA guidance and Departmental NEPA procedures. For example, additional NEPA guidance is found in the Federal Aid Handbook (521–523 FW), refuge planning guidance (602 FW 1–3), Handbook for Habitat Conservation Planning and Incidental Take Processing, and North American Wetlands Conservation Act Grant Application Instructions.

8.4 Guidance to Applicants

A. Service Permits. The Service has responsibility for issuing permits to Federal and State agencies and private parties for actions which would involve certain wildlife species and/or use of Service-administered lands. When applicable, the Service may require permit applicants to provide additional information on the proposal and on its environmental effects as may be necessary to satisfy the Service's requirements to comply with NEPA, other Federal laws, and executive orders.

(1) Permits for the Taking, Possession, Transportation, Sale, Purchase, Barter, Exportation, or Importation of Certain Wildlife Species. The Code of Federal Regulations, Part 13, Title 50 (50 CFR 13) contains regulations for General Permit Procedures. Section 13.3 lists types of permits and the pertinent Parts of 50 CFR. These include: Importation, Exportation, and Transportation of Wildlife (Part 14); Exotic Wild Bird Conservation (Part 15); Injurious Wildlife (Part 16); Endangered and Threatened Wildlife and Plants (Part 17); Marine Mammals (Part 18); Migratory Bird Hunting (Part 20); Migratory Bird Permits (Part 21); Eagle Permits (Part 22); Endangered Species Convention (Part 23); and Importation and Exportation of Plants (Part 24). Potential permit applicants should request information from the appropriate Regional Director, or the Office of Management Authority, U.S. Fish and Wildlife Service, Department of the Interior, Washington, DC 20240, as outlined in the applicable regulation.

(2) Federal Lands Managed by the Service. Service lands are administered under the National Wildlife Refuge System Administration Act of 1966 (16 U.S.C. 668dd-668ee), the Refuge Recreation Act of 1962 (16 U.S.C. 460k-460k-4), and the Alaska National Interest Lands Conservation Act of 1980 (16 U.S.C. 410hh-3233, 43 U.S.C. 1602–1784). Inherent in these acts is the requirement that only those uses that are compatible with the purposes of the refuge system unit may be allowed on Service lands. The Service also complies with Executive Order 12996, signed March 25, 1996, entitled ''Management and General Public Use of the National Wildlife Refuge System.'' This Executive Order identifies general public uses that will be given priority consideration in refuge planning and management, subject to meeting the compatibility requirement and if adequate funding is available to administer the use. Detailed procedures regarding comprehensive management

planning and integration with NEPA are found in the Service Manual (602 FW 1–3). Reference to this and other National Wildlife Refuge System requirements are found in the Code of Federal Regulations, Title 50 parts 25–29, 31–36, 60, and 70–71. Under these regulations, these protections are extended to all Service-administered lands, including the National Fish Hatchery System.

B. Federal Assistance to States, Local or Private Entities.

(1) Federal Assistance Programs. The Service administers financial assistance (grants and/or cooperative agreements) to State, local, and private entities under the Anadromous Fish Conservation Act (CFDA #15.600); North American Wetlands Conservation Act; Fish and Wildlife Act of 1956; Migratory Bird Conservation Act; Food Security Act of 1985; Food, Agriculture, Conservation and Trade Act of 1990; Partnerships for Wildlife Act of 1992; and Consolidated Farm and Rural Development Act. The Service administers financial assistance to States under the Sport Fish Restoration Act (CFDA #15.605), Wildlife Restoration Act (CFDA #15.611), Endangered Species Act (CFDA #15.612 and 15.615), Coastal Wetlands Planning Protection and Restoration Act (CFDA #15.614), and Clean Vessel Act of 1992 (CFDA #15.616).

(2) Program Information and NEPA Compliance. Information on how State, local, and private entities may request funds and assist the Service in NEPA compliance relative to the Anadromous Fish Conservation Act may be obtained through the Division of Fish and Wildlife Management Assistance, U.S. Fish and Wildlife Service, Department of the Interior, Arlington Square Building, Room 840, Washington, D.C. 20240. Similar information regarding the North American Wetlands Conservation Act may be obtained through the North American Waterfowl and Wetlands Office. U.S. Fish and Wildlife Service, Department of the Interior, Arlington Square Building, Room 110, Washington, D.C. 20240. All other requests for information on how funds may be obtained and guidance on how to assist the Service in NEPA compliance may be obtained through the Chief, Division of Federal Aid, U.S. Fish and Wildlife Service, Department of the Interior, Arlington Square Building, Room 140, Washington, D.C. 20240.

8.5 Categorical Exclusions

Categorical exclusions are classes of actions which do not individually or cumulatively have a significant effect on the human environment. Categorical exclusions are not the equivalent of statutory exemptions. If exceptions to categorical exclusions apply, under 516 DM 2, Appendix 2 of the Departmental Manual, the departmental categorical exclusions cannot be used. In addition to the actions listed in the departmental categorical exclusions outlined in Appendix 1 of 516 DM 2, the following Service actions are designated categorical exclusions unless the action is an exception to the categorical exclusion.

A. General.

(1) Changes or amendments to an approved action when such changes have no or minor potential environmental impact.

(2) Personnel training, environmental interpretation, public safety efforts, and other educational activities, which do not involve new construction or major additions to existing facilities.

(3) The issuance and modification of procedures, including manuals, orders, guidelines, and field instructions, when the impacts are limited to administrative effects.

(4) The acquisition of real property obtained either through discretionary acts or when acquired by law, whether by way of condemnation, donation, escheat, right-of-entry, escrow, exchange, lapses, purchase, or transfer and that will be under the jurisdiction or control of the United States. Such acquisition of real property shall be in accordance with 602 DM 2 and the Service's procedures, when the acquisition is from a willing seller, continuance of or minor modification to the existing land use is planned, and the acquisition planning process has been performed in coordination with the affected public.

B. Resource Management. Prior to carrying out these actions, the Service should coordinate with affected Federal agencies and State, Tribal, and local governments.

(1) Research, inventory, and information collection activities directly related to the conservation of fish and wildlife resources which involve negligible animal mortality or habitat destruction, no introduction of contaminants, or no introduction of organisms not indigenous to the affected ecosystem.

(2) The operation, maintenance, and management of existing facilities and routine recurring management activities and improvements, including renovations and replacements which result in no or only minor changes in the use, and have no or negligible environmental effects on-site or in the vicinity of the site.

(3) The construction of new, or the addition of, small structures or improvements, including structures and improvements for the restoration of wetland, riparian, instream, or native habitats, which result in no or only minor changes in the use of the affected local area. The following are examples of activities that may be included.

(a) The installation of fences.

(b) The construction of small water control structures.

(c) The planting of seeds or seedlings and other minor revegetation actions.

(d) The construction of small berms or dikes.

(e) The development of limited access for routine maintenance and management purposes.

(4) The use of prescribed burning for habitat improvement purposes, when conducted in accordance with local and State ordinances and laws.

(5) Fire management activities, including prevention and restoration measures, when conducted in accordance with departmental and Service procedures.

(6) The reintroduction or supplementation (*e.g.*, stocking) of native, formerly native, or established species into suitable habitat within their historic or established range, where no or negligible environmental disturbances are anticipated.

(7) Minor changes in the amounts or types of public use on Service or State-managed lands, in accordance with existing regulations, management plans, and procedures.

(8) Consultation and technical assistance activities directly related to the conservation of fish and wildlife resources.

(9) Minor changes in existing master plans, comprehensive conservation plans, or operations, when no or minor effects are anticipated. Examples could include minor changes in the type and location of compatible public use activities and land management practices.

(10) The issuance of new or revised site, unit, or activity-specific management plans for public use, land use, or other management activities when only minor changes are planned. Examples could include an amended public use plan or fire management plan.

(11) Natural resource damage assessment restoration plans, prepared under sections 107, 111, and 122(j) of the Comprehensive Environmental Response Compensation and Liability Act (CERCLA); section 311(f)(4) of the Clean Water Act; and the Oil Pollution Act; when only minor or negligible

change in the use of the affected areas is planned.

C. Permit and Regulatory Functions.

(1) The issuance, denial, suspension, and revocation of permits for activities involving fish, wildlife, or plants regulated under 50 CFR Chapter 1, Subsection B, when such permits cause no or negligible environmental disturbance. These permits involve endangered and threatened species, species listed under the Convention on International Trade in Endangered Species of Wild Fauna and Flora (CITES), marine mammals, exotic birds, migratory birds, eagles, and injurious wildlife.

(2) The issuance of ESA section 10(a)(1)(B) ''low-effect'' incidental take permits that, individually or cumulatively, have a minor or negligible effect on the species covered in the habitat conservation plan.

(3) The issuance of special regulations for public use of Service-managed land, which maintain essentially the permitted level of use and do not continue a level of use that has resulted in adverse environmental effects.

(4) The issuance or reissuance of permits for limited additional use of an existing right-of-way for underground or above ground power, telephone, or pipelines, where no new structures (*i.e.*, facilities) or major improvement to those facilities are required; and for permitting a new right-of-way, where no or negligible environmental disturbances are anticipated.

(5) The issuance or reissuance of special use permits for the administration of specialized uses, including agricultural uses, or other economic uses for management purposes, when such uses are compatible, contribute to the purposes of the refuge system unit, and result in no or negligible environmental effects.

(6) The denial of special use permit applications, either initially or when permits are reviewed for renewal, when the proposed action is determined not compatible with the purposes of the refuge system unit.

(7) Activities directly related to the enforcement of fish and wildlife laws, not included in 516 DM 2, Appendix 1.4. These activities include:

(a) Assessment of civil penalties.

(b) Forfeiture of property seized or subject to forfeiture.

(c) The issuance or reissuance of rules, procedures, standards, and permits for the designation of ports, inspection, clearance, marking, and license requirements pertaining to wildlife and wildlife products, and for the humane and healthful transportation of wildlife.

(8) Actions where the Service has concurrence or coapproval with another agency and the action is a categorical exclusion for that agency. This would normally involve one Federal action or connected actions where the Service is a cooperating agency.

D. Recovery Plans. Issuance of recovery plans under section 4(f) of the ESA.

E. Financial Assistance.

(1) State, local, or private financial assistance (grants and/or cooperative agreements), including State planning grants and private land restorations, where the environmental effects are minor or negligible.

(2) Grants for categorically excluded actions in paragraphs A, B, and C, above; and categorically excluded actions in Appendix 1 of 516 DM 2.

8.6 Actions Normally Requiring an EA

A. Proposals to establish most new refuges and fish hatcheries; and most additions and rehabilitations to existing installations.

B. Any habitat conservation plan that does not meet the definition of ''low-effect'' in the Section 10(a)(1)(B) Handbook.

C. If, for any of the above proposals, the EA determines that the proposal is a major Federal action significantly affecting the quality of the human environment, an EIS will be prepared. The determination to prepare an EIS will be made by a notice of intent in the **Federal Register** and by other appropriate means to notify the affected public.

8.7 Major Actions Normally Requiring an EIS

A. The following Service proposals, when determined to be a major Federal action significantly affecting the quality of the human environment, will normally require the preparation of an EIS.

(1) Major proposals establishing new refuge system units, fish hatcheries, or major additions to existing installations, which involve substantive conflicts over existing State and local land use, significant controversy over the environmental effects of the proposal, or the remediation of major on-site sources of contamination.

(2) Master or comprehensive conservation plans for major new installations, or for established installations, where major new developments or substantial changes in management practices are proposed.

B. If, for any of the above proposals it is initially determined that the proposal is not a major Federal action significantly affecting the quality of the human environment, an EA will be prepared and handled in accordance with 40 CFR 1501.4(e)(2). If the EA subsequently indicates the proposed action will cause significant impacts, an EIS will be prepared.

Department of the Interior

Departmental Manual

Effective Date:
Series: Environmental Quality
Part 516: National Environmental Policy Act of 1969
Chapter 9: Managing the NEPA Process—Geological Survey
Originating Office: Office of Environmental Policy and Compliance

516 DM 9

9.1 Purpose

This Chapter provides supplementary requirements for implementing provisions of 516 DM 1 through 6 within the Department's Geological Survey. This Chapter is referenced in 516 DM 6.5.

9.2 NEPA Responsibility

A. The Director of the U.S. Geological Survey (USGS) is responsible for National Environmental Policy Act (NEPA) compliance for USGS activities.

B. The Assistant Director for Engineering Geology produces policy guidance, direction and oversight for environmental activities including implementation of NEPA, and approves Environmental Impact Statements (EIS) prepared by the USGS. The Assistant Director is also responsible for approving USGS reviews of environmental documents, regulations or rules proposed by other agencies.

C. The Chief, Environmental Affairs Progam (Reston, VA), is the focal point for NEPA matters and develops NEPA-related policy and guidance for the USGS. The Chief is responsible for: assuring the quality control of USGS environmental documents; monitoring USGS-wide activities to ensure NEPA compliance, reviewing and commenting on other bureaus' and agencies' environmental documents; managing the assignment of USGS personnel to assist other agencies in developing EISs; and assisting in the performance of specialized studies to support environmental analyses. Information about USGS environmental documents or the NEPA process can be obtained by contacting the Environmental Affairs Program.

D. The Chiefs of the Divisions or Independent Offices are responsible within their respective organizations for ensuring compliance with NEPA and applicable consultation requirements.

9.3 Guidance to Applicants

Because the USGS does not have any regulatory responsibilities in this area, the USGS has no applicable programs requiring guidance to applicants.

9.4 Actions Normally Requiring an EIS or Environmental Assessment (EA)

A. Approval of construction of major new USGS research centers or test facilities normally will require the preparation of an EIS.

B. An EA will be prepared to aid in deciding whether a finding of no significant impact is appropriate, or whether an EIS is required prior to implementing any action. The EA will be prepared in accordance with guidance provided in 516 DM 3.1. Specifically, an EA is required for all actions which are: (a) Not categorically excluded; (b) listed as exceptions to the Departmental categorical exclusions in 516 DM 2 Appendix 2; (c) not being addressed by an EIS.

9.5 Categorical Exclusions

In addition to the actions listed in the Departmental categorical exclusions specified in Appendix 1 of 516 DM 2, many of which the USGS also performs, the following USGS actions are designated categorical exclusions unless the action qualifies as an exemption from the Department's categorical exclusions under Appendix 2 of 516 DM 2. The exclusions shall apply to internal program initiatives performed in the United States and its Trust Territories and Possessions. including Federal lands and the Outer Continental Shelf (OCS).

A. Topographic, land use and land cover, geological, mineralogic, resources evaluation, and hydrologic mapping activities, including aerial topographic surveying, photography, and geophysical surveying.

B. Collation of data and samples for geologic, paleontologic, hydrologic, mineralogic, geochemical and surface or subsurface geophysical investigations, and resource evaluation, including contracts therefor.

C. Acquisition of existing geological, hydrological or geophysical data from private exploration ventures.

D. Well logging, aquifer response testing, digital modeling, inventory of existing wells and water supplies, water-sample collection.

E. Operation, construction and installation of: (a) Water-level or waterquality recording devices in wells; (b) pumps in wells; (c) surface-water flow measuring equipment such as weirs and stream-gaging stations, and (d) telemetry systems, including contracts therefor.

F. Routine exploratory or observation groundwater well drilling operations which do not require a special access road, and which use portable tanks to recycle and remove drilling mud, and create no significant surface disturbance.

G. Test or exploration drilling and downhole testing, including contracts therefor.

H. Establishment of survey marks, placement and operation of field instruments, and installation of any research/monitoring devices.

I. Digging of exploratory trenches requiring less than 20 cubic yards of excavation.

J. Establishment of seasonal and temporary field camps.

K. Off-road travel to drilling, data collection or observation sites which does not impact ecologically sensitive areas such as wilderness areas, wetlands, or areas of critical habitat for listed endangered or threatened species.

L. Hydraulic fracturing of rock formations for the singular purpose of in situ stress measurements.

M. Reports to Surface Management Agencies, or any State, Territorial, Commonwealth or Federal Agencies concerning mineral and water resources appraisals.

N. Other actions where USGS has concurrence or coapproval with another Department of the Interior bureau and the action is a categorical exclusion for that bureau.

O. Minor, routine, or preventive maintenance activities at USGS facilities and lands, and geological, hydrological, or geophysical data collection stations.

P. Minor activities required to gain or prepare access to sites selected for completion of exploration drilling operations or construction of stations for hydrologic, geologic, or geophysical data collection.

Department of the Interior

Departmental Manual

Effective Date:
Series: Environmental Quality
Part 516: National Environmental Policy Act of 1969
Chapter 10: Managing the NEPA Process—Bureau of Indian Affairs
Originating Office: Office of Environmental Policy and Compliance

516 DM 10

10.1 Purpose

This Chapter provides supplementary requirements for implementing provisions of 516 DM 1 through 6 within the Department's Bureau of Indian Affairs. This Chapter is referenced in 516 DM 6.5.

10.2 NEPA Responsibility

A. Deputy Commissioner of Indian Affairs is responsible for NEPA compliance of Bureau of Indian Affairs (BIA) activities and programs.

B. Director, Office of Trust Responsibilities (OTR) is responsible for oversight of the BIA program for achieving compliance with NEPA, program direction, and leadership for BIA environmental policy, coordination and procedures.

C. Environmental Services Staff, reports to the Director (OTR). This office is the Bureau-wide focal point for overall NEPA policy and guidance and is responsible for advising and assisting Area Offices, Agency Superintendents, and other field support personnel in their environmental activities. The office also provides training and acts as the Central Office's liaison with Indian tribal governments on NEPA and other environmental compliance matters. Information about BIA NEPA documents or the NEPA process can be obtained by contacting the Environmental Services Staff.

D. Other Central Office Directors and Division Chiefs are responsible for ensuring that the programs and activities within their jurisdiction comply with NEPA.

E. Area Directors and Project Officers are responsible for assuring NEPA compliance with all activities under their jurisdiction and providing advice and assistance to Agency Superintendents and consulting with the Indian tribes on environmental matters related to NEPA. Area Directors and Project Officers are also responsible for assigning sufficient trained staff to ensure NEPA compliance is carried out. An Environmental Coordinator is located at each Area Office.

F. Agency Superintendents and Field Unit Supervisors are responsible for NEPA compliance and enforcement at the Agency or field unit level.

10.3 Guidance to Applicants and Tribal Governments

A. Relationship with Applicants and Tribal Governments.

(1) Guidance to Applicants.

(a) An ''applicant'' is an entity which proposes to undertake any activity which will at some point require BIA action. These may include tribal governments, private entities, state and local governments or other Federal agencies. BIA compliance with NEPA is Congressionally mandated. Compliance is initiated when a BIA action is necessary in order to implement a proposal.

(b) Applicants should contact the BIA official at the appropriate level for

assistance. This will be the Agency Superintendent, Area Director or the Director, Office of Trust Responsibilities.

(c) If the applicant's proposed action will affect or involve more than one tribal government, one government agency, one BIA Agency, or where the action may be of State-wide or regional significance, the applicant should contact the respective Area Director(s). The Area Director(s), using sole discretion, may assign the lead NEPA compliance responsibilities to one Area Office or, as appropriate, to one Agency Superintendent. From that point, the Applicant will deal with the designated lead office.

(d) Since much of the applicant's planning may take place outside the BIA system, it is the applicant's responsibility to prepare a milestone chart for BIA use at the earliest possible stage in order to coordinate the efforts of both parties. Early communication with the responsible BIA office will expedite determination of the appropriate type of NEPA documentation required. Other matters such as the scope, depth and sources of data for an environmental document will also be expedited and will help lead to a more efficient and more timely NEPA compliance process.

(2) Guidance to Tribal Governments.

(a) Tribal governments may be applicants, and/or be affected by a proposed action of BIA or another Federal agency. Tribal governments affected by a proposed action shall be consulted during the preparation of environmental documents and, at their option, may cooperate in the review or preparation of such documents. Notwithstanding the above, the BIA retains sole responsibility and discretion in all NEPA compliance matters.

(b) Any proposed tribal actions that do not require BIA or other Federal approval, funding or ''actions'' are not subject to the NEPA process.

B. Prepared Program Guidance. BIA has implemented regulations for environmental guidance for surface mining in 25 CFR Part 216 (Surface Exploration, Mining and Reclamation of Lands.) Environmental guidance for Forestry activities is found in 25 CFR 163.27 and 53 BIAM Supplements 2 and 3.

C. Other Guidance. Programs under 25 CFR for which BIA has not yet issued regulations or directives for environmental information for applicants are listed below. These programs may or may not require environmental documents and could involve submission of applicant information to determine NEPA applicability. Applicants for these types of programs should contact the appropriate BIA office for information and assistance:

(1) Partial payment construction charges on Indian irrigation projects (25 CFR Part 134).

(2) Construction assessments, Crow Indian irrigation project (25 CFR Part 135).

(3) Fort Hall Indian irrigation project, Idaho (25 CFR Part 136).

(4) Reimbursement of construction costs, San Carlos Indian irrigation project, Arizona (25 CFR Part 137).

(5) Reimbursement of construction costs, Ahtanum Unit, Wapato Indian irrigation project, Washington CFR Part 138).

(6) Reimbursement of construction costs, Wapato-Satus Unit, Wapato Indian Irrigation project, Washington (25 CFR Part 139).

(7) Land acquisitions (25 CFR Part 151).

(8) Leasing and permitting (Lands) (25 CFR Part 162).

(9) Sale of lumber and other forest products produced by Indian enterprises from the forests on Indian reservation (25 CFR Part 164).

(10) Sale of forest products, Red Lake Indian Reservation, Minn. (25 CFR Part 165).

(11) General grazing regulations (25 CFR Part 166).

(12) Navajo grazing regulations (25 CFR Part 167).

(13) Grazing regulations for the Hopi partitioned lands (25 CFR Part 168).

(14) Rights-of-way over Indian lands (25 CFR Part 169).

(15) Roads of the Bureau of Indian Affairs (25 CFR Part 170).

(16) Concessions, permits and leases on lands withdrawn or acquired in connection with Indian irrigation projects (25 CFR Part 173).

(17) Indian Electric Power Utilities (25 CFR Part 175).

(18) Resale of lands within the badlands Air Force Gunnery Range (Pine Ridge Aerial Gunnery Range) (25 CFR Part 178).

(19) Leasing of tribal lands for mining (25 CFR Part 211).

(20) Leasing of allotted lands for mining (25 CFR Part 212).

(21) Leasing of restricted lands of members of Five Civilized Tribes, Oklahoma, for mining (25 CFR Part 213).

(22) Leasing of Osage Reservation lands, Oklahoma, for mining, except oil and gas (25 CFR Part 214).

(23) Lead and zinc mining operations and leases, Quapaw Agency (25 CFR Part 215).

(24) Leasing of Osage Reservation lands for oil and gas mining (25 CFR Part 226).

(25) Leasing of certain lands in Wind River Indian Reservation, Wyoming, for oil and gas mining (25 CFR Part 227).

(26) Indian fishing in Alaska (25 CFR Part 241).

(27) Commercial fishing on Red Lake Indian Reservation (25 CFR 242).

(28) Use of Columbia River in-lieu fishing sites (25 CFR Part 248).

(29) Off-reservation treaty fishing (25 CFR Part 249).

(30) Indian fishing—Hoopa Valley Indian Reservation (25 CFR Part 150).

(31) Housing Improvement Program (25 CFR Part 256).

(32) Contracts under Indian Self-Determination Act (25 CFR Part 271).

(33) Grants under Indian Self-Determination Act 25 CFR Part 272).

(34) School construction or services for tribally operated previously private schools (25 CFR Part 274).

(35) Uniform administration requirements for grants (25 CFR 276).

(36) School construction contracts for public schools (25 CFR Part 277).

10.4 Major Actions Normally Requiring an EIS

A. The following BIA actions normally require the preparation of an Environmental Impact Statement (EIS):

(1) Proposed mining contracts (for other than oil and gas), or the combination of a number of smaller contracts comprising a mining unit for:

(a) New mines of 640 acres or more, other than surface coal mines.

(b) New surface coal mines of 1,280 acres or more, or having an annual full production level of 5 million tons or more.

(2) Proposed water development projects which would, for example, inundate more than 1,000 acres, or store more than 30,000 acre-feet, or irrigate more than 5,000 acres of undeveloped land.

(3) Construction of a treatment, storage or disposal facility for hazardous waste or toxic substances.

(4) Construction of a solid waste facility for commercial purposes.

B. If, for any of these actions, it is proposed not to prepare an EIS, an Environmental Assessment (EA) will be developed in accordance with 40 CFR 1501.4(a)(2).

10.5 Categorical Exclusions

In addition to the actions listed in the Department's categorical exclusions in Appendix 1 of 516 DM 2, many of which the BIA also performs, the following BIA actions are hereby designated as categorical exclusions

unless the action qualifies as an exception under Appendix 2 of 516 DM 2. These activities are single, independent actions not associated with a larger, existing or proposed, complex or facility. If cases occur that involve larger complexes or facilities, an EA or supplement should be accomplished.

A. Operation, maintenance, and replacement of existing facilities. Examples are normal renovation of buildings, road maintenance and limited rehabilitation of irrigation structures.

B. Transfer of Existing Federal Facilities to Other Entities. Transfer of existing operation and maintenance activities of Federal facilities to tribal groups, water user organizations, or other entities where the anticipated operation and maintenance activities are agreed to in a contract, follow BIA policy, and no change in operations or maintenance is anticipated.

C. Human resources programs. Examples are social services, education services, employment assistance, tribal operations, law enforcement and credit and financing activities not related to development.

D. Administrative actions and other activities relating to trust resources. Examples are: Management of trust funds (collection and distribution), budget, finance, estate planning, wills and appraisals.

E. Self-Determination and Self-Governance.

(1) Self-Determination Act contracts and grants for BIA programs listed as categorical exclusions, or for programs in which environmental impacts are adequately addressed in earlier NEPA analysis.

(2) Self-Governance compacts for BIA programs which are listed as categorical exclusions or for programs in which environmental impacts are adequately addressed in earlier NEPA analysis.

F. Rights-of-Way.

(1) Rights-of-Way inside another right-of-way, or amendments to rights-of-way where no deviations from or additions to the original right-of-way are involved and where there is an existing NEPA analysis covering the same or similar impacts in the right-of-way area.

(2) Service line agreements to an individual residence, building or well from an existing facility where installation will involve no clearance of vegetation from the right-of-way other than for placement of poles, signs (including highway signs), or buried power/cable lines.

(3) Renewals, assignments and conversions of existing rights-of-way where there would be essentially no change in use and continuation would not lead to environmental degradation.

G. Minerals.

(1) Approval of permits for geologic mapping, inventory, reconnaissance and surface sample collecting.

(2) Approval of unitization agreements, pooling or communitization agreements.

(3) Approval of mineral lease adjustments and transfers, including assignments and subleases.

(4) Approval of royalty determinations such as royalty rate adjustments of an existing lease or contract agreement.

H. Forestry.

(1) Approval of free-use cutting, without permit, to Indian owners for on-reservation personal use of forest products, not to exceed 2,500 feet board measure when cutting will not adversely affect associated resources such as riparian zones, areas of special significance, etc.

(2) Approval and issuance of cutting permits for forest products not to exceed $5,000 in value.

(3) Approval and issuance of paid timber cutting permits or contracts for products valued at less than $25,000 when in compliance with policies and guidelines established by a current management plan addressed in earlier NEPA analysis.

(4) Approval of annual logging plans when in compliance with policies and guidelines established by a current management plan addressed in earlier NEPA analysis.

(5) Approval of Fire Management Planning Analysis detailing emergency fire suppression activities.

(6) Approval of emergency forest and range rehabilitation plans when limited to environmental stabilization on less than 10,000 acres and not including approval of salvage sales of damaged timber.

(7) Approval of forest stand improvement projects of less than 2000 acres when in compliance with policies and guidelines established by a current management plan addressed in earlier NEPA analysis.

(8) Approval of timber management access skid trail and logging road construction when consistent with policies and guidelines established by a current management plan addressed in earlier NEPA analysis.

(9) Approval of prescribed burning plans of less than 2000 acres when in compliance with policies and guidelines established by a current management plan addressed in earlier NEPA analysis.

(10) Approval of forestation projects with native species and associated protection and site preparation activities on less than 2000 acres when consistent with policies and guidelines established by a current management plan addressed in earlier NEPA analysis.

I. Land Conveyance and Other Transfers. Approvals or grants of conveyances and other transfers of interests in land where no change in land use is planned.

J. Reservation Proclamations. Lands established as or added to a reservation pursuant to 25 U.S.C. 467, where no change in land use is planned.

K. Waste Management.

(1) Closure operations for solid waste facilities when done in compliance with other federal laws and regulations and where cover material is taken from locations which have been approved for use by earlier NEPA analysis.

(2) Activities involving remediation of hazardous waste sites if done in compliance with applicable federal laws such as the Resource Conservation and Recovery Act (P.L. 94–580), Comprehensive Environmental Response, Compensation, and Liability Act (P.L. 96–516) or Toxic Substances Control Act (P.L. 94–469).

L. Roads and Transportation.

(1) Approval of utility installations along or across a transportation facility located in whole within the limits of the roadway right-of-way.

(2) Construction of bicycle and pedestrian lanes and paths adjacent to existing highways and within the existing rights-of-way.

(3) Activities included in a ''highway safety plan'' under 23 CFR 402.

(4) Installation of fencing, signs, pavement markings, small passenger shelters, traffic signals, and railroad warning devices where no substantial land acquisition or traffic disruption will occur.

(5) Emergency repairs under 23 U.S.C. 125.

(6) Acquisition of scenic easements.

(7) Alterations to facilities to make them accessible for the elderly or handicapped.

(8) Resurfacing a highway without adding to the existing width.

(9) Rehabilitation, reconstruction or replacement of an existing bridge structure on essentially the same alignment or location (e.g. widening, adding shoulders or safety lanes, walkways, bikeways or guardrails).

(10) Approvals for changes in access control within existing right-of-ways.

(11) Road construction within an existing right-of-way which has already been acquired for a HUD housing project and for which earlier NEPA analysis has already been prepared.

M. Other.

(1) Data gathering activities such as inventories, soil and range surveys, timber cruising, geological, geophysical, archeological, paleontological and cadastral surveys.

(2) Establishment of non-disturbance environmental quality monitoring programs and field monitoring stations including testing services.

(3) Actions where BIA has concurrence or co-approval with another Bureau and the action is categorically excluded for that Bureau.

(4) Approval of an Application for Permit to Drill for a new water source or observation well.

(5) Approval of conversion of an abandoned oil well to a water well if water facilities are established only near the well site.

(6) Approval and issuance of permits under the Archaeological Resources Protection Act (16 U.S.C. 470aa-ll) when the permitted activity is being done as a part of an action for which a NEPA analysis has been, or is being prepared.

Department of the Interior

Departmental Manual

Effective Date:
Series: Environmental Quality
Part 516: National Environmental Policy Act of 1969
Chapter 11: Managing the NEPA Process—Bureau of Land Management
Originating Office: Office of Environmental Policy and Compliance

516 DM 11

11.1 Purpose

This Chapter provides supplementary requirements for implementing provisions of 516 DM 1 through 6 within the Department's Bureau of Land Management. This Chapter is referenced in 516 DM 6.5.

11.2 NEPA Responsibility

A. The Director/Deputy Director are responsible for National Environmental Policy Act compliance for Bureau of Land Management activities.

B. The Assistant Director, Support Services, is responsible for policy interpretation, program direction, leadership, and line management for Bureau environmental policy, coordination and procedures. The Division of Planning and Environmental Coordination (P&EC) which reports to the Assistant Director, Support Services, has Bureauwide environmental compliance responsibilities. These reponsibilities include program direction for environmental compliance and ensuring the incorporation and integration of the NEPA compliance process into Bureau environmental documents.

C. The Assistant Directors, Renewable Resources, Energy and Minerals Resources, and Management Services are responsible for cooperating with the Assistant Director, Support Services, to ensure that the environmental compliance process operates as prescribed within their areas of responsibility. This includes managing and ensuring the quality of environmental analyses, assigned environmental documents and records of decisions.

D. The State Directors are responsible to the Director/Deputy Director for overall direction and integration of the NEPA process into their activities and for NEPA compliance in their States. The P&EC unit provides major staff support and is the key focal point for NEPA matters at the State level.

(1) The District Managers are responsible for implementing the NEPA process at the District level. The P&EC unit provides major support and is the key focal point for NEPA matters at the District level.

(2) The Area Managers are responsible for implementing the NEPA process at the resource area level.

11.3 Guidance to Applicants

A. General.

(1) Applicants should make initial contact with the line manager (Area Manager, District Manager or State Director) of the office where the affected public lands are located.

(2) If the application will affect responsibilities of more than one State Director, an applicant may contact any State Director whose jurisdiction is involved. In such cases, the Director may assign responsibility to the Headquarters Office or to one of the State offices. From that point, the applicant will deal with the designated lead office.

(3) Potential applicants may secure from State Directors a list of program regulations or other directives/guidance providing advice or requirements for submission of environmental information. The purpose of making these regulations known to potential applicants, in advance, is to assist them in presenting a detailed, adequate and accurate description of the proposal and alternatives when they file their application and to minimize the need to request additional information. This is a minimum list and additional requirements may be identified after detailed review of the formal submission and during scoping.

(4) Since much of an applicant's planning may take place outside of BLM's planning system, it is important for potential applicants to advise BLM of their planning at the earliest possible stage. Early communication is necessary to properly conduct our stewardship role on the public lands and to seek solutions to situations where private development decisions may conflict with public land use decisions. Early contact will also allow the determination of basic data needs concerning environmental amenities and values, potential data gaps that could be filled by the application, and a modification of the list or requirements to fit local situations. Scheduling of the environmental analysis process can also be discussed, as well as various ways of preparing any environmental documents.

B. Regulations. The following partial list provides guidance to applicants on program regulations which may apply to a particular application. Many other regulations deal with proposals affecting public lands, some of which are specific to BLM while others are applicable across a broad range of Federal programs (*e.g.,* Protection of Historic and Cultural Programs—36 CFR part 800).

(1) Resource Management Planning—43 CFR 1610;

(2) Withdrawals—43 CFR 2300;

(3) Land Classification—43 CFR 2400;

(4) Disposition: Occupancy and Use—43 CFR 2500;

(5) Disposition: Grants—43 CFR 2600;

(6) Disposition: Sales—43 CFR 2700;

(7) Use: Rights-of-Way—43 CFR 2800;

(8) Use: Leases and Permits—43 CFR 2900;

(9) Oil and Gas Leasing—43 CFR 3100;

(10) Geothermal Resources Leasing—43 CFR 3200;

(11) Coal Management—43 CFR 3400;

(12) Leasing of Solid Minerals Other than Coal/Oil Shale—43 CFR 3500;

(13) Mineral Materials Disposal—43 CFR 3600;

(14) Mining Claims Under the General Mining Laws—43 CFR 3800;

(15) Grazing Administration—43 CFR 4100;

(16) Wild Free-Roaming Horse and Burro Management—43 CFR 4700;

(17) Forest Management—43 CFR 5000;

(18) Wildlife Management—43 CFR 6000; and

(19) Recreation Management—43 CFR 8300.

11.4 Major Actions Normally Requiring an EIS

A. The following types of Bureau actions will normally require the preparation of an EIS:

(1) Approval of Resource Management Plans.

(2) Proposals for Wilderness, Wild and Scenic Rivers, and National Historic Scenic Trails.

(3) Approval of regional coal lease sales in a coal production reason.

(4) Decision to issue a coal preference right lease.

(5) Approval of applications to the BLM for major actions in the following categories:

(a) Sites for steam electric powerplants, petroleum refineries, synfuel plants, and industrial facilities.

(b) Rights-of-way for major reservoirs, canals, pipelines, transmission lines, highways and railroads.

(6) Approval of operations that would result in liberation of radioactive tracer materials or nuclear stimulation.

(7) Approval of any mining operation where the area to be mined, including any area of distrubance, over the life of the mining plan is 640 acres or larger in size.

B. If, for any of these actions it is anticipated that an EIS is not needed based on potential Impact significance, an environmental assessment will be prepared and processed in accordance with 40 CFR 1501.4(e)(2).

11.5 Categorical Exclusions

The Departmental Manual [516 DM 2.3A(3) & Appx 2] requires that before any action described in the following list of categorical exclusions is used, the exceptions must be reviewed for applicability in each case. The proposed action cannot be categorically excluded if one or more of the exceptions apply, thus requiring either an EA or on EIS. When no exceptions apply, the following types or bureau actions normally do not require the preparation of an EA or EIS.

A. Fish and Wildlife.

(1) Modification of existing fences to provide improved wildlife ingress and egress.

(2) Minor modification of water developments to improve or facilitate wildlife use (*e.g.* modify enclosure fence, install flood value, or reduce ramp access angle).

(3) Construction of perches, nesting platforms, islands and similar structures for wildlife use,

(4) Temporary emergency feeding of wildlife during periods of extreme adverse weather conditions.

(5) Routine augmentations such as fish stocking, providing no new species are introduced.

(6) Relocation of nuisance or depredating wildlife, providing the relocation does not introduce new species into the ecosystem.

(7) Installation of devices on existing facilities to protect animal life such as raptor electrocution prevention devices.

B. Fluid Minerals.

(1) Issuance of future interest leases under the Mineral Leasing Act of Acquired Lands where the subject lands are already in production.

(2) Approval of mineral lease adjustments and transfers, including assignments and subleases.

(3) Approval of minor modifications or minor variances from activities described in approved development/production plans (*e.g.* the approved plan identifies no new surface disturbance outside the area already identified to be disturbed).

(4) Approval of unitization agreements, communitization agreements, drainage agreements, underground gas storage agreements, compensatory royalty agreements, or development contracts.

(5) Approval of suspensions of operations, *force majeure* suspensions, and suspensions of operations and production.

(6) Approval of royalty determinations such as royalty rate reductions.

C. Forestry.

(1) Land cultivation and silvicultural activities (excluding herbicides) in forest tree nurseries, seed orchards, and progeny test sites.

(2) Sale and removal of individual trees or small groups of trees which are dead, diseased, injured, or which constitute a safety hazard, and where access for the removal requires no more than maintenance to existing roads.

(3) Seeding or reforestation of timber sales or burn areas where no chaining is done, no pesticides are used, and there is no conversion of timber type or conversion of nonforest to forest land. Specific reforestation activities covered include: seeding and seedling plantings, shading, tubing (browse protection), paper mulching, bud caps, ravel protection, application of non-toxic big game repellant, spot scalping, rodent trapping, fertilization of seed trees, fence construction around out-planting sites, and collection of pollen, scions and cones.

(4) Precommercial thinning and brush control using small mechanical devices.

(5) Disposal of small amounts of miscellaneous vegetation products outside established harvest areas, such as Christmas trees, wildings, floral products (ferns, boughs, etc.), cones, seeds, and personal use firewood.

D. Rangeland Management.

(1) Approval of transfers of grazing preference.

(2) Placement and use of temporary (not to exceed one month) portable corrals and water troughs, providing no new road construction is needed.

(3) Temporary emergency feeding of livestock or wild horses and burros during periods of extreme adverse weather conditions.

(4) Removal of wild horses or burros from private lands at the request of the landowner.

(5) Processing (transporting, sorting, providing veterinary care to, vaccinating, testing for communicable diseases, training, gelding, marketing, maintaining, feeding, and trimming of hooves of) excess wild horses and burros.

(6) Approval of the adoption of healthy, excess wild horses and burros.

(7) Actions required to ensure compliance with the terms of Private Maintenance and Care Agreements.

(8) Issuance of title to adopted wild horses and burros.

(9) Destroying old, sick, and lame wild horses and burros as an act of mercy.

E. Realty.

(1) Withdrawal extensions or modifications which only establish a new time period and entail no changes in segregative effect or use.

(2) Withdrawal revocations, terminations, extensions, or modifications and classification terminations or modifications which do not result in lands being opened or closed to the general land laws or to the mining or mineral leasing laws.

(3) Withdrawal revocations, terminations, extensions, or modifications; classification terminations or modifications; or opening actions where the land would be opened only to discretionary land laws and where subsequent discretionary actions (prior to implementation) an in conformance with and are covered by a Resource Management Plan/EIS (or plan amendment and EA or EIS).

(4) Administrative conveyances from the Federal Aviation Administration (FAA) to the State of Alaska to accommodate airports on lands appropriated by the FAA prior to the enactment of the Alaska Statehood Act.

(5) Actions taken in conveying mineral interest where there are no known mineral values in the land, under Section 209(b) of the Federal Land policy and Management Act of 1976 (FLPMA).

(6) Resolution of class one color-of-title cases.

(7) Issuance of recordable disclaimers of interest under Section 315 of FLPMA.

(8) Corrections of patents and other conveyance documents under section 316 of FLPMA and other applicable statutes.

(9) Renewals and assignments of leases, permits or rights-of-way where no additional rights are conveyed beyond those granted by the original authorizations.

(10) Transfer or conversion of leases, permits, or rights-of-way from one agency to another (*e.g.*, conversion of Forest Service permits to a BLM Title V Right-of-way).

(11) Conversion of existing right-of-way grants to Title V grants or existing leases to FLPMA section 302(b) leases where no new facilities or other changes are needed.

(12) Grants of right-of-way wholly within the boundaries of other compatibly developed rights-of-way.

(13) Amendments to existing rights-of-way such as the upgrading of existing facilities which entail no additional disturbances outside the rights-of-way boundary.

(14) Grants of rights-of-way for an overhead line (no pole or tower on BLM land) crossing over a corner of public land.

(15) Transfer of land or interest in land to or from other Bureaus or Federal agencies where current management will continue and future changes in management will be subject to the NEPA process.

(16) Acquisition of easements for an existing road or issuance of leases, permits, or rights-of-way for the use of existing facilities, improvements, or sites for the same or similar purposes.

(17) Grant of a short rights-of-way for utility service or terminal access roads to an individual residence, outbuilding, or water well.

(18) Temporary placement of a pipeline above ground.

(19) Issuance of short-term (3 years or less) rights-of-way or land use authorizations for such uses as storage sites, apiary sites, and construction sites where the proposal includes rehabilitation to restore the land to its natural or original condition.

(20) One-time issuance of short-term (3 years or less) rights-of-way or land use authorizations which authorize trespass action where no new use or construction is allowed, and where the proposal includes rehabilitation to restore the land to its natural or original condition.

F. Solid Minerals.

(1) Issuance of future interest leases under the Mineral Leasing Act for Acquired Lands where the subject lands are already in production.

(2) Approval of mineral lease readjustments, renewals and transfers including assignments and subleases.

(3) Approval of suspensions of operations, *force majeure* suspensions, and suspensions of operations and production.

(4) Approval of royalty determinations such as royalty rate reduction and operations reporting procedures.

(5) Determination and designation of logical mining units (LMUs).

(6) Findings of completeness furnished to the Office of Surface Mining Reclamation and Enforcement for Resource Recovery and Protection Plans.

(7) Approval of minor modifications to or minor variances from activities described in an approved exploration plan for leasable, salable and locatable minerals. (*e.g.* the approved plan identifies no new surface disturbance outside the areas already identified to be disturbed.)

(8) Approval of minor modifications to or minor variances from activities described in an approved underground or surface mine plan for leasable minerals. (*e.g.* change in mining sequence or timing.)

(9) Digging of exploratory trenches for mineral materials, except in riparian areas.

(10) Disposal of mineral materials such as sand, stone, gravel, pumice, pumicite, cinders, and clay, in amounts not exceeding 50,000 cubic yards or disturbing more than 5 acres, except in riparian areas.

G. Transportation Signs.

(1) Placing existing roads in any transportation plan when no new construction or upgrading is needed.

(2) Installation of routine signs, markers, culverts, ditches, waterbars, gates, or cattleguards on/or adjacent to existing roads.

(3) Temporary closure of roads.

(4) Placement of recreational, special designation or information signs, visitor registers, kiosks and portable sanitation devices.

H. Other.

(1) Maintaining plans in accordance with 43 CFR 1610.5–4.

(2) Acquisition of existing water developments (*e.g.* wells and springs) on public land.

(3) Conducting preliminary hazardous materials assessments and site investigations, site characterization studies and environmental monitoring. Included is siting, construction, installation and/or operation of small monitoring devices such as wells, particulate dust counters and automatic air or water samples.

(4) Use of small sites for temporary field work camps where the sites will be restored to their natural or original condition within the same work season.

(5) Issuance of special recreation permits to individuals or organized groups for search and rescue training, orienteering or similar activities and for dog trials, endurance horse races or similar minor events.

(6) A single trip in a one month period to data collection or observation sites.

(7) Construction of snow fences for safety purposes or to accumulate snow for small water facilities.

(8) Installation of minor devices to protect human life (*e.g.* grates across mines).

(9) Construction of small protective enclosures including those to protect reservoirs and springs and those to protect small study areas.

(10) Removal of structures and materials of nonhistorical value, such as abandoned automobiles, fences, and buildings, including those built in trespass and reclamation of the site when little or no surface disturbance is involved.

(11) Actions where BLM has concurrence or coapproval with another DOI agency and the action is categorically excluded for that DOI agency.

(12) Rendering formal classification of lands as to their mineral character and waterpower and water storage values.

Department of the Interior

Departmental Manual

Effective Date:
Series: Environmental Quality
Part 516: National Environmental Policy Act of 1969
Chapter 12: Managing the NEPA Process—National Park Service
Originating Office: Office of Environmental Policy and Compliance

516 DM 12

12.1 Purpose

This Chapter provides supplementary requirements for implementing provisions of 516 DM 1 through 6 within the Department's National Park Service. This Chapter is referenced in 516 DM 6.5.

12.2 NEPA Responsibility

A. The Director is responsible for NEPA compliance for National Park Service (NPS) activities.

B. Regional Directors are responsible to the Director for integrating the NEPA process into all regional activities and for NEPA compliance in their regions.

C. The Denver Service Center performs most major planning efforts for the National Park Service and integrates NEPA compliance and environmental considerations with project planning, consistent with direction and oversight

provided by the appropriate Regional Director.

D. The Environmental Compliance Division (Washington), which reports to the Associate Director—Planning and Development, serves as the focal point for all matters relating to NEPA compliance; coordinates NPS review of NEPA documents prepared by other agencies; and provides policy review and clearance for NPS EISs. Information concerning NPS NEPA documents or the NEPA process can be obtained by contacting this office.

12.3 Guidance to Applicants

Actions in areas of NPS jurisdiction that are initiated by private or non-Federal entities include the following:

A. Minerals, Mineral exploration, leasing and development activities are not permitted in most units of the National Park System. There are exceptions where mineral activities are authorized by law and all mineral activities conducted under these exceptions require consolation with and evaluation by officials of the NPS and are subject to NEPA compliance. Some procedures whereby mineral activities are authorized are outlined below. For site-specific proposals, interested parties should contact the appropriate NPS Regional Director for a determination of whether authorities for conducting other types of mineral activities in particular areas exist and, if so, how to obtain appropriate permits. For further information about NPS minerals policy, interested parties should contact the Energy, Mining, and Minerals Division (Denver, Colorado).

(1) Mining Claims and Associated Mining Operations. All Units of the National Park System are closed to mineral entry under the 1872 Mining Law, and mining operations associated with mining claims are limited to the exercise of valid prior existing rights. Prior to conducting mining operations on patented or unpatented mining claims within the National Park System, operators must obtain approval of the appropriate NPS Regional Director. The Regional Directors base approval on information submitted by potential operators that discusses the scope of the proposed operations, evaluates the potential impacts on park resources, identifies measures that will be used to mitigate adverse impacts, and meets other requirements contained in 36 CFR Part 9, Subpart A, which governs mining operations on mining claims under the authority of the Mining in the Parks Act of 1976.

(2) Non-Federal Mineral Rights. Privately held Oil, gas and mineral rights on private land or split estates (Federally-owned subsurface estate) exist within some park boundaries. Owners of outstanding subsurface oil and gas rights are granted reasonable access on or across park units through compliance with 36 CFR Part 9, Subpart B. These procedures require an operator to file a plan of operations for approval by the appropriate NPS Regional Director. An approved plan of operations serves as the operator's access permit.

(3) Federal Mineral Leasing and Mineral Operations.

(a) Leasing of Federally-owned minerals is restricted to five national recreation areas in the National Park System, where leasing is authorized in the enabling legislation of the units. According to current regulations (43 CFR 3100.03(g)(4); 43 CFR 3500.0–3(c)(7)). These areas are: Lake Mead, Glen Canyon, Ross Lake, Lake Chelan, and Whiskeytown National Recreation Areas. However, Lake Chelan was designated in 1981 as an excepted area under the regulations and is closed to mineral leasing. The Bureau of Land Management (BLM) issues leases on these lands and controls and monitors operations. Applicable general leasing and operating procedures for oil and gas are contained in 43 CFR Part 3100, *et seq.* And for minerals other than oil and gas in 43 CFR 3500 *et seq.* Within units of the National Park System the NPS, as the surface management agency, must consent to the permitting and leasing of park lands and concur with operating conditions established in consultation with the BLM. Leases and permits can only be granted upon a finding by the NPS Regional Director that the activities authorized will not have a significant adverse effect on the resources and administration of the unit. The NPS can also require special lease and permit stipulations for protecting the environment and other park resources. In addition, the NPS participates with BLM in preparing environmental analyses of all proposed activities and in establishing reclamation requirements for park unit lands.

(b) Glen Canyon National Recreation Area is the only unit of the National Park System containing special tar sands areas as defined in the Combined Hydrocarbon Leasing Act of 1981. In accordance with the requirements of this Act, the BLM has promulgated regulations governing the conversion of existing oil and gas leases located in special tar sands areas to combined hydrocarbon (oil, gas, and tar sands) leases and for instituting a competitive combined hydrocarbon leasing program in the special tar sands areas. Both of these activities, lease conversions and new leasing, may occur within the Glen Canyon NRA provided that they take place commensurate with the unit's minerals management plan and that the Regional Director of the NPS makes a finding of no significant adverse impact on the resources and administration of the unit or on other contiguous units of the National Park System. If the Regional Director does not make such a finding, then the BLM cannot authorize lease conversions or issue new leases within the Glen Canyon NRA. The applicable regulations are contained in 43 CFR 3140.7 and 3141.4–2, respectively. Intra-Departmental procedures for processing conversion applications have been laid out in a Memorandum of Understanding (MOU) between the BLM and the NPS. For additional information about combined hydrocarbon leasing, interested parties should contact the Energy, Mining and Minerals Division (Denver, Colorado).

B. Grazing. Grazing management plans for NPS units subject to legislatively-authorized grazing are normally prepared by the NPS or jointly with the BLM. Applicants for grazing allotments must provide the NPS and/or the BLM with such information as may be required to enable preparation of environmental documents on grazing management plans. Grazing is also permitted in some NPS areas as a condition of land acquisition in instances where grazing rights were held prior to Federal acquisition. The availability of these grazing rights is limited and information should be sought through individual Park Superintendents.

C. Permits, Rights-of-Way, and Easements for Non-Park Uses. Informational requirements are determined on a case-by-case basis, and applicants should consult with the Park Superintendent before making formal application. The applicant must provide sufficient information on the proposed non-park use, as well as park resources and resource-related values to be affected directly and indirectly by the proposed use in order to allow the Service to evaluate the application, assess the impact of the proposed use on the NPS unit and other environmental values, develop restrictions/stipulations to mitigate adverse impacts, and reach a decision on issuance of the instrument. Authorities for such permits, rights-of-way, and etc., are found in the enabling legislation for individual National Park System units and 16 U.S.C. 5 and 79 and 23 U.S.C. 317. Right-of-way and easement regulations are found at 36 CFR Part 14. Policies concerning regulation of special uses are described

in the NPS Management Policies Notebook.

D. Archaeological Permits. Permits for the excavation or removal of archaeological resources on public and Indian lands owned or administered by the Department of the Interior, and by other agencies that may delegate this responsibility to the Secretary, are issued by the Director of the NPS. These permits are required pursuant to the Archaeological Resources Protection Act of 1979 (Pub. L. 96–95) and implementing regulations (43 CPR Part 7), whenever materials of archaeological interest are to be excavated or removed. These permits are not required for archaeological work that does not result in any subsurface testing and does not result in the collection of any surface or subsurface archaeological materials. Applicants should contact the Departmental Consulting Archaeologist in Washington about these permits.

E. Federal Aid. The NPS administers financial and land grants to States, local governmental and private organizations/individuals for outdoor recreation acquisition, development and planning (Catalog of Federal Domestic Assistance (CDFA #15.916), historic preservation (CDFA #15.904), urban park and recreation recovery (CDFA #15.919) and Federal surplus real property for park recreation and historic monument use (CDFA #15.403). The following program guidelines and regulations list environmental requirements which applicants must meet:

(1) Land and Water Conservation Fund Grants Manual, Part 650.2;

(2) Historic Preservation Grants-in-Aid Manual, Chapter 4;

(3) Urban Park and Recreation Recovery Guidelines, NPS–37;

(4) Policies and Responsibilities for Conveying Federal Surplus Property Manual, Part 271. Copies of documents related to the Land and Water Conservation Fund and the Historic Preservation Fund have been provided to all State Liaison Officers for outdoor recreation and all State Historic Preservation Officers. Copies of these documents related to the Urban Park and Recreation Recovery Program are available for inspection in each NPS Regional Office as well as the NPS Office of Public Affairs in Washington, D.C. Many State agencies which seek NPS grants may prepare related EISs pursuant to section 102(2)(D) of NEPA. Such agencies should consult with the NPS Regional Office.

F. Conversion of Acquired and Developed Recreation Lands. The NPS must approve the conversion of certain acquired and developed lands prior to conversion. These include:

(1) All State and local lands and interests therein, and certain Federal lands under lease to the States, acquired or developed in whole or in part with monies from the Land and Water Conservation Fund Act are subject to section 6(f) of the Act which requires approval of conversion of use.

(2) All recreation areas and facilities (as defined in section 1004), developed or improved, in whole or in part, with a grant under the Urban Park and Recreation Recovery Act of 1978 (Pub. L. 95–625, Title 10) are subject to section 1010 of the Act which requires approval for a conversion to other than public recreation uses.

(3) Most Federal surplus real property which has been conveyed to State and local governments for use as recreation demonstration areas, historic monuments or public park and recreation areas (under the Recreation Demonstration Act of 1942 or the Federal Property and Administrative Services Act of 1949, as amended) are subject to approval of conversion of use.

(4) All abandoned railroad rights-of-way acquired by State and local governments for recreational and/or conservation uses with grants under section 809(b) of the Railroad Revitalization and Regulatory Reform Act of 1976, are subject to approval of conversion of use. Application for approval of conversion of use of these lands must be submitted to the appropriate Regional Director of the NPS. Early consultation with the Regional Office is encouraged to insure that the application is accompanied by any required environmental documentation. If the property was acquired through the Land and Water Conservation Fund, then the application must be submitted through the appropriate State Liaison Officer for Outdoor Recreation. If the property was acquired under the Federal Property and Administrative Services Act of 1949, as amended, approval of an application for conversion of use must also be concurred in by the General Services Administration.

12.4 Major Actions Normally Requiring Environmental Impact Statements

A. The following types of NPS proposals will normally require the preparation of an EIS:

(1) Wild and Scenic River proposals;

(2) National Trail proposals;

(3) Wilderness proposals;

(4) General Management Plans for major National Park System units;

(5) Grants, including multi-year grants, whose size and/or scope will result in major natural or physical changes, including interrelated social and economic changes and residential and land use changes within the project area or its immediate environs;

(6) Grants which foreclose other beneficial uses of mineral, agricultural, timber, water, energy or transportation resources important to National or State welfare.

B. If for any of these proposals it is initially decided not to prepare an EIS, and EA will be prepared and made available for public review in accordance with section 1501.4(e)(2).

12.5 Categorical exclusions

In addition to the actions listed in the Departmental categorical exclusions in Appendix 1 of 516 DM 2, many of which the Service also performs, the following NPS actions are designated categorical exclusions unless the action qualifies as an exception under Appendix 2 to 516 DM 2.

A. Actions Related to General Administration

(1) Changes or amendments to an approved action when such changes would cause no or only minimal environmental impact.

(2) Land and boundary surveys,

(3) Minor boundary changes,

(4) Reissuance/renewal of permits, rights-of-way or easements not involving new environmental impacts,

(5) Conversion of existing permits to rights-of-way, when such conversions do not continue or initiate unsatisfactory environmental conditions,

(6) Issuances, extensions, renewals, reissuances or minor modifications of concession contracts or permits not entailing new construction,

(7) Commercial use licenses involving no construction,

(8) Leasing of historic properties in accordance with 36 CFR Part 18 and NPS–38,

(9) Preparation and issuance of publications,

(10) Modifications or revisions to existing regulations, or the promulgation of new regulation for NPS-administered areas, provide the modifications, revisions or new regulation do not:

(a) Increase public use to the extent of compromising the nature and character of the area or causing physical damage to it,

(b) Introduce noncompatible uses which might compromise the nature and characteristics of the area, or cause physical damage to it,

(c) Conflict with adjacent ownerships or land uses, or

(d) Cause a nuisance to adjacent owners or occupants.

(11) At the direction of the NPS responsible official, actions where NPS has concurrence or coapproval with another bureau and the action is a categorical exclusion for that bureau.

B. Plans, Studies and Reports.

(1) Changes or amendments to an approved plan, when such changes would cause no or only minimal environmental impact.

(2) Cultural resources maintenance guides, collection management plans and historic furnishings reports.

(3) Interpretive plans (interpretive prospectuses, audio-visual plans, museum exhibit plans, wayside exhibit plans).

(4) Plans, including priorities, justifications and strategies, for non-manipulative research, monitoring, inventorying and information gathering.

(5) Statements for management, outlines of planning requirements and task directives for plans and studies.

(6) Technical assistance to other Federal, State and local agencies or the general public.

(7) Routine reports required by law or regulation.

(8) Authorization, funding or approval for the preparation of Statewide Comprehensive Outdoor Recreation Plans.

(9) Adoption or approval of surveys, studies, reports, plans and similar documents which will result in recommendations or proposed actions which would cause no or only minimal environmental impact.

(10) Preparation of internal reports, plans, studies and other documents containing recommendations for action which NPS develops preliminary to the process of preparing a specific Service proposal or set of alternatives for decision.

(11) Land protection plans which propose no significant change to existing land or visitor use.

(12) Documents which interpret existing mineral management regulations and policies, and do not recommend action.

C. Actions Related to Development.

(1) Land acquisition within established park boundaries.

(2) Land exchanges which will not lead to significant changes in the use of land.

(3) Routine maintenance and repairs to non-historic structures, facilities, utilities, grounds and trails.

(4) Routine maintenance and repairs to cultural resource sites, structures, utilities and grounds under an approved Historic Structures Preservation Guide or Cyclic Maintenance Guide; or if the action would not adversely affect the cultural resource.

(5) Installation of signs, displays, kiosks, etc.

(6) Installation of navigation aids.

(7) Establishment of mass transit systems not involving construction, experimental testing of mass transit systems, and changes in operation of existing systems (e.g. routes and schedule changes).

(8) Replacement in kind of minor structures and facilities with little or no change in location, capacity or appearance.

(9) Repair, resurfacing, striping, installation of traffic control devices, repair/replacement of guardrails, etc. on existing roads.

(10) Sanitary facilities operation.

(11) Installation of wells, comfort stations and pit toilets in areas of existing use and in developed areas.

(12) Minor trail relocation, development of compatible trail networks on logging roads or other established routes, and trail maintenance and repair.

(13) Upgrading or adding new overhead utility facilities to existing poles, or replacement poles which do not change existing pole line configurations.

(14) Issuance of right-of-way for overhead utility lines to an individual building or well from an existing line where installation will not result in significant visual intrusion and will involve no clearance of vegetation other than for placement of poles.

(15) Issuance of right-of-way for minor overhead utility lines not involving placement of poles or towers and not involving vegetation management or significant visual intrusion in an NPS-administered area.

(16) Installation of underground utilities in previously disturbed areas having stable soils, or in an existing utility right-of-way.

(17) Construction of minor structures, including small improved parking lots, in previously disturbed or developed areas.

(18) Construction or rehabilitation in previously disturbed or developed areas, required to meet health or safety regulations, or to meet requirements for making facilities accessible to the handicapped.

(19) Landscaping and landscape maintenance to previously disturbed or developed areas.

(20) Construction of fencing enclosures or boundary fencing posing no effect on wildlife migrations.

D. Actions Related to Visitor Use.

(1) Carrying capacity analysis.

(2) Minor changes in amounts or types of visitor use for the purpose of ensuring visitor safety or resource protection in accordance with existing regulations.

(3) Changes in interpretive and environmental education programs.

(4) Minor changes in programs and regulation pertaining to visitor activities.

(5) Issuance of permits for demonstrations, gathering, ceremonies, concerts, arts and crafts shows, etc. entailing only short-term or readily mitigable environmental disturbance.

(6) Designation of trail side camping zones with no or minimal improvements.

E. Actions Related to Resource Management and Protection.

(1) Archeological surveys and permits involving only surface collection or small-scale test excavations.

(2) Day-to-day resource management and research activities.

(3) Designation of environmental study areas and research natural areas.

(4) Stabilization by planting native plant species in disturbed areas.

(5) Issuance of individual hunting and/or fishing licenses in accordance with State and Federal regulations.

(6) Restoration of noncontroversial native species into suitable habitats within their historic range and elimination of exotic species.

(7) Removal of park resident individuals of non-threatened/endangered species which pose a danger to visitors, threaten park resources or become a nuisance in areas surrounding a park, when such removal is included in an approved resource management plan.

(8) Removal of non-historic materials and structures in order to restore natural conditions.

(9) Development of standards for and identification, nomination, certification and determination of eligibility of properties for listing in the National Register of Historic Places and the National Historic Landmark and National Natural Landmark Programs.

F. Actions Related to Grant Programs.

(1) Proposed actions essentially the same as those listed in paragraphs A-E above.

(2) Grants for acquisition of areas which will continue in the same or lower density use with no additional disturbance to the natural setting.

(3) Grants for replacement or renovation of facilities at their same location without altering the kind and amount of recreational, historical or cultural resources of the area; or the integrity of the existing setting.

(4) Grants for construction of facilities on lands acquired under a previous NPS or other Federal grant provided that the development is in accord with plans submitted with the acquisition grant.

(5) Grants for the construction of new facilities within an existing park or

recreation area, provided that the facilities will not:

(a) Conflict with adjacent ownerships or land use or cause a nuisance to adjacent owners or occupants; *e.g.* extend use beyond daylight hours;

(b) Introduce motorized recreation vehicles;

(c) Introduce active recreation pursuits into a passive recreation area;

(d) Increase public use or introduce noncompatible uses to the extent of compromising the nature and character of the property or causing physical damage to it; or

(e) Add or alter access to the park from the surrounding area.

(6) Grants for the restoration, rehabilitation, stabilization, preservation and reconstruction (or the authorization thereof) of properties listed on or eligible for listing on the National Register of Historic Places at their same location and provided that such actions:

(a) Will not alter the integrity of the property or its setting;

(b) Will not increase public use of the area to the extent of compromising the nature and character of the property; and

(c) Will not cause a nuisance to adjacent property owners or occupants.

Department of the Interior

Departmental Manual

Effective Date:
Series: Environmental Quality
Part 516: National Environmental Policy Act of 1969
Chapter 13: Managing the NEPA Process—Office of Surface Mining
Originating Office: Office of Environmental Policy and Compliance

516 DM 13

13.1 Purpose

This Chapter provides supplementary requirements for implementing provisions of 516 DM 1 through 6 within the Department's Office of Surface Mining. This Chapter is referenced in 516 DM 6.5.

13.2 NEPA Responsibility

A. Director. Is responsible for NEPA compliance for Office of Surface Mining (OSM).

B. Assistant Directors.

(1) Are responsible to the Director for supervision and coordination of NEPA activities in their program areas of responsibility.

(2) Are responsible, within their program areas, for OSM Headquarters review of EISs for compliance with program area policy guidance.

(3) Are responsible for assuring that environmental concerns are identified early in the planning stages and appropriate policy and program guidance is disseminated.

C. Regional Directors.

(1) Are responsible to the Director for integrating the NEPA process into all Regional activities and for NEPA compliance activities in their Regions.

(2) Will designate a staff position to be responsible to the Regional Director for the consistency, adequacy, and quality of all NEPA documents prepared by the Region's staff. The position will also be responsible to the Regional Director for providing information, guidance, training, advice, and coordination on NEPA matters, and for oversight of the Region's NEPA process.

D. Chief, Branch of Environmental Analysis (Washington). Is designated by the Director to be responsible for overall policy guidance for NEPA compliance for OSM. Information about OSM NEPA documents or the NEPA process can be obtained by contacting this Branch.

13.3 Guidance to Applicants

OSM personnel are available to meet with all applicants for permits on Federal lands or under a Federal program for a State to provide guidance on the permitting procedures. Permit applications under approved State programs are excluded from NEPA compliance. In addition, OSM's regulations implementing the Surface Mining Control and Reclamation Act of 1977 (SMCRA) provide requirements for applicants to submit environmental information. The following parts of the regulations (30 CFR) describe the information requirements.

A. Parts 770 and 771 outline the content requirements of permit applications on Federal lands or under a Federal program for a State, including: the procedures for coal exploration operations required by 30 CFR 776; the permit application contents for surface coal mining activities required by 30 CFR 778, 779, and 780; the permit application contents for underground coal mining required by 30 CFR 782, 783, and 784; the requirements for special categories of surface coal mining required by 30 CFR 785; and the procedures for review, revision, and renewal of permits and for the transfer, sale, or assignment of rights granted under permits, as required by 30 CFR 788.

B. Part 776 identifies the minimum requirements for coal exploration activities outside the permit area. Part 776 is complemented by Part 815 of Subchapter K which provides environmental protection performance standards applicable to these operations.

C. Part 778 provides the minimum requirements for legal, financial, compliance, and general nontechnical information for surface mining activities applications. Information submitted in permit applications under Part 778 will be used primarily to enable the regulatory authority and interested members of the public to ascertain the particular nature of the entity which will mine the coal and those entities which have other financial interests and public record ownership interests in both the mining entity and the property which is to be mined.

D. Part 779 establishes the minimum standards for permit applications regarding information on existing environmental resources that may be impacted by the conduct and location of the proposed surface mining activities. With the information required under Part 779, the regulatory authority is to utilize information provided in mining and reclamation plans under Part 780, in order to determine what specific impacts the proposed surface mining activities will have on the environment.

E. Part 780 establishes the heart of the permit application: the mining operations and reclamation plan for surface mining activities. The regulatory authority will utilize this information, together with the description of the existing environmental resources obtained under Part 779, to predict whether the lands to be mined can be reclaimed as required by the Act.

F. Part 782 contains permit application requirements for underground mining activities. This corresponds to Part 778 for surface mining. As such, Part 782 sets forth the minimum requirements for general, legal, financial, and compliance information required to be contained in applications for permits.

G. Part 783 describes the minimum requirements for information on existing environmental resources required in the permit application for underground mining and corresponds to Part 779 for surface mining activities.

H. Part 784 contains a discussion of the minimum requirements for reclamation and operation plans related to underground mining permit applications and corresponds to Part 780 for surface mining activities.

I. Part 785 contains requirements for permits for special categories of mining, including anthracite, special bituminous, experimental practices, mountaintop removal, steep slope, variances from approximate original contour restoration requirements, prime farmlands, alluvial valley floors,

augering operation, and in situ activities. The provisions of Part 785 are interrelated to the performance standards applicable to the special categories covered in Subchapter K and must be reviewed together with the preamble and text for Parts 818 through 828 of Subchapter K.

J. Part 788 specifies the responsibilities of persons conducting surface coal mining and reclamation operations with respect to changes, modifications, renewals, and revisions of permits after they are originally granted, and of persons who attempt to succeed to rights granted under permits by transfer, sale, or assignment of rights.

13.4 Major Actions Normally Requiring an EIS

A. The following OSM actions will normally require the preparation of an EIS:

(1) Approval of the Abandoned Mine Lands Reclamation Program, (SMCRA, Title IV). Completed in March 1980.

(2) Promulgation of the permanent regulatory program for surface coal mining and reclamation operations (SMCRA, Title V). Completed in February 1979.

(3) Approval of a proposed mining and reclamation plan that includes any of the following:

(a) Mountaintop removal operations.

(b) Mining within high use recreation areas.

(c) Mining that will cause population increases that exceed the community's ability to absorb the growth.

(d) Mining that would require a major change in existing coal transportation facilities.

(4) Approval of a proposed mining and reclamation plan for a surface mining operation that meets the following:

(a) The environmental impacts of the proposed mining operation are not adequately analyzed in an earlier environmental document covering the specific leases or mining activity: and

(b) The area to be mined is 1280 acres or more, or the annual full production level is 5 million tons or more; and

(c) Mining and reclamation operations will occur for 15 years or more.

B. If for any of these actions it is proposed not to prepare an EIS, an EA will be prepared and handled in accordance with Section 1501.4(e)(2).

13.5 Categorical Exclusions

A. The following OSM actions are deemed not to be major Federal actions within the meaning of Section 102(2)(C) of NEPA under Sections 501(a) or 702(d) of the SMCRA. They are hereby designated as categorical exclusions from the NEPA process and are exempt from the exceptions under 516 DM 2.3A(3):

(1) Promulgation of interim regulations.

(2) Approval of State programs.

(3) Promulgation of Federal programs where a State fails to submit, implement, enforce, or maintain an acceptable State program.

(4) Promulgation and implementation of the Federal lands program.

B. In addition to the actions listed in the Departmental categorical exclusions outlined in Appendix 1 of 516 DM 2, many of which OSM also performs, the following OSM actions (SMCRA sections are in parentheses) are designated categorical exclusions unless the actions qualify as an exception under 516 DM 2.3A(3):

(1) Monetary allotments to States for mining and mineral resources institutes (301).

(2) Allocation of research funds to institutes (302).

(3) Any research effort associated with ongoing abandoned mine land reclamation projects where the research is coincidental to the reclamation (401(c)(6)).

(4) Collection of reclamation fees from operators (402(a)).

(5) Findings of fact and entries on land adversely affected by past coal mining (407(a)).

(6) Acquisition of particular parcels of abandoned mine lands for reclamation (407(c)).

(7) Filing liens against property adversely affected by past coal mining (408).

(8) Interim regulatory grants (502(e)(4)).

(9) Disapproval of a proposed State program (503(c)).

(10) Review of permits issued under a previously approved State program (504(d)).

(11) Five-year permit renewal on life-of-mine plans under the Federal lands program or the Federal program for a State where the environmental impacts of continued mining are adequately analyzed in a previous environmental document for the mining operation (506(d)).

(12) Small operator assistance program (507(c)).

(13) Issuance of public notices and holding public hearings on permit applications involving Federal lands or under a Federal program for a State (513).

(14) Routine inspection and enforcement activities (517).

(15) Conflict of interest regulations (517(g)).

(16) Assessment of civil penalties (518).

(17) Releases of performance bonds or deposits for mining on Federal lands or under a Federal program for a State (519).

(18) Issuance of cessation orders for coal mining and reclamation operations (521(a)(2) and (3)).

(19) Suspension or revocation of permits(521(a)(4)).

(20) Federal oversight and enforcement of ineffective State programs (521(b)).

(21) Cooperative agreements between a state and the Secretary to provide for State regulation of surface coal mining and reclamation operations on Federal lands (523(c)).

(22) Development of a program to assure that, with respect to the granting of permits, leases, or contracts for Federally-owned coal, no one shall be unreasonably denied purchase of the mined coal (523(d)).

(23) Annual grants programs to States for program development, administration, and enforcement (705(a)).

(24) Assistance to States in the development, administration, and enforcement of State programs (705(b)).

(25) Increasing the amount of annual grants to States (705(c)).

(26) Submission of the Secretary's annual report to the Congress (706).

(27) The proposal of legislation to allow Indian tribes to regulate surface coal mining on Indian lands (710(a)).

(28) The certification and training of blasters (719).

(29) Approval of State Reclamation Plans for abandoned mine lands (405).

(30) Development of project proposals for AML grants, including field work only to the extent necessary for the preparation and design of the proposal.

(31) Use of AML funds to allow States or Tribes to set aside State share funds in a special trust for future ANFL projects.

(32) Use of AML funds in an insurance pool for the purposes of compensation for damage caused by mining prior to the date of the Act.

(33) AML reclamation projects involving: No more than 100 acres; no hazardous wastes; no explosives; no hazardous or explosive gases; no dangerous impoundments; no mine fires and refuse fires; no undisturbed, noncommercial borrow or disposal sites, no dangerous slides where abatement has the potential for damaging inhabited property; no subsidences involving the placement of material into underground mine voids through drilled holes to address more than one structure, and no unresolved issues with agencies, persons, or groups or adverse effects requiring specialized mitigation.

Departmental exceptions in 516 DM 2, appendix 2 apply to this exclusion. All sites considered in this categorical exclusion would have to first meet the eligibility test in sections 404, 409 and 411 of SMCRA. Also projects that have been declared an emergency pursuant to section 410 of SMCRA, may be candidates for this exclusion.

Department of the Interior

Departmental Manual

Effective Date:
Series: Environmental Quality
Part 516: National Environmental Policy Act of 1969
Chapter 14: Managing the NEPA Process—Bureau of Reclamation
Originating Office: Office of Environmental Policy and Compliance

516 DM 14

14.1

Purpose This Chapter provides supplementary requirements for implementing provisions of 516 DM 1 through 6 within the Department's Bureau of Reclamation. This Chapter is referenced in 516 DM 6.5.

14.2 NEPA Responsibility

A. Commissioner. Is responsible for NEPA compliance for Bureau of Reclamation (BuRec) activities.

B. Assistant Commissioners.

(1) Are responsible to the Commissioner for supervising and coordinating NEPA activities in their assigned areas of responsibility.

(2) Are responsible, in assigned areas of responsibility, for the Washington level review of EISs prepared in the regions or E&R Center for compliance with program area policy guidance.

(3) Provide supervision and coordination in assigned areas of responsibility to insure that environmental concerns are identified in the planning stages and to see that Regional Directors follow through with environmental commitments during the construction and operation and maintenance stages.

(4) May designate a staff position to be responsible for NEPA oversight and coordination in their assigned areas of responsibility.

C. Regional Directors.

(1) Are fully responsible to the Commissioner for integrating the NEPA compliance activities in their regional area.

(2) Will designate a staff position with the full responsibility to the Regional Director for providing direction of the NEPA process including information, guidance, training, advice, consistency, quality, adequacy, oversight, and coordination on NEPA documents or matters.

D. Division and Office Chiefs in E&R Center.

(1) Are responsible for integrating the NEPA process into their activities.

(2) Will designate a staff position to be responsible to the division or office chief for providing guidance, advice, consistency, quality, adequacy, oversight, and coordination on NEPA documents for matters originating in the E&R Center.

(3) Will provide a technical review within their area of expertise of environmental documents directed to their office for review and comment.

E. Director, Office of Environmental Affairs (Washington). Is the position designated by the Commissioner to be responsible for overall policy review of BuRec NEPA compliance. Information about BuRec NEPA documents of the NEPA process can be obtained by contacting this office.

14.3 Guidance to Applicants

A. Types of Applicants.

(1) Actions that are initiated by private or non-Federal entities through applications include the following: Repayment contracts, water service contracts, Small Reclamation Projects Act Loans, Emergency Loans, Rehabilitation and Betterment Loans, Distribution System Loans, land use permits, licenses, easements, crossing agreements, permits for removal of sand and gravel, renewal of grazing, recreation management, or cabin site leases.

(2) Applicants will be provided information by the regional office on what environmental reports, analysis, or information are needed when they initiate their application. The environmental information requested may, of necessity, be related to impacts on private lands or other lands not under the jurisdiction of the Bureau to allow the BuRec to meet its environmental responsibilities.

B. Prepared Program Guidance for Applicants.

(1) Loans under the Small Reclamation Projects Act of 1958, U.S. Department of the Interior, Bureau of Reclamation, March 1976 (35 pages).

(2) Guidelines for Preparing Applications for Loans and Grants under the Small Reclamation Projects Act, Public Law 84–984, U.S. Department of the Interior, Bureau of Reclamation, December 1973 (121 pages).

(3) The Rehabilitation and Betterment Program, U.S. Department of the Interior, Bureau of Reclamation, September 1978 (14 pages).

(4) Guidelines for Preparation of Reports to Support Proposed Rehabilitation and Betterment Programs, U.S. Department of the Interior, Bureau of Reclamation, September 1978 (8 pages).

14.4 Major Actions Normally Requiring an EIS

A. The following types of BuRec proposals will normally require the preparation of an EIS:

(1) Proposed Feasibility Reports on water resources projects.

(2) Proposed Definite Plan Reports (DPR) on water resources projects if not covered by an EIS at the feasibility report stage or if there have been major changes in the project plan which may cause significantly different or additional new impacts.

(3) Proposed repayment contracts and water service contracts or amendments thereof or supplements thereto, for irrigation, municipal, domestic, or industrial water where NEPA compliance has not already been accomplished.

(4) Proposed modifications to existing projects or proposed changes in the programmed operation of an existing project that may cause a significant new impact.

(5) Proposed initiation of construction of a project or major unit thereof, if not already covered by an EIS, or if significant new impacts are anticipated.

(6) Proposed major research projects where there may be significant impacts resulting from experimentation or other such research activities.

B. If, for any of these proposals it is initially decided not to prepare an EIS, an EA will be prepared and handled in accordance with Section 1501.4(e)(2).

14.5 Categorical Exclusions

In addition to the actions listed in the Departmental categorical exclusions outlined in Appendix 1 of 516 DM 2, many of which the Bureau also performs, the following Bureau actions are designated categorical exclusions unless the action qualifies as an exception under 516 DM 2.3A(3):

A. General Activities.

(1) Changes in regulations or policy directives and legislative proposals where the impacts are limited to economic and/or social effects.

(2) Training activities of enrollees assigned to the various youth programs. Such training may include minor construction activities for other entities.

(3) Research activities, such as nondestructive data collection and analysis, monitoring, modeling,

laboratory testing, calibration, and testing of instruments or procedures and nonmanipulative field studies.

B. Planning Activities.

(1) Routine planning investigation activities where the impacts are expected to be localized, such as land classification surveys, topographic surveys, archeological surveys, wildlife studies, economic studies, social studies, and other study activity during any planning, preconstruction, construction, or operation and maintenance phases.

(2) Special, status, concluding, or other planning reports that do not contain recommendations for action, but may or may not recommend further study.

(3) Data collection studies that involve test excavations for cultural resources investigations for cultural resources investigations or test pitting, drilling, or seismic investigations for geologic purposes where the impacts will be localized.

C. Project Implementation Activities.

(1) Classification and certification of irrigable lands.

(2) Minor acquisition of land and rights-of-way or easements.

(3) Minor construction activities associated with authorized projects which correct unsatisfactory environmental conditions or which merely augment or supplement, or are enclosed within existing facilities.

(4) Approval of land management plans where implementation will only result in minor construction activities and resultant increased operation and maintenance activities.

D. Operation and Maintenance Activities.

(1) Maintenance, rehabilitation, and replacement of existing facilities which may involve a minor change in size, location, and/or operation.

(2) Transfer of the operation and maintenance of Federal facilities to water districts, recreation agencies, fish and wildlife agencies, or other entities where the anticipated operation and maintenance activities are agreed to in a contract or a memorandum of agreement, follow approved Reclamation policy, and no major change in operation and maintenance is anticipated.

(3) Administration and implementation of project repayment and water service contracts, including approval of organizational or other administrative changes in contracting entities brought about by inclusion or exclusion of lands in these contracts.

(4) Approval, execution, and implementation of water service contracts for minor amounts of long-term water use or temporary or interim water use where the action does not lead to long-term changes and where the impacts are expected to be localized.

(5) Approval of changes in pumping power and water rates charged contractors by the Bureau for project water service or power.

(6) Execution and administration of recordable contracts for disposal of excess lands.

(7) Withdrawal, termination, modification, or revocation where the land would be opened to discretionary land laws and where such future discretionary actions would be subject to the NEPA process, and disposal and sale of acquired lands where no major change in usage is anticipated.

(8) Renewal of existing grazing, recreation, management, or cabin site leases which do not increase the level of use or continue unsatisfactory environmental conditions.

(9) Issuance of permits for removal of gravel or sand by an established process from existing quarries.

(10) Issuance of permits, licenses, easements, and crossing agreements which provide right-of-way over Bureau lands where the action does not allow for or lead to a major public or private action.

(11) Implementation of improved appearance and soil and moisture conservation programs where the impacts are localized.

(12) Conduct of programs of demonstration, educational, and technical assistance to water user organizations for improvement of project and on-farm irrigation water use and management.

(13) Follow-on actions such as access agreements, contractual arrangements, and operational procedures for hydropower facilities which are on or appurtenant to Bureau facilities or lands which are permitted or licensed by the Federal Energy Regulatory Commission (FERC), when FERC has accomplished compliance with NEPA (including actions to be taken by the Bureau) and when the Bureau's environmental concerns have been accommodated in accordance with the Bureau/FERC Memorandum of Understanding of June 22, 1981.

(14) Approval, renewal, transfer, and execution of an original, amendatory, or supplemental water service or repayment contract where the only result will be to implement an administrative or financial practice or change.

(15) Approval of second party water sales agreements for small amounts of water (usually less than 10 acre-feet) where the Bureau has an existing water sales contract in effect.

(16) Approval and execution of contracts requiring the repayment of funds furnished or expended on behalf of an entity pursuant to the Emergency Fund Act of June 26, 1948 (43 U.S.C. 502), where the action taken is limited to the original location of the damaged facility.

(17) Minor safety of dams construction activities where the work is confined to the dam, abutment areas, or appurtenant features, and where no major change in reservoir or downstream operation is anticipated as a result of the construction activities.

E. Grant and Loan Activities.

(1) Rehabilitation and Betterment Act loans and contracts which involve repair, replacement, or modification of equipment in existing structures or minor repairs to existing dams, canals, laterals, drains, pipelines, and similar facilities.

(2) Small Reclamation Projects Act grants and loans where the work to be done is confined to areas already impacted by farming or development activities, work is considered minor, and where the impacts are expected to be localized.

(3) Distribution System Loans Act loans where the work to be done is confined to areas already impacted by farming or developing activities, work is considered minor, and where the impacts are expected to be localized.

Department of the Interior

Departmental Manual

Effective Date:
Series: Environmental Quality
Part 516: National Environmental Policy Act of 1969
Chapter 15: Managing the NEPA Process—Minerals Management Service
Originating Office: Office of Environmental Policy and Compliance

516 DM 15

15.1 Purpose

This Chapter provides supplementary requirements for implementing provisions of 516 DM 1 through 6 within the Department's Minerals Management Service. This Chapter is referenced in 516 DM 6.5.

15.2 NEPA Responsibility

A. The Director/Deputy Director are responsible for NEPA compliance for Minerals Management Service (MMS) activities.

B. The Associate Director for Offshore Minerals Management is responsible for

ensuring NEPA compliance for all offshore MMS activities.

C. The Chief, Offshore Environmental Assessment Division (OEAD), is responsible for NEPA-related policy and guidance for MMS activities, including monitoring MMS activities to ensure NEPA compliance, assuring the quality control of MMS environmental documents, and managing the review of non-MMS environmental documents. The office is the focal point for all NEPA matters and information about MMS environmental documents or the NEPA process can be obtained by contacting it or the appropriate Region.

D. The Regional Directors are responsible to the Associate Director for Offshore Minerals Management for overall direction and integration of the NEPA process into their activities and for NEPA compliance in their Regions.

15.3 Guidance to Applicants

A. General.

(1) Applicants should make initial contact with the Regional Director of the office where the affected action is located.

(2) Potential applicants may secure from Regional Directors a list or program regulations or other directives/guidance providing advice or requirements for submission of environmental information. The purpose of making these regulations known to potential applicants in advance is to assist them in presenting a detailed, adequate, and accurate description of the proposal and alternatives when they file their application and to minimize the need to request additional information. This is a minimum list, and additional requirements may be identified after detailed review of the formal submission and during scoping.

B. Regulations. The following partial list identifies MMS Outer Continental Shelf (OCS) regulations and other guidance which may apply to a particular application.

(1) Grants of pipeline rights-of-way and related facilities on the OCS (30 CFR Part 256, Subpart N).

(2) Exploration, development and production activities, Environmental Report (30 CFR Part 250, Sec. 250.34–3).

(3) Air quality (30 CFR Part 250, Sec. 250,57).

(4) Geological and geophysical explorations of the OCS (30 CFR Part 251. Sec. 251.6–2(b)).

(5) OCS Pipelines Rights-of-Ways. A Procedure Handbook.

(6) Guidelines for Preparing OCS Environmental Reports.

15.4 Major Actions Normally Requiring an EIS

A. The following proposals will normally require the preparation of an EIS:

(1) Approval of a 5-year offshore oil and gas leasing program.

(2) Approval of offshore lease sales.

(3) Approval of an offshore oil and gas development and production plan in any area or region of the offshore, other than the central or western Gulf of Mexico, when the plan is declared to be a major Federal action in accordance with section 25(e)(1) of the OCS Lands Act Amendments of 1978.

B. If, for any of these actions, it is proposed not to prepare an EIS, an environmental assessment will be prepared and handled in accordance with Section 1501.4(e)(2).

15.4 Categorical Exclusions

In addition to the actions listed in the Departmental categorical exclusions outlined in Appendix I of 516 DM 2, many of which the MMS also performs, the following MMS actions are designated categorical exclusions unless the action qualifies as an exception under Appendix 2 of 516 DM 2:

A. General.

(1) Inventory, data, and information collection, including the conduct of environmental monitoring and nondestructive research programs.

(2) Actions for which MMS has concurrence or co-approval with another Bureau if the action is a categorical exclusion for that Bureau.

B. Internal Program Initiatives.

(1) All resource evaluation activities including surveying, mapping, and geophysical surveying which do not use solid or liquid explosives.

(2) Collection of geologic data and samples including geologic, paleontologic, mineralogic, geochemical, and geophysical investigations which does not involve drilling beyond 50 feet of consolidated rock or beyond 300 feet of unconsolidated rock, including contracts therefor.

(3) Acquisition of existing geological or geophysical data from otherwise private exploration ventures.

(4) Well logging, digital modeling. inventory of existing wells, and installation of recording devices in wells.

(5) Establishment and installation of any research/monitoring devices.

(6) Test or exploration drilling and downhole testing included in a project previously subject to the NEPA process.

(7) Insignificant revisions to the approved 5-year leasing program.

(8) Prelease planning steps such as the Call for Information and Area Identification.

C. Permit and Regulatory Functions.

(1) Issuance and modification of regulations, Orders, Standards, Notices to Lessees and Operators. Guidelines and field rules for which the impacts are limited to administrative, economic, or technological effects and the environmental impacts are minimal.

(2) Approval of production measurement methods, facilities, and procedures.

(3) Approval of off-lease storage in existing facilities.

(4) Approval of unitization Agreements, pooling, or communitization agreements.

(5) Approval of commingling of production.

(6) Approval of suspensions of operations and suspensions of production.

(7) Approval of lease consolidation applications, lease assignments or transfers, operating rights, operating agreements, lease extensions, lease relinquishments, and bond terminations.

(8) Administration decisions and actions and record keeping such as:

(a) Approval of applications for pricing determinations under the Natural Gas Policy Act.

(b) Approval of underground gas storage agreements from a presently or formerly productive reservoir.

(c) Issuance of paying well determinations and participating area approvals.

(d) Issuance of drainage determinations.

(9) Approval of offshore geological and geophysical mineral exploration activities, except when the proposed activity includes the drilling of deep stratigraphic test holes or uses solid or liquid explosives.

(10) Approval of an offshore lease or unit exploration. development/production plan or a Development Operation Coordination Document in the central or western Gulf of Mexico (30 CFR ZSO.2) except those proposing facilities: (1) In areas of high seismic risk or seismicity, relatively untested deep water, or remote areas, or (2)within the boundary of a proposed or established marine sanctuary, and/or within or near the boundary of a proposed or established wildlife refuge or areas of high biological sensitivity; or (3) in areas of hazardous natural bottom conditions; or (4) utilizing new or unusual technology.

(11) Approval of minor revisions of or minor variances from activities described in an approved offshore

exploration or development/production plan, including pipeline applications.

(12) Approval of an Application for Permit to Drill (APD) an offshore oil and gas exploration or development well, when said well and appropriate mitigation measures are described in an approved exploration plan, development plan, production plan, or Development Operations Coordination Document.

(13) Preliminary activities conducted on-a lease prior to approval of an exploration or development/production plan or a Development Operations Coordination Plan. These are activities such as geological, geophysical, and other surveys necessary to develop a comprehensive exploration plan, development/production plan, or Development Operations Coordination Plan.

(14) Approval of Sundry Notices and Reports on Wells.

(15) Rights-of-ways, easements, temporary use permits, and any revisions thereto that do not result in a new pipeline corridor to shore.

D. Royalty Functions. All functions of the Associate Director for Royalty Management including, but not limited to, such activities as: approval of royalty payment procedures, including royalty oil contracts; and determinations concerning royalty quantities and values, such as audits, royalty reductions, collection procedures, reporting procedures, and any actions taken with regard to royalty collections (including similar actions relating to net profit and windfall profit taxes).

[FR Doc. 00–21245 Filed 8–25–00; 8:45 am]

BILLING CODE 4310–RG–P

Federal Register

Monday,
August 28, 2000

Part IV

Department of Defense
General Services Administration
National Aeronautics and Space Administration

48 CFR Parts 2, 32, and 52

Federal Acquisition Regulation; Prompt Payment and the Recovery of Overpayment; Proposed Rule

DEPARTMENT OF DEFENSE

GENERAL SERVICES ADMINISTRATION

NATIONAL AERONAUTICS AND SPACE ADMINISTRATION

48 CFR Parts 2, 32, and 52

[FAR Case 1999–023]

RIN 9000–AI89

Federal Acquisition Regulation; Prompt Payment and the Recovery of Overpayment

AGENCIES: Department of Defense (DoD), General Services Administration (GSA), and National Aeronautics and Space Administration (NASA).

ACTION: Proposed rule.

SUMMARY: The Civilian Agency Acquisition Council and the Defense Acquisition Regulations Council (Councils) are proposing to amend the Federal Acquisition Regulation (FAR) to:

- Reflect changes made to the Office of Management and Budget (OMB) prompt payment regulations;
- Simplify and clarify the prompt payment coverage currently in the FAR;
- Require the contractor to notify the contracting officer if the contractor becomes aware of an overpayment; and
- Write all new and revised text using plain language in accordance with the White House memorandum, Plain Language in Government Writing, dated June 1, 1998.

DATES: Interested parties should submit comments in writing on or before October 27, 2000 to be considered in the formulation of a final rule.

ADDRESSES: Submit written comments to: General Services Administration, FAR Secretariat (MVRS), 1800 F Street, NW, Room 4035, ATTN: Laurie Duarte, Washington, DC 20405.

Submit electronic comments via the Internet to: farcase.1999–023@gsa.gov

Please submit comments only and cite FAR case 1999–023 in all correspondence related to this case.

FOR FURTHER INFORMATION CONTACT: The FAR Secretariat, Room 4035, GS Building, Washington, DC, 20405, at (202) 501–4755 for information pertaining to status or publication schedules. For clarification of content, contact Jeremy Olson at (202) 501–0692. Please cite FAR case 1999–023.

SUPPLEMENTARY INFORMATION:

A. Background

This proposed rule revises the FAR to—

- *Conform the prompt payment coverage to OMB regulations.* The OMB final rule was published in the **Federal Register** at 64 FR 52580, September 29, 1999. The FAR rule—

1. Replaces references to OMB Circular A–125, Prompt Payment, with references to 5 CFR part 1315. The OMB rule incorporated Prompt Payment Act (31 U.S.C. 39) requirements into a new part 1315 of Title 5 of the Code of Federal Regulations. OMB's issuance of codified regulations has the effect of superceding and rescinding Circular A–125;
2. Conforms certain FAR definitions related to prompt payment to those in the new OMB regulations;
3. Revises the requirements for a ''proper invoice''; and
4. Changes policies on interim payments under cost reimbursement contracts so that prompt payment late payment penalty interest requirements apply to interim payments made for separately priced contract line items that have been completed by a contractor and accepted by the Government.

- *Simplify and clarify existing language.* The rule—

1. Clarifies that prompt payment interest penalties do not apply to contract financing payments by—

a. Moving contract financing payment coverage from FAR 32.9 to FAR 32.007;

b. Removing contract financing payments coverage from the prompt payment clauses at FAR 52.232–25, Prompt Payment; FAR 52.232–26, Prompt Payment for Fixed-Price Architect-Engineer Contracts; and FAR 52.232–27, Prompt Payment for Construction Contracts; and

c. Adding language regarding payment due dates and the inapplicability of prompt payment interest penalties to contract financing clauses; and

2. Removes discussion of the interest penalty calculation at FAR 32.907–1 and in the prompt payment clauses, and replaces the discussion with a reference to the OMB prompt payment regulations at 5 CFR part 1315.

- *Implement a General Accounting Office (GAO) recommendation.* In July 1999, the GAO published a report (GAO/NSIAD–99–131) entitled Greater Attention Needed to Identify and Recover Overpayments. After examining the process for identifying and collecting overpayments, GAO concluded in their report that ''Under current law, there is no requirement for contractors who have been overpaid to notify the Government of overpayments or to return overpayments prior to the Government issuing a demand letter'' (*i.e.*, formal notification to the contractor to pay money owed to the Government). One of the recommendations of the report was that DoD require contractors to promptly notify the Government of overpayments made to them. Accordingly, the FAR rule adds a paragraph to the prompt payment clauses that requires the contractor to notify the contracting officer if the contractor becomes aware of an overpayment; and
- Write all new and revised text using plain language in accordance with the White House memorandum, Plain Language in Government Writing, dated June 1, 1998.

This is not a significant regulatory action and, therefore, was not subject to review under Section 6(b) of Executive Order 12866, Regulatory Planning and Review, dated September 30, 1993. This rule is not a major rule under 5 U.S.C. 804.

B. Regulatory Flexibility Act

The Councils do not expect this proposed rule to have a significant economic impact on a substantial number of small entities within the meaning of the Regulatory Flexibility Act, 5 U.S.C. 601, *et seq.*, because, of the three primary changes that are included in this rule, one is a clarification and not a change in policy and the other two will not affect a substantial number of small entities. The current FAR authorizes agencies to collect TIN and EFT banking information in any manner they choose, such as requiring it to be provided on each invoice. The clarification of this authority at FAR 32.905 is not new policy. The proposed amendments addressing late payment penalties for certain interim payments under cost reimbursement contracts do not affect a substantial number of small entities because most contracts awarded to small businesses are awarded on a competitive, fixed-price basis and the number of small entities receiving cost reimbursement awards is not substantial. The proposed rule amendments addressing notification of overpayments is not expected to impact a substantial number of small entities because the overpayments cited by GAO in their report 99–131, July 1999, were all related to large businesses. An Initial Regulatory Flexibility Analysis has, therefore, not been performed. We invite comments from small businesses and other interested parties. The Councils will consider comments from small entities concerning the affected FAR Parts in accordance with 5 U.S.C. 610. Interested parties must submit such comments separately and should cite 5

U.S.C. 601, *et seq.* (FAR case 1999–023), in correspondence.

C. Paperwork Reduction Act

The Paperwork Reduction Act (Pub. L. 104–13) applies because the proposed rule contains information collection requirements. The proposed rule increases the collection requirements under the previously approved OMB Control No. 9000–0070, because the rule requires contractors to notify the Government of overpayments.

Annual Reporting Burden

Public reporting burden for this collection of information is estimated to average 5 minutes per response, including the time for reviewing instructions, searching existing data sources, gathering and maintaining the data needed, and completing and reviewing the collection of information. Based on findings by the GAO in its draft report of October 17, 1997, checks received from contractors averaged roughly 7,000 per year. About 27 percent of the dollar value of these checks was attributable to payment errors (*i.e.*, not because of contract changes, modifications, etc.). Therefore, there were about 1,890 checks received due to payment errors. At 5 minutes per notification, this results in an annual average of approximately 157.5 hours per year, governmentwide. Although this estimated burden requires approval under the Act, it is so small that it does not impact the estimated total burden under 9000–0070.

The annual reporting burden under 9000–0070 is estimated as follows:

Respondents: 80,000.

Responses per respondent: 120.

Total annual responses: 9,600,000.

Preparation hours per response: .025 hrs.

Total response burden hours: 240,000 hrs.

D. Request for Comments Regarding Paperwork Burden

Submit comments, including suggestions for reducing this burden, not later than October 27, 2000 to: FAR Desk Officer, OMB, Room 10102, NEOB, Washington, DC 20503, and a copy to the General Services Administration, FAR Secretariat (MVR), 1800 F Street, NW, Room 4035, Washington, DC 20405.

Public comments are particularly invited on: Whether this collection of information is necessary for the proper performance of functions of the FAR, and whether it will have practical utility; whether our estimate of the public burden of this collection of information is accurate, and based on valid assumptions and methodology; ways to enhance the quality, utility, and clarity of the information to be collected; and ways in which we can minimize the burden of the collection of information on those who are to respond, through the use of appropriate technological collection techniques or other forms of information technology.

Requester may obtain a copy of the justification from the General Services Administration, FAR Secretariat (MVR), Room 4035, Washington, DC 20405, telephone (202) 208–7312. Please cite OMB Control Number 9000–0070, FAR Case 1999–023, Prompt Payment and Recovery of Overpayment, in all correspondence.

List of Subjects in 48 CFR Parts 2, 32, and 52

Government procurement.

Dated: August 22, 2000.

Jeremy F. Olson,

Acting Director, Federal Acquisition Policy Division.

Therefore, DoD, GSA, and NASA propose that 48 CFR parts 2, 32, and 52 be amended as set forth below:

1. The authority citation for 48 CFR parts 2, 32, and 52 continues to read as follows:

Authority: 40 U.S.C. 486(c); 10 U.S.C. chapter 137; and 42 U.S.C. 2473(c).

PART 2—DEFINITIONS OF WORDS AND TERMS

2. Amend section 2.101 by adding, in alphabetical order, the definitions ''Proper invoice'' and ''Receiving report'' to read as follows:

2.101 Definitions.

* * * * *

Proper invoice means an invoice that meets the minimum standards specified in 32.905(b).

Receiving report means written evidence that indicates Government acceptance of supplies delivered or services performed (see subpart 46.6). Receiving reports must meet the requirements of 32.905(c).

* * * * *

PART 32—CONTRACT FINANCING

3. Amend section 32.001 by adding an introductory sentence; in the definition ''Contract action'' by removing '', as used in this part,''; and by adding, in alphabetical order, the definitions ''Contract financing payment'', ''Designated billing office'', ''Designated payment office'', ''Due date'', and ''Invoice payment'' to read as follows:

32.001 Definitions.

As used in this part—

* * * * *

Contract financing payment means an authorized Government disbursement of monies to a contractor prior to acceptance of supplies or services by the Government.

(1) Contract financing payments include—

(i) Advance payments;

(ii) Performance-based payments;

(iii) Commercial advance and interim payments;

(iv) Progress payments based on cost under the clause at 52.232–16, Progress Payments;

(v) Progress payments based on a percentage or stage of completion (see 32.102(e)), except those made under the clause at 52.232–5, Payments Under Fixed-Price Construction Contracts, or the clause at 52.232–10, Payments Under Fixed-Price Architect-Engineer Contracts; and

(vi) Interim payments on cost-type contracts, except for interim payments of separately priced contract line items that—

(A) The contractor has completed; and

(B) The Government has accepted.

(2) Contract financing payments do not include—

(i) Invoice payments;

(ii) Payments for partial deliveries; or

(iii) Lease and rental payments.

* * * * *

Designated billing office means the office or person (governmental or nongovernmental) designated in the contract where the contractor first submits invoices and contract financing requests. The contract might designate different offices to receive invoices and contract financing requests.

The designated billing office might be—

(1) The Government disbursing office;

(2) The contract administration office;

(3) The office accepting the supplies delivered or services performed by the contractor;

(4) The contract audit office; or

(5) A nongovernmental agent.

Designated payment office means the office designated in the contract to make invoice payments or contract financing payments. Normally, this will be the Government disbursing office.

Due date means the date on which payment should be made.

Invoice payment means a Government disbursement of monies to a contractor under a contract or other authorization for supplies or services accepted by the Government.

(1) Invoice payments include—

(i) Payments for partial deliveries that have been accepted by the Government;

(ii) Final cost or fee payments where amounts owed have been settled between the Government and the contractor;

(iii) For purposes of subpart 32.9 only, all payments made under the clause at 52.232–5, Payments Under Fixed-Price Construction Contracts, and the clause at 52.232–10, Payments Under Fixed-Price Architect-Engineer Contracts; and

(iv) Interim payments under cost-type contracts for separately priced contract line items that—

(A) The contractor has completed; and

(B) The Government has accepted.

(2) Invoice payments do not include contract financing payments.

* * * * *

4. Add section 32.007 to read as follows:

32.007 Contract financing payments.

(a)(1) Unless otherwise prescribed in agency policies and procedures or otherwise specified in paragraph (b) of this section, the due date for making contract financing payments by the designated payment office is the 30th day after the designated billing office receives a proper contract financing request.

(2) If an audit or other review of a specific financing request is required to ensure compliance with the terms and conditions of the contract, the designated payment office is not compelled to make payment by the specified due date.

(3) Agency heads may prescribe shorter periods for payment based on contract pricing or administrative considerations. For example, a shorter period may be justified by an agency if the nature and extent of contract financing arrangements are integrated with agency contract pricing policies.

(4) Agency heads must not prescribe a period shorter than 7 days or longer than 30 days.

(b) For advance payments, loans, or other arrangements that do not involve recurrent submission of contract financing requests, the designated payment office will make payment in accordance with the applicable contract financing terms or as directed by the contracting officer.

(c) A proper contract financing request must comply with the terms and conditions specified by the contract. The contractor must correct any defects in requests submitted in the manner specified in the contract or as directed by the contracting officer.

(d) The designated billing office and designated payment office must annotate each contract financing request with the date their respective offices received the request.

(e) The Government will not pay an interest penalty to the contractor as a result of delayed contract financing payments.

5. Amend section 32.102 by revising paragraph (d) to read as follows:

32.102 Description of contract financing methods.

* * * * *

(d) Payments for accepted supplies and services that are only a part of the contract requirements (*i.e.,* partial deliveries) are authorized under 41 U.S.C. 255 and 10 U.S.C. 2307. In accordance with 5 CFR 1315.4(k), agencies must pay for partial delivery of supplies or partial performance of services unless specifically prohibited by the contract. Although payments for partial deliveries generally are treated as a method of payment and not as a method of contract financing, using partial delivery payments can assist contractors to participate in contracts without, or with minimal, contract financing. When appropriate, contract statements of work and pricing arrangements must permit acceptance and payment for discrete portions of the work, as soon as accepted (see 32.906(c)).

* * * * *

Subpart 32.9 [Amended]

6. Amend Subpart 32.9 by—

a. Revising sections 32.900, 32.901, and 32.902;

b. Removing section 32.903;

c. Redesignating sections 32.904, 32.905, and 32.906 as sections 32.903, 32.904, and 32.905, respectively, and revising;

d. Adding section 32.906; and

e. Revising sections 32.907, 32.907–1, 32.907–2, 32.908, and 32.909 to read as follows:

Subpart 32.9 Prompt Payment

Sec.
32.900 Scope of subpart.
32.901 Applicability.
32.902 Definitions.
32.903 Responsibilities.
32.904 Determining payment due dates.
32.905 Payment documentation and process.
32.906 Making payments.
32.907 Interest penalties.
32.908 Contract clauses.
32.909 Contractor inquiries.

Subpart 32.9—Prompt Payment

32.900 Scope of subpart.

This subpart prescribes policies, procedures, and clauses for implementing Office of Management and Budget (OMB) prompt payment regulations at 5 CFR part 1315.

32.901 Applicability.

(a) This subpart applies to invoice payments on all contracts, except contracts with payment terms and late payment penalties established by other governmental authority (*e.g.,* tariffs).

(b) This subpart does not apply to contract financing payments (see definition at 32.001).

32.902 Definitions.

As used in this subpart—

Discount for prompt payment means an invoice payment reduction offered by the contractor for payment prior to the due date.

Mixed invoice means an invoice that contains items with different payment due dates.

Payment date means the date on which a check for payment is dated or, for an electronic funds transfer (EFT), the settlement date.

Settlement date, as it applies to EFT, means the date on which an EFT payment is credited to the contractor's financial institution.

32.903 Responsibilities.

(a) Agency heads—

(1) Must establish the policies and procedures necessary to implement this subpart;

(2) May prescribe additional standards for establishing invoice payment due dates (see 32.904) necessary to support agency programs and foster prompt payment to contractors;

(3) May adopt different payment procedures in order to accommodate unique circumstances, provided that such procedures are consistent with the policies in this subpart;

(4) Must inform contractors of points of contact within their cognizant payment offices to enable contractors to obtain status of invoices; and

(5) May authorize the use of the accelerated payment methods specified at 5 CFR 1315.5.

(b) When drafting solicitations and contracts, contracting officers must identify for each contract line item number, subline item number, or exhibit line item number—

(1) The applicable Prompt Payment clauses that apply to each item when the solicitation or contract contains items that will be subject to different payment terms; and

(2) The applicable Prompt Payment food category (*e.g.,* which item numbers are meat or meat food products, which are perishable agricultural commodities), when the solicitation or contract contains multiple payment terms for various classes of foods and edible products.

32.904 Determining payment due dates.

(a) *General.* Agency procedures must ensure that, when specifying due dates, contracting officers give full consideration to the time reasonably required by Government officials to fulfill their administrative responsibilities under the contract.

(b) *Payment due dates.* Except as prescribed in paragraphs (c), (d), and (e) of this section, or as authorized in 32.908 (a)(2) or (c)(2), the due date for making an invoice payment is as follows:

(1) The later of the following two events:

(i) The 30th day after the designated billing office receives a proper invoice from the contractor (except as provided in paragraph ((b)(3) of this section).

(ii) The 30th day after Government acceptance of supplies delivered or services performed.

(A) For a final invoice, when the payment amount is subject to contract settlement actions, acceptance is deemed to occur on the effective date of the contract settlement.

(B) For the sole purpose of computing an interest penalty that might be due the contractor—

(*1*) Government acceptance is deemed to occur constructively on the 7th day after the contractor delivers supplies or performs services in accordance with the terms and conditions of the contract, unless there is a disagreement over quantity, quality, or contractor compliance with a contract requirement;

(*2*) If actual acceptance occurs within the constructive acceptance period, the Government must base the determination of an interest penalty on the actual date of acceptance;

(*3*) The constructive acceptance requirement does not compel Government officials to accept supplies or services, perform contract administration functions, or make payment prior to fulfilling their responsibilities; and

(*4*) Except for a contract for the purchase of a commercial item, including a brand-name commercial item for authorized resale (*e.g.,* commissary items), the contracting officer may specify a longer period for constructive acceptance in the solicitation and resulting contract, if required to afford the Government a reasonable opportunity to inspect and test the supplies furnished or to evaluate the services performed. The contracting officer must document in the contract file the justification for extending the constructive acceptance period beyond 7 days. Extended acceptance periods must not be a routine agency practice and must be used only when necessary to permit proper Government inspection and testing of the supplies delivered or services performed.

(2) If the contract does not require submission of an invoice for payment (*e.g.*, periodic lease payments), the contracting officer must specify the due date in the contract.

(3) If the designated billing office fails to annotate the invoice with the actual date of receipt at the time of receipt, the invoice payment due date is the 30th day after the date of the contractor's invoice, provided the designated billing office receives a proper invoice and there is no disagreement over quantity, quality, or contractor compliance with contract requirements.

(c) *Architect-engineer contracts.* (1) The due date for making payments on contracts that contain the clause at 52.232–10, Payments Under Fixed-Price Architect-Engineer Contracts, is as follows:

(i) The due date for work or services completed by the contractor is the later of the following two events:

(A) The 30th day after the designated billing office receives a proper invoice from the contractor.

(B) The 30th day after Government acceptance of the work or services completed by the contractor.

(*1*) For a final invoice, when the payment amount is subject to contract settlement actions (*e.g.,* release of claims), acceptance is deemed to occur on the effective date of the settlement.

(*2*) For the sole purpose of computing an interest penalty that might be due the contractor, Government acceptance is deemed to occur constructively on the 7th day after the contractor completes the work or services in accordance with the terms and conditions of the contract (see also paragraph (c)(2) of this section). If actual acceptance occurs within the constructive acceptance period, the Government must base the determination of an interest penalty on the actual date of acceptance.

(ii) The due date for progress payments is the 30th day after Government approval of contractor estimates of work or services accomplished. For the sole purpose of computing an interest penalty that might be due the contractor—

(A) Government approval is deemed to occur constructively on the 7th day after the designated billing office receives the contractor estimates (see also paragraph (c)(2) of this section).

(B) If actual approval occurs within the constructive approval period, the Government must base the determination of an interest penalty on the actual date of approval.

(iii) If the designated billing office fails to annotate the invoice or payment request with the actual date of receipt at the time of receipt, the payment due date is the 30th day after the date of the contractor's invoice or payment request, provided the designated billing office receives a proper invoice or payment request and there is no disagreement over quantity, quality, or contractor compliance with contract requirements.

(2) The constructive acceptance and constructive approval requirements described in paragraphs (c)(1)(i) and (ii) of this section are conditioned upon receipt of a proper payment request and no disagreement over quantity, quality, contractor compliance with contract requirements, or the requested progress payment amount. These requirements do not compel Government officials to accept work or services, approve contractor estimates, perform contract administration functions, or make payment prior to fulfilling their responsibilities. The contracting officer may specify a longer period for constructive acceptance or constructive approval, if required to afford the Government a reasonable opportunity to inspect and test the supplies furnished or to evaluate the services performed. The contracting officer must document in the contract file the justification for extending the constructive acceptance or approval period beyond 7 days.

(d) *Construction contracts.* (1) The due date for making payments on construction contracts is as follows:

(i) The due date for making progress payments based on contracting officer approval of the estimated amount and value of work or services performed, including payments for reaching milestones in any project, is 14 days after the designated billing office receives a proper payment request.

(A) If the designated billing office fails to annotate the payment request with the actual date of receipt at the time of receipt, the payment due date is the 14th day after the date of the contractor's payment request, provided the designated billing office receives a proper payment request and there is no disagreement over quantity, quality, or contractor compliance with contract requirements.

(B) The contracting officer may specify a longer period in the solicitation and resulting contract if required to afford the Government a reasonable opportunity to adequately inspect the work and to determine the adequacy of the contractor's performance under the contract. The contracting officer must document in the contract file the justification for extending the due date beyond 14 days.

(C) The contracting officer must not approve progress payment requests unless the certification and substantiation of amounts requested are provided as required by the clause at 52.232–5, Payments Under Fixed-Price Construction Contracts.

(ii) The due date for payment of any amounts retained by the contracting officer in accordance with the clause at 52.232–5, Payments Under Fixed-Price Construction Contracts, will be as specified in the contract or, if not specified, 30 days after approval by the contracting officer for release to the contractor. The contracting officer must base the release of retained amounts on the contracting officer's determination that satisfactory progress has been made.

(iii) The due date for final payments based on completion and acceptance of all work (including any retained amounts), and payments for partial deliveries that have been accepted by the Government (*e.g.*, each separate building, public work, or other division of the contract for which the price is stated separately in the contract) is as follows:

(A) The later of the following two events:

(*1*) The 30th day after the designated billing office receives a proper invoice from the contractor.

(*2*) The 30th day after Government acceptance of the work or services completed by the contractor. For a final invoice, when the payment amount is subject to contract settlement actions (e.g., release of contractor claims), acceptance is deemed to occur on the effective date of the contract settlement.

(B) If the designated billing office fails to annotate the invoice with the actual date of receipt at the time of receipt, the invoice payment due date is the 30th day after the date of the contractor's invoice, provided the designated billing office receives a proper invoice and there is no disagreement over quantity, quality, or contractor compliance with contract requirements.

(2) For the sole purpose of computing an interest penalty that might be due the contractor for payments described in paragraph (d)(1)(iii) of this section—

(i) Government acceptance or approval is deemed to occur constructively on the 7th day after the contractor completes the work or services in accordance with the terms and conditions of the contract, unless there is a disagreement over quantity, quality, contractor compliance with a contract requirement, or the requested amount;

(ii) If actual acceptance occurs within the constructive acceptance period, the Government must base the determination of an interest penalty on the actual date of acceptance;

(iii) The constructive acceptance requirement does not compel Government officials to accept work or services, approve contractor estimates, perform contract administration functions, or make payment prior to fulfilling their responsibilities; and

(iv) The contracting officer may specify a longer period for constructive acceptance or constructive approval in the solicitation and resulting contract, if required to afford the Government a reasonable opportunity to adequately inspect the work and to determine the adequacy of the contractor's performance under the contract. The contracting officer must document in the contract file the justification for extending the constructive acceptance or approval beyond 7 days.

(3) Construction contracts contain special provisions concerning contractor payments to subcontractors, along with special contractor certification requirements. The Office of Management and Budget has determined that these certifications must not be construed as final acceptance of the subcontractor's performance. The certification in 52.232–5(c) implements this determination; however, certificates are still acceptable if the contractor deletes paragraph (c)(4) of 52.232–5 from the certificate.

(4)(i) Paragraph (d) of the clause at 52.232–5, Payments under Fixed-Price Construction Contracts, and paragraph (e)(6) of the clause at 52.232–27, Prompt Payment for Construction Contracts, provide for the contractor to pay interest on unearned amounts in certain circumstances. The Government must recover this interest from subsequent payments to the contractor. Therefore, contracting officers normally must make no demand for payment. Contracting officers must—

(A) Compute the amount in accordance with the clause;

(B) Provide the contractor with a final decision; and

(C) Notify the payment office of the amount to be withheld.

(ii) The payment office is responsible for making the deduction of interest. Amounts collected in accordance with these provisions revert to the United States Treasury.

(e) *Food and specified items.*

If the items delivered are:	Payment must be made as close as possible to, but not later than:
(1) *Meat or meat food products*. As defined in section 2(a)(3) of the Packers and Stockyard Act of 1921 (7 U.S.C. 182(3)), and as further defined in Pub. L. 98–181, including any edible fresh or frozen poultry meat, any perishable poultry meat food product, fresh eggs, and any perishable egg product.	7th day after product delivery.
(2) *Fresh or frozen fish*. As defined in section 204(3) of the Fish and Seafood Promotion Act of 1986 (16 U.S.C. 4003(3)).	7th day after product delivery.
(3) *Perishable agricultural commodities*. As defined in section 1(4) of the Perishable Agricultural Commodities Act of 1930 (7 U.S.C. 499a(4)).	10th day after product delivery, unless another date is specified in the contract.
(4) *Dairy products*. As defined in section 111(e) of the Dairy Production Stabilization Act of 1983 (7 U.S.C. 4502(e)), edible fats or oils, and food products prepared from edible fats or oils. Liquid milk, cheese, certain processed cheese products, butter, yogurt, ice cream, mayonnaise, salad dressings, and other similar products fall within this classification. Nothing in the Act limits this classification to refrigerated products. If questions arise regarding the proper classification of a specific product, the contracting officer must follow prevailing industry practices in specifying a contract payment due date. The burden of proof that a classification of a specific product is, in fact, prevailing industry practice is upon the contractor making the representation.	10th day after a proper invoice has been received.

(f) *Multiple payment due dates.* Contracting officers may encourage, but not require, contractors to submit separate invoices for products with different payment due dates under the same contract or order. When an invoice contains items with different payment due dates (*i.e.*, a mixed invoice), the payment office will, subject to agency policy—

(1) Pay the entire invoice on the earliest due date; or

(2) Split invoice payments, making payments by the applicable due dates.

32.905 Payment documentation and process.

(a) *General.* Payment will be based on receipt of a proper invoice and satisfactory contract performance.

(b) *Content of invoices.* (1) A proper invoice must include the following items:

(i) Name and address of the contractor.

(ii) Invoice date. (Contractors should date invoices as close as possible to the date of mailing or transmission.)

(iii) Contract number or other authorization for supplies delivered or services performed (including order number and contract line item number).

(iv) Description, quantity, unit of measure, unit price, and extended price of supplies delivered or services performed.

(v) Shipping and payment terms (*e.g.*, shipment number and date of shipment, discount for prompt payment terms). Bill of lading number and weight of shipment will be shown for shipments on Government bills of lading.

(vi) Name and address of contractor official to whom payment is to be sent (must be the same as that in the contract or in a proper notice of assignment).

(vii) Name (where practicable), title, phone number, and mailing address of person to notify in the event of a defective invoice.

(viii) Taxpayer Identification Number (TIN). The contractor must include its TIN on the invoice only if required by agency procedures.

(ix) Electronic funds transfer (EFT) banking information.

(A) The contractor must include EFT banking information on the invoice only if required by agency procedures.

(B) If EFT banking information is not required to be on the invoice, in order for the invoice to be a proper invoice, the contractor must have submitted correct EFT banking information in accordance with the applicable solicitation provision (*e.g.*, 52.232–38, Submission of Electronic Funds Transfer Information with Offer), contract clause (*e.g.*, 52.232–33, Payment by Electronic Funds Transfer—Central Contractor Registration, or 52.232–34, Payment by Electronic Funds Transfer—Other Than Central Contractor Registration), or applicable agency procedures.

(C) EFT banking information is not required if the Government waived the requirement to pay by EFT.

(x) Any other information or documentation required by the contract (*e.g.*, evidence of shipment).

(2) Contractors should assign an identification number to each invoice.

(3) If the invoice does not comply with these requirements, the designated billing office must return it within 7 days after receipt (3 days on contracts for meat, meat food products, or fish; 5 days on contracts for perishable agricultural commodities, dairy products, edible fats or oils, and food products prepared from edible fats or oils), with the reasons why it is not a proper invoice. If such notice is not timely, then the designated billing office must adjust the due date for the purpose of determining an interest penalty, if any.

(c) *Authorization to pay.* All invoice payments must be supported by a receiving report or other Government documentation authorizing payment (*e.g.*, Government certified voucher). The agency receiving official should forward the receiving report or other Government documentation to the designated payment office by the 5th working day after Government acceptance or approval, unless other arrangements have been made. This period of time does not extend the due dates prescribed in this section. Acceptance should be completed as expeditiously as possible. The receiving report or other Government documentation authorizing payment must, as a minimum, include the following:

(1) Contract number or other authorization for supplies delivered or services performed.

(2) Description of supplies delivered or services performed.

(3) Quantities of supplies received and accepted or services performed, if applicable.

(4) Date supplies delivered or services performed.

(5) Date that the designated Government official—

(i) Accepted the supplies or services; or

(ii) Approved the progress payment request, if the request is being made under the clause at 52.232–5, Payments Under Fixed-Price Construction Contracts, or the clause at 52.232–10, Payments Under Fixed-Price Architect-Engineer Contracts.

(6) Signature, printed name, title, mailing address, and telephone number of the designated Government official responsible for acceptance or approval functions.

(d) *Billing office.* The designated billing office must immediately annotate each invoice with the actual date it receives the invoice.

(e) *Payment office.* The designated payment office will annotate each invoice and receiving report with the actual date it receives the invoice.

32.906 Making payments.

(a) *General.* The Government will not make invoice payments earlier than 7 days prior to the due dates specified in the contract unless the agency head determines—

(1) To make earlier payment on a case-by-case basis; or

(2) That the use of accelerated payment methods are necessary (see 32.903(a)(5)).

(b) *Payment office.* The designated payment office—

(1) Will mail checks on the same day they are dated;

(2) For payments made by EFT, will specify a date on or before the established due date for settlement of the payment at a Federal Reserve Bank;

(3) When the due date falls on a Saturday, Sunday, or legal holiday when Federal Government offices are closed, may make payment on the following working day without incurring a late payment interest penalty.

(c) *Partial deliveries.* (1) Contracting officers must, where the nature of the work permits, write contract statements of work and pricing arrangements that allow contractors to deliver and receive invoice payments for discrete portions of the work as soon as completed and found acceptable by the Government (see 32.102(d)).

(2) Unless specifically prohibited by the contract, the clause at 52.232–1, Payments, provides that the contractor is entitled to payment for accepted partial deliveries of supplies or partial performance of services that comply with all applicable contract requirements and for which prices can be calculated from the contract terms.

(d) *Contractor identifier.* If the contractor has assigned a contractor identifier (*e.g.*, an invoice number) to an invoice, each payment or remittance advice will use the contractor identifier (in addition to any Government or contract information) in describing any payment made.

(e) *Discounts.* When a discount for prompt payment is taken, the designated payment office will make payment to the contractor as close as possible to, but not later than, the end of the discount period. The discount period is specified by the contractor and is calculated from the date of the contractor's invoice. If the contractor has not placed a date on the invoice, the

due date is calculated from the date the designated billing office receives a proper invoice, provided the agency annotates such invoice with the date of receipt at the time of receipt. When the discount date falls on a Saturday, Sunday, or legal holiday when Government offices are closed, the designated payment office may make payment on the following working day and take a discount. Payment terms are specified in the clause at 52.232–8, Discounts for Prompt Payment.

32.907 Interest penalties.

(a) *Late payment.* The designated payment office will pay an interest penalty automatically, without request from the contractor, when all of the following conditions, if applicable, have been met:

(1) The designated billing office received a proper invoice.

(2) The Government processed a receiving report or other Government documentation authorizing payment, and there was no disagreement over quantity, quality, or contractor compliance with any contract requirement.

(3) In the case of a final invoice, the payment amount is not subject to further contract settlement actions between the Government and the contractor.

(4) The designated payment office paid the contractor after the due date.

(b) *Improperly taken discount.* The designated payment office will pay an interest penalty automatically, without request from the contractor, if the Government takes a discount for prompt payment improperly. The interest penalty is calculated on the amount of discount taken for the period beginning with the first day after the end of the discount period through the date when the contractor is paid.

(c) *Failure to pay interest.* (1) The designated payment office will pay a penalty amount, in addition to the interest penalty amount, only if—

(i) The Government owes an interest penalty of $1 or more;

(ii) The designated payment office does not pay the interest penalty within 10 days after the date the invoice amount is paid; and

(iii) The contractor makes a written demand to the designated payment office for additional penalty payment in accordance with paragraph (c)(2) of this section, postmarked not later than 40 days after the date the invoice amount is paid.

(2)(i) Contractors must support written demands for additional penalty payments with the following data. The Government must not request additional data. Contractors must—

(A) Specifically assert that late payment interest is due under a specific invoice, and request payment of all overdue late payment interest penalty and such additional penalty as may be required;

(B) Attach a copy of the invoice on which the unpaid late payment interest is due; and

(C) State that payment of the principal has been received, including the date of receipt.

(ii) If there is no postmark or the postmark is illegible—

(A) The designated payment office that receives the demand will annotate it with the date of receipt, provided the demand is received on or before the 40th day after payment was made; or

(B) If the designated payment office fails to make the required annotation, the Government will determine the demand's validity based on the date the contractor has placed on the demand; provided such date is no later than the 40th day after payment was made.

(d) *Disagreements.* (1) The payment office will not pay interest penalties if payment delays are due to disagreement between the Government and contractor concerning—

(i) The payment amount;

(ii) Contract compliance; or

(iii) Amounts temporarily withheld or retained in accordance with the terms of the contract.

(2) The Government and the contractor must resolve claims involving disputes, and any interest that may be payable in accordance with the Disputes clause.

(e) *Computation of interest penalties.* The Government will compute interest penalties in accordance with OMB prompt payment regulations at 5 CFR part 1315. These regulations are available via the Internet at http://www.fms.treas.gov/prompt/.

(f) *Unavailability of funds.* The temporary unavailability of funds to make a timely payment does not relieve an agency from the obligation to pay interest penalties.

32.908 Contract clauses.

(a) Insert the clause at 52.232–26, Prompt Payment for Fixed-Price Architect-Engineer Contracts, in solicitations and contracts that contain the clause at 52.232–10, Payments Under Fixed-Price Architect-Engineer Contracts.

(1) As authorized in 32.904(c)(2), the contracting officer may modify the date in paragraph (a)(4)(i) of the clause to specify a period longer than 7 days for constructive acceptance or constructive approval, if required to afford the Government a practicable opportunity to inspect and test the supplies furnished or evaluate the services performed.

(2) As provided in 32.903, agency policies and procedures may authorize amendment of paragraphs (a)(1)(i) and (ii) of the clause to insert a period shorter than 30 days (but not less than 7 days) for making contract invoice payments.

(b) Insert the clause at 52.232–27, Prompt Payment for Construction Contracts, in all solicitations and contracts for construction (see part 36).

(1) As authorized in 32.904(d)(1)(i)(B), the contracting officer may modify the date in paragraph (a)(1)(i)(A) of the clause to specify a period longer than 14 days if required to afford the Government a reasonable opportunity to adequately inspect the work and to determine the adequacy of the Contractor's performance under the contract.

(2) As authorized in 32.904(d)(2)(iv), the contracting officer may modify the date in paragraph (a)(4)(i) of the clause to specify a period longer than 7 days for constructive acceptance or constructive approval if required to afford the Government a reasonable opportunity to inspect and test the supplies furnished or evaluate the services performed.

(c) Insert the clause at 52.232–25, Prompt Payment, in all other solicitations and contracts, except when the clause at 52.212–4, Contract Terms and Conditions—Commercial Items, applies, or when payment terms and late payment penalties are established by other governmental authority (*e.g.*, tariffs).

(1) As authorized in 32.904(b)(1)(ii)(B)(*4*), the contracting officer may modify the date in paragraph (a)(5)(i) of the clause to specify a period longer than 7 days for constructive acceptance, if required to afford the Government a reasonable opportunity to inspect and test the supplies furnished or to evaluate the services performed, except in the case of a contract for the purchase of a commercial item, including a brand-name commercial item for authorized resale (*e.g.*, commissary items).

(2) As provided in 32.903, agency policies and procedures may authorize amendment of paragraphs (a)(1)(i) and (ii) of the clause to insert a period shorter than 30 days (but not less than 7 days) for making contract invoice payments.

32.909 Contractor inquiries.

(a) Direct questions involving—

(1) Delinquent payments to the designated billing office or designated payment office; and

(2) Disagreements in payment amount or timing to the contracting officer for resolution. The contracting officer must coordinate within appropriate contracting channels and seek the advice of other offices as necessary to resolve disagreements.

(b) Small business concerns may contact the agency's local small business specialist or representative from the Office of Small and Disadvantaged Business Utilization to obtain additional assistance related to payment issues, late payment interest penalties, and information on the Prompt Payment Act.

PART 52—SOLICITATION PROVISIONS AND CONTRACT CLAUSES

7. Amend section 52.212–4 by—

a. Revising the date of the clause;

b. Revising paragraph (g) of the clause (and removing the undesignated paragraph following paragraph (g)); and

c. Revising the second sentence of paragraph (i) of the clause to read as follows:

52.212–4 Contract Terms and Conditions—Commercial Items.

* * * * *

Contract Terms and Conditions—Commercial Items (Date)

* * * * *

(g) *Invoice.* (1) The Contractor shall submit an original invoice and three copies (or electronic invoice, if authorized) to the address designated in the contract to receive invoices. An invoice must include—

(i) Name and address of the Contractor;

(ii) Invoice date;

(iii) Contract number, contract line item number and, if applicable, the order number;

(iv) Description, quantity, unit of measure, unit price and extended price of the items delivered;

(v) Shipping number and date of shipment, including the bill of lading number and weight of shipment if shipped on Government bill of lading;

(vi) Terms of any discount for prompt payment offered;

(vii) Name and address of official to whom payment is to be sent;

(viii) Name, title, and phone number of person to notify in event of defective invoice; and

(ix) Taxpayer Identification Number (TIN). The Contractor shall include its TIN on the invoice only if required elsewhere in this contract.

(x) Electronic funds transfer (EFT) banking information.

(A) The Contractor shall include EFT banking information on the invoice only if required elsewhere in this contract.

(B) If EFT banking information is not required to be on the invoice, in order for the invoice to be a proper invoice, the Contractor shall have submitted correct EFT banking information in accordance with the applicable solicitation provision, contract clause (*e.g.*, 52.232–33, Payment by Electronic Funds Transfer—Central Contractor Registration, or 52.232–34, Payment by Electronic Funds Transfer—Other Than Central Contractor Registration), or applicable agency procedures.

(C) EFT banking information is not required if the Government waived the requirement to pay by EFT.

(2) Invoices will be handled in accordance with the Prompt Payment Act (31 U.S.C. 3903) and Office of Management and Budget (OMB) prompt payment regulations at 5 CFR part 1315. Contractors should assign an identification number to each invoice.

* * * * *

(i) *Payment.* * * * The Government will make payment in accordance with the Prompt Payment Act (31 U.S.C. 3903) and Office of Management and Budget (OMB) prompt payment regulations at 5 CFR part 1315. * * *

* * * * *

(End of clause)

8. Amend section 52.216–7 by revising the date of the clause and paragraph (a) to read as follows:

52.216–7 Allowable Cost and Payment.

* * * * *

Allowable Cost and Payment (Date)

(a) *Invoicing.* (1) The Government will make payments to the Contractor when requested as work progresses, but (except for small business concerns) not more often than once every 2 weeks, in amounts determined to be allowable by the Contracting Officer in accordance with Federal Acquisition Regulation (FAR) Subpart 31.2 in effect on the date of this contract and the terms of this contract. The Contractor may submit to an authorized representative of the Contracting Officer, in such form and reasonable detail as the representative may require, an invoice or voucher supported by a statement of the claimed allowable cost for performing this contract.

(2) Interim payments made prior to the final payment under the contract are contract financing payments, except interim payments for separately priced contract line items for which the Contractor provides with the invoice or voucher proof of Government acceptance and separately identifies the amount requested for accepted supplies or services. Contract financing payments are not subject to the interest penalty provisions of the Prompt Payment Act.

(3) The designated payment office will make interim payments for contract financing on the _____ [*Contracting Officer insert day as prescribed by Agency head; if not prescribed, insert "30th"*] day after the designated billing office receives a proper payment request. In the event that the Government requires an audit or other review of a specific payment request to ensure compliance with the terms and conditions of the contract, the designated payment office is not compelled to make payment by the specified due date.

* * * * *

(End of clause)

9. Amend section 52.216–13 by revising the date of the clause and paragraph (b) to read as follows:

52.216–13 Allowable Cost and Payment—Facilities.

* * * * *

Allowable Cost and Payment—Facilities (Date)

* * * * *

(b) *Invoicing.* (1) The Government will make payments to the Contractor when requested once each month. The Contractor may submit to an authorized representative of the Contracting Officer, in such form and reasonable detail as the representative may require, an invoice or voucher supported by a statement of the claimed allowable cost for the performance of this contract.

(2) Interim payments made prior to the final payment under the contract are contract financing payments, except interim payments for separately priced contract line items for which the Contractor provides with the invoice or voucher proof of Government acceptance and separately identifies the amount requested for accepted supplies or services. Contract financing payments are not subject to the interest penalty provisions of the Prompt Payment Act.

(3) The designated payment office will make interim payments for contract financing on the _____ [*Contracting Officer insert day as prescribed by Agency head; if not prescribed, insert "30th"*] day after the designated billing office receives a proper payment request. In the event that the Government requires an audit or other review of a specific payment request to ensure compliance with the terms and conditions of the contract, the designated payment office is not compelled to make payment by the specified due date.

* * * * *

(End of clause)

10. Amend section 52.232–7 by revising the date of the clause; by adding paragraph (h); and by revising Alternate II to read as follows:

52.232–7 Payments under Time-and-Materials and Labor-Hour Contracts.

* * * * *

Payments Under Time-and-Materials and Labor-Hour Contracts (Date)

* * * * *

(h) *Interim payments.* (1) Interim payments made prior to the final payment under the contract are contract financing payments, except interim payments for separately priced contract line items for which the Contractor provides with the invoice or voucher proof of Government acceptance and separately identifies the amount requested for accepted supplies or services. Contract financing payments are not subject to the

interest penalty provisions of the Prompt Payment Act.

(2) The designated payment office will make interim payments for contract financing on the _____ [*Contracting Officer insert day as prescribed by Agency head; if not prescribed, insert ''30th''*] day after the designated billing office receives a proper payment request. In the event that the Government requires an audit or other review of a specific payment request to ensure compliance with the terms and conditions of the contract, the designated payment office is not compelled to make payment by the specified due date.

(End of clause)

* * * * *

Alternate II (Date). If a labor-hour contract is contemplated, and if no specific reimbursement for materials furnished is intended, the Contracting Officer may add the following paragraph (i) to the basic clause:

(i) The terms of this clause that govern reimbursement for materials furnished are considered to have been deleted.

11. Amend section 52.232–8 by revising the date of the clause and the last sentence of paragraph (a) to read as follows:

52.232–8 Discounts for Prompt Payment.

* * * * *

Discounts for Prompt Payment (Date)

(a) * * * As an alternative to offering a discount for prompt payment in conjunction with the offer, offerors awarded contracts may include discounts for prompt payment on individual invoices.

* * * * *

(End of clause)

12. Amend section 52.232–16 by revising the date of the clause; by adding paragraph (l) to the end of the clause; and by revising Alternate II to read as follows:

52.232–16 Progress Payments.

* * * * *

Progress Payments (Date)

(l) *Due date.* The designated payment office will make progress payments on the _____ [*Contracting Officer insert date as prescribed by Agency head; if not prescribed, insert ''30th''*] day after the designated billing office receives a proper progress payment request. In the event that the Government requires an audit or other review of a specific progress payment request to ensure compliance with the terms and conditions of the contract, the designated payment office is not compelled to make payment by the specified due date. Progress payments are considered contract financing and are not subject to the interest penalty provisions of the Prompt Payment Act.

(End of clause)

* * * * *

Alternate II (Date). If the contract is a letter contract, add paragraphs (m) and (n). The amount specified in paragraph (n) must not exceed 80 percent applied to the maximum liability of the Government under the letter contract. Separate limits may be specified for separate parts of the work.

(m) Progress payments made under this letter contract shall, unless previously liquidated under paragraph (b) of this clause, be liquidated under the following procedures:

(1) If this letter contract is superseded by a definitive contract, unliquidated progress payments made under this letter contract shall be liquidated by deducting the amount from the first progress or other payments made under the definitive contract.

(2) If this letter contract is not superseded by a definitive contract calling for the furnishing of all or part of the articles or services covered under the letter contract, unliquidated progress payments made under the letter contract shall be liquidated by deduction from the amount payable under the Termination clause.

(3) If this letter contract is partly terminated and partly superseded by a contract, the Government will allocate the unliquidated progress payments to the terminated and unterminated portions as the Government deems equitable, and will liquidate each portion under the relevant procedure in paragraphs (m)(1) and (m)(2) of this clause.

(4) If the method of liquidating progress payments provided in this clause does not result in full liquidation, the Contractor shall immediately pay the unliquidated balance to the Government on demand.

(n) The amount of unliquidated progress payments shall not exceed _____ [*Contracting Officer specify dollar amount*].

* * * * *

13. Revise sections 52.232–25, 52.232–26, and 52.232–27 to read as follows:

52.232–25 Prompt Payment.

As prescribed in 32.908(c), insert the following clause:

Prompt Payment (Date)

Notwithstanding any other payment clause in this contract, the Government will make invoice payments under the terms and conditions specified in this clause. The Government considers payment as being made on the day a check is dated or the date of an electronic funds transfer (EFT). Definitions of pertinent terms are set forth in sections 2.101, 32.001, and 32.902 of the Federal Acquisition Regulation. All days referred to in this clause are calendar days, unless otherwise specified. (However, see paragraph (a)(4) of this clause concerning payments due on Saturdays, Sundays, and legal holidays.)

(a) *Invoice payments*—(1) *Due date.* (i) Except as indicated in paragraphs (a)(2) and (c) of this clause, the due date for making invoice payments by the designated payment office is the later of the following two events:

(A) The 30th day after the designated billing office receives a proper invoice from the Contractor (except as provided in paragraph (a)(1)(ii) of this clause).

(B) The 30th day after Government acceptance of supplies delivered or services performed. For a final invoice, when the payment amount is subject to contract settlement actions, acceptance is deemed to occur on the effective date of the contract settlement.

(ii) If the designated billing office fails to annotate the invoice with the actual date of receipt at the time of receipt, the invoice payment due date is the 30th day after the date of the Contractor's invoice, provided the designated billing office receives a proper invoice and there is no disagreement over quantity, quality, or Contractor compliance with contract requirements.

(2) *Certain food products and other payments.* (i) Due dates on Contractor invoices for meat, meat food products, or fish; perishable agricultural commodities; and dairy products, edible fats or oils, and food products prepared from edible fats or oils are—

(A) For meat or meat food products, as defined in section 2(a)(3) of the Packers and Stockyard Act of 1921 (7 U.S.C. 182(3)), and as further defined in Pub. L. 98–181, including any edible fresh or frozen poultry meat, any perishable poultry meat food product, fresh eggs, and any perishable egg product, as close as possible to, but not later than, the 7th day after product delivery.

(B) For fresh or frozen fish, as defined in section 204(3) of the Fish and Seafood Promotion Act of 1986 (16 U.S.C. 4003(3)), as close as possible to, but not later than, the 7th day after product delivery.

(C) For perishable agricultural commodities, as defined in section 1(4) of the Perishable Agricultural Commodities Act of 1930 (7 U.S.C. 499a(4)), as close as possible to, but not later than, the 10th day after product delivery, unless another date is specified in the contract.

(D) For dairy products, as defined in section 111(e) of the Dairy Production Stabilization Act of 1983 (7 U.S.C. 4502(e)), edible fats or oils, and food products prepared from edible fats or oils, as close as possible to, but not later than, the 10th day after the date on which a proper invoice has been received. Liquid milk, cheese, certain processed cheese products, butter, yogurt, ice cream, mayonnaise, salad dressings, and other similar products, fall within this classification. Nothing in the Act limits this classification to refrigerated products. When questions arise regarding the proper classification of a specific product, prevailing industry practices will be followed in specifying a contract payment due date. The burden of proof that a classification of a specific product is, in fact, prevailing industry practice is upon the Contractor making the representation.

(ii) If the contract does not require submission of an invoice for payment (*e.g.,* periodic lease payments), the due date will be as specified in the contract.

(3) *Contractor's invoice.* The Contractor shall prepare and submit invoices to the designated billing office specified in the contract. A proper invoice must include the items listed in paragraphs (a)(3)(i) through (a)(3)(x) of this clause. If the invoice does not comply with these requirements, the designated billing office will return it within 7 days after receipt (3 days for meat, meat

food products, or fish; 5 days for perishable agricultural commodities, dairy products, edible fats or oils, and food products prepared from edible fats or oils), with the reasons why it is not a proper invoice. The Government will take into account untimely notification when computing any interest penalty owed the Contractor.

(i) Name and address of the Contractor.

(ii) Invoice date. (The Contractor should date invoices as close as possible to the date of the mailing or transmission.)

(iii) Contract number or other authorization for supplies delivered or services performed (including order number and contract line item number).

(iv) Description, quantity, unit of measure, unit price, and extended price of supplies delivered or services performed.

(v) Shipping and payment terms (*e.g.,* shipment number and date of shipment, discount for prompt payment terms). Bill of lading number and weight of shipment will be shown for shipments on Government bills of lading.

(vi) Name and address of Contractor official to whom payment is to be sent (must be the same as that in the contract or in a proper notice of assignment).

(vii) Name (where practicable), title, phone number, and mailing address of person to notify in the event of a defective invoice.

(viii) Taxpayer Identification Number (TIN). The Contractor shall include its TIN on the invoice only if required elsewhere in this contract.

(ix) Electronic funds transfer (EFT) banking information.

(A) The Contractor shall include EFT banking information on the invoice only if required elsewhere in this contract.

(B) If EFT banking information is not required to be on the invoice, in order for the invoice to be a proper invoice, the Contractor shall have submitted correct EFT banking information in accordance with the applicable solicitation provision (*e.g.,* 52.232–38, Submission of Electronic Funds Transfer Information with Offer), contract clause (*e.g.,* 52.232–33, Payment by Electronic Funds Transfer—Central Contractor Registration, or 52.232–34, Payment by Electronic Funds Transfer—Other Than Central Contractor Registration), or applicable agency procedures.

(C) EFT banking information is not required if the Government waived the requirement to pay by EFT.

(x) Any other information or documentation required by the contract (*e.g.,* evidence of shipment).

(xi) The Contractor should assign an identification number to each invoice.

(4) *Interest penalty.* The designated payment office will pay an interest penalty automatically, without request from the Contractor, if payment is not made by the due date and the conditions listed in paragraphs (a)(4)(i) through (a)(4)(iii) of this clause are met, if applicable. However, when the due date falls on a Saturday, Sunday, or legal holiday, the designated payment office may make payment on the following working day without incurring a late payment interest penalty.

(i) The designated billing office received a proper invoice.

(ii) The Government processed a receiving report or other Government documentation authorizing payment, and there was no disagreement over quantity, quality, or Contractor compliance with any contract term or condition.

(iii) In the case of a final invoice for any balance of funds due the Contractor for supplies delivered or services performed, the amount was not subject to further contract settlement actions between the Government and the Contractor.

(5) *Computing penalty amount.* The Government will compute the interest penalty in accordance with the Office of Management and Budget prompt payment regulations at 5 CFR part 1315.

(i) For the sole purpose of computing an interest penalty that might be due the Contractor, Government acceptance is deemed to occur constructively on the 7th day (unless otherwise specified in this contract) after the Contractor delivers the supplies or performs the services in accordance with the terms and conditions of the contract, unless there is a disagreement over quantity, quality, or Contractor compliance with a contract provision. If actual acceptance occurs within the constructive acceptance period, the Government will base the determination of an interest penalty on the actual date of acceptance. The constructive acceptance requirement does not, however, compel Government officials to accept supplies or services, perform contract administration functions, or make payment prior to fulfilling their responsibilities.

(ii) The prompt payment regulations at 5 CFR 1315.10(c) do not require the Government to pay interest penalties if payment delays are due to disagreement between the Government and the Contractor over the payment amount or other issues involving contract compliance, or on amounts temporarily withheld or retained in accordance with the terms of the contract. The Government and the Contractor shall resolve claims involving disputes and any interest that may be payable in accordance with the clause at FAR 52.233–1, Disputes.

(6) *Discounts for prompt payment.* The designated payment office will pay an interest penalty automatically, without request from the Contractor, if the Government takes a discount for prompt payment improperly. The Government will calculate the interest penalty in accordance with the prompt payment regulations at 5 CFR part 1315.

(7) *Additional interest penalty.* (i) The designated payment office will pay a penalty amount, calculated in accordance with the prompt payment regulations at 5 CFR part 1315 in addition to the interest penalty amount only if—

(A) The Government owes an interest penalty of $1 or more;

(B) The designated payment office does not pay the interest penalty within 10 days after the date the invoice amount is paid; and

(C) The Contractor makes a written demand to the designated payment office for additional penalty payment, in accordance with paragraph (a)(7)(ii) of this clause, postmarked not later than 40 days after the invoice amount is paid.

(ii)(A) Contractors shall support written demands for additional penalty payments with the following data. The Government will not request any additional data. Contractors shall—

(*1*) Specifically assert that late payment interest is due under a specific invoice, and request payment of all overdue late payment interest penalty and such additional penalty as may be required;

(*2*) Attach a copy of the invoice on which the unpaid late payment interest is due; and

(*3*) State that payment of the principal has been received, including the date of receipt.

(B) If there is no postmark or the postmark is illegible—

(*1*) The designated payment office that receives the demand will annotate it with the date of receipt, provided the demand is received on or before the 40th day after payment was made; or

(*2*) If the designated payment office fails to make the required annotation, the Government will determine the demand's validity based on the date the Contractor has placed on the demand, provided such date is no later than the 40th day after payment was made.

(iii) The additional penalty does not apply to payments regulated by other Government regulations (*e.g.*, payments under utility contracts subject to tariffs and regulation).

(b) *Contract financing payment.* If this contract provides for contract financing, the Government will make contract financing payments in accordance with the applicable contract financing clause.

(c) *Fast payment procedure due dates.* If this contract contains the clause at 52.213–1, Fast Payment Procedure, payments will be made within 15 days after the date of receipt of the invoice.

(d) *Overpayments.* If the Contractor becomes aware of a duplicate payment or that the Government has otherwise overpaid on an invoice payment, the Contractor shall immediately notify the Contracting Officer and request instructions for disposition of the overpayment.

(End of clause)

52.232–26 Prompt Payment for Fixed-Price Architect-Engineer Contracts.

As prescribed in 32.908(a), insert the following clause:

Prompt Payment for Fixed-Price Architect-Engineer Contracts (Date)

Notwithstanding any other payment terms in this contract, the Government will make invoice payments under the terms and conditions specified in this clause. The Government considers payment as being made on the day a check is dated or the date of an electronic funds transfer. Definitions of pertinent terms are set forth in sections 2.101, 32.001, and 32.902 of the Federal Acquisition Regulation. All days referred to in this clause are calendar days, unless otherwise specified. (However, see paragraph (a)(3) of this clause concerning payments due on Saturdays, Sundays, and legal holidays.)

(a) *Invoice payments*—(1) *Due date.* The due date for making invoice payments is—

(i) For work or services completed by the Contractor, the later of the following two events:

(A) The 30th day after the designated billing office receives a proper invoice from the Contractor (except as provided in paragraph (a)(1)(iii) of this clause).

(B) The 30th day after Government acceptance of the work or services completed by the Contractor. For a final invoice, when the payment amount is subject to contract settlement actions (*e.g.,* release of claims), acceptance is deemed to occur on the effective date of the settlement.

(ii) The due date for progress payments is the 30th day after Government approval of Contractor estimates of work or services accomplished.

(iii) If the designated billing office fails to annotate the invoice or payment request with the actual date of receipt at the time of receipt, the payment due date is the 30th day after the date of the Contractor's invoice or payment request, provided the designated billing office receives a proper invoice or payment request and there is no disagreement over quantity, quality, or Contractor compliance with contract requirements.

(2) *Contractor's invoice.* The Contractor shall prepare and submit invoices to the designated billing office specified in the contract. A proper invoice must include the items listed in paragraphs (a)(2)(i) through (a)(2)(x) of this clause. If the invoice does not comply with these requirements, the designated billing office will return it within 7 days after receipt, with the reasons why it is not a proper invoice. When computing any interest penalty owed the Contractor, the Government will take into account if the Government notifies the Contractor of an improper invoice in an untimely manner.

(i) Name and address of the Contractor.

(ii) Invoice date. (The Contractor should date invoices as close as possible to the date of mailing or transmission.)

(iii) Contract number or other authorization for work or services performed (including order number and contract line item number).

(iv) Description of work or services performed.

(v) Delivery and payment terms (*e.g.,* discount for prompt payment terms).

(vi) Name and address of Contractor official to whom payment is to be sent (must be the same as that in the contract or in a proper notice of assignment).

(vii) Name (where practicable), title, phone number, and mailing address of person to notify in the event of a defective invoice.

(viii) Taxpayer Identification Number (TIN). The Contractor shall include its TIN on the invoice only if required elsewhere in this contract.

(ix) Electronic funds transfer (EFT) banking information.

(A) The Contractor shall include EFT banking information on the invoice only if required elsewhere in this contract.

(B) If EFT banking information is not required to be on the invoice, in order for the invoice to be a proper invoice, the Contractor shall have submitted correct EFT banking information in accordance with the applicable solicitation provision (*e.g.,* 52.232–38, Submission of Electronic Funds Transfer Information with Offer), contract clause (*e.g.,* 52.232–33, Payment by Electronic Funds Transfer—Central Contractor Registration, or 52.232–34, Payment by Electronic Funds Transfer—Other Than Central Contractor Registration), or applicable agency procedures.

(C) EFT banking information is not required if the Government waived the requirement to pay by EFT.

(x) Any other information or documentation required by the contract.

(xi) The Contractor should assign an identification number to each invoice.

(3) *Interest penalty.* The designated payment office will pay an interest penalty automatically, without request from the Contractor, if payment is not made by the due date and the conditions listed in paragraphs (a)(3)(i) through (a)(3)(iii) of this clause are met, if applicable. However, when the due date falls on a Saturday, Sunday, or legal holiday, the designated payment office may make payment on the following working day without incurring a late payment interest penalty.

(i) The designated billing office received a proper invoice.

(ii) The Government processed a receiving report or other Government documentation authorizing payment and there was no disagreement over quantity, quality, Contractor compliance with any contract term or condition, or requested progress payment amount.

(iii) In the case of a final invoice for any balance of funds due the Contractor for work or services performed, the amount was not subject to further contract settlement actions between the Government and the Contractor.

(4) *Computing penalty amount.* The Government will compute the interest penalty in accordance with the Office of Management and Budget prompt payment regulations at 5 CFR part 1315.

(i) For the sole purpose of computing an interest penalty that might be due the Contractor, Government acceptance or approval is deemed to occur constructively as shown in paragraphs (a)(4)(i)(A) and (B) of this clause. If actual acceptance or approval occurs within the constructive acceptance or approval period, the Government will base the determination of an interest penalty on the actual date of acceptance or approval. Constructive acceptance or constructive approval requirements do not apply if there is a disagreement over quantity, quality, Contractor compliance with a contract provision, or requested progress payment amounts. These requirements also do not compel Government officials to accept work or services, approve Contractor estimates, perform contract administration functions, or make payment prior to fulfilling their responsibilities.

(A) For work or services completed by the Contractor, Government acceptance is deemed to occur constructively on the 7th day after the Contractor completes the work or services in accordance with the terms and conditions of the contract.

(B) For progress payments, Government approval is deemed to occur on the 7th day after the designated billing office receives the Contractor estimates.

(ii) The prompt payment regulations at 5 CFR 1315.10(c) do not require the Government to pay interest penalties if payment delays are due to disagreement between the Government and the Contractor over the payment amount or other issues involving contract compliance, or on amounts temporarily withheld or retained in accordance with the terms of the contract. The Government and the Contractor shall resolve claims involving disputes, and any interest that may be payable in accordance with the clause at FAR 52.233–1, Disputes.

(5) *Discounts for prompt payment.* The designated payment office will pay an interest penalty automatically, without request from the Contractor, if the Government takes a discount for prompt payment improperly. The Government will calculate the interest penalty in accordance with 5 CFR part 1315.

(6) *Additional interest penalty.* (i) The designated payment office will pay a penalty amount, calculated in accordance with the prompt payment regulations at 5 CFR part 1315, in addition to the interest penalty amount only if—

(A) The Government owes an interest penalty of $1 or more;

(B) The designated payment office does not pay the interest penalty within 10 days after the date the invoice amount is paid; and

(C) The contractor makes a written demand to the designated payment office for additional penalty payment, in accordance with paragraph (a)(6)(ii) of this clause, postmarked not later than 40 days after the date the invoice amount is paid.

(ii)(A) Contractors shall support written demands for additional penalty payments with the following data. The Government will not request any additional data. Contractors shall—

(*1*) Specifically assert that late payment interest is due under a specific invoice, and request payment of all overdue late payment interest penalty and such additional penalty as may be required;

(*2*) Attach a copy of the invoice on which the unpaid late payment interest is due; and

(*3*) State that payment of the principal has been received, including the date of receipt.

(B) If there is no postmark or the postmark is illegible—

(*1*) The designated payment office that receives the demand will annotate it with the date of receipt, provided the demand is received on or before the 40th day after payment was made; or

(*2*) If the designated payment office fails to make the required annotation, the Government will determine the demand's validity based on the date the Contractor has placed on the demand, provided such date is no later than the 40th day after payment was made.

(iii) The additional penalty does not apply to payments regulated by other Government regulations (*e.g.,* payments under utility contracts subject to tariffs and regulation).

(b) *Contract financing payments.* If this contract provides for contract financing, the Government will make contract financing payments in accordance with the applicable contract financing clause.

(c) *Overpayments.* If the Contractor becomes aware of a duplicate payment or that the Government has otherwise overpaid

on an invoice payment, the Contractor shall immediately notify the Contracting Officer and request instructions for disposition of the overpayment.

(End of clause)

52.232–27 Prompt Payment for Construction Contracts.

As prescribed in 32.908(b), insert the following clause:

Prompt Payment for Construction Contracts (Date)

Notwithstanding any other payment terms in this contract, the Government will make invoice payments under the terms and conditions specified in this clause. The Government considers payment as being made on the day a check is dated or the date of an electronic funds transfer. Definitions of pertinent terms are set forth in sections 2.101, 32.001, and 32.902 of the Federal Acquisition Regulation. All days referred to in this clause are calendar days, unless otherwise specified. (However, see paragraph (a)(3) concerning payments due on Saturdays, Sundays, and legal holidays.)

(a) *Invoice payments*—(1) *Types of invoice payments.* For purposes of this clause, there are several types of invoice payments that may occur under this contract, as follows:

(i) Progress payments, if provided for elsewhere in this contract, based on Contracting Officer approval of the estimated amount and value of work or services performed, including payments for reaching milestones in any project.

(A) The due date for making such payments is 14 days after the designated billing office receives a proper payment request. If the designated billing office fails to annotate the payment request with the actual date of receipt at the time of receipt, the payment due date is the 14th day after the date of the Contractor's payment request, provided the designated billing office receives a proper payment request and there is no disagreement over quantity, quality, or Contractor compliance with contract requirements.

(B) The due date for payment of any amounts retained by the Contracting Officer in accordance with the clause at 52.232–5, Payments Under Fixed-Price Construction Contracts, is as specified in the contract or, if not specified, 30 days after approval by the Contracting Officer for release to the Contractor.

(ii) Final payments based on completion and acceptance of all work and presentation of release of all claims against the Government arising by virtue of the contract, and payments for partial deliveries that have been accepted by the Government (*e.g.,* each separate building, public work, or other division of the contract for which the price is stated separately in the contract).

(A) The due date for making such payments is the later of the following two events:

(*1*) The 30th day after the designated billing office receives a proper invoice from the Contractor.

(*2*) The 30th day after Government acceptance of the work or services completed by the Contractor. For a final invoice when the payment amount is subject to contract settlement actions (*e.g.,* release of claims), acceptance is deemed to occur on the effective date of the contract settlement.

(B) If the designated billing office fails to annotate the invoice with the date of actual receipt at the time of receipt, the invoice payment due date is the 30th day after the date of the Contractor's invoice, provided the designated billing office receives a proper invoice and there is no disagreement over quantity, quality, or Contractor compliance with contract requirements.

(2) *Contractor's invoice.* The Contractor shall prepare and submit invoices to the designated billing office specified in the contract. A proper invoice must include the items listed in paragraphs (a)(2)(i) through (a)(2)(xi) of this clause.

If the invoice does not comply with these requirements, the designated billing office must return it within 7 days after receipt, with the reasons why it is not a proper invoice.

When computing any interest penalty owed the Contractor, the Government will take into account if the Government notifies the Contractor of an improper invoice in an untimely manner.

(i) Name and address of the Contractor.

(ii) Invoice date. (The Contractor should date invoices as close as possible to the date of mailing or transmission.)

(iii) Contract number or other authorization for work or services performed (including order number and contract line item number).

(iv) Description of work or services performed.

(v) Delivery and payment terms (*e.g.,* discount for prompt payment terms).

(vi) Name and address of Contractor official to whom payment is to be sent (must be the same as that in the contract or in a proper notice of assignment).

(vii) Name (where practicable), title, phone number, and mailing address of person to notify in the event of a defective invoice.

(viii) For payments described in paragraph (a)(1)(i) of this clause, substantiation of the amounts requested and certification in accordance with the requirements of the clause at 52.232–5, Payments Under Fixed-Price Construction Contracts.

(ix) Taxpayer Identification Number (TIN). The Contractor shall include its TIN on the invoice only if required elsewhere in this contract.

(x) Electronic funds transfer (EFT) banking information.

(A) The Contractor shall include EFT banking information on the invoice only if required elsewhere in this contract.

(B) If EFT banking information is not required to be on the invoice, in order for the invoice to be a proper invoice, the Contractor shall have submitted correct EFT banking information in accordance with the applicable solicitation provision (*e.g.,* 52.232–38, Submission of Electronic Funds Transfer Information with Offer), contract clause (*e.g.,* 52.232–33, Payment by Electronic Funds Transfer—Central Contractor Registration, or 52.232–34, Payment by Electronic Funds Transfer—Other Than Central Contractor Registration), or applicable agency procedures.

(C) EFT banking information is not required if the Government waived the requirement to pay by EFT.

(xi) Any other information or documentation required by the contract.

(xii) The Contractor should assign an identification number to each invoice.

(3) *Interest penalty.* The designated payment office will pay an interest penalty automatically, without request from the Contractor, if payment is not made by the due date and the conditions listed in paragraphs (a)(3)(i) through (a)(3)(iii) of this clause are met, if applicable. However, when the due date falls on a Saturday, Sunday, or legal holiday, the designated payment office may make payment on the following working day without incurring a late payment interest penalty.

(i) The designated billing office received a proper invoice.

(ii) The Government processed a receiving report or other Government documentation authorizing payment and there was no disagreement over quantity, quality, Contractor compliance with any contract term or condition, or requested progress payment amount.

(iii) In the case of a final invoice for any balance of funds due the Contractor for work or services performed, the amount was not subject to further contract settlement actions between the Government and the Contractor.

(4) *Computing penalty amount.* The Government will compute the interest penalty in accordance with the Office of Management and Budget prompt payment regulations at 5 CFR part 1315.

(i) For the sole purpose of computing an interest penalty that might be due the Contractor for payments described in paragraph (a)(1)(ii) of this clause, Government acceptance or approval is deemed to occur constructively on the 7th day after the Contractor has completed the work or services in accordance with the terms and conditions of the contract. If actual acceptance or approval occurs within the constructive acceptance or approval period, the Government will base the determination of an interest penalty on the actual date of acceptance or approval. Constructive acceptance or constructive approval requirements do not apply if there is a disagreement over quantity, quality, or Contractor compliance with a contract provision. These requirements also do not compel Government officials to accept work or services, approve Contractor estimates, perform contract administration functions, or make payment prior to fulfilling their responsibilities.

(ii) The prompt payment regulations at 5 CFR 1315.10(c) do not require the Government to pay interest penalties if payment delays are due to disagreement between the Government and the Contractor over the payment amount or other issues involving contract compliance, or on amounts temporarily withheld or retained in accordance with the terms of the contract. The Government and the Contractor shall resolve claims involving disputes, and any interest that may be payable in accordance with the clause at FAR 52.233–1, Disputes.

(5) *Discounts for prompt payment.* The designated payment office will pay an

interest penalty automatically, without request from the Contractor, if the Government takes a discount for prompt payment improperly. The Government will calculate the interest penalty in accordance with the prompt payment regulations at 5 CFR part 1315.

(6) *Additional interest penalty.* (i) The designated payment office will pay a penalty amount, calculated in accordance with the prompt payment regulations at 5 CFR part 1315 in addition to the interest penalty amount only if—

(A) The Government owes an interest penalty of $1 or more;

(B) The designated payment office does not pay the interest penalty within 10 days after the date the invoice amount is paid; and

(C) The Contractor makes a written demand to the designated payment office for additional penalty payment, in accordance with paragraph (a)(6)(ii) of this clause, postmarked not later than 40 days after the date the invoice amount is paid.

(ii)(A) Contractors shall support written demands for additional penalty payments with the following data. The Government will not request any additional data. Contractors shall—

(*1*) Specifically assert that late payment interest is due under a specific invoice, and request payment of all overdue late payment interest penalty and such additional penalty as may be required;

(*2*) Attach a copy of the invoice on which the unpaid late payment interest was due; and

(*3*) State that payment of the principal has been received, including the date of receipt.

(B) If there is no postmark or the postmark is illegible—

(*1*) The designated payment office that receives the demand will annotate it with the date of receipt provided the demand is received on or before the 40th day after payment was made; or

(*2*) If the designated payment office fails to make the required annotation, the Government will determine the demand's validity based on the date the Contractor has placed on the demand, provided such date is no later than the 40th day after payment was made.

(b) *Contract financing payments.* If this contract provides for contract financing, the Government will make contract financing payments in accordance with the applicable contract financing clause.

(c) *Subcontract clause requirements.* The Contractor shall include in each subcontract for property or services (including a material supplier) for the purpose of performing this contract the following:

(1) *Prompt payment for subcontractors.* A payment clause that obligates the Contractor to pay the subcontractor for satisfactory performance under its subcontract not later than 7 days from receipt of payment out of such amounts as are paid to the Contractor under this contract.

(2) *Interest for subcontractors.* An interest penalty clause that obligates the Contractor to pay to the subcontractor an interest penalty for each payment not made in accordance with the payment clause—

(i) For the period beginning on the day after the required payment date and ending on the date on which payment of the amount due is made; and

(ii) Computed at the rate of interest established by the Secretary of the Treasury, and published in the **Federal Register,** for interest payments under section 12 of the Contract Disputes Act of 1978 (41 U.S.C. 611) in effect at the time the Contractor accrues the obligation to pay an interest penalty.

(3) *Subcontractor clause flowdown.* A clause requiring each subcontractor to—

(i) Include a payment clause and an interest penalty clause conforming to the standards set forth in paragraphs (c)(1) and (c)(2) of this clause in each of its subcontracts; and

(ii) Require each of its subcontractors to include such clauses in their subcontracts with each lower-tier subcontractor or supplier.

(d) *Subcontract clause interpretation.* The clauses required by paragraph (c) of this clause shall not be construed to impair the right of the Contractor or a subcontractor at any tier to negotiate, and to include in their subcontract, provisions that—

(1) *Retainage permitted.* Permit the Contractor or a subcontractor to retain (without cause) a specified percentage of each progress payment otherwise due to a subcontractor for satisfactory performance under the subcontract without incurring any obligation to pay a late payment interest penalty, in accordance with terms and conditions agreed to by the parties to the subcontract, giving such recognition as the parties deem appropriate to the ability of a subcontractor to furnish a performance bond and a payment bond;

(2) *Withholding permitted.* Permit the Contractor or subcontractor to make a determination that part or all of the subcontractor's request for payment may be withheld in accordance with the subcontract agreement; and

(3) *Withholding requirements.* Permit such withholding without incurring any obligation to pay a late payment penalty if—

(i) A notice conforming to the standards of paragraph (g) of this clause previously has been furnished to the subcontractor; and

(ii) The Contractor furnishes to the Contracting Officer a copy of any notice issued by a Contractor pursuant to paragraph (d)(3)(i) of this clause.

(e) *Subcontractor withholding procedures.* If a Contractor, after making a request for payment to the Government but before making a payment to a subcontractor for the subcontractor's performance covered by the payment request, discovers that all or a portion of the payment otherwise due such subcontractor is subject to withholding from the subcontractor in accordance with the subcontract agreement, then the Contractor shall—

(1) *Subcontractor notice.* Furnish to the subcontractor a notice conforming to the standards of paragraph (g) of this clause as soon as practicable upon ascertaining the cause giving rise to a withholding, but prior to the due date for subcontractor payment;

(2) *Contracting Officer notice.* Furnish to the Contracting Officer, as soon as practicable, a copy of the notice furnished to the subcontractor pursuant to subparagraph (e)(1) of this clause;

(3) *Subcontractor progress payment reduction.* Reduce the subcontractor's progress payment by an amount not to exceed the amount specified in the notice of withholding furnished under subparagraph (e)(1) of this clause;

(4) *Subsequent subcontractor payment.* Pay the subcontractor as soon as practicable after the correction of the identified subcontract performance deficiency, and—

(i) Make such payment within—

(A) Seven days after correction of the identified subcontract performance deficiency (unless the funds therefor must be recovered from the Government because of a reduction under subdivision (e)(5)(i)) of this clause; or

(B) Seven days after the Contractor recovers such funds from the Government; or

(ii) Incur an obligation to pay a late payment interest penalty computed at the rate of interest established by the Secretary of the Treasury, and published in the **Federal Register,** for interest payments under section 12 of the Contracts Disputes Act of 1978 (41 U.S.C. 611) in effect at the time the Contractor accrues the obligation to pay an interest penalty;

(5) *Notice to Contracting Officer.* Notify the Contracting Officer upon—

(i) Reduction of the amount of any subsequent certified application for payment; or

(ii) Payment to the subcontractor of any withheld amounts of a progress payment, specifying—

(A) The amounts withheld under subparagraph (e)(1) of this clause; and

(B) The dates that such withholding began and ended; and

(6) *Interest to Government.* Be obligated to pay to the Government an amount equal to interest on the withheld payments (computed in the manner provided in 31 U.S.C. 3903(c)(1)), from the 8th day after receipt of the withheld amounts from the Government until—

(i) The day the identified subcontractor performance deficiency is corrected; or

(ii) The date that any subsequent payment is reduced under subdivision (e)(5)(i) of this clause.

(f) *Third-party deficiency reports*—(1) *Withholding from subcontractor.* If a Contractor, after making payment to a first-tier subcontractor, receives from a supplier or subcontractor of the first-tier subcontractor (hereafter referred to as a ''second-tier subcontractor'') a written notice in accordance with section 2 of the Act of August 24, 1935 (40 U.S.C. 270b, Miller Act), asserting a deficiency in such first-tier subcontractor's performance under the contract for which the Contractor may be ultimately liable, and the Contractor determines that all or a portion of future payments otherwise due such first-tier subcontractor is subject to withholding in accordance with the subcontract agreement, the Contractor may, without incurring an obligation to pay an interest penalty under subparagraph (e)(6) of this clause—

(i) Furnish to the first-tier subcontractor a notice conforming to the standards of paragraph (g) of this clause as soon as practicable upon making such determination; and

(ii) Withhold from the first-tier subcontractor's next available progress payment or payments an amount not to exceed the amount specified in the notice of withholding furnished under subdivision (f)(1)(i) of this clause.

(2) *Subsequent payment or interest charge.* As soon as practicable, but not later than 7 days after receipt of satisfactory written notification that the identified subcontract performance deficiency has been corrected, the Contractor shall—

(i) Pay the amount withheld under paragraph (f)(1)(ii) of this clause to such first-tier subcontractor; or

(ii) Incur an obligation to pay a late payment interest penalty to such first-tier subcontractor computed at the rate of interest established by the Secretary of the Treasury, and published in the **Federal Register**, for interest payments under section 12 of the Contracts Disputes Act of 1978 (41 U.S.C. 611) in effect at the time the Contractor accrues the obligation to pay an interest penalty.

(g) *Written notice of subcontractor withholding.* The Contractor shall issue a written notice of any withholding to a subcontractor (with a copy furnished to the Contracting Officer), specifying—

(1) The amount to be withheld;

(2) The specific causes for the withholding under the terms of the subcontract; and

(3) The remedial actions to be taken by the subcontractor in order to receive payment of the amounts withheld.

(h) *Subcontractor payment entitlement.* The Contractor may not request payment from the Government of any amount withheld or retained in accordance with paragraph (d) of this clause until such time as the Contractor has determined and certified to the Contracting Officer that the subcontractor is entitled to the payment of such amount.

(i) *Prime-subcontractor disputes.* A dispute between the Contractor and subcontractor relating to the amount or entitlement of a subcontractor to a payment or a late payment interest penalty under a clause included in the subcontract pursuant to paragraph (c) of this clause does not constitute a dispute to which the Government is a party. The Government may not be interpleaded in any judicial or administrative proceeding involving such a dispute.

(j) *Preservation of prime-subcontractor rights.* Except as provided in paragraph (i) of this clause, this clause shall not limit or impair any contractual, administrative, or judicial remedies otherwise available to the Contractor or a subcontractor in the event of a dispute involving late payment or nonpayment by the Contractor or deficient subcontract performance or nonperformance by a subcontractor.

(k) *Non-recourse for prime contractor interest penalty.* The Contractor's obligation to pay an interest penalty to a subcontractor pursuant to the clauses included in a subcontract under paragraph (c) of this clause shall not be construed to be an obligation of the Government for such interest penalty. A cost-reimbursement claim may not include any amount for reimbursement of such interest penalty.

(l) *Overpayments.* If the Contractor becomes aware of a duplicate payment or that the Government has otherwise overpaid on an invoice payment, the Contractor shall immediately notify the Contracting Officer and request instructions for disposition of the overpayment.

(End of clause)

14. Amend section 52.232–29 by revising the date of the clause; by redesignating paragraph (g) as paragraph (h); by adding a new paragraph (g); and by revising newly designated paragraph (h) to read as follows:

52.232–29 Terms for Financing of Purchases of Commercial Items.

* * * * *

Terms for Financing of Purchases of Commercial Items (Date)

* * * * *

(g) *Dates for payment.* A payment under this clause is a contract financing payment and not subject to the interest penalty provisions of the Prompt Payment Act. The designated payment office will pay approved payment requests within 30 days of submittal of a proper request for payment.

(h) *Conflict between terms of offeror and clause.* In the event of any conflict between the terms proposed by the offeror in response to an invitation to propose financing terms (52.232–31) and the terms in this clause, the terms of this clause shall govern.

(End of clause)

15. Amend section 52.232–32 by revising the date of the clause and paragraph (c)(2) to read as follows:

52.232–32 Performance-Based Payments.

* * * * *

Performance-Based Payments (Date)

* * * * *

(c) * * *

(2) A payment under this performance-based payment clause is a contract financing payment under the Prompt Payment clause of this contract and not subject to the interest penalty provisions of the Prompt Payment Act. The designated payment office will pay approved requests on the _____ [*Contracting Officer insert day as prescribed by Agency head; if not prescribed, insert ''30th''*] day after receipt of the request for performance-based payment. However, the designated payment office is not required to provide payment if the Contracting Officer requires substantiation as provided in paragraph (c)(1) of this clause, or inquires into the status of an event or performance criterion, or into any of the conditions listed in paragraph (e) of this clause, or into the Contractor certification. The payment period will not begin until the Contracting Officer approves the request.

* * * * *

[FR Doc. 00–21799 Filed 8–25–00; 8:45 am]

BILLING CODE 6820–EP–P

Federal Register

Monday,
August 28, 2000

Part V

Federal Emergency Management Agency

44 CFR Chapter I and Part 295

Disaster Assistance: Cerro Grande Fire Assistance; Interim Final Rule

FEDERAL EMERGENCY MANAGEMENT AGENCY

44 CFR Chapter I and Part 295

RIN 3067–AD12

Disaster Assistance: Cerro Grande Fire Assistance

AGENCY: Office of Cerro Grande Fire Claims, Federal Emergency Management Agency (FEMA).

ACTION: Interim final rule.

SUMMARY: This interim final rule sets out the procedures for applicants to obtain assistance for injuries and property damage resulting from the Cerro Grande fire.

DATES: *Effective date:* August 28, 2000.

Comments date: Please submit comments to FEMA on or before October 27, 2000.

ADDRESSES: Please send comments in writing to the Rules Docket Clerk, Office of the General Counsel, Federal Emergency Management Agency, 500 C Street SW., room 840, Washington, DC 20472, or (email) *rules@fema.gov.* Please type or print in ink, and cite, where possible, the sections and paragraphs in this interim final rule to which each comment refers.

FOR FURTHER INFORMATION CONTACT: For information on the rulemaking process, please contact Nathan Bergerbest, Office of the General Counsel, Federal Emergency Management Agency, 500 C Street SW., room 840, Washington, DC 20472, (202) 646–2685, (telefax) (202) 646–4536, or (email) *nathan.bergerbest@fema.gov.*

For claims forms and customer service information, please contact the Office of Cerro Grande Fire Claims, P.O. Box 1480, Los Alamos, NM 87544–1480, telephone 1–888–748–1853.

SUPPLEMENTARY INFORMATION:

I. Background

On July 13, 2000 President Clinton signed into law the Cerro Grande Fire Assistance Act (CGFAA), incorporated as Division C of Public Law 106–246, the Military Construction Appropriations Act for Fiscal Year 2001. The Congress passed the Act to compensate as fully as possible those parties who suffered injuries and damages from the Cerro Grande Fire.

The Cerro Grande fire resulted from a prescribed fire ignited on May 4, 2000, by National Park Service fire personnel at the Bandelier National Monument, New Mexico under an approved prescribed fire plan. This fire burned approximately 47,750 acres in four counties and two Indian Pueblos, and destroyed over 200 residential structures.

The CGFAA requires FEMA to design and administer a program for fully compensating those who suffered personal injury, property losses, business losses and financial losses resulting from the Cerro Grande Fire.

In keeping with the letter and spirit of the legislation, FEMA intends to administer the CGFAA program with the utmost sensitivity for those who suffered from the fire. Our goal is to compensate Claimants for actual damages to the full extent permitted under the legislation.

II. Regulatory Approach

The CGFAA requires that FEMA publish implementing regulations within 45 days of the date upon which the law was enacted. As permitted by the Administrative Procedure Act this regulation is being published as an interim final rule. FEMA will accept comments on the Interim Final Rule for a period of 60 days. After the close of the comment period we will review the comments, make changes to the rule based on the comments and our experience administering the interim final rule, and will publish a final rule.

FEMA regrets that there was not enough time for a formal public notice and comment period prior to the publication of this rule. However, we want to assure prospective Claimants that this rule was not drafted in a vacuum. The drafting team reviewed the floor statements by members of the New Mexico congressional delegation and news accounts from the Los Alamos Monitor, the Santa Fe New Mexican, the Albuquerque Journal and the Albuquerque Tribune. The team also considered unsolicited letters submitted to the Rules Docket Clerk by fire survivors and others.[1] David L. de Courcy, the designated Director of the Office of Cerro Grande Fire Claims, met with representatives of the State of New Mexico, the Pueblo of San Ildefonso and the Pueblo of Santa Clara, the four counties most immediately affected and the Cerro Grande Fire Survivors Association, to obtain input. FEMA also consulted with a number of Federal agencies, including the Department of Energy, the Department of the Interior and the Small Business Administration.

Sectional Analysis

This is the portion of the preamble that discusses each subpart of the rule and explains the intent of selected sections. Terms that are capitalized in this part of the preamble are defined in Subpart F—§ 295.50 of the rule.

We invite comments on whether further explanation of any of the sections in the rule is needed, whether or not we discuss the section in the preamble.

Subpart A—Overview of the Claims Process

Subpart A provides an overview of the claims process established by the remainder of this rule.

Subpart B—Bringing a Claim Under the CGFAA

Subpart B explains procedural issues involved in filing a claim under the CGFAA. The act requires that Claimants make a binding, irrevocable choice to present all of their claims against the United States through one of three mechanisms. These mechanisms are (i) the CGFAA or (ii) the Federal Tort Claims Act or (iii) bringing a civil lawsuit against the United States (if authorized by another law). The only way to bring a claim under the CGFAA is to file a Notice of Loss with FEMA. FEMA can provide you with information on the CGFAA.

Before passage of the CGFAA, the National Park Service opened a claims information office in Los Alamos. Potential claimants were encouraged to submit a Claims Information Form describing the nature and extent of their fire-related losses. These forms clearly stated that a person who submits a form has not made a claim against the United States. Anyone who submitted a Claims Information Form to the National Park Service is eligible to make a claim under the CGFAA, but must file a Notice of Loss with FEMA in order to do so.

National Park Service claims personnel reported that some people desired to immediately file a Federal Tort Claims Act claim before they were aware of the option to bring a claim under the CGFAA. Section 295.12(d) of this rule provides anyone who filed a Federal Tort Claims Act claim prior to August 28, 2000 with the opportunity to withdraw it not later than October 2, 2000 and to proceed under the CGFAA. The same opportunity is extended to anyone who brought a civil action against the United States prior to August 28, 2000 and is dismissed as a party by October 27, 2000. However, anyone who

[1] We will respond to these comments and suggestions in the preamble to the final rule. All letters submitted to the Rules Docket Clerk will be considered in preparing the final rule. Letters addressed to other FEMA personnel may not be entered into the Rules Docket. To be sure that your comments are considered in preparation of the final rule they should be mailed to the Rules Docket Clerk, Federal Emergency Management Agency, 500 C Street, SW, room 840, Washington, DC 20472, or sent by e-mail to *rules@fema.gov.*

files a Federal Tort Claims Act claim or a civil action against the United States for fire-related claims on or after August 28, 2000 is barred from filing a Notice of Loss under the CGFAA and must seek compensation under one of the other mechanisms.

FEMA has also decided to allow anyone who submits a Notice of Loss on or before October 1, 2000 to withdraw it not later than October 1, 2000. This grace period was provided out of concern that some people may submit a Notice of Loss under the CGFAA before they have had an opportunity to read these regulations and learn more about the program. Anyone who withdraws a Notice of Loss on or before October 1, 2000 will be permitted to re-file under the CGFAA at a later date or pursue one of the other available remedies.

Section 295.13 describes the procedures to be used by insurers (or other third parties with the rights of a subrogee) for submitting subrogation claims. The procedures described in subsections (c) through (f) of § 295.10 apply with equal vigor to subrogation claims. No subrogation claim will be considered unless the submitting party elects the CGFAA as its exclusive mechanism for seeking compensation from the United States for all Cerro Grande Fire-related subrogation claims and any other Cerro Grande Fire-related losses.

Section 295.14 prohibits assignment of claims. It also prohibits assignment of the right to receive payment for claims. FEMA intends to make CGFAA compensation payments only to the injured Claimant.

Subpart C—Allowable Compensation

Subpart C describes the compensation available under the CGFAA. Section 104(c)(3) of the CGFAA limits payments under the act to ''actual compensatory damages measured by injuries suffered.'' Section 295.21(a) of the rule defines the term ''compensatory damages.'' We view the terms ''compensation,'' ''damages'' and ''compensatory damages'' under the CGFAA as synonyms and use them interchangeably in the rule. FEMA may only compensate Claimants for damages that resulted from the Cerro Grande Fire.

Section 295.21(b) provides that FEMA will not reimburse Claimants for attorney fees or agent fees. Our treatment of attorney and agent fees is consistent with § 104(j) of the CGFAA. Section 104(j) limits the fees that an attorney or agent may charge a client. It does not provide that FEMA will reimburse Claimants for attorney or agent fees. Section 291.21(b) also provides that FEMA will not reimburse Claimants for taxes due as a consequence of receiving a payment under the CGFAA. Claimants are advised to consult with their tax advisors about whether any taxes will be due as a consequence of receiving a CGFAA payment. FEMA cannot provide tax information or advice.

Sections 295.21(d) through (i) explain how FEMA plans to approach the types of claims that we expect to encounter most frequently. We made a deliberate choice to address some, but not all, of the several categories of damages allowable under Section 104(d)(4) of the Act. The reader should not infer an intention to limit the right of Claimants from this decision. Claimants may recover all damages allowable under Section 104(d)(4) of the Act. We also chose not to speculate about damage theories that cannot be accommodated under the CGFAA. We invite your comments on this approach.

We encourage Claimants to include all of their fire-related losses in the claim. Each claim will be reviewed on its unique facts and merits. Generally speaking, we will determine compensatory damages in accordance with the laws of the State of New Mexico, unless the CGFAA is more generous. If we deny a claim, we will explain our reasons for doing so.

Section 295.21(d) explains our approach to calculating ''replacement costs'' for those who lost their homes. Replacement cost means whatever it reasonably costs a homeowner to restore his or her home and lot to pre-fire condition. We will calculate replacement costs using post-fire construction costs in northern New Mexico. We will compensate homeowners to rebuild their dwellings in accordance with whatever building codes and standards are applicable at the time that their claim is processed, regardless of whether the destroyed dwelling was in compliance with codes and standards before the fire.

FEMA plans to make a replacement cost award to each Claimant whose home was destroyed by the fire, whether or not the homeowner elects to rebuild. The homeowner is free to spend this money as he or she sees fit. In order to process claims within the six-month time frame anticipated by the CGFAA, FEMA may be required to estimate a homeowner's replacement costs well before construction is completed. Homeowners who decide to rebuild and later find that their actual replacement costs exceeded FEMA's estimate may supplement or reopen their claims under §§ 295.33 and 295.34 of this rule. We request comments on how long a period should be allowed for homeowners to be able to reopen their claims for this purpose.

Compensation for mitigation under § 295.21(d) is only available for homeowners who elect to rebuild. FEMA may award compensation over and above replacement costs for the cost of mitigation measures that will reduce the property's vulnerability to future risks of wildfire, flood or other natural hazard related to the Cerro Grande Fire. Homeowners are encouraged to consider rebuilding to the standards contained in the International Building Code 2000 and the Uniform Fire Code 2000, regardless of whether these codes have been adopted in their communities. Homeowners who wish to avail themselves of the opportunity to receive a mitigation award must notify FEMA well in advance of beginning construction. Any applicable environmental or historic preservation review of the homeowner's proposed mitigation expenditure must be completed before construction starts.

Section 295.21(i) addresses compensation to Indian tribes, Tribal Members and households that include one or more Tribal Members for subsistence losses. Section 295.21(i) does not address the right of Indian tribes to seek compensation for tribal property that was damaged or destroyed by the fire. These losses may be more appropriately characterized as ''property losses,'' ''business losses'' or ''financial losses,'' (rather than subsistence losses) and may be compensated under other provisions of the CGFAA. However, FEMA would appreciate comments directed to this issue. The definition of Injured Person that appears in § 295.50 establishes that Indian tribes that suffered losses resulting from the Cerro Grande Fire may seek compensation under the CGFAA, notwithstanding that title to the property affected by the fire may be held in trust for the tribe by the United States.

During the fire and its immediate aftermath, many individuals, charitable organizations, businesses, and other entities made voluntary donations of cash, goods, and services to assist the fire fighting and fire recovery effort and to help those affected by the fire. We request comment on whether there are any circumstances in which these voluntary contributions should be treated as ''losses'' appropriate for compensation under the CGFAA.

Section 295.21(j) addresses various duplication of benefits issues. Claimants are not required to submit their claims to their insurance company nor are they required to pursue a settlement from their insurance company after filing a

CGFAA claim. We encourage Claimants to continue to pursue their insurance claims because this may expedite the process of reconstructing documentation that will be helpful to the CGFAA process. If a Claimant has received or expects to receive a payment from an insurance company, the actual or anticipated payment must be disclosed.

Subpart D—Claims Evaluation

Subpart D explains what will happen after the claim is filed. It explains how claims are to be documented, how we will evaluate the claim and how Claimants can obtain payment if they agree with our evaluation.

Section 295.30 explains our approach to documentation of losses. Early in the process we expect the Claimant and the Claims Reviewer to confer on a strategy for documenting the claim. Flexibility is key. We expect that Claimants will provide whatever documentation is reasonably available. FEMA recognizes that some of a Claimant's documentation may have been destroyed by the fire. Claims Reviewers will assist Claimants in locating documentation that may be available from third-party sources. Claimants may be asked to sign release forms authorizing our Claims Reviewers to obtain information and documentation from third-party sources.

Early in the process, Claimants should also discuss with the Claims Reviewer whether FEMA will require an appraisal or other third-party opinion of value to evaluate a claim. FEMA may order appraisals and third-party opinions directly or request the Claimant to obtain them. Section 295.31 provides that if FEMA requests the Claimant to provide an appraisal or other third party opinion then FEMA will reimburse the Claimant for the reasonable cost of obtaining it.

Section 295.32 explains how FEMA will evaluate claims. Claims Reviewers do not have the authority to determine whether a claim is eligible for compensation or how much compensation will be paid. Their role is to work with the Claimant to obtain relevant evidence, analyze the evidence and make a recommendation to an Authorized Official. Only the Authorized Official has the authority to decide claims.

When the Authorized Official has decided a claim he or she will send a written notification to the Claimant's address as it appears in the Office of Cerro Grande Fire Claims records. The date that appears on this notification starts a 120-day clock during which a Claimant must either accept the finding or appeal it. The procedure for appealing an Authorized Official's Determination is explained in § 295.41. If the Claimant has not acted at the end of this period he or she may forfeit further rights to appeal. The Director of the Office of Cerro Grande Fire Claims may modify this deadline if good cause exists.

Section 104(d)(1)(A)(i) of the Act requires that FEMA determine and fix the amount to be paid for a claim within 180 days after the claim is submitted. To meet this deadline FEMA may ask Claimants to sign the Proof of Loss and require that our Authorized Officials render a definitive determination more expeditiously than some Claimants would prefer. We understand that some prospective Claimants would like to receive a partial payment on their claims but delay FEMA's definitive determination until they can completely inventory their losses or estimate their damages. Sections 295.33 and 295.34 are intended to address these concerns.

Section 295.33 provides the flexibility for a Claimant to make additional claims after submitting a Proof of Loss. Section 295.34 provides for reopening a claim after the Claimant has submitted a Release and Certification Form. We invite your comments about whether these provisions adequately address your concerns. Section 104(b) of the Act suggests that we cannot reimburse Claimants for losses that are brought to our attention after August 28, 2002, except for mitigation costs that may be incurred until August 28, 2003 under a more specific provision of the Act. We invite your comments on whether FEMA has reasonably interpreted the CGFAA as establishing August 28, 2002 as a firm deadline by which Claimants must notify FEMA of the amount of their total Cerro Grande Fire-related losses (except for mitigation costs).

Section 295.35 requires that Claimants grant FEMA's Office of the Inspector General and the General Accounting Office access to the subject property and to records and information in their control that is relevant to their claims for purposes of investigation and audit. The CGFAA requires that the General Accounting Office, a legislative branch agency, audit claims and payments made under the CGFAA. FEMA's Office of the Inspector General is responsible for investigating charges of fraud and abuse and auditing FEMA's programs.

Section 295.36 addresses confidentiality of information provided by Claimants. The Privacy Act protects the confidentiality of information provided by individual Claimants. This information may only be disclosed with the consent of the Claimant or pursuant to a routine use, which has been disclosed to the public. FEMA has published a separate notice in today's **Federal Register** that addresses Privacy Act protection for records maintained by the Office of Cerro Grande Fire Claims. Confidential, proprietary and trade secret information provided by entities, such as businesses, tribes and government agencies, are not eligible for Privacy Act protection but may be exempt from disclosure under the Freedom of Information Act. Non-individual Claimants are encouraged to discuss the need to protect confidential information from disclosure with FEMA before the information is submitted. FEMA may not be able to prevent the disclosure of this information unless we are aware of its confidential nature.

Subpart E—Dispute Resolution

Subpart E discusses a Claimant's rights if he or she disagrees with our evaluation of the claim. Claimants are afforded a right to appeal our initial determination to the Director of the Office of Cerro Grande Fire Claims. This is referred to as an Administrative Appeal. If the Claimant is dissatisfied with the Administrative Appeal decision he or she may put the matter to binding arbitration or seek judicial review in federal court.

Section 295.41 describes the Administrative Appeal process. If a Claimant disagrees with the conclusions of FEMA's Authorized Official under § 295.32 he or she must pursue an Administrative Appeal before initiating arbitration or seeking judicial review. Only the Administrative Appeal decision constitutes the final decision of the Director for purposes of Section 104(d)(2)(B) and 104(i)(1) of the Act. The Office of Cerro Grande Fire Claims plans to establish a voluntary mediation option for Claimants that would prefer to seek a negotiated settlement of the claim.

Section 295.41(d) allows the Claimant to present any relevant factual evidence concerning the issues under appeal, even if it was not presented earlier. FEMA requests that Claimants provide the Claims Reviewer with all relevant evidence supporting the claim. Our goal is to render equitable compensation decisions the first time, not to encourage Administrative Appeals or further proceedings.

We note that while § 295.41(d) allows Claimants to submit factual evidence in support of their claim for the first time in the Administrative Appeal, Claimants who wish to raise new claims or damage theories after submitting a Proof of Loss should ask the Director of the Office of

Cerro Grande Fire Claims to supplement their claim under § 295.33 of these regulations.

Section 104(h)(3) of the CGFAA requires that FEMA establish procedures under which a dispute regarding a claim may be settled by arbitration. Section 295.42 establishes these procedures. Any issue decided in an Administrative Appeal may be referred to binding arbitration. Arbitration decisions are not subject to any further appeal or review and are binding on the Claimant and on FEMA. Section 295.42(d) provides that one arbitrator will hear disputes. FEMA considered the alternative of using panels of three arbitrators. After consulting with alternative dispute resolution experts in the public and private sectors our Office of Dispute Resolution determined that disputes involving $5 million or less are rarely decided by more than one arbitrator. FEMA anticipates that most claims submitted under the CGFAA will fall well below this threshold. We invite your comments on whether the size and composition of arbitration panels should vary depending upon the amount in dispute or the complexity of the issues.

Section 295.43 discusses judicial review of the Administrative Appeal decision. Claimants should be aware that the § 104(i)(3) of the CGFAA requires that the court uphold the Administrative Appeal decision if it is supported by substantial evidence on the record considered as a whole.

Administrative Procedure Act Determination

Section 104(f)(1) of the CGFAA, requires that notwithstanding any other provision of law, not later than 45 days after the date of enactment of this Act the Director of FEMA is to publish interim final regulations for the processing and payment of claims under the Act. In order to comply with that mandate and in order to expedite the receipt and processing of Cerro Grande fire assistance applications, FEMA is publishing this interim final rule without opportunity for prior public comment under the Administrative Procedure Act (APA), 5 U.S.C. 553. In accordance with 5 U.S.C. 553(d)(3) I find that there is good cause for the interim final rule to take effect immediately upon publication in the **Federal Register** in order to meet the urgent needs of those injured as a result of the Cerro Grande fire and to comply with the mandates of the Cerro Grande Fire Assistance Act..

We invite comments of the public on this interim final rule. Please send comments to FEMA in writing on or before Friday, October 27, 2000. After we have reviewed and evaluated the comments we will publish a final rule as required by the APA.

National Environmental Policy Act

This interim final rule involves claims and payment of claims to persons injured as a result of the Cerro Grande fire. Such claims will be paid with no substantive relation to the claimants' subsequent use of the money for prescribed activities and with no limitations on how claimants will use the money. Such activities under the rule are not subject to the National Environmental Policy Act (NEPA).

The interim final rule provides for compensation to mitigate future damages. We cannot identify what those expenditures will be and cannot perform a NEPA review at this stage. As claimants propose mitigation expenditures each will be subject to NEPA review. We have not prepared an environmental assessment of this interim final rule.

Paperwork Reduction Act.

This interim rule contains several information collection requirements subject to the Paperwork Reduction Act of 1995 (44 U.S.C. Chapter 35). Under the Paperwork Reduction Act, a person may not be penalized for failing to comply with an information that does not display an currently valid OMB control number.

FEMA submitted to OMB for emergency approval the Notice of Loss form (see below) to allow FEMA to begin accepting claims prior to publication of these regulations. On August 9, 2000, OMB assigned the Notice of Loss information collection OMB control number 3067–0280, expiring on November 30, 2000. FEMA will resubmit the Notice of Loss information collection for a three-year approval after the 60-day comment period, in accordance with the procedures described in 5 CFR 1320.12. FEMA will separately request approval for the other information collections in this interim rule, as required by 5 CFR 1320.12. FEMA will not implement these other information collection requirements until OMB approves them and assigns them an OMB control number. FEMA will publish a separate **Federal Register** notice when the information collections are submitted to OMB and again when OMB has approved them.

FEMA therefore requests comments on the information collections in this interim final rule.

Supplementary Information. This collection is in accordance with FEMA's responsibilities under 44 CFR 295 to provide assistance to claimants who were injured as a result of the Cerro Grande fire. The funds that we provide will help to alleviate the suffering and damage that resulted from the Cerro Grande fire.

Collection of Information.

Title. Cerro Grande Fire Assistance Claims.

Type of Information Collection. New.

(1) *Information Collection.*

(i) Notice of Loss under the Cerro Grande Fire Assistance Act.

Abstract.

(1) *Notice of Loss.* The Notice of Loss under the Cerro Grande Fire Assistance Act is a form through which a claimant makes a binding, conclusive and irrevocable election to have all Injuries resulting from the Cerro Grande Fire reviewed by FEMA for possible compensation under the CGFAA.

(2) *Subrogation Notice of Loss.* The Subrogation Notice of Loss under the Cerro Grande Fire Assistance Act is a form through which an insurance company makes a binding, conclusive and irrevocable election to have all subrogation claims of the company resulting from the Cerro Grande Fire reviewed by FEMA for possible compensation under the CGFAA.

(3) *Release and Certification Form.* The Release and Certification form is a document prescribed by § 104(e) of the CGFAA that a Claimant must complete and return in order to receive payment of compensation awarded pursuant to the CGFAA. We invite comments on whether this form is a collection of information or an affidavit exempted from the Paperwork Reduction Act.

(4) *Interview.* Once a Claimant files a Notice of Loss, the Claimant and the Claims Reviewer will meet to discuss the nature of the loss sustained by the Claimant, the documentation that the Claimant has or can obtain, insurance claims made, to be made, or insurance payments that the Claimant has received, and additional documents, such as affidavits, that FEMA may need to substantiate the claims. FEMA estimates that this interview will take 1.5–2 hours, on average, and further estimates it will interview approximately 18,000 claimants, for a total hourly burden of 27,000 to 36,000 hours.

(5) *Documentation of Claims.* Following the interview the Claimant and the Claims Reviewer will work both independently and together to obtain the documentation needed to substantiate the claims. We are not able to estimate with reasonable accuracy the

burden that this places on the Claimant. In many, if not most cases involving private homes we expect that Claimants will have information on their insurance coverage for their home and any vehicles, but generally will not have inventories or appraisals of the contents of their homes. In many cases, records of the contents of the homes may have been destroyed in the fire. For purposes of this Act, we are estimating that eligible claimants will average 20 hours in order to document their losses, for a total hourly burden of 360,000 hours.

(6) *Proof of Loss.* The Proof of Loss form is a statement, signed by a Claimant under penalty of perjury and subject to the provisions of 18 U.S.C. 1001 that the claim in true and correct, attesting to the nature and extent of the Claimant's injuries.

Affected Public: State, local and tribal governments, private sector businesses, not-for-profit organizations, and individuals and households. The forms are used to allow claimants to apply for compensation under the Cerro Grande Fire Assistance Act.

Estimated Total Annual Burden Hours.

Type of collection	Number of respondents	Avg. hours per response	Avg. annual burden hours
Notice of loss	18,000	.75	13,500
Subrogation notice of loss	12,000	1.5	18,000
Interview	18,000	1.5–2	27,000–36,000
Documentation of claims	18,000	20	360,000
Proof of loss	18,000	0.5	9,000

Estimated Cost. FEMA has not calculated the costs associated with this collection due to the emergency nature of the funding availability and claim approval process.

Other Forms and Documentation. FEMA will require other forms, such as Proof of Loss, Release and Certification, and other collections of information, including documentation for claims and mitigation expenditures, and interviews. We will process these collections of information when developed under OMB's clearance procedures in accordance with OMB regulations.

Comments: We ask for written comments to: (a) Evaluate whether the proposed data collection is necessary for the Agency's proper performance of the program, including whether the information will have practical utility; (b) evaluate the accuracy of the Agency's estimate of the burden of the proposed collection of information, including the validity of the methodology and assumptions used; (c) enhance the quality, utility, and clarity of the information to be collected; and (d) minimize the burden of the collection of information on those who are to respond, including through the use of appropriate automated, electronic, mechanical, or other technological collection techniques or other forms of information technology, e.g., permitting electronic submission of responses. Please send comments on or before October 27, 2000.

ADDRESSES: Interested persons should submit written comments to the Desk Officer for the Federal Emergency Management Agency, Office of Management and Budget, Office of Information and Regulatory Affairs, 725—17th Street, NW., Washington, DC 20503 on or before Wednesday, September 27, 2000. We will continue to accept comments through Friday, October 27, 2000. Please send written comments on the collection of information, including our burden estimates to Muriel B. Anderson, FEMA Information Collections Officer, Federal Emergency Management Agency, 500 C Street, SW., room 316, Washington, DC 20472, (telephone) (202) 646–2625, (telefax) (202) 646–3524, or (e-mail) *muriel.anderson@fema.gov.*

FOR FURTHER INFORMATION CONTACT: Contact Ms. Anderson at (202) 646–2625 for copies of the proposed collection of information.

Executive Order 12866, Regulatory Planning and Review

Under Executive Order 12866, 58 FR 51735, October 4, 1993, a significant regulatory action is subject to OMB review and the requirements of the Executive Order. The Executive Order defines ''significant regulatory action'' as one that is likely to result in a rule that may:

(1) Have an annual effect on the economy of $100 million or more or adversely affect in a material way the economy, a sector of the economy, productivity, competition, jobs, the environment, public health or safety, or State, local, or tribal governments or communities;

(2) Create a serious inconsistency or otherwise interfere with an action taken or planned by another agency;

(3) Materially alter the budgetary impact of entitlements, grants, user fees, or loan programs or the rights and obligations of recipients thereof; or

(4) Raise novel legal or policy issues arising out of legal mandates, the President's priorities, or the principles set forth in the Executive Order.

We have determined that this rule is a ''significant regulatory action'' under the terms of Executive Order 12866. It will have an annual effect on the economy of more than $100 million, but we do not expect it to affect adversely in a material way the economy, a sector of the economy, productivity, competition, jobs, the environment, public health or safety, or State, local, or tribal governments or communities. The rule and its underlying statute are designed to compensate individuals, businesses, not-for-profit organizations, State, local, and tribal governments or communities for injuries as a result of the Cerro Grande fire. Because of the emergency nature of this interim final rule we have not prepared a regulatory analysis of the rule.

The Office of Management and Budget (OMB) has reviewed the interim final rule under Executive Order 12866.

Executive Order 12898, Environmental Justice

Under Executive Order 12898, ''Federal Actions to Address Environmental Justice in Minority Populations and Low-Income Populations,'' 59 FR 7629, February 16, 1994, we have undertaken to incorporate environmental justice into our policies and programs. The Executive Order requires each Federal agency to conduct its programs, policies, and activities that substantially affect human health or the environment, in a manner that ensures that those programs, policies, and activities do not have the effect of excluding persons from participation in, denying persons the benefits of, or subjecting persons to discrimination because of their race, color, or national origin. No action that we can anticipate under the interim final rule will have a disproportionately high and adverse human health and environmental effect on any segment of

the population. In addition, the interim final rule does not impose substantial direct compliance costs on those communities. Accordingly, the requirements of the Executive Order do not apply to this interim final rule.

Executive Order 13084, Consultation and Coordination with Indian Tribal Governments

Under Executive Order 13084, FEMA may not issue a regulation that is not required by statute, that significantly or uniquely affects the communities of Indian tribal governments, and that imposes substantial direct compliance costs on those communities, unless the Federal government provides the funds necessary to pay the direct compliance costs incurred by the tribal governments, or we consult with those governments. If FEMA complies by consulting, Executive Order 13084 requires us to provide to the Office of Management and Budget a description of the extent of our prior consultation with representatives of affected tribal governments, a summary of the nature of their concerns, and a statement supporting the need to issue the regulation. In addition, Executive Order 13084 requires us to develop an effective process permitting elected officials and other representatives of Indian tribal governments ''to provide meaningful and timely input in the development of regulatory policies on matters that significantly or uniquely affect their communities.''

This interim final rule is required by statute and will significantly and uniquely affect two pueblos and individual members of communities of Indian tribal governments through its compensation for damages suffered by the Pueblos and their members, including compensation for lost subsistence from hunting, fishing, firewood gathering, timbering, grazing or agricultural activities conducted on land damaged by the Cerro Grande fire. The rule will not impose substantial direct compliance costs on those communities. Accordingly, the requirements of section 3(b) of Executive Order 13084 do not apply.

Section 104(g) of the Act requires the Director to consult with tribal authorities to ensure the efficient administration of the claims process and to provide for local concerns. On July 27, 2000 representatives of three of the four directly affected counties and one of two affected pueblos, the Santa Clara Pueblo, the chief of staff of the Governor Johnson of New Mexico, and representatives of the New Mexico congressional staff met with FEMA, OMB, and Department of Energy staff to discuss the draft rule and procedures. Representatives of the San Ildefonso Pueblo were invited but were unable to attend.

David L. de Courcy, the designated director of FEMA's Office of Cerro Grande Fire Claims, chaired the meeting. The meeting provided an overview of the claims process for those who suffered losses from the Cerro Grande Fire. Mr. de Courcy stressed his intention to work directly with the Pueblos to address their needs, particularly the impact of the fire on the Pueblos' cultures. Following the meeting Mr. de Courcy met with representatives of the San Ildefonso Pueblo. Mr. de Councy has also met in New Mexico with the Governors of the Santa Clara Pueblo and the San Ildefonso Pueblo.

Executive Order 13132, Federalism

This Executive Order sets forth principles and criteria that agencies must adhere to in formulating and implementing policies that have federalism implications, that is, regulations that have substantial direct effects on the States, or on the distribution of power and responsibilities among the various levels of government. Federal agencies must closely examine the statutory authority supporting any action that would limit the policymaking discretion of the States, and to the extent practicable, must consult with State and local officials before implementing any such action.

We have reviewed this interim final rule under E.O. 13132 and have determined that the rule does not have federalism implications as defined by the Executive Order. The rule establishes the procedures and criteria for claimants, including the State of New Mexico, to apply for Federal compensation for injuries as a result of the Cerro Grande fire. Inasmuch as the benefits will derive from a Federal program exclusively administered by the Federal Government for the benefit of State, local and tribal governments, individuals, and certain not-for-profit organizations, the rule neither limits nor preempts any policymaking discretion of the State that the State might otherwise have.

Nevertheless, under the mandate of the CGFAA we have consulted with State, local and tribal officials while preparing this rule, as outlined above in our discussion of our meeting on July 27, 2000. Mr. de Courcy has also met in New Mexico with representatives of the State of New Mexico, the Pueblo of San Ildefonso and the Pueblo of Santa Clara, the four counties most immediately affected and the Cerro Grande Fire Survivors Association, to obtain input. FEMA also consulted with a number of Federal agencies, including the Department of Energy, the Department of the Interior and the Small Business Administration.

Congressional Review of Agency Rulemaking

We have sent this final rule to the Congress and to the General Accounting Office under the Congressional Review of Agency Rulemaking Act, Public Law 104–121. The rule is a ''major rule'' within the meaning of that Act. It will result in an annual effect on the economy of $100,000,000 or more. However, we do not expect that it will result in a major increase in costs or prices for consumers, individual industries, Federal, State, or local government agencies, or geographic regions. Nor do we expect that it will have ''significant adverse effects'' on competition, employment, investment, productivity, innovation, or on the ability of United States-based enterprises to compete with foreign-based enterprises.

In compliance with section 808(2) of the Congressional Review of Agency Rulemaking Act, 5 U.S.C. 808(2), for good cause we find that notice and public procedure on this interim final rule are impracticable, unnecessary, or contrary to the public interest in light of the urgent requirement to meet the needs of persons injured as a result of the Cerro Grande fire and in order to comply with the mandates of the Cerro Grande Fire Assistance Act. Accordingly, this interim final rule is effective on Monday, August 28, 2000.

List of Subjects in 44 CFR Part 295

Administrative practice and procedure, Aliens, Claims, Disaster assistance, Federally affected areas, Indians, Indians-lands, Indians-tribal government, Organization and functions (Government agencies), Public lands, Reporting and recordkeeping requirements, State and local governments.

Accordingly, the Federal Emergency Management Agency amends 44 CFR Chapter I as follows:

1. By redesignating subchapter E (parts 300—399) as subchapter F.

2. By adding a new Subchapter E, Cerro Grande Fire Assistance.

3. By transferring reserved parts 295 through 299 to new subchapter E.

4. By adding part 295 to subchapter E to read as follows:

SUBCHAPTER E—CERRO GRANDE FIRE ASSISTANCE

PART 295—CERRO GRANDE FIRE ASSISTANCE

Sec.

Subpart A—General

295.1 Purpose.
295.2 Policy.
295.3 Information and assistance.
295.4 Organization of the rule.
295.5 Overview of the claims process.
295.6 Partial payments.

Subpart B—Bringing a Claim under the CGFAA

295.10 Bringing a claim under the CGFAA.
295.11 Deadline for filing notice of loss.
295.12 Election of remedies.
295.13 Subrogation.
295.14 Assignments.

Subpart C—Compensation Available under the CGFAA

295.20 Prerequisite to compensation.
295.21 Allowable compensation.

Subpart D—Claims Evaluation

295.30 Establishing damages.
295.31 Reimbursement of claim expenses.
295.32 Determination of compensation due to claimant.
295.33 Supplementing claims.
295.34 Reopening a claim.
295.35 Access to records.
295.36 Confidentiality of information.

Subpart E—Dispute Resolution

295.40 Scope.
295.41 Administrative appeal.
295.42 Arbitration.
295.43 Judicial review.

Subpart F—Glossary

295.50 Definitions.

Authority: Pub. L. 106–246, 114 Stat. 511, 584; Reorganization Plan No. 3 of 1978, 43 FR 41493, 3 CFR, 1978 Comp., p. 329.

Subpart A—General

§ 295.1 Purpose.

This part implements the Cerro Grande Fire Assistance Act (''CGFAA''), Public Law 106–246, 114 Stat. 584, which requires that the Federal Emergency Management Agency (FEMA) establish a process to evaluate, process and pay claims injuries and property damage resulting from the Cerro Grande Fire.

§ 295.2 Policy.

It is FEMA's policy to provide for the expeditious resolution of meritorious claims through a process that is administered with sensitivity to the burdens placed upon Claimants by the Cerro Grande Fire.

§ 295.3 Information and assistance.

Information and assistance concerning the CGFAA is available from the Office of Cerro Grande Fire Claims (''OCGC''), Federal Emergency Management Agency, P.O. Box 1480, Los Alamos, New Mexico, 87544–1480, or telephone 1–888–748–1853. The Cerro Grande Fire Assistance site on the World Wide Web can be accessed at http://www.fema.gov/cerrogrande. In the interest of brevity, the provisions of the CGFAA are not restated in most instances. A copy of the CGFAA has been placed on the website and will be provided upon request.

§ 295.4 Organization of the rule.

This part contains six subparts. Subpart A provides an overview of the CGFAA process. Subpart B describes the procedures for bringing a claim. Subpart C explains what compensation is available. Subpart D discusses the claims evaluation process. Subpart E explains the dispute resolution process. Subpart F contains a glossary in which various terms used in the rule are defined.

§ 295.5 Overview of the claims process.

(a) The CGFAA is intended to provide persons who suffered losses from the Cerro Grande Fire with a simple, expedited process to seek redress from the United States. In order to obtain benefits under this legislation, a person must submit all Cerro Grande Fire related claims against the United States to FEMA. A person who elects to proceed under the CGFAA is barred from bringing a claim under the Federal Tort Claims Act or filing a civil action against the United States for damages resulting from the Cerro Grande Fire. Judicial review of FEMA's decisions under the CGFAA is available.

(b) The first step in the process is to file a Notice of Loss with OCGC. OCGC will provide the Claimant with a written acknowledgement that the claim has been filed and the claim number.

(c) Shortly thereafter, a Claims Reviewer will contact the Claimant to review the claim and help the Claimant formulate a strategy for obtaining any necessary documentation. After the Claimant has had an opportunity to discuss the claim with the Claims Reviewer, a Proof of Loss will be presented to the Claimant for signature. After any necessary documentation has been obtained and the claim has been fully evaluated, the Claims Reviewer will submit a report to an Authorized Official.

(d) The Authorized Official will review the report and determine whether compensation is due to the Claimant. The Claimant will be notified in writing of the Authorized Official's Determination. If the Claimant is satisfied with the decision, payment will be made after the Claimant returns a completed Release and Certification Form. If the Claimant is dissatisfied with the Authorized Official's Determination an Administrative Appeal may be filed with the Director of OCGC. If the Claimant remains dissatisfied after the appeal is decided, the dispute may be resolved through binding arbitration or heard in the United States District Court for the District of New Mexico.

§ 295.6 Partial payments.

OCGC, on its own initiative, or in response to a request by a Claimant, may make one or more partial payments on the claim. A partial payment can be made if OCGC has a reasonable basis to estimate the Claimant's damages. Acceptance of a partial payment in no way affects a Claimant's ability to pursue an Administrative Appeal of the Authorized Official's Determination or to pursue other rights afforded by the CGFAA.

Subpart B—Bringing a Claim Under the CGFAA

§ 295.10 Bringing a claim under the CGFAA.

(a) Any Injured Person may bring a claim under the CGFAA by filing a Notice of Loss. A claim submitted on any form other than a Notice of Loss will not be accepted.

(b) A single Notice of Loss may be submitted on behalf of a Household containing Injured Persons provided that all Injured Persons on whose behalf the claim is presented are identified.

(c) The Notice of Loss must be signed by each Claimant or by a duly authorized legal representative of each Claimant. If one is signing a Notice of Loss as the legal representative of a Claimant, the signer must disclose his or her relationship to the Claimant. FEMA may require a legal representative to submit evidence of authority.

(d) Notice of Loss forms are available from OCGC by request. They may be obtained through the mail, in person at the OCGC office or by telephone request. The Notice of Loss form can also be downloaded from the Internet at http://www.fema.gov/ cerrogrande.

(e) Notices of Loss may be filed with OCGC by mail to P.O. Box 1480, Los Alamos, NM 87544–1480. OCGC is unable to accept Notices of Loss submitted by facsimile or e-mail.

(f) A Notice of Loss is deemed to be filed on the date it is received by OCGC.

§ 295.11 Deadline for filing Notice of Loss.

The deadline for filing a Notice of Loss is August 28, 2002. The CGFAA

establishes this deadline and does not provide any extensions of the filing deadline.

§ 295.12 Election of remedies.

(a) By filing a Notice of Loss, an Injured Person waives the right to seek redress for Cerro Grande Fire related claims against the United States through the Federal Tort Claims Act or by filing a civil action authorized by any other provision of law.

(b) A person who has filed a Notice of Loss on or before October 1, 2000 may make a one-time election to withdraw the Notice of Loss without prejudice to his or her right to submit a subsequent Notice of Loss or pursue other remedies against the United States for Cerro Grande Fire related losses. The withdrawal must be made by written request, signed by the Claimant, and received by OCGC not later than October 1, 2000.

(c) An Injured Person who files a Federal Tort Claims Act claim or who initiates a civil action against the United States or any officer, employee or agent of the United States relating to the Cerro Grande Fire on or after August 28, 2000 is not eligible under the CGFAA to file a Notice of Loss.

(d) An Injured Person who filed before August 28, 2000 a Federal Tort Claims Act claim or a civil action against the United States for injuries, losses or damages relating to the Cerro Grande Fire may file a Notice of Loss provided that the Federal Tort Claims Act claim is withdrawn or the Injured Person is dismissed as a party to the civil action with prejudice not later than October 27, 2000. The withdrawal of a Federal Tort Claims Act claim must be in the form of a signed, written statement on a form provided by OCGC that is filed with OCGC not later than October 27, 2000. OCGC will promptly forward the original notice of withdrawal to the applicable federal agency and retain a copy in the Claimant's file.

§ 295.13 Subrogation.

An insurer or other third party with the rights of a subrogee, who has compensated an Injured Person for Cerro Grande Fire related losses, may file a Subrogation Notice of Loss under the CGFAA for the subrogated claim. An insurer or other third party with the rights of a subrogee may file a Subrogation Notice of Loss without regard to whether the Injured Party who received payment from the insurer or third party filed a Notice of Loss. By filing a Subrogation Notice of Loss for any subrogated claim, the insurer or third party elects the CGFAA as its exclusive remedy against the United States for all subrogated claims arising out of the Cerro Grande Fire. Subrogation claims must be made on a Subrogation Notice of Loss form furnished by OCGC.

§ 295.14 Assignments.

Assignment of claims and the right to receive compensation for claims under the CGFAA is prohibited and will not be recognized by FEMA.

Subpart C—Compensation Available Under the CGFAA

§ 295.20 Prerequisite to compensation.

In order to receive compensation under the CGFAA a Claimant must be an Injured Person who suffered an Injury as a result of the Cerro Grande Fire and sustained damages.

§ 295.21 Allowable compensation.

(a) *Allowable compensation.* The CGFAA provides for the payment of compensatory damages. Compensatory damages are ''real, substantial and just money damages established by the Claimant in compensation for actual or real injury or loss.'' In general, an Injured Person will be compensated for Injuries to the same extent that the plaintiff in a successful tort action brought against a private party under the laws of the State of New Mexico would be compensated. In addition the CGFAA permits FEMA to compensate Injured Parties for certain categories of ''loss of property,'' ''business loss,'' and ''financial loss,'' which are enumerated in the CGFAA. Damages must be reasonable in amount. Claimants must mitigate their damages, if possible.

(b) *Exclusions.* Except as otherwise provided in the CGFAA, a Claimant will not receive compensation for any injury or damage that is not compensable under the Federal Tort Claims Act and New Mexico law. Punitive damages, interest on claims, attorney's fees, taxes that may be owed by a Claimant as a consequence of receiving an award, and agent's fees under the CGFAA are not recoverable from FEMA.

(c) *Damages arising in the future.* In the event that a lump sum payment is awarded to a Claimant for future damages the amount of the payment shall be discounted to present value.

(d) *Destruction of home.* Compensatory damages for the destruction of a home may include the reasonable cost of reconstructing a home comparable in design, construction materials, size and improvements to the home that was lost taking into account post-fire construction costs in the local area and current building codes and standards. Compensatory damages may also include the cost of removing debris and burned trees, landscaping, stabilizing the land, replacing household contents, and compensation for any decrease in the value of land on which the structure sat pursuant to subparagraph (e) of this section. If requested by a Claimant, a compensatory damage award may also include the reasonable cost of mitigation measures that will reduce the property's vulnerability to the future risk of wildfire, flood or other natural hazards related to the Cerro Grande Fire. The mitigation measures must be approved by the local government with land use regulatory jurisdiction over the property and must also be reviewed by FEMA under applicable environmental and historic preservation laws. A Claimant who receives funds for mitigation measures is required to construct the mitigation measures and will be required to repay to FEMA mitigation funds that are not properly spent.

(e) *Reduction in the value of land.* Compensatory damages may be awarded for reduction in the value of land that a Claimant owned prior to the fire if:

(1) The Claimant sells the land in a good faith arm's length transaction that is closed not later than August 28, 2002 and realizes a loss in the immediate pre-fire value; or

(2) The Claimant can establish that the value of the land was diminished as a result of the Cerro Grande Fire.

(f) *Destruction of unique items of personal property.* Compensatory damages may be awarded for unique items of personal property that were destroyed as a result of the Cerro Grande Fire. If the item can be replaced in the current market, the cost to replace the item will be awarded. If the item cannot be replaced in the current market, its fair market value on the date it was destroyed will be awarded.

(g) *Disaster recovery loans.* FEMA will reimburse Claimants awarded compensation under the CGFAA for interest paid on Small Business Administration disaster loans and similar loans obtained after May 4, 2000. Interest will be reimbursed for the period beginning on the date that the loan was taken out and ending on the date upon which the Claimant receives a compensation award (other than a partial payment). Claimants are required to use the proceeds of their compensation awards to repay Small Business Administration disaster loans. FEMA will cooperate with the Small Business Administration to formulate procedures for assuring that Claimants repay Small Business Administration disaster loans contemporaneously with

the receipt of CGFAA compensation awards.

(h) *Mitigation.* FEMA may compensate Claimants for the cost of reasonable and cost-effective efforts incurred on or before August 28, 2003 to mitigate the heightened risks of wildfire, flood or other natural hazards resulting from the Cerro Grande Fire that are consistent with a FEMA-approved Mitigation Compensation Plan. The Director of FEMA reserves the discretionary authority provided by the CGFAA to determine the reasonableness of each mitigation claim. Mitigation Compensation Plans and requests by Claimants for mitigation funds under this section are subject to review under the National Environmental Policy Act and other applicable environmental and historic preservation laws.

(i) *Subsistence.* (1) *Allowable damages.* FEMA may reimburse an Indian tribe, a Tribal Member or a Household Including Tribal Members for the reasonable cost of replacing Subsistence Resources customarily and traditionally used by the Claimant on or before May 4, 2000, but no longer available to the Claimant as a result of the Cerro Grande Fire. For each category of Subsistence Resources, the Claimant must elect to receive compensatory damages either for the increased cost of obtaining Subsistence Resources from lands not damaged by the Cerro Grande Fire or for the cost of procuring substitute resources in the cash economy. Damage awards will be made in the form of lump sum cash payments to eligible Claimants.

(2) *Proof of subsistence use.* FEMA may consider evidence submitted by Claimants, Indian Tribes and other knowledgeable sources in determining the nature and extent of a Claimant's subsistence uses.

(3) *Duration of damages.* Compensatory damages for subsistence losses will be paid for the period between May 4, 2000 and the date upon which Subsistence Resources can reasonably be expected to return to the level of availability that existed prior to the Cerro Grande Fire. FEMA may rely upon the advice of experts in making this determination.

(j) *Duplication of benefits.* The CGFAA allows FEMA to compensate Injured Parties only if their damages have not been paid or will not be paid by insurance or a third party.

(1) *Insurance.* Claimants who carry insurance will be required to disclose the name of the insurance carrier and the nature of the insurance and provide OCGC with such insurance documentation as OCGC reasonably requests.

(2) *Coordination with FEMA's Public Assistance program.* Injured Parties eligible for disaster assistance under FEMA's Public Assistance Program are expected to apply for all available assistance. Compensation will not be awarded under the CGFAA for:

(i) Emergency costs that are eligible for reimbursement under the Public Assistance Program or

(ii) Losses that are eligible for repair, restoration or replacement under the Public Assistance Program or

(iii) Costs or charges determined excessive under the Public Assistance Program.

(3) *Benefits provided by non-governmental organizations and individuals.* Unless otherwise provided by these regulations, disaster relief payments made to a Claimant by a non-governmental organization or an individual, other than wages paid by the Claimant's employer or insurance payments, will be disregarded in evaluating claims and need not be disclosed to OCGC by Claimants.

(4) *Benefits provided by FEMA's Individual Assistance program.* Compensation under the CGFAA will not be awarded for losses or costs that have been reimbursed under the Individual and Family Grant Program or any other FEMA Individual Assistance Program.

(5) *Worker's compensation claims.* Individuals who have suffered injuries that are compensable under State or Federal worker's compensation laws must apply for all benefits available under such laws.

Subpart D—Claims Evaluation

§ 295.30 Establishing damages.

At a minimum, Claimants will be required to attest to the nature and extent of each Injury for which compensation is sought in the Proof of Loss. The Proof of Loss must be signed under penalty of perjury and subject to the provisions of 18 U.S.C. 1001, which establishes penalties for false statements. Claimants may be required to provide other documentation, which is reasonably available, to corroborate the nature, extent and value of their losses. Claimants may submit for the Administrative Record any documents that they believe are relevant to their claim.

§ 295.31 Reimbursement of claim expenses.

FEMA will reimburse Claimants for the reasonable costs they incur in copying documentation requested by OCGC. FEMA will also reimburse Claimants for the reasonable costs they incur in providing appraisals, or other third-party opinions, requested by OCGC. FEMA will not reimburse Claimant for the cost of appraisals, or other third party opinions, not requested by OCGC.

§ 295.32 Determination of compensation due to claimant.

(a) *Authorized Official's report.* After OCGC has evaluated all elements of a claim as stated in the Proof of Loss, the Authorized Official will issue, and provide the Claimant with a copy of, the Authorized Official's Determination.

(b) *Claimant's options upon issuance of the Authorized Official's determination.* Not later than 120 Days after the date that appears on the Authorized Official's Determination, the Claimant must either accept the findings by submitting a Release and Certification Form to FEMA or initiate an Administrative Appeal in accordance with § 295.41. The CGFAA requires that Claimants sign the Release and Certification Form in order to receive payment on their claims (except for partial payments). The Claimant will receive payment of compensation awarded by the Authorized Official after FEMA receives the completed Release and Certification Form. If the Claimant does not either submit a Release and Certification Form to FEMA or initiate an Administrative Appeal not later than 120 Days after the date that appears on the Authorized Official's Determination, he or she will be conclusively presumed to have accepted the Authorized Official's Determination. The Director of OCGC may modify the deadlines set forth in this subsection at the request of a Claimant for good cause shown.

§ 295.33 Supplementing claims.

A Claimant may amend the Notice of Loss to include additional claims at any time prior to signing a Proof of Loss. A Claimant may submit an additional Notice of Loss to present claims that were not addressed in a Proof of Loss for good cause shown. Any additional claim must be submitted not later than August 28, 2002 except with respect to claims for mitigation costs under § 295.21(h) of these regulations. Supplemental claims for mitigation costs under § 295.21(h) of these regulations cannot be submitted after August 28, 2003.

§ 295.34 Reopening a claim.

The Director of OCGC may reopen a claim in response to a Claimant's request after the Claimant has submitted a Release and Certification Form for the limited purpose of determining whether additional compensation is due if:

(a) The Claimant has incurred mitigation expenses within three years of the date of these regulations for which reimbursement is sought under § 295.21(h); or

(b) The Claimant closed the sale of real property within two years of the date of these regulations and wishes to present a claim for reduction in the value of land under § 295.21(e); or

(c) The Claimant has incurred replacement costs under § 295.21(d) in excess of those previously awarded; or

(d) The Director of OCGC otherwise determines that Claimant has demonstrated good cause.

§ 295.35 Access to records.

For purpose of audit and investigation, a Claimant shall grant the FEMA Office of the Inspector General and the Comptroller General of the United States access to any property that is the subject of a claim and to any and all books, documents, papers, and records maintained by a Claimant or under the Claimant's control pertaining or relevant to the claim.

§ 295.36 Confidentiality of information.

Confidential information submitted by individual Claimants is protected from disclosure to the extent permitted by the Privacy Act. These protections are described in the Privacy Act Notice provided with the Notice of Loss. Other Claimants should consult with FEMA concerning the availability of confidentiality protection under exemptions to the Freedom of Information Act and other applicable laws before submitting confidential, proprietary or trade secret information.

Subpart E—Dispute Resolution

§ 295.40 Scope.

This subpart describes a Claimant's right to bring an Administrative Appeal in response to the Authorized Official's Determination. It also describes the Claimant's right to pursue arbitration or seek judicial review following an Administrative Appeal.

§ 295.41 Administrative appeal.

(a) *Notice of appeal.* A Claimant may request that the Director of OCGC review the Authorized Official's Determination by written request to the Appeals Docket, Office of Cerro Grande Claims, P.O. Box 1480, Los Alamos, NM 87544–1480 postmarked or delivered within 120 Days after the date that appears on the Authorized Official's Determination. The Claimant will submit along with the notice of appeal a statement explaining why the Authorized Official's Determination was incorrect.

(b) *Acknowledgement of appeal.* OCGC shall acknowledge the receipt of appeals that are timely filed. Following the receipt of a timely filed appeal, the Director of OCGC will obtain the Administrative Record from the Authorized Official and transmit a copy to the Claimant.

(c) *Supplemental filings.* The Claimant may supplement the statement of reasons and provide any additional documentary evidence supporting the appeal within 60 Days after the date upon which the appeal is filed. The Director of OCGC may extend these timeframes or authorize additional filings either on his or her own initiative or in response to a request by the Claimant for good cause shown.

(d) *Admissible evidence.* The Claimant may rely upon any relevant evidence to support the appeal, regardless of whether the evidence was previously submitted to the Claims Reviewer for consideration by the Authorized Official.

(e) *Obtaining evidence.* The Director of OCGC may request from the Claimant or from the Authorized Official any additional information that is relevant to the issues posed by the appeal in his or her discretion.

(f) *Conferences.* The Director of OCGC may schedule a conference to gain a better understanding of the issues or to explore settlement possibilities.

(g) *Hearings.* The Director of OCGC may exercise the discretion to convene a hearing to receive oral testimony from witnesses or experts. Hearings will be transcribed and the transcript will be entered in the Administrative Record.

(h) *Decision on appeal.* After the allotted time for submission of evidence has passed, the Director of OCGC shall close the Administrative Record and render a written decision on the Administrative Appeal. The Director of OCGC's decision on the Administrative Appeal shall constitute the final decision of the Director of FEMA under §§ 104(d)(2)(B) and 104(i)(1) of the CGFAA.

(i) *Claimant's options following appeal.* The Claimant's concurrence with the decision in the Administrative Appeal will be conclusively presumed unless the Claimant initiates arbitration in accordance with § 295.42 or seeks judicial review in accordance with § 295.43. In order to receive payment of any compensation awarded by the Administrative Appeal decision the Claimant must submit a Release and Certification Form.

§ 295.42 Arbitration.

(a) *Initiating arbitration.* A Claimant who is dissatisfied with the outcome of the Administrative Appeal may initiate binding arbitration by submitting a written request for arbitration to the Arbitration Administrator for Cerro Grande Claims, Office of Dispute Resolution, Federal Emergency Management Agency, 500 C Street, Southwest, room 214, Washington, DC 20472 on a form provided by OCGC. The written request for arbitration must be received not later than 60 Days after the date that appears on the Administrative Appeal decision.

(b) *Permissible claims.* A Claimant may not arbitrate an issue unless it was raised and decided in the Administrative Appeal. Arbitration will be conducted on the evidence in the Administrative Record. Evidence not previously entered into the Administrative Record will not be considered.

(c) *Settlement and mediation alternatives.* At any time after a request for arbitration is filed and prior to the time a decision is rendered, either party may request in writing that the Office of Dispute Resolution stay further proceedings in the arbitration to facilitate settlement discussions. A mediator may be appointed (if requested by the parties) to facilitate settlement discussions. If both parties concur in the request, the Office of Dispute Resolution will stay the arbitration and appoint a mediator at FEMA's expense. The stay may be terminated and the arbitration resumed upon written request of either party to the Office of Dispute Resolution. If the dispute is settled, the Office of Dispute Resolution shall issue an order terminating the arbitration and provide the Claimant with a Release and Certification Form to obtain payment of any compensation due.

(d) *Selection of arbitrator.* Arbitration shall be decided by one arbitrator selected by the Claimant from a list of qualified arbitrators who have agreed to serve provided by the Office of Dispute Resolution.

(e) *Conduct of arbitration.* The arbitration will be conducted in a manner determined by the arbitrator consistent with guidelines established by the Office of Dispute Resolution. The Office of Dispute Resolution will provide these guidelines upon request.

(f) *Hearings.* The arbitrator may convene a hearing at a location designated by the Office of Dispute Resolution. Whenever possible hearings shall be held in Los Alamos, New Mexico unless the parties jointly agree to a different location.

(g) *Decision.* After reviewing the evidence, the arbitrator shall render a decision in writing to the Claimant, the Director of OCGC and the Office of

Dispute Resolution. The decision will be rendered no later than 10 Days after a hearing is concluded or 60 Days after the arbitration is initiated, whichever is earlier. The Office of Dispute Resolution may extend the time for a decision. The decision shall establish the compensation due to the Claimant, if any, and the reasons therefore.

(h) *Action on arbitration decision.* Upon receipt of the arbitration decision, the Office of Dispute Resolution shall provide the Claimant with a Release and Certification Form to obtain payment of any compensation awarded by the arbitrator.

(i) *Final decision.* The decision of the arbitrator shall be final and binding on all parties and shall not be subject to any administrative or judicial review. The arbitrator may correct clerical, typographical or computational errors as requested by the Office of Dispute Resolution.

(j) *Administration of arbitration.* The Office of Dispute Resolution shall serve as arbitration administrator and shall conclusively resolve any procedural disputes arising in the course of the arbitration. The Office of Dispute Resolution will pay the fees of the arbitrator and reimburse the arbitrator for arbitration related expenses unless the parties jointly agree otherwise.

§ 295.43 Judicial review.

As an alternative to arbitration, a Claimant dissatisfied with the outcome of an Administrative Appeal may seek judicial review of the decision by bringing a civil lawsuit against FEMA in the United States District Court for the District of New Mexico. This lawsuit must be brought within 60 Days of the date that appears on the Administrative Appeal decision. The court may only consider evidence in the Administrative Record. The court will uphold FEMA's decision if it is supported by substantial evidence on the record considered as a whole. Claimants awarded compensation in a final judgment, not subject to further review, must submit a Release and Certification Form to OCGC in order to receive payment.

Subpart F—Glossary

§ 295.50 Definitions

Administrative appeal means an appeal of the Authorized Official's Determination to the Director of OCGC in accordance with the provisions of Subpart E of these regulations.

Administrative record means all information submitted by the Claimant and all information collected by FEMA concerning the claim, which is used to evaluate the claim and to formulate the Authorized Official's Determination. It also means all information that is submitted by the Claimant or FEMA in an Administrative Appeal and the decision of the Administrative Appeal. It excludes the opinions, memoranda and work papers of FEMA's attorneys and drafts of documents prepared by OCGC personnel and contractors.

Authorized Official means an employee of the United States who is delegated with authority by the Director of OCGC to render binding determinations on claims and to determine compensation due to Claimants under the CGFAA.

Authorized Official's Determination means a report signed by an Authorized Official and mailed to the Claimant evaluating each element of the claim as stated in the Proof of Loss and determining the compensation, if any, due to the Claimant.

Claimant means a person who has filed a Notice of Loss under the CGFAA.

Claims Reviewer means an employee of the Untied States or an OCGC contractor or subcontractor who is authorized by the Director of OCGC to review and evaluate claims submitted under the CGFAA.

Days means calendar days, including weekends and holidays.

Household means a group of people, related or unrelated, who live together on a continuous basis and does not include members of an extended family.

Household Including Tribal Members means a Household that existed on May 4, 2000, which included one or more Tribal Members as continuous residents.

Indian tribe means an entity listed on the most recent list of federally recognized tribes published in the **Federal Register** by the Secretary of the Interior pursuant to the Federally Recognized Indian Tribe List Act, 25 U.S.C. 479a, or successor legislation.

Injured Person means an individual, regardless of citizenship or alien status, an Indian tribe, corporation, tribal corporation, partnership, company, association, cooperative, joint venture, limited liability company, estate, trust, county, city, State, school district, special district or other non-Federal entity that suffered Injury resulting from the Cerro Grande Fire and any entity that provided insurance to an Injured Person. The term Injured Person includes an Indian tribe with respect to any claim relating to property or natural resources held in trust for the Indian tribe by the United States. Lenders holding mortgages or security interests on property affected by the Cerro Grande fire and lien holders are not ''Injured Persons'' for purposes of the CGFAA.

Injury means ''injury or loss of property, or personal injury or death,'' as that phrase appears in the Federal Tort Claims Act, 28 U.S.C. 1346(b)(1).

Mitigation Compensation Plan means a written mitigation plan submitted by a local government with land use regulatory authority or by an Indian tribe that recommends specific mitigation measures to reduce the heightened risks of wildfire, flood or other natural hazards resulting from the Cerro Grande Fire or seeks compensation for the cost of such measures expended before August 28, 2000, or both. The Mitigation Compensation Plan may address property specific mitigation measures and community level mitigation measures.

Notice of Loss means a form supplied by OCGC through which an Injured Person makes a binding, conclusive and irrevocable election to have all Injuries resulting from the Cerro Grande Fire reviewed by FEMA for possible compensation under the CGFAA.

Office of Dispute Resolution means the Office established by FEMA to promote use of Alternative Dispute Resolution as a means of resolving disputes. The address of the Office of Dispute Resolution is Federal Emergency Management Agency, 500 C Street, SW., Washington, DC 20472.

Proof of Loss means a statement, signed by a Claimant under penalty of perjury and subject to the provisions of 18 U.S.C. 1001 that the claim is true and correct, attesting to the nature and extent of the Claimant's injuries.

Public Assistance Program means the FEMA program establish under Subchapter IV of the Robert T. Stafford Disaster Relief and Emergency Assistance Act, as amended, 42 U.S.C. 5121, *et seq.*, which provides grants to States, local governments, Indian tribes and private nonprofit organizations for emergency measures and repair, restoration and replacement of damaged facilities.

Release and Certification Form means a document in the manner prescribed by § 104(e) of the CGFAA that a Claimant must complete and return in order to receive payment of compensation awarded pursuant to the CGFAA.

Subsistence Resources means food and other items obtained through hunting, fishing, firewood and other resource gathering, timbering, grazing or agricultural activities undertaken by the Claimant without financial remuneration.

Tribal Member means an enrolled member of an Indian Tribe.

Dated: August 23, 2000.

James L. Witt,

Director.

The Notice of Loss form follows in English and in Spanish:

BILLING CODE 6718–01–U

FEMA
Cerro Grande Fire Assistance Act

OMB No. 3067-0280
Expires 11/30/2000

NOTICE OF LOSS

- By filing this Notice of Loss, you are choosing to seek compensation for losses from the Cerro Grande Fire from the United States through the Cerro Grande Fire Assistance Act (CGFAA), Public Law 106-246, and NOT under the Federal Tort Claims Act or any other means. Your choice to seek reimbursement through this process cannot be changed.
- In order for the Federal Emergency Management Agency (FEMA) to consider your claim under the CGFAA, you must sign the **Verification of Truth of Information** and **Choice of the Cerro Grande Fire Claims Process** statements on page 3 of this Notice of Loss.
- FEMA's regulations describing the claims process will be published in the Federal Register on August 28, 2000.
- You may file your Notice of Loss at any time up until August 28, 2002.
- During the claims process, you will be able to supplement information regarding your losses.
- Mail the completed Notice of Loss to the **FEMA Office of Cerro Grande Fire Claims, P.O. Box 1480, Los Alamos, NM, 87544-1480.**
- For more information, please call 1-888-748-1853.

CLAIMANT INFORMATION

1. **Your Name** (First, Middle Initial, Last): _____

2. **What is your current address and contact information?**

Street: _____

_____

City, State, Zip: _____

Day Phone: _____ Evening Phone: _____

Fax No.: _____

E-mail address: _____

What is the best time to reach you? _____

TYPE OF CLAIM — Please submit a separate **Notice of Loss** for each type of claim.

3. **What type of claim are you filing?** (Check only one option)

- ❑ Individual or Household
- ❑ Business
- ❑ Government
- ❑ Pueblo
- ❑ Not-for-Profit
- ❑ Other _____

4. **Claims for individual or household,** please provide the following information. If you are filing on behalf of another person or persons, please include the following information for each person.

What are the claimant's names (including yourself, if you are a claimant)?	What is this person's relationship to you? (Example: self, spouse, child)	Is the claimant a member of a pueblo? (Yes / No)

If more space is required to identify additional claimants, please attach the information to this Notice of Loss.

5. **Claims for businesses, government agencies, pueblos, not-for-profits or others,** please provide the following information:

What is the claimant's name: _____

What is the claimant's address (if different from contact address provided on page 1)?

Street: _____

City, State, Zip: _____

LOSSES

6. **Describe your losses in general terms.** You will be able to supplement this information during the claims process. Please do not submit documentation at this time. Detailed information on your losses and their dollar value will be requested and collected during the claims process.

Real Estate (examples: home, business facility)

_____

_____

_____

_____

Other Personal Property (examples: automobiles, furniture, electronics, equipment)

_____

_____

_____

_____

_____

Other Losses (examples: personal injury, lost wages, business interruption, public facilities, tribal subsistence)

_____

_____

_____

_____

_____

Additional pages may be attached.

INSURANCE AND OTHER ASSISTANCE

7. **Have you filed an insurance claim for losses related to the Cerro Grande Fire (whether or not the claim has been closed)?** ..... Yes ☐ No ☐

   If yes, please name the insurance company: _____

8. **Did you receive any FEMA Grants** (examples: Temporary Housing or Individual and Family Grants, Public Assistance, Mitigation)? ..... Yes ☐ No ☐

9. **Did you receive a U.S. Small Business Administration Disaster Assistance Loan?** ..... Yes ☐ No ☐

10. **Did you receive any other federal financial assistance related to the Cerro Grande Fire** ..... Yes ☐ No ☐

    If yes, please describe: _____

11. **Will you need a translator or special accommodations during the claims process?** ..... Yes ☐ No ☐

    If yes, please describe: _____

VERIFICATION OF TRUTH OF INFORMATION and CHOICE OF CERRO GRANDE FIRE CLAIMS PROCESS

By filing this form all claimants whose names appear on this form attest that:

1) *My statements on this form, and any attachments to it, are true, complete, and correct to the best of my knowledge and belief and are made in good faith. I understand that a knowing and willful false statement on this form can be punishable by a fine of $10,000 or imprisonment up to 5 years, or both (Section 1001 of Title 18, United States Code).*

2) *I choose to have all of my claims against the United States of America related to the Cerro Grande Fire reviewed, evaluated and compensated by the Federal Emergency Management Agency (FEMA) under the Cerro Grande Fire Assistance Act (CGFAA), Public Law 106-246, and* ***NOT*** *through any other means. By filing this form I am waiving the right to make a claim under the Federal Tort Claims Act or under any other statute, law or authority. My choice to seek reimbursement through this process cannot be changed. I understand that I can appeal FEMA's compensation decision to binding arbitration or to U.S. District Court.*

For an individual or household claim, all claimants named on this Notice of Loss, except minors, must sign. For a business, not-for-profit organization, pueblo, or government claim, an authorized official must sign.

Name (Print)	Signature	Relationship or Title	Date

PRIVACY ACT NOTICE

This Notice is provided in accordance with the Privacy Act, 5 U.S.C. 552a(e)(3), and concerns the information requested in the Notice of Loss form to which this Notice is attached. The authority for the collection of this information is Cerro Grande Fire Assistance Act, Public Law 106-246. The information you provide will be used to verify your identity, to verify your eligibility, and to verify any previous compensation made in connection with the Cerro Grande Fire. Some or all of the information you provide may be released to federal, state, and local government agencies or private organizations for the purpose of confirming your identity, your eligibility and any previous compensation or payments made in connection with the Cerro Grande Fire. The information may also be released when otherwise authorized by statute or regulation. Disclosure of the information by you is required in order for you to make a claim under the Act. It will not be possible to process your claim without the information.

Routine Uses: The Privacy Act permits us to disclose information about individuals without their consent for a routine use, i.e., when the information will be used for a purpose that is compatible with the purpose for which we collected the information. The routine uses of this system are:

a) Disclosure may be made to agency contractors who have been engaged to assist the agency in the performance of a contract service related to this system of records and who need to have access to the records in order to perform the activity. Recipients shall be required to comply with the requirements of the Privacy Act of 1974, as amended, 5 USC 552a.

b) Disclosure may be made to a member of Congress or to a Congressional staff member in response to an inquiry of the Congressional office made at the written request of the constituent about whom the record is maintained.

c) Disclosure may be made to other Federal agencies that FEMA has determined provided Cerro Grande fire-related assistance to claimant in order to ensure that benefits are not duplicated.

d) Disclosure of information submitted by an individual Claimant may be made to an insurance company or other third party which has submitted a subrogation claim relating to such Claimant when it is necessary in FEMA's opinion to ensure that benefits are not duplicated and to efficiently coordinate the processing of claims brought by individuals and subrogees.

e) Disclosure of property loss information may be made to local governments in Los Alamos, Rio Arriba, Sandoval and Santa Fe counties and the Pueblos of San Ildefonso and Santa Clara for the purpose of preparing community wide mitigation plans.

f) When a record on its face, or in conjunction with other records, indicates a violation or potential violation of law, whether civil, criminal or regulatory in nature, and whether arising by general statute or particular program statute, or by regulation, rule, or order issued pursuant thereto, disclosure may be made to the appropriate agency, whether Federal, foreign, State, local, or tribal or other public authority responsible for enforcing, investigating or prosecuting such violation or charged with enforcing or implementing the statute, or rule, regulation, or order issued pursuant thereto, if the information disclosed is relevant to any enforcement, regulatory, investigative or prosecutive responsibility of the receiving entity.

g) Disclosure may be made to the National Archives and Records Administration for the purpose of conducting records management studies under the authority of 44 U.S.C. 2904, and 2906.

Effect of Failure to Respond: Disclosure is voluntary. However, failure to supply the requested information or to execute the form may render your claim "invalid".

NOTICE OF PAPERWORK REPORTING BURDEN DISCLOSURE

Public reporting burden for this form is estimated to average 45 minutes. Burden means the time, effort, and financial resources expended by persons to generate, maintain, retain, disclose, or to provide information to us. You may send comments regarding the burden estimate or any aspects of the form, including suggestions for reducing the burden to: Information Collection Management, Federal Emergency Management Agency 500 C Street SW, Washington, DC 20472. Please do not send your completed notice of loss to this address. You are not required to respond to this collection of information unless a valid OMB control number appears in the upper right corner of this form.

FEMA
Ley de Asistencia por el Fuego de Cerro Grande

OMB No. 3067-0280
Vigente hasta 30/11/2000

NOTIFICACIÓN DE PÉRDIDA

- Al someter esta Notificación de Pérdida, elige solicitar compensación de los Estados Unidos por las pérdidas sufridas durante el Fuego de Cerro Grande por medio de la Ley de Asistencia por el Fuego de Cerro Grande (CGFAA —por sus siglas en inglés), Ley Pública 106-246, y NO por medio de la Ley Federal de Reclamaciones por Daños o algún otro medio. Una vez elige reclamar reembolso a través de este procedimiento no podrá cambiar dicha elección.
- Para que la Agencia Federal para el Manejo de Emergencias considere su reclamación bajo la CGFAA, debe firmar la declaración de **Verificación de Veracidad de Información** y **Elección del Proceso de Reclamaciones por el Fuego De Cerro Grande** en la página 3 de esta Notificación de Pérdida.
- FEMA publicará un reglamento que describirá el proceso de las reclamaciones el 28 de agosto del 2000 en el Federal Register (Registro Federal).
- Puede someter la Notificación de Pérdida en cualquier momento pero no más tarde del 28 de agosto del 2002.
- Durante el proceso de reclamación, podrá complementar la información relacionada con sus pérdidas.
- Envíe la Notificación de Pérdida a **FEMA Office of Cerro Grande Fire Claims, P.O. Box 1480, Los Alamos, NM, 87544-1480.**
- Para más información llame al 1-888-748-1853

INFORMACIÓN DEL RECLAMANTE

1. **Su nombre** (Primer, Segundo o inicial, apellido): _____

2. **Dirección actual e información de contacto:**

Calle: _____

_____

Ciudad, Estado, Zona Postal: _____

Tel. día: _____ Tel. noche: _____

Núm. de Fax: _____

Correo electrónico: _____

¿Cuál es la mejor hora para comunicarse con usted? _____

Tipo de reclamación — Someta una Notificación de Pérdida por separado por cada tipo de reclamación.

3. **¿Qué tipo de reclamación está sometiendo?** (Escoja una opción solamente)

- ❑ Individual o de Hogar
- ❑ Negocio
- ❑ Gubernamental
- ❑ Pueblo
- ❑ Sin fines pecuniarios
- ❑ Otros _____

4. **Reclamaciones para individuos o el hogar,** provea la siguiente información. Si está llenando la solicitud a nombre de otra persona o personas, incluya la siguiente información por cada persona.

¿Cuáles son los nombres de los reclamantes? (incluya el suyo si es reclamante)	¿Cuál es la relación entre usted y esta persona? (Ejemplo: yo, cónyuge, hijo)	¿El reclamante es miembro de un pueblo? (Sí / No)

Si hace falta más espacio para identificar los reclamantes adicionales adjunte la información a esta Notificación de Pérdida.

5. **Reclamaciones para negocios, agencias gubernamentales, pueblos, organizaciones sin fines pecuniarios u otras reclamaciones,** provea la siguiente información:

Nombre del reclamante: _____

Dirección del reclamante (si es distinta a la dirección de contacto provista en la página 1):

Calle: _____

Ciudad, Estado, Zona Postal: _____

PÉRDIDAS

6. **Describa sus pérdidas en términos generales.** Podrá suplementar esta información durante el proceso de reclamación. NO someta documentación en este momento. Se le solicitará información detallada y valor monetario de sus pérdidas durante el proceso de reclamación.

Bienes Raíces (ejemplos: casa, local del negocio)

_____
_____
_____
_____

Otra propiedad personal (ejemplos: automóviles, muebles, equipo electrónico, otros equipos)

_____
_____
_____
_____
_____

Otras pérdidas (ejemplos: lesión, pérdida de salario, interrupción de negocios, instalaciones públicas, asistencia de tribu)

_____
_____
_____
_____

Se puede añadir páginas adicionales.

SEGUROS Y OTRAS ASISTENCIAS

7. ¿Ha sometido alguna reclamación de seguro por pérdidas relacionadas con el Fuego de Cerro Grande? (esté o no cerrado el caso) ..... **Sí** ☐ **No** ☐

Si contestó que sí, escriba el nombre de la compañía aseguradora: _____

8. ¿Recibió algún subsidio de FEMA (por ejemplo: Vivienda temporal o Subvención Individual o de Familia, Asistencia Pública, Mitigación)? ..... **Sí** ☐ **No** ☐

9. ¿Recibió algún préstamo de Asistencia por Desastre de la Administración de Pequeños Negocios? ..... **Sí** ☐ **No** ☐

10. ¿Recibió alguna otra asistencia financiera del Gobierno Federal relacionada con el Fuego de Cerro Grande? ..... **Sí** ☐ **No** ☐

Si contestó que sí, describa el tipo de asistencia: _____

11. ¿Necesitará usted un intérprete u otros arreglos especiales durante el proceso de reclamación? ..... **Sí** ☐ **No** ☐

Si contestó que sí, describa los servicios que necesita: _____

VERIFICACIÓN DE VERACIDAD DE INFORMACIÓN y ELECCIÓN DEL PROCESO DE RECLAMACIONES POR EL FUEGO DE CERRO GRANDE

Al someter este formulario, todos los reclamantes cuyo nombre aparece en el mismo certifican lo siguiente:

1) *Las declaraciones hechas en este formulario y sus anejos son mías, ciertas, están completas y correctas a mi mejor capacidad y entendimiento y hechas de buena fe. Entiendo que cualquier declaración falsa hecha con conocimiento y voluntad es castigable con una multa de $10,000 o hasta 5 años de encarcelación, o ambas (Sección 1001 del Título 18, del Código de los Estados Unidos).*
2) *Elijo que todas mis reclamaciones contra los Estados Unidos de América relacionadas con el Fuego de Cerro Grande sean revisadas, evaluadas y compensadas por la Agencia Federal para el Manejo de Emergencias (FEMA —por sus siglas en inglés) según la Ley de Asistencia por el Fuego de Cerro Grande (CGFAA), Ley Pública 106-246, y* ***NO*** *a través de ningún otro medio. Al presentar este formulario renuncio al derecho de hacer una reclamación bajo la Ley Federal de Reclamación de Daños o bajo cualquier otro estatuto, ley, o autoridad. Mi elección de solicitar reembolso a través de este proceso no podrá cambiarse. Entiendo que puedo apelar la decisión de compensación de FEMA a un arbitraje vinculante o a un tribunal de distrito de los Estados Unidos.*

Para una reclamación individual o de hogar, todos los reclamantes, con excepción de los menores de edad, tienen que firmar. Para una reclamación de un negocio, una organización sin fines pecuniarios, un pueblo, o una agencia gubernamental la firma debe ser de un funcionario autorizado.

Nombre (letra de imprenta)	Firma	Relación o Título	Fecha

Notificación sobre la Ley de Privacidad

Esta Notificación se provee conforme a la Ley de Privacidad, Título 5 del Código de los Estados Unidos § 552a(e)(3), y alude la información requerida en la Notificación de Pérdida que precede. La autoridad para la recopilación de esta información es la Ley de Asistencia por el Fuego de Cerro Grande, Ley Pública 106-246. La información que usted provea se utilizará para verificar su identidad, verificar su elegibilidad y verificar cualquier compensación previa hecha en conexión con el Fuego de Cerro Grande. Parte o toda la información que usted provea podrá ser divulgada a agencias gubernamentales federales, estatales o locales o a organizaciones privadas con el propósito de verificar su identidad, su elegibilidad y cualquier compensación o pagos hechos en relación con el Fuego de Cerro Grande. La información también podrá divulgarse cuando cualquier otro estatuto o reglamento lo autorice. Se requiere que usted divulgue la información para hacer la reclamación conforme a la Ley. No será posible procesar su reclamación sin la información.

Usos Rutinarios: La Ley de Privacidad nos permite divulgar la información sobre individuos sin su consentimiento para usos rutinarios, como por ejemplo: cuando la información será utilizada para un propósito compatible para el cual fue recopilada. Los usos rutinarios de este sistema son:

a) Divulgación a contratistas de la agencia que han asistido a la misma, en la ejecución de un contrato de servicio relacionado con este sistema de expedientes y que necesitan tener acceso a los expedientes para ejercer su función. Se le requerirá a los recipientes cumplir con los requisitos de la Ley de Privacidad de 1974 según enmendada, Título 5 del Código de los Estados Unidos § 552a.

b) Divulgación a un miembro del Congreso o a un miembro del personal del Congreso en respuesta a una investigación de la Oficina del Congreso solicitada por escrito por el constituyente sobre el cual se mantiene el expediente.

c) Divulgación a otras agencias federales que FEMA determine que hayan provisto asistencia al reclamante relacionada con el Fuego de Cerro Grande, para asegurar que no se dupliquen.

d) Divulgación a una compañía de seguros u otros terceros que hayan sometido una reclamación de subrogación con relación al Reclamante cuando sea necesario conforme al criterio de FEMA para asegurar que los beneficios no sean duplicados y para coordinar eficientemente el proceso de reclamaciones presentadas por individuos y subrogados.

e) Divulgación de información de pérdida de propiedad a los gobiernos locales de los condados de Los Álamos, Río Arriba, Sandoval y Santa Fe y los Pueblos de San Ildelfonso y Santa Clara para el propósito de preparar planes de mitigación para toda la comunidad.

f) Cuando un expediente a simple vista, o en conjunción con otros expedientes, indique una violación o un potencial de violación de ley, sea esta de naturaleza civil, criminal o de reglamento o surgiera de un estatuto general o de un estatuto de un programa en particular, reglamento u orden emitida que así lo indique, se podrá divulgar la información a la agencia apropiada, sea esta federal, extranjera, estatal, local o tribal u otra autoridad pública responsable de hacer cumplir, investigar o procesar dicha violación o encargada de la implementación del estatuto, regla o reglamento u orden emitida según indique, si la información a revelarse es pertinente a la responsabilidad de cumplimiento, reglamentaria o procesal de la entidad receptora.

g) Divulgación a la Administración Nacional de Archivos y Expedientes para el propósito de llevar a cabo estudios de manejo de expedientes bajo la autorización de el Título 44 del Código de los Estados Unidos §2904 y 2906.

El efecto de negarse a proveer la información: La divulgación es voluntaria. Sin embargo, negarse a proveer la información requerida podría convertir su reclamación en una "inválida".

NOTIFICACIÓN DE DIVULGACIÓN DE LA CARGA DE INFORMAR POR ESCRITO

La carga pública de información para este formulario está estimada en un promedio de 45 minutos. Carga significa el tiempo, el esfuerzo y los recursos financieros utilizados para que las personas generen, mantengan, retengan, divulguen o nos provean información. Puede enviar comentarios sobre el estimado de la carga o cualquier punto relacionado con este formulario, incluyendo sugerencias para reducir dicha carga a: Information Collection Management, Federal Emergency Management Agency, 500 C Street SW, Washington, DC 20472. Por favor, no envíe su notificación de pérdida completada a esta dirección. No es requisito contestar a esta recopilación de información a no ser que un número de control válido de la OMB aparezca en la esquina superior derecha de este formulario.

[FR Doc. 00–21926 Filed 8–25–00; 8:45 am]
BILLING CODE 6718–01–C

Federal Register

Monday,
August 28, 2000

Part VI

Department of Agriculture

Cooperative State Research, Education, and Extension Service

Forestry Research Advisory Council Meeting; Notice

DEPARTMENT OF AGRICULTURE

Cooperative State Research, Education, and Extension Service

Forestry Research Advisory Council Meeting; Office of the Under Secretary, Research, Education, and Economics

ACTION: Announcement of meeting.

SUMMARY: In accordance with the Federal Advisory Committee Act, 5 U.S.C. App. 2, the United States Department of Agriculture announces a meeting of the Forestry Research Advisory Council.

SUPPLEMENTARY INFORMATION: Section 1441(C) of the Agriculture and Food Act of 1981 requires the establishment of the Forestry Research Advisory Council (FRAC) to provide advice to the Secretary of Agriculture on accomplishing efficiently the purposes of the Act of October 10, 1962 (16 U.S.C. 582a, *et seq.*) known as the McIntire-Stennis Act of 1962. The Council also provides advice related to the U.S. Forest Service research program, authorized by the Forest and Rangeland Renewable Resources Research Act of 1978 (P.L. No. 95–307, 92 Stat. 353, as amended; 16 U.S.C. 1641 *et seq.* The Council which has two vacancies is composed of 18 voting members from: Federal and State agencies, forest industries, forestry schools and State agricultural experiment stations, and volunteer public groups.

DATE AND LOCATION: The Council will meet on September 11, 2000, from 8:30 a.m. to 4:00 p.m., and on September 12, 2000, from 8:30 a.m. to 12:00 noon in the Plant and Animal Systems conference room (Rm. 3302) of the Waterfront Centre located at 800 9th Street, SW., Washington, DC 20024. The meeting is open to the public. The purposes of the meeting are: a) to hear reports from the Forest Service, the Cooperative State Research, Education, and Extension Service (CSREES), forest Industries, and the National Association of Professional Forestry Schools and Colleges; and b) to formulate advice on Federal and State forestry research for the Secretary of Agriculture. A complete agenda will be available immediately prior to the meeting, and to obtain a copy beforehand, contact the FRAC Coordinator.

COMMENTS: Written comments, limited to five pages in 12-point pitch, will be accepted and can be submitted at the time of the session or sent to the FRAC Coordinator. Those wanting to make oral comments should preregister on or before the session date by contacting the FRAC Coordinator. All statements will become a part of the official records of the FRAC and will be kept on file for public review in the FRAC Coordinator's office (Rm. 3413, Waterfront Center, 800 9th Street, SW., Washington, DC 20024).

FOR FURTHER INFORMATION CONTACT: Dr. Catalino A. Blanche, FRAC Coordinator, Cooperative State Research, Education, and Extension Service; U.S. Department of Agriculture; STOP 2210; 1400 Independence Avenue, SW., Washington, DC 20250–2210; Telephone, (202) 401–4190; fax number (202) 401-1706; e-mail address, cblanche@reeusda.gov.

Done at Washington, DC, this 23rd day of August 2000.

Eileen Kennedy,

Deputy Under Secretary, Research, Education, and Economics.

[FR Doc. 00–21935 Filed 8–23–00; 5:00 pm]

BILLING CODE 3410–22–P

Federal Register

Monday,
August 28, 2000

Part VII

Department of Defense
General Services Administration
National Aeronautics and Space Administration

48 CFR Part 2, et al.

Federal Acquisition Regulation; Acquisition of Commercial Items; Proposed Rule

DEPARTMENT OF DEFENSE

GENERAL SERVICES ADMINISTRATION

NATIONAL AERONAUTICS AND SPACE ADMINISTRATION

48 CFR Parts 2, 12, 46, 52

[FAR Case 2000–303]

RIN 9000–AI88

Federal Acquisition Regulation; Acquisition of Commercial Items

AGENCIES: Department of Defense (DoD), General Services Administration (GSA), and National Aeronautics and Space Administration (NASA).

ACTION: Proposed rule.

SUMMARY: Federal Acquisition Regulatory Council (FARC) is proposing to amend the Federal Acquisition Regulation (FAR) to implement two statutory changes relevant to the definition of ''Commercial Items'': Section 803(a)(2)(D) of the Strom Thurmond National Defense Authorization Act for Fiscal Year 1999 to revise the definition of ''commercial item'' to provide specific guidance on the meaning and appropriate application of the term ''purposes other than government purposes'' at 41 U.S.C. 403(12)(A); and Section 805 of the National Defense Authorization Act for Fiscal Year 2000 to clarify the definition of ''commercial item'' with respect to associated services.

In addition, the FAR Council is proposing other changes related to the acquisition of commercial items, including conforming the coverage regarding contractor liability for property loss or damage to commercial practice.

This proposed rule revises and supersedes the proposed rule FAR case 98–304, Commercial Items—Nongovernmental Purposes, published in the **Federal Register** at 64 FR 40694, July 27, 1999. As a result, proposed rule 98–304 is hereby withdrawn.

DATES: Interested parties should submit comments in writing on or before October 27, 2000, to be considered in the formulation of a final rule.

ADDRESSES: Submit written comments to: General Services Administration, FAR Secretariat (MVRS), 1800 F Street, NW, Room 4035, ATTN: Laurie Duarte, Washington, DC 20405.

Submit electronic comments via the Internet to: farcase.2000–303@gsa.gov.

Please submit comments only and cite FAR case 2000–303 in all correspondence related to this case.

FOR FURTHER INFORMATION CONTACT: The FAR Secretariat, Room 4035, GS Building, Washington, DC, 20405, at (202) 501–4755 for information pertaining to status or publication schedules. For clarification of content, contact Ms. Victoria Moss, Procurement Analyst, at (202) 501–4764. Please cite FAR case 2000–303.

SUPPLEMENTARY INFORMATION:

A. Background

Federal Acquisition Regulation Part 12, Acquisition of Commercial Items, was developed to implement Title VIII of the Federal Acquisition Streamlining Act of 1994 (FASA) (Pub. L. 103–355). The regulations became effective on October 1, 1995. The FAR Council has identified several areas that need updating and clarification. This rule addresses a number of those changes.

This proposed rule amends the definition of ''commercial item'' at FAR 2.101 and the definition in the clause at FAR 52.202–1 to implement Section 803(a)(2)(D) of the Strom Thurmond National Defense Authorization Act for Fiscal Year 1999 (Pub. L. 105–261) and Section 805 of the National Defense Authorization Act for Fiscal Year 2000.

Paragraph (a) of the ''commercial item'' definition at FAR 2.101 is revised to implement Section 803(a)(2)(D) of the Strom Thurmond National Defense Authorization Act for Fiscal Year 1999 (Pub. L. 105–261). Section 803(a)(2)(D) requires that the FAR be revised to provide specific guidance on the meaning and appropriate application of the term ''purposes other than Government purposes'' in the definition of ''commercial item'' at 41 U.S.C. 403(12)(A). This proposed language revises and supercedes a proposed rule, published in the **Federal Register** at 64 FR 40694, July 27, 1999, under FAR case 98–304, that was issued to implement Section 803(a)(2)(D). Eight public comments were received in response to the July 27, 1999, proposed rule. A majority of the public comments were substantive and had a common theme. In general, the public believed that the proposed rule exceeded the scope of the statute, introduced ambiguous terms, created new criteria, and narrowed the definition of a commercial item. This proposed rule addresses those concerns by incorporating language from FASA into the definition.

Paragraph (e) of the commercial item definition at FAR 2.101 has been revised to implement Section 805 of the National Defense Authorization Act for Fiscal Year 2000 (Pub. L. 106–65), (Clarification of Definition of Commercial Items with Respect to Associated Services). Section 805 clarifies that services ancillary to a commercial item, such as installation, maintenance, repair, training, and other support services, are considered a commercial service, regardless of whether the service is provided by the same vendor or at the same time as the item, if the service is provided contemporaneously to the general public under similar terms and conditions. The FAR clause at 52.202–1, Definitions, is similarly revised to make the new definition available to contractors and subcontractors.

Paragraph (f) of the ''commercial item'' definition at FAR 2.101 is revised to add definitions of ''Catalog Price'' and ''Market Price'' to this rule to provide guidance for identifying services that may be acquired under FAR Part 12.

Guidance is added at FAR 12.209 to help make contracting officers aware of customary commercial terms and conditions related to the determination of price reasonableness when pricing commercial items. Additionally, the rule proposes to amend language in Part 46 to reconcile it with the coverage regarding contractor liability for property loss or damage with paragraph (p) in the clause at 52.212–4, and to amend the clause at 52.212–4(p) to conform to commercial practice (*i.e.,* deleting the phrase ''or implied'' permits industry to take advantage of the latitude provided by the Uniform Commercial Code which allows sellers to exclude the application of an implied warranty through the terms of an express warranty).

This is not a significant regulatory action and, therefore, was not subject to review under Section 6(b) of Executive Order 12866, Regulatory Planning and Review, dated September 30, 1993. This rule is not a major rule under 5 U.S.C. 804.

B. Regulatory Flexibility Act

The FAR Council does not expect this proposed rule to have a significant economic impact on a substantial number of small entities within the meaning of the Regulatory Flexibility Act, 5 U.S.C. 601, *et seq.*, because changes made by the rule will primarily affect large businesses that are more likely than small businesses to have separate workforces for Federal contracts and to be ultimately liable for consequential damages. It clarifies the definition of commercial item to more closely parallel the statutory language and provide guidance for identifying services that may be acquired under FAR Part 12. The rule further conforms language regarding contractor liability to

commercial practice. An Initial Regulatory Flexibility Analysis has, therefore, not been performed. We invite comments from small businesses and other interested parties. The Councils will consider comments from small entities concerning the affected FAR parts 2, 12, 46, and 52 in accordance with 5 U.S.C. 610. Interested parties must submit such comments separately and should cite 5 U.S.C. 601, *et seq.* (FAR case 2000–303), in correspondence.

C. Paperwork Reduction Act

The Paperwork Reduction Act does not apply because the proposed changes to the FAR do not impose information collection requirements that require the approval of the Office of Management and Budget under 44 U.S.C. 3501, *et seq.*

List of Subjects in 48 CFR Parts 2, 12, 46, and 52

Government procurement.

Jeremy F. Olson,

Acting Director, Federal Acquisition Policy Division.

Therefore, DoD, GSA, and NASA propose that 48 CFR parts 2, 12, 46, and 52 be amended as set forth below:

1. The authority citation for 48 CFR parts, 2, 12, 46, and 52 continues to read as follows:

Authority: 40 U.S.C. 486(c); 10 U.S.C. chapter 137; and 42 U.S.C. 2473(c).

PART 2—DEFINITIONS OF WORDS AND TERMS

2. In section 2.101, amend the definition ''Commercial item'' by revising paragraphs (a), (e), and (f) to read as follows:

2.101 Definitions.

* * * * *

Commercial item means—

(a) Any item, other than real property, that is of a type customarily used by the general public or by non-governmental entities for purposes other than governmental purposes, and that—

(1) Has been sold, leased, or licensed to the general public; or

(2) Has been offered for sale, lease, or license to the general public;

Purposes other than governmental purposes are those that are not unique to a government.

* * * * *

(e) Installation services, maintenance services, repair services, training services, and other services if—

(1) Such services are procured for support of an item referred to in paragraphs (a), (b), (c), or (d) of this definition, regardless of whether such services are provided by the same source or at the same time as the item; and

(2) The source of such services provides similar services contemporaneously to the general public under terms and conditions similar to those offered to the Federal Government;

(f) Services of a type offered and sold competitively in substantial quantities in the commercial marketplace based on established catalog or market prices for specific tasks performed under standard commercial terms and conditions.

This does not include services that are sold based on hourly rates without a catalog or market price for a specific service performed. For purposes of these services—

(1) *Catalog Price* means a price included in a catalog, price list, schedule, or other form that is regularly maintained by the manufacturer or vendor, is either published or otherwise available for inspection by customers, and states prices at which sales are currently, or were last, made to a significant number of buyers constituting the general public; and

(2) *Market Prices* mean current prices that are established in the course of ordinary trade between buyers and sellers free to bargain and that can be substantiated through competition or from sources independent of the offerors.

* * * * *

PART 12—ACQUISITION OF COMMERCIAL ITEMS

3. Revise section 12.209 to read as follows:

12.209 Determination of price reasonableness.

While the contracting officer must establish price reasonableness in accordance with 13.106–3, 14.408–2, or subpart 15.4, as applicable, when contracting by negotiation, the contracting officer should be aware of customary commercial terms and conditions when pricing commercial items. Commercial item prices are affected by factors that include, but are not limited to, speed of delivery, length and extent of warranty, limitations of seller's liability, quantities ordered, length of the performance period, and specific performance requirements. The contracting officer must ensure that contract terms, conditions and prices are commensurate with the Government's need.

PART 46—QUALITY ASSURANCE

4. In section 46.801, revise the last sentence of paragraph (a) to read as follows:

46.801 Applicability.

(a) * * * This subpart does not apply to commercial items.

* * * * *

46.804 [Reserved]

5. Remove and reserve section 46.804.

PART 52—SOLICITATION PROVISIONS AND CONTRACT CLAUSES

6. In section 52.202–1, revise the date of the clause and paragraphs (c)(1), (c)(5), and (c)(6) to read as follows:

52.202–1 Definitions.

* * * * *

Definitions (Date)

* * * * *

(c) *Commercial item* means—

(1) Any item, other than real property, that is of a type customarily used by the general public or by non-governmental entities for purposes other than governmental purposes, and that—

(i) Has been sold, leased, or licensed to the general public; or

(ii) Has been offered for sale, lease, or license to the general public:

Purposes other than governmental purposes are those that are not unique to a government.

* * * * *

(5) Installation services, maintenance services, repair services, training services, and other services if—

(i) Such services are procured for support of an item referred to in paragraphs (c)(1), (2), (3), or (4) of this definition, regardless of whether such services are provided by the same source or at the same time as the item; and

(ii) The source of such services provides similar services contemporaneously to the general public under terms and conditions similar to those offered to the Federal Government;

(6) Services of a type offered and sold competitively in substantial quantities in the commercial marketplace based on established catalog or market prices for specific tasks performed under standard commercial terms and conditions. This does not include services that we sold based on hourly rates without a catalog or market price for a specific service performed. For purposes of these services—

(i) *Catalog Price* means a price included in a catalog, price list, schedule, or other form that is regularly maintained by the manufacturer or vendor, is either published or otherwise available for inspection by customers, and states prices at which sales are currently, or were last, made to a significant number of buyers constituting the general public.

(ii) *Market Prices* mean current prices that are established in the course of ordinary trade between buyers and sellers free to bargain and that can be substantiated through competition or from sources independent of the offerors.

* * * * *

52.212–4 [Amended]

7. In section 52.212–4, revise the date of the clause and remove ''or implied'' in paragraph (p).

[FR Doc. 00–21855 Filed 8–25–00; 8:45 am]

BILLING CODE 6820–EP–U

Reader Aids

Federal Register

Vol. 65, No. 167

Monday, August 28, 2000

CUSTOMER SERVICE AND INFORMATION

Federal Register/Code of Federal Regulations

General Information, indexes and other finding aids	**202–523–5227**
Laws	**523–5227**
Presidential Documents	
Executive orders and proclamations	**523–5227**
The United States Government Manual	**523–5227**
Other Services	
Electronic and on-line services (voice)	**523–4534**
Privacy Act Compilation	**523–3187**
Public Laws Update Service (numbers, dates, etc.)	**523–6641**
TTY for the deaf-and-hard-of-hearing	**523–5229**

ELECTRONIC RESEARCH

World Wide Web

Full text of the daily Federal Register, CFR and other publications:

http://www.access.gpo.gov/nara

Federal Register information and research tools, including Public Inspection List, indexes, and links to GPO Access:

http://www.nara.gov/fedreg

E-mail

PENS (Public Law Electronic Notification Service) is an E-mail service for notification of recently enacted Public Laws. To subscribe, send E-mail to

listserv@www.gsa.gov

with the text message:

subscribe PUBLAWS-L your name

Use listserv@www.gsa.gov only to subscribe or unsubscribe to PENS. We cannot respond to specific inquiries.

Reference questions. Send questions and comments about the Federal Register system to:

info@fedreg.nara.gov

The Federal Register staff cannot interpret specific documents or regulations.

FEDERAL REGISTER PAGES AND DATE, AUGUST

46859–47242 1
47243–47652 2
47653–47824 3
47825–48134 4
48135–48346 7
48347–48600 8
48601–48884 9
48885–49188 10
49189–49468 11
49469–49718 14
49719–49894 15
49895–50126 16
50127–50400 17
50401–50594 18
50595–50906 21
50907–51212 22
51213–51514 23
51515–51746 24
51747–51996 25
51997–52286 28

CFR PARTS AFFECTED DURING AUGUST

At the end of each month, the Office of the Federal Register publishes separately a List of CFR Sections Affected (LSA), which lists parts and sections affected by documents published since the revision date of each title.

3 CFR

Proclamations:
7332 47825
Executive Orders:
12722 (See Notice of July 28, 2000) 47241
12724 (See Notice of July 28, 2000) 47241
12924 (See Notice of August 3, 2000) 48347
13165 49469
13166 50121
Administrative Orders:
Notices:
July 28, 2000 47241
August 3, 2000 48347
Presidential Determinations:
No. 00-27 of July 21, 2000 47827

5 CFR

330 47829
532 50127
550 48135
595 48135
610 48135
1201 48885
1203 48885
1204 48885
1205 48886
1206 48886
1207 48886
1208 49895
2640 47830
Proposed Rules:
531 49948
532 .....48641, 50165
1800 49949

7 CFR

2 49471
97 47243
225 50127
246 51213
253 47831
272 49719
274 49719
301 .....50595, 51515, 51516, 51517
353 50128
371 49471
457 47834
905 50907
920 49472
927 48136
929 48349
930 48139
945 48142
982 47245
1240 48318
1479 47840
1710 51747
1717 51747
1718 51747
1755 51749
1951 .....50401, 50598
3015 49474
3016 49474
3019 49474
Proposed Rules:
46 48185
47 48185
205 48642
300 50655
305 47908
319 .....47908, 50655, 50938
905 46879
1216 50666
1240 48324
1755 51773
1940 47695

8 CFR

Proposed Rules:
103 50166
212 46882
214 50166
236 46882
241 46882
248 50166
264 50166

9 CFR

78 47653
93 46859
94 .....50603, 51518, 51997
130 51997
Proposed Rules:
1 .....47908, 50607
2 .....47908, 50607
79 49770

10 CFR

Ch.1 47654
72 50606
Proposed Rules:
2 50937
30 49207
40 52049
61 49207
431 .....48828, 48838, 48852

12 CFR

220 51519
360 49189
1805 49642
Proposed Rules:
14 50882
208 50882
225 47696
343 50882
536 50882

13 CFR

120 49481

121 .....48601, 49726, 50744
400.....51521
500.....51522
Proposed Rules:
107.....49511

14 CFR

11.....47247, 50850
21.....47247
25.....47247, 47841
33.....48887
39 .....46862, 47248, 47252, 47255, 47660, 48144, 48351, 48353, 48355, 48358, 48360, 48362, 48364, 48368, 48371, 48373, 48605, 48607, 49481, 49727, 49728, 49730, 49732, 49734, 49735, 49897, 49899, 49901, 49903, 49905, 50131, 50617, 50619, 50621, 50623, 50627, 50628, 50630, 50632, 50909, 51229, 51750, 51752, 51754, 52010, 52012
71 .....47258, 47259, 47260, 47261, 47843, 48146, 48147, 48608, 48609, 48888, 49192, 50281, 50405, 50635, 50636, 51229, 51522, 51523, 51757, 52015
73.....49483, 50133
91.....50744
97 .....48889, 48891, 48893, 51524, 51525, 51528
121.....50744, 51742
125.....50744, 51742
1204.....47663
Proposed Rules:
23.....49513
39 .....47356, 47701, 48399, 48401, 48402, 48404, 48643, 48645, 48646, 48648, 48931, 48933, 48936, 48937, 48941, 48943, 48945, 48947, 48950, 49523, 49775, 49952, 50166, 50466, 50468, 50667, 51254, 51256, 51259, 51260, 51560, 51562, 51775, 52049
71 .....48651, 50470, 50744, 51263
91.....51512
121.....50945
135.....51512
139.....50669, 50945
217.....50946
241.....50946
298.....50946

15 CFR

287.....48894
Proposed Rules:
922.....41264

16 CFR

2.....50632
423.....47261, 48148

17 CFR

1.....47843, 51529
4.....47848
30.....47275
210.....51692
211.....51692
228.....51692
230.....47281
231.....47281
240.....51692, 51716
243.....51716
249.....51692, 51716
271.....47281
Proposed Rules:
1.....49208, 52051
3.....49208
4.....49208
5.....49208
15.....49208
20.....49208
35.....49208
36.....49208
37.....49208
38.....49208
39.....49208
100.....49208
140.....49208
155.....49208
166.....49208
170.....49208
180.....49208
210.....49954
240 .....47900, 48406, 49954

18 CFR

101.....47664
125.....48148, 50638
154.....47284
161.....47284
225.....48148, 50638
250.....47284
284.....47284
330.....47294
356.....48148
385.....47294
Proposed Rules:
342.....47355
352.....50376
357.....50376
385.....50376

20 CFR

404.....50746
416.....50746
652.....49294
655.....51138
660.....49294
661.....49294
662.....49294
663.....49294
664.....49294
665.....49294
666.....49294
667.....49294
668.....49294
669.....49294
670.....49294
671.....49294
Proposed Rules:
416.....49208
440.....49208
655.....50170
656.....51777

21 CFR

71.....51758
73.....48375
170.....51758
171.....51758
172.....48377
201.....46864, 48902
310.....48902
341.....46864
344.....48902
514.....47668
524.....50912
556.....50913
558 .....50133, 50913, 50914
640.....52016
811.....51532
868.....47669
876.....48609
884.....47305
1240.....49906
1304.....49483
1308.....47306
1310.....47309, 48546
Proposed Rules:
341.....51780
514.....51782
890.....50949

23 CFR

1335.....48905
1270.....51532
Proposed Rules:
658.....50471

24 CFR

30.....50592
903.....49484
2003.....50904
Proposed Rules:
5.....50842
92.....50842
200.....50842
236.....50842
574.....50842
582.....50842
583.....50842
891.....50842
982.....50842

25 CFR

Proposed Rules:
0.....47859
142.....47704

26 CFR

1 .....48379, 49909, 50281, 50405, 50638
25.....52163
31.....50405
301.....49909, 50405
Proposed Rules:
1 .....48185, 48198, 49955
301.....49955

27 CFR

6.....52018
8.....52018
10.....52018
11.....52018
Proposed Rules:
9.....48953
178.....52054

28 CFR

1.....48379
91.....48392

29 CFR

4022.....49737
4044.....49737

30 CFR

250.....49485
948.....50409
Proposed Rules:
70.....49215
72.....49215
75.....49215
90.....49215
206.....49957
920.....49524

32 CFR

199.....48911, 49491
310.....48169
701.....48170
1615.....47670
1698.....47670
Proposed Rules:
317.....48202

33 CFR

100 .....47316, 48612, 48613, 49493, 49914
117 .....46868, 46870, 50135, 51538, 52021, 52022
165 .....47318, 47321, 48381, 48383, 48614, 48616, 49495, 49497, 49915, 50917, 51539, 51540
Proposed Rules:
26.....50479
84.....47936
117 .....50480, 51787, 52057
151.....48548
155.....48548
157.....48548
158.....48548
160.....50481
161.....50479
165.....50479
183.....47936
323.....50108

34 CFR

600.....49134
668.....47590, 49134
674.....47634
675.....49134
682 .....47590, 47634, 49124, 49134
685 .....47590, 47634, 49124, 49134
690.....47590, 49134

36 CFR

242.....51542
Proposed Rules:
242.....51648
293.....48205
1250.....51270
1254.....51270

37 CFR

1.....49193, 50092
201.....46873, 48913
202.....48913
204.....48913

38 CFR

21.....51763
Proposed Rules:
4.....48205
36.....46882

39 CFR

20 .....47322, 48171, 52023
111 .....48385, 50054, 49917
Proposed Rules:
111.....47362

40 CFR

Ch. I 47323

Ch. IV....48108
9....48286, 50136
35....48286
49....51412
52....46873, 47326, 47336, 47339, 47862, 49499, 49501, 50651, 52028
60....48914
62....49868
63....47342
70....48391, 49919
81....50651
132....47864
180....47874, 47877, 48617, 48620, 48626, 48634, 48637, 49922, 49924, 49927, 49936, 50431, 50438, 51544
271....48392
300....48172, 48930, 49503, 49739, 50137, 52062
302....47342
442....49666

Proposed Rules:

9....49062
51....48825
52....47363, 47705, 48652, 49527, 50669, 51564
60....52058
61....50672
63....52166
69....47706
70....49957
80....47706, 48058
86....47706, 48058
122....49062
123....49062
124....49062
125....49062
141....49638
142....49638
194....52061
232....50108
260....51080
261....48434, 50284
264....51080
266....50284
271....51080
300....47363, 48210, 49527, 49528, 49776, 50170, 51567, 52062

41 CFR

Ch. 102....48392
101....48392

Proposed Rules:

101–11....48655
102–193....48655
102–194....48655
102–195....48655

42 CFR

59....49057
70....49906
130....47348
410....47026, 47054
412....47026, 47054
413....47026, 47054, 47670
419....47670
457....52042
482....47026
485....47026, 47054

Proposed Rules:

405....50171
413....47706

43 CFR

1880....51229
3500....50446

44 CFR

Ch. I....52260
295....52260

45 CFR

160....50312
162....50312
310....50786
1351....50139

Proposed Rules:

309....50800

46 CFR

27....52043
307....47678
506....49741

Proposed Rules:

25....47936
67....49529
172....48548

47 CFR

Ch. I....50653
0....47678, 51234
1....47348, 47678, 49742, 51768
2....48174,
22....49199, 49202
54....47882, 49941
64....47678, 48393, 52047
73....48183, 48639, 50141, 50142, 50449, 50653, 51235, 51236, 51552, 51769
74....48174
78....48174
101....48174

Proposed Rules:

Ch. I....49530
1....47366, 48658
36....50172
54....47940, 49216, 50172
69....51572
73....47370, 48210, 50951, 51277, 51278, 51279, 51575, 51576, 51577
76....48211
78....48211
80....50173
90....51788

48 CFR

Ch. 15....47323
212....50143
217....50148
219....50148, 50149
222....50150
236....50148, 50151
242....50143
247....50143
252....50150, 50152
1804....50152
1807....46875
1812....50152
1819....46875
1830....49205
1852....50152

Proposed Rules:

2....50872, 52244, 52284
4....50872
5....50872
6....50872
7....50872
9....50872
12....50872, 52284
13....50872
14....50872
19....50872
22....50872
32....52244
34....50872
35....50872
36....50872
46....52284
52....52244, 52284

49 CFR

1....49763
10....48184
71....50154
107....50450
171....50450
172....50450
173....50450
174....50450
175....50450
177....50450
178....50450
179....50450
180....50450
385....50919
544....49505
553....51236
571....51769

Proposed Rules:

37....48444
172....49777
175....49777
222....46884
229....46884
243....50952
350....49780
390....49780
393....48660
394....49780
395....49780
398....49780
571....47945
575....46884

50 CFR

17....50672
20....51496
21....49508
100....51542
230....49509
622....50158, 51248
635....47214, 49941, 50162
648....46877, 47648, 49942, 50164, 40563
600....51992
679....47693, 47906, 47907, 49766, 49946, 50935, 51553, 51722

Proposed Rules:

17....49530, 49531, 49781, 49958, 51577, 51578, 51903
20....50483, 51174
100....51648
216....48669, 51584
224....49782
635....46885, 48671
648....49959
697....50952

REMINDERS

The items in this list were editorially compiled as an aid to Federal Register users. Inclusion or exclusion from this list has no legal significance.

RULES GOING INTO EFFECT AUGUST 28, 2000

AGRICULTURE DEPARTMENT

Food Safety and Inspection Service

Meat and poultry inspection:

Partial quality control programs; requirements elimination; published 5-30-00

AGRICULTURE DEPARTMENT

Freedom of Information Act; implementation; published 7-28-00

COMMERCE DEPARTMENT

National Oceanic and Atmospheric Administration

Fishery conservation and management:

Northeastern United States fisheries—

Northeast multispecies; reporting and recordkeeping requirements; published 7-14-00

ENVIRONMENTAL PROTECTION AGENCY

Superfund program:

National oil and hazardous substances contingency plan—

National priorities list update; published 7-27-00

FEDERAL COMMUNICATIONS COMMISSION

Common carrier services:

Truth-in-billing and billing format—

Principles and guidelines; effective date; published 8-28-00

Wireless telecommunications services—

Microwave facilities relocation from 1850-1990 MHz band; cost sharing plan; published 7-27-00

Radio services, special:

Private land mobile services—

220-222 MHz band; geographic partitioning and spectrum disaggregation; published 6-27-00

Radio stations; table of assignments:

Georgia; published 7-25-00

Kansas; published 7-28-00

New Mexico; published 7-25-00

Oklahoma; published 7-25-00

Utah; published 7-25-00

Wyoming; published 7-25-00

FEDERAL EMERGENCY MANAGEMENT AGENCY

Disaster assistance:

Cerro Grande fire assistance; published 8-28-00

INTERIOR DEPARTMENT

Minerals Management Service

Outer Continental Shelf; oil, gas, and sulphur operations:

Producer-operated pipelines that cross directly into State waters; published 7-27-00

TRANSPORTATION DEPARTMENT

Coast Guard

Drawbridge operations:

Louisiana; published 8-28-00

TRANSPORTATION DEPARTMENT

Federal Aviation Administration

Airworthiness directives:

Airbus; published 7-24-00

Bombardier; published 7-24-00

General Electric Co.; published 6-27-00

TREASURY DEPARTMENT

Alcohol, Tobacco and Firearms Bureau

Organization, functions, and authority delegations:

Appropriate ATF officers; published 8-28-00

COMMENTS DUE NEXT WEEK

AGRICULTURE DEPARTMENT

Agricultural Marketing Service

National Organic Program:

Reasonable security provision; comments due by 9-8-00; published 8-9-00

Pears (Bartlett) grown in—

Oregon and Washington; comments due by 9-5-00; published 7-6-00

AGRICULTURE DEPARTMENT

Animal and Plant Health Inspection Service

Animal welfare:

Pain and distress; definitions and reporting; comments due by 9-8-00; published 7-10-00

COMMERCE DEPARTMENT

National Oceanic and Atmospheric Administration

Marine mammals:

Subsistence taking; harvest estimates—

Northern fur seals; comments due by 9-8-00; published 8-9-00

DEFENSE DEPARTMENT

Defense Contract Audit Agency

Privacy Act; implementation; comments due by 9-6-00; published 8-7-00

ENVIRONMENTAL PROTECTION AGENCY

Air quality implementation plans; approval and promulgation; various States:

California; comments due by 9-8-00; published 8-9-00

Solid waste:

U.S. Filter Recovery Services; generators and transporters of USFRS XL waste; comments due by 9-7-00; published 8-17-00

Superfund program:

National oil and hazardous substances contingency plan—

National priorities list update; comments due by 9-6-00; published 8-7-00

National priorities list update; comments due by 9-6-00; published 8-7-00

Water pollution; effluent guidelines for point source categories:

Coal mining; comments due by 9-8-00; published 7-6-00

Water supply:

Underground injection control program—

Class I municipal wells in Florida; comments due by 9-5-00; published 7-7-00

FEDERAL COMMUNICATIONS COMMISSION

Common carrier services:

Tariffs—

National Exchange Carrier Association, Inc.; access tariffs participation changes; notice period shortened; comments due by 9-8-00; published 8-24-00

Digital television stations; table of assignments:

Florida; comments due by 9-5-00; published 7-17-00

Texas; comments due by 9-5-00; published 7-17-00

Radio stations; table of assignments:

Oregon; comments due by 9-5-00; published 7-25-00

Television broadcasting:

Cable television systems—

Cable Operations and Licensing Systems; electronic filing; comments due by 9-6-00; published 8-7-00

FEDERAL RESERVE SYSTEM

Bank holding companies and change in bank control (Regulation Y):

Financial holding companies, permissible activities; acting as finder; comments due by 9-5-00; published 8-3-00

HEALTH AND HUMAN SERVICES DEPARTMENT

Food and Drug Administration

Human drugs:

Sunscreen products (OTC); final monograph; comments due by 9-6-00; published 6-8-00

HEALTH AND HUMAN SERVICES DEPARTMENT

Health Care Financing Administration

Medicare:

Hospital outpatient services; prospective payment services

New or innovative medical devices, drugs, and biologicals; criteria revisions for pass-through payments, etc.; comments due by 9-5-00; published 8-3-00

HOUSING AND URBAN DEVELOPMENT DEPARTMENT

Freedom of Information Act regulations; revision; comments due by 9-8-00; published 7-10-00

Low income housing:

Housing assistance payments (Section 8)—

Tenant-based certificate and voucher programs merger into Housing Choice Voucher Program; comments due by 9-8-00; published 7-10-00

Mortgage and loan insurance programs:

Multifamily projects; prohibited purchasers in foreclosure sales; comments due by 9-5-00; published 7-5-00

INTERIOR DEPARTMENT

Fish and Wildlife Service

Endangered and threatened species:

Critical habitat designations—

Piping plover; Great Lakes breeding population; comments due by 9-5-00; published 7-6-00

Piping plover; wintering populations along Gulf and Atlantic coasts; comments due by 9-5-00; published 7-6-00

Findings on petitions, etc.—

Cape Sable seaside sparrow; comments due by 9-8-00; published 7-10-00

Migratory bird hunting:

Seasons, limits, and shooting hours; establishment, etc.; comments due by 9-8-00; published 8-22-00

LABOR DEPARTMENT

Mine Safety and Health Administration

Coal mine safety and health:

Respirable coal mine dust; concentration determination; and underground coal mine operators' dust control plans and compliance sampling for respirable dust; comments due by 9-8-00; published 8-11-00

PERSONNEL MANAGEMENT OFFICE

Prevailing rate systems; comments due by 9-8-00; published 8-9-00

POSTAL SERVICE

International Mail Manual:

Express Mail Service; five percent discount; comments due by 9-6-00; published 8-7-00

SOCIAL SECURITY ADMINISTRATION

Social security benefits and supplemental security income:

Federal old age, survivors, and disability insurance and aged, blind, and disabled—

False or misleading statement penalties; administrative procedures; comments due by 9-8-00; published 7-10-00

TRANSPORTATION DEPARTMENT

Coast Guard

Ports and waterways safety:

San Pedro Bay, CA; regulated navigation area; comments due by 9-5-00; published 7-21-00

TRANSPORTATION DEPARTMENT

Americans with Disabilities Act; implementation:

Accessibility guidelines; conforming amendments; comments due by 9-7-00; published 8-8-00

TRANSPORTATION DEPARTMENT

Federal Aviation Administration

Airworthiness directives:

Aerotechnik s.r.o.; comments due by 9-6-00; published 8-9-00

Boeing; comments due by 9-5-00; published 8-10-00

LET Aeronautical Works; comments due by 9-6-00; published 8-9-00

New Piper Aircraft, Inc.; comments due by 9-8-00; published 7-21-00

Rolls-Royce, plc; comments due by 9-5-00; published 7-7-00

Wytwornia Sprzetu; comments due by 9-8-00; published 8-21-00

Airworthiness standards:

Special conditions—

Boeing Model 747-2G4B series airplanes; comments due by 9-5-00; published 8-4-00

Class E airspace; comments due by 9-5-00; published 7-14-00

LIST OF PUBLIC LAWS

This is a continuing list of public bills from the current session of Congress which have become Federal laws. It may be used in conjunction with "P L U S" (Public Laws Update Service) on 202–523–6641. This list is also available online at http://www.nara.gov/fedreg.

The text of laws is not published in the **Federal Register** but may be ordered in "slip law" (individual pamphlet) form from the Superintendent of Documents, U.S. Government Printing Office, Washington, DC 20402 (phone, 202–512–1808). The text will also be made available on the Internet from GPO Access at http://www.access.gpo.gov/nara/index.html. Some laws may not yet be available.

H.R. 3519/P.L. 106–264

Global AIDS and Tuberculosis Relief Act of 2000 (Aug. 19, 2000; 114 Stat. 748)

Last List August 22, 2000

Public Laws Electronic Notification Service (PENS)

PENS is a free electronic mail notification service of newly enacted public laws. To subscribe, go to www.gsa.gov/archives/publaws-l.html or send E-mail to **listserv@www.gsa.gov** with the following text message:

SUBSCRIBE PUBLAWS-L Your Name.

Note: This service is strictly for E-mail notification of new laws. The text of laws is not available through this service. **PENS** cannot respond to specific inquiries sent to this address.

CFR CHECKLIST

This checklist, prepared by the Office of the Federal Register, is published weekly. It is arranged in the order of CFR titles, stock numbers, prices, and revision dates.

An asterisk (*) precedes each entry that has been issued since last week and which is now available for sale at the Government Printing Office.

A checklist of current CFR volumes comprising a complete CFR set, also appears in the latest issue of the LSA (List of CFR Sections Affected), which is revised monthly.

The CFR is available free on-line through the Government Printing Office's GPO Access Service at http://www.access.gpo.gov/nara/cfr/index.html. For information about GPO Access call the GPO User Support Team at 1-888-293-6498 (toll free) or 202-512-1530.

The annual rate for subscription to all revised paper volumes is $951.00 domestic, $237.75 additional for foreign mailing.

Mail orders to the Superintendent of Documents, Attn: New Orders, P.O. Box 371954, Pittsburgh, PA 15250–7954. All orders must be accompanied by remittance (check, money order, GPO Deposit Account, VISA, Master Card, or Discover). Charge orders may be telephoned to the GPO Order Desk, Monday through Friday, at **(202) 512–1800** from 8:00 a.m. to 4:00 p.m. eastern time, or FAX your charge orders to **(202) 512-2250**.

Title	Stock Number	Price	Revision Date
1, 2 (2 Reserved)	(869–038–00001–3)	6.50	Apr. 1, 2000
3 (1997 Compilation and Parts 100 and 101)	(869–042–00002–1)	22.00	[1] Jan. 1, 2000
4	(869–042–00003–0)	8.50	Jan. 1, 2000
5 Parts:			
1–699	(869–042–00004–8)	43.00	Jan. 1, 2000
700–1199	(869–042–00005–6)	31.00	Jan. 1, 2000
1200–End, 6 (6 Reserved)	(869–042–00006–4)	48.00	Jan. 1, 2000
7 Parts:			
1–26	(869–042–00007–2)	28.00	Jan. 1, 2000
27–52	(869–042–00008–1)	35.00	Jan. 1, 2000
53–209	(869–042–00009–9)	22.00	Jan. 1, 2000
210–299	(869–042–00010–2)	54.00	Jan. 1, 2000
300–399	(869–042–00011–1)	29.00	Jan. 1, 2000
400–699	(869–042–00012–9)	41.00	Jan. 1, 2000
700–899	(869–042–00013–7)	37.00	Jan. 1, 2000
900–999	(869–042–00014–5)	46.00	Jan. 1, 2000
1000–1199	(869–042–00015–3)	18.00	Jan. 1, 2000
1200–1599	(869–042–00016–1)	44.00	Jan. 1, 2000
1600–1899	(869–042–00017–0)	61.00	Jan. 1, 2000
1900–1939	(869–042–00018–8)	21.00	Jan. 1, 2000
1940–1949	(869–042–00019–6)	37.00	Jan. 1, 2000
1950–1999	(869–042–00020–0)	38.00	Jan. 1, 2000
2000–End	(869–042–00021–8)	31.00	Jan. 1, 2000
8	(869–042–00022–6)	41.00	Jan. 1, 2000
9 Parts:			
1–199	(869–042–00023–4)	46.00	Jan. 1, 2000
200–End	(869–042–00024–2)	44.00	Jan. 1, 2000
10 Parts:			
1–50	(869–042–00025–1)	46.00	Jan. 1, 2000
51–199	(869–042–00026–9)	38.00	Jan. 1, 2000
200–499	(869–042–00027–7)	38.00	Jan. 1, 2000
500–End	(869–042–00028–5)	48.00	Jan. 1, 2000
11	(869–042–00029–3)	23.00	Jan. 1, 2000
12 Parts:			
1–199	(869–042–00030–7)	18.00	Jan. 1, 2000
200–219	(869–042–00031–5)	22.00	Jan. 1, 2000
220–299	(869–042–00032–3)	45.00	Jan. 1, 2000
300–499	(869–042–00033–1)	29.00	Jan. 1, 2000
500–599	(869–042–00034–0)	26.00	Jan. 1, 2000
600–End	(869–042–00035–8)	53.00	Jan. 1, 2000
13	(869–042–00036–6)	35.00	Jan. 1, 2000
14 Parts:			
1–59	(869–042–00037–4)	58.00	Jan. 1, 2000
60–139	(869–042–00038–2)	46.00	Jan. 1, 2000
140–199	(869–038–00039–1)	17.00	[4] Jan. 1, 2000
200–1199	(869–042–00040–4)	29.00	Jan. 1, 2000
1200–End	(869–042–00041–2)	25.00	Jan. 1, 2000
15 Parts:			
0–299	(869–042–00042–1)	28.00	Jan. 1, 2000
300–799	(869–042–00043–9)	45.00	Jan. 1, 2000
800–End	(869–042–00044–7)	26.00	Jan. 1, 2000
16 Parts:			
0–999	(869–042–00045–5)	33.00	Jan. 1, 2000
1000–End	(869–042–00046–3)	43.00	Jan. 1, 2000
17 Parts:			
1–199	(869–042–00048–0)	32.00	Apr. 1, 2000
200–239	(869–042–00049–8)	38.00	Apr. 1, 2000
240–End	(869–042–00050–1)	49.00	Apr. 1, 2000
18 Parts:			
1–399	(869–042–00051–0)	54.00	Apr. 1, 2000
400–End	(869–042–00052–8)	15.00	Apr. 1, 2000
19 Parts:			
1–140	(869–042–00053–6)	40.00	Apr. 1, 2000
141–199	(869–042–00054–4)	40.00	Apr. 1, 2000
200–End	(869–042–00055–2)	20.00	Apr. 1, 2000
20 Parts:			
1–399	(869–042–00056–1)	33.00	Apr. 1, 2000
400–499	(869–042–00057–9)	56.00	Apr. 1, 2000
500–End	(869–042–00058–7)	58.00	[7] Apr. 1, 2000
21 Parts:			
1–99	(869–042–00059–5)	26.00	Apr. 1, 2000
100–169	(869–042–00060–9)	30.00	Apr. 1, 2000
170–199	(869–042–00061–7)	29.00	Apr. 1, 2000
200–299	(869–042–00062–5)	13.00	Apr. 1, 2000
300–499	(869–042–00063–3)	20.00	Apr. 1, 2000
500–599	(869–042–00064–1)	31.00	Apr. 1, 2000
600–799	(869–038–00065–0)	10.00	Apr. 1, 2000
800–1299	(869–042–00066–8)	38.00	Apr. 1, 2000
1300–End	(869–042–00067–6)	15.00	Apr. 1, 2000
22 Parts:			
1–299	(869–042–00068–4)	54.00	Apr. 1, 2000
300–End	(869–042–00069–2)	31.00	Apr. 1, 2000
23	(869–042–00070–6)	29.00	Apr. 1, 2000
24 Parts:			
0–199	(869–042–00071–4)	40.00	Apr. 1, 2000
200–499	(869–042–00072–2)	37.00	Apr. 1, 2000
500–699	(869–042–00073–1)	20.00	Apr. 1, 2000
700–1699	(869–042–00074–9)	46.00	Apr. 1, 2000
1700–End	(869–042–00075–7)	18.00	[5] Apr. 1, 2000
25	(869–042–00076–5)	52.00	Apr. 1, 2000
26 Parts:			
§§ 1.0-1–1.60	(869–042–00077–3)	31.00	Apr. 1, 2000
§§ 1.61–1.169	(869–042–00078–1)	56.00	Apr. 1, 2000
§§ 1.170–1.300	(869–042–00079–0)	38.00	Apr. 1, 2000
§§ 1.301–1.400	(869–042–00080–3)	29.00	Apr. 1, 2000
§§ 1.401–1.440	(869–042–00081–1)	47.00	Apr. 1, 2000
§§ 1.441-1.500	(869-042-00082-0)	36.00	Apr. 1, 2000
§§ 1.501–1.640	(869–042–00083–8)	32.00	Apr. 1, 2000
§§ 1.641–1.850	(869–042–00084–6)	41.00	Apr. 1, 2000
§§ 1.851–1.907	(869–042–00085–4)	43.00	Apr. 1, 2000
§§ 1.908–1.1000	(869–042–00086–2)	41.00	Apr. 1, 2000
§§ 1.1001–1.1400	(869–042–00087–1)	45.00	Apr. 1, 2000
§§ 1.1401–End	(869–042–00088–9)	66.00	Apr. 1, 2000
2–29	(869–042–00089–7)	45.00	Apr. 1, 2000
30–39	(869–042–00090–1)	31.00	Apr. 1, 2000
40–49	(869–042–00091–9)	18.00	Apr. 1, 2000
50–299	(869–042–00092–7)	23.00	Apr. 1, 2000
300–499	(869–042–00093–5)	43.00	Apr. 1, 2000
500–599	(869–042–00094–3)	12.00	Apr. 1, 2000
600–End	(869–042–00095–1)	12.00	Apr. 1, 2000
27 Parts:			
1–199	(869–042–00096–0)	59.00	Apr. 1, 2000

Title	Stock Number	Price	Revision Date
200–End	(869–042–00097–8)	18.00	Apr. 1, 2000
28 Parts:			
0-42	(869–038–00098–9)	39.00	July 1, 1999
43-end	(869-038-00099-7)	32.00	July 1, 1999
29 Parts:			
0–99	(869–038–00100–4)	28.00	July 1, 1999
100–499	(869–038–00101–2)	13.00	July 1, 1999
500–899	(869–038–00102–1)	40.00	[7] July 1, 1999
900–1899	(869–042–00103–6)	24.00	July 1, 2000
1900–1910 (§§ 1900 to 1910.999)	(869–042–00104–4)	46.00	[6] July 1, 2000
*1910 (§§ 1910.1000 to end)	(869–042–00105–2)	28.00	[6] July 1, 2000
1911–1925	(869–038–00106–3)	18.00	July 1, 1999
*1926	(869–042–00107–9)	30.00	[6] July 1, 2000
1927–End	(869–038–00108–0)	43.00	July 1, 1999
30 Parts:			
1–199	(869–038–00109–8)	35.00	July 1, 1999
200–699	(869–038–00110–1)	30.00	July 1, 1999
700–End	(869–038–00111–0)	35.00	July 1, 1999
31 Parts:			
0–199	(869–038–00112–8)	21.00	July 1, 1999
200–End	(869–038–00113–6)	48.00	July 1, 1999
32 Parts:			
1–39, Vol. I		15.00	[2] July 1, 1984
1–39, Vol. II		19.00	[2] July 1, 1984
1–39, Vol. III		18.00	[2] July 1, 1984
1–190	(869–038–00114–4)	46.00	July 1, 1999
191–399	(869–038–00115–2)	55.00	July 1, 1999
400–629	(869–038–00116–1)	32.00	July 1, 1999
630–699	(869–038–00117–9)	23.00	July 1, 1999
700–799	(869–038–00118–7)	27.00	July 1, 1999
800–End	(869–038–00119–5)	27.00	July 1, 1999
33 Parts:			
1–124	(869–038–00120–9)	32.00	July 1, 1999
125–199	(869–038–00121–7)	41.00	July 1, 1999
200–End	(869–038–00122–5)	33.00	July 1, 1999
34 Parts:			
1–299	(869–038–00123–3)	28.00	July 1, 1999
300–399	(869–038–00124–1)	25.00	July 1, 1999
400–End	(869–038–00125–0)	46.00	July 1, 1999
35	(869–042–00126–5)	10.00	July 1, 2000
36 Parts			
*1–199	(869–042–00127–3)	24.00	July 1, 2000
200–299	(869–038–00128–4)	23.00	July 1, 1999
300–End	(869–038–00129–2)	38.00	July 1, 1999
37	(869–038–00130–6)	29.00	July 1, 1999
38 Parts:			
0–17	(869–038–00131–4)	37.00	July 1, 1999
18–End	(869–038–00132–2)	41.00	July 1, 1999
39	(869–038–00133–1)	24.00	July 1, 1999
40 Parts:			
1–49	(869–038–00134–9)	33.00	July 1, 1999
50–51	(869–038–00135–7)	25.00	July 1, 1999
52 (52.01–52.1018)	(869–038–00136–5)	33.00	July 1, 1999
52 (52.1019–End)	(869–038–00137–3)	37.00	July 1, 1999
53–59	(869–038–00138–1)	19.00	July 1, 1999
60	(869–038–00139–0)	59.00	July 1, 1999
61–62	(869–038–00140–3)	19.00	July 1, 1999
63 (63.1–63.1119)	(869–038–00141–1)	58.00	July 1, 1999
63 (63.1200–End)	(869–038–00142–0)	36.00	July 1, 1999
64–71	(869–042–00143–5)	12.00	July 1, 2000
72–80	(869–038–00144–6)	41.00	July 1, 1999
81–85	(869–038–00145–4)	33.00	July 1, 1999
86	(869–038–00146–2)	59.00	July 1, 1999
87-135	(869–038–00146–1)	53.00	July 1, 1999
136–149	(869–038–00148–9)	40.00	July 1, 1999
150–189	(869–038–00149–7)	35.00	July 1, 1999
190–259	(869–038–00150–1)	23.00	July 1, 1999
260–265	(869–038–00151–9)	32.00	July 1, 1999
266–299	(869–038–00152–7)	33.00	July 1, 1999
300–399	(869–038–00153–5)	26.00	July 1, 1999
400–424	(869–038–00154–3)	34.00	July 1, 1999
425–699	(869–038–00155–1)	44.00	July 1, 1999
700–789	(869–038–00156–0)	42.00	July 1, 1999
*790–End	(869–042–00157–5)	23.00	[6] July 1, 2000
41 Chapters:			
1, 1–1 to 1–10		13.00	[3] July 1, 1984
1, 1–11 to Appendix, 2 (2 Reserved)		13.00	[3] July 1, 1984
3–6		14.00	[3] July 1, 1984
7		6.00	[3] July 1, 1984
8		4.50	[3] July 1, 1984
9		13.00	[3] July 1, 1984
10–17		9.50	[3] July 1, 1984
18, Vol. I, Parts 1–5		13.00	[3] July 1, 1984
18, Vol. II, Parts 6–19		13.00	[3] July 1, 1984
18, Vol. III, Parts 20–52		13.00	[3] July 1, 1984
19–100		13.00	[3] July 1, 1984
1–100	(869–038–00158–6)	14.00	July 1, 1999
101	(869–038–00159–4)	39.00	July 1, 1999
102–200	(869–038–00160–8)	16.00	July 1, 1999
201–End	(869–038–00161–6)	15.00	July 1, 1999
42 Parts:			
1–399	(869–038–00162–4)	36.00	Oct. 1, 1999
400–429	(869–038–00163–2)	44.00	Oct. 1, 1999
430–End	(869–038–00164–1)	54.00	Oct. 1, 1999
43 Parts:			
1–999	(869–038–00165–9)	32.00	Oct. 1, 1999
1000–end	(869–038–00166–7)	47.00	Oct. 1, 1999
44	(869–038–00167–5)	28.00	Oct. 1, 1999
45 Parts:			
1–199	(869–038–00168–3)	33.00	Oct. 1, 1999
200–499	(869–038–00169–1)	16.00	Oct. 1, 1999
500–1199	(869–038–00170–5)	30.00	Oct. 1, 1999
1200–End	(869–038–00171–3)	40.00	Oct. 1, 1999
46 Parts:			
1–40	(869–038–00172–1)	27.00	Oct. 1, 1999
41–69	(869–038–00173–0)	23.00	Oct. 1, 1999
70–89	(869–038–00174–8)	8.00	Oct. 1, 1999
90–139	(869–038–00175–6)	26.00	Oct. 1, 1999
140–155	(869–038–00176–4)	15.00	Oct. 1, 1999
156–165	(869–038–00177–2)	21.00	Oct. 1, 1999
166–199	(869–038–00178–1)	27.00	Oct. 1, 1999
200–499	(869–038–00179–9)	23.00	Oct. 1, 1999
500–End	(869–038–00180–2)	15.00	Oct. 1, 1999
47 Parts:			
0–19	(869–038–00181–1)	39.00	Oct. 1, 1999
20–39	(869–038–00182–9)	26.00	Oct. 1, 1999
40–69	(869–038–00183–7)	26.00	Oct. 1, 1999
70–79	(869–038–00184–5)	39.00	Oct. 1, 1999
80–End	(869–038–00185–3)	40.00	Oct. 1, 1999
48 Chapters:			
1 (Parts 1–51)	(869–038–00186–1)	55.00	Oct. 1, 1999
1 (Parts 52–99)	(869–038–00187–0)	30.00	Oct. 1, 1999
2 (Parts 201–299)	(869–038–00188–8)	36.00	Oct. 1, 1999
3–6	(869–038–00189–6)	27.00	Oct. 1, 1999
7–14	(869–038–00190–0)	35.00	Oct. 1, 1999
15–28	(869–038–00191–8)	36.00	Oct. 1, 1999
29–End	(869–038–00192–6)	25.00	Oct. 1, 1999
49 Parts:			
1–99	(869–038–00193–4)	34.00	Oct. 1, 1999
100–185	(869–038–00194–2)	53.00	Oct. 1, 1999
186–199	(869–038–00195–1)	13.00	Oct. 1, 1999
200–399	(869–038–00196–9)	53.00	Oct. 1, 1999
400–999	(869–038–00197–7)	57.00	Oct. 1, 1999
1000–1199	(869–038–00198–5)	17.00	Oct. 1, 1999
1200–End	(869–038–00199–3)	14.00	Oct. 1, 1999
50 Parts:			
1–199	(869–038–00200–1)	43.00	Oct. 1, 1999
200–599	(869–038–00201–9)	22.00	Oct. 1, 1999

Title	Stock Number	Price	Revision Date
600–End	(869–038–00202–7)	37.00	Oct. 1, 1999
CFR Index and Findings Aids	(869–042–00047–1)	53.00	Jan. 1, 2000
Complete 1999 CFR set		951.00	1999
Microfiche CFR Edition:			
Subscription (mailed as issued)		290.00	1999
Individual copies		1.00	1999
Complete set (one-time mailing)		247.00	1997
Complete set (one-time mailing)		264.00	1996

[1] Because Title 3 is an annual compilation, this volume and all previous volumes should be retained as a permanent reference source.

[2] The July 1, 1985 edition of 32 CFR Parts 1–189 contains a note only for Parts 1–39 inclusive. For the full text of the Defense Acquisition Regulations in Parts 1–39, consult the three CFR volumes issued as of July 1, 1984, containing those parts.

[3] The July 1, 1985 edition of 41 CFR Chapters 1–100 contains a note only for Chapters 1 to 49 inclusive. For the full text of procurement regulations in Chapters 1 to 49, consult the eleven CFR volumes issued as of July 1, 1984 containing those chapters.

[4] No amendments to this volume were promulgated during the period January 1, 1999, through January 1, 2000. The CFR volume issued as of January 1, 1999 should be retained.

[5] No amendments to this volume were promulgated during the period April 1, 1999, through April 1, 2000. The CFR volume issued as of April 1, 1999 should be retained.

[6] No amendments to this volume were promulgated during the period July 1, 1999, through July 1, 2000. The CFR volume issued as of July 1, 1999 should be retained.

[7] No amendments to this volume were promulgated during the period July 1, 1998, through July 1, 1999. The CFR volume issued as of July 1, 1998, should be retained.